FRONT LIGHTS FOR SIDEWALKS, TRAILS OR PATHS							
SIG #	LIGHT #	ROUNDEL		ROAD SPEED	MINIMUM DISTANCE	RECOMMENDED DISTANCE	ALIGNMENT DISTANCE
		SIZE	TYPE	MPH	FT	FT	FT
A	1,2	12"	LED	N/A	N/A	N/A	100
B	7,8	12"	LED	N/A	N/A	N/A	100

CONTENT	SHEET NO.
INDEX	01
TRACK AND CIRCUIT DIAGRAM	02
UNIT 1-2 HXP3 CROSSING UNIT	03
UNIT 3-4 HXP3 CROSSING UNIT	04
UNIT 5-6 HXP3 CROSSING UNIT	05
FLASHING LIGHT SIGNALS	06
BUSS DETAIL - SIDE "A" & "C"	07
POWER DISTRIBUTION	08
HOUSE LAYOUT - "A"	09
HOUSE LAYOUT - "C"	10
TERMINAL BOARD LAYOUT	11
6' X 6' HOUSE LAYOUT	12
PROPOSED PED. CROSSING LAYOUT	13
EQUIPMENT SETUP INFORMATION	14
EQUIPMENT SETUP INFORMATION	15
EQUIPMENT SETUP INFORMATION	16

wau-019.75-01.dgn
06-MAY-2015

REVISIONS

NO.	DATE	BY	DESCRIPTION	APP. BY
1				
2				
3				
4				
5				

SIEMENS INDUSTRY INC

DES. : NAD	DATE: 21/01/15	JOB NO.: PWCA10408	
CKD. : MRB	ISSUE DATE: N/A	EST. NO.: XP-7628	
DRN. : NAD	PLAN NO.: N/A	SHEET 1 OF 16	
P TIME: 13:54	P DATE: $$PLOT_DATE	CAD ID.: WAU-019.75-01	

SII 21 JAN 2015

PROPOSED
DESIGN NO. 15-0066
RED-IN YELLOW-OUT

AS INSTALLED
DATE _____
BY _____
(PRINT NAME)

PROPOSED D	PROPOSED M	PROPOSED Y	REVISIONS	D	C	COMPLETED D	COMPLETED M	COMPLETED Y	C

REGION SOUTHERN
SUB. WAUKESHA 435

SIGNALS AND COMMUNICATIONS HOMEWOOD
21 JANUARY 2015
DES. NAD
CH. MRB

INDEX

ROSEMONT, IL
O'HARE PED

WAU-019.75-01

16

DOT# 840 452D

SIEMENS INDUSTRY INC
LOUISVILLE DIVISION, LOUISVILLE, KY

REVISIONS			
NO.	DATE	BY	DESCRIPTION	APP. BY
1				
2				
3				
4				
5				

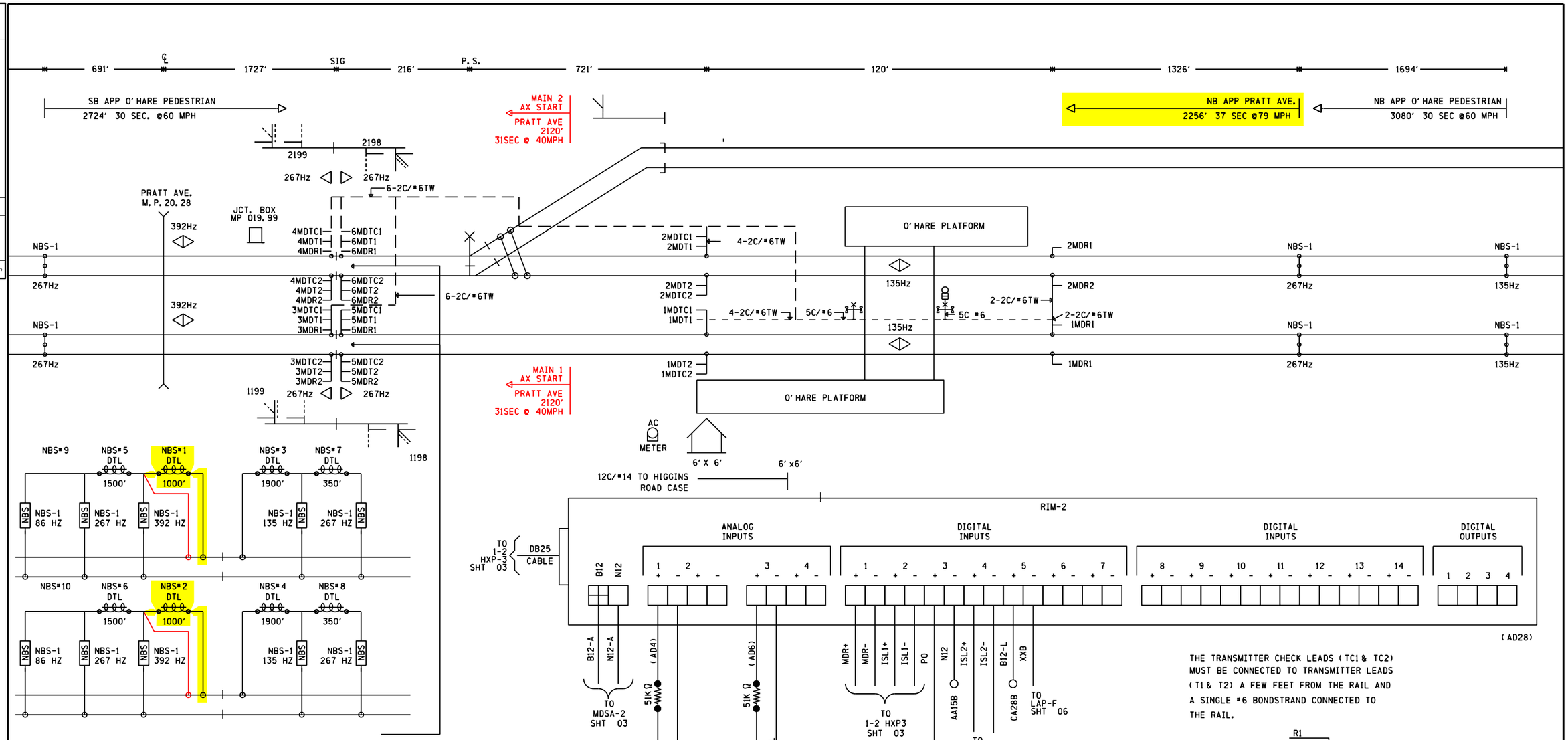

NBS
- #1 TERMINATION SHUNT FOR PRATT AVENUE TRACK 1
- #2 TERMINATION SHUNT FOR PRATT AVENUE TRACK 2
- #3 TERMINATION SHUNT FOR O'HARE PEDESTRIAN TRACK 1
- #4 TERMINATION SHUNT FOR O'HARE PEDESTRIAN TRACK 2
- #5 BIDIRECTIONAL SIMULATION FOR O'HARE PEDESTRAIN TRACK 1
- #6 BIDIRECTIONAL SIMULATION FOR O'HARE PEDESTRAIN TRACK 2
- #7 BIDIRECTIONAL SIMULATION FOR O'HARE PEDESTRAIN TRACK 1
- #8 BIDIRECTIONAL SIMULATION FOR O'HARE PEDESTRAIN TRACK 2
- #9 BIDIRECTIONAL SIMULATION FOR TOUHY TRACK 1
- #10 BIDIRECTIONAL SIMULATION FOR TOUHY TRACK 2

SII 21 JAN 2015

PROPOSED
DESIGN NO. 15-0066
RED-IN YELLOW-OUT

AS INSTALLED
DATE _____
BY _____
(PRINT NAME)

PROPOSED D	M	Y	REVISIONS	D	C	COMPLETED D	M	Y	C
			PLAN REDRAWN			21	01	15	NAD
21	01	15	PRATT 40MPH REV	NAD	MRB				

REGION SOUTHERN
SUB. WAUKESHA 435

SIGNALS AND COMMUNICATIONS HOMEWOOD
15 JANUARY 2003
DES. GETS
CH. FAP

TRACK AND CIRCUIT DIAGRAM

ROSEMONT, IL
O'HARE PED

WAU-019.75-02

DOT# 840 452D

SIEMENS INDUSTRY INC

DES.: NAD	DATE: 21/01/15	JOB NO.: PWCA10408	
CKD.: MRB	ISSUE DATE: N/A	EST. NO.: XP-7628	
DRN.: NAD	PLAN NO.: N/A	SHEET 2 OF 16	
P TIME: 13:54	P DATE: $$PLOT_DATE	CAD ID.: WAU-019.75-02	

SIEMENS INDUSTRY INC
LOUISVILLE DIVISION, LOUISVILLE, KY

wau-019.75-02.dgn
06-MAY-2015

REVISIONS				
NO.	DATE	BY	DESCRIPTION	APP. BY
1				
2				
3				
4				
5				

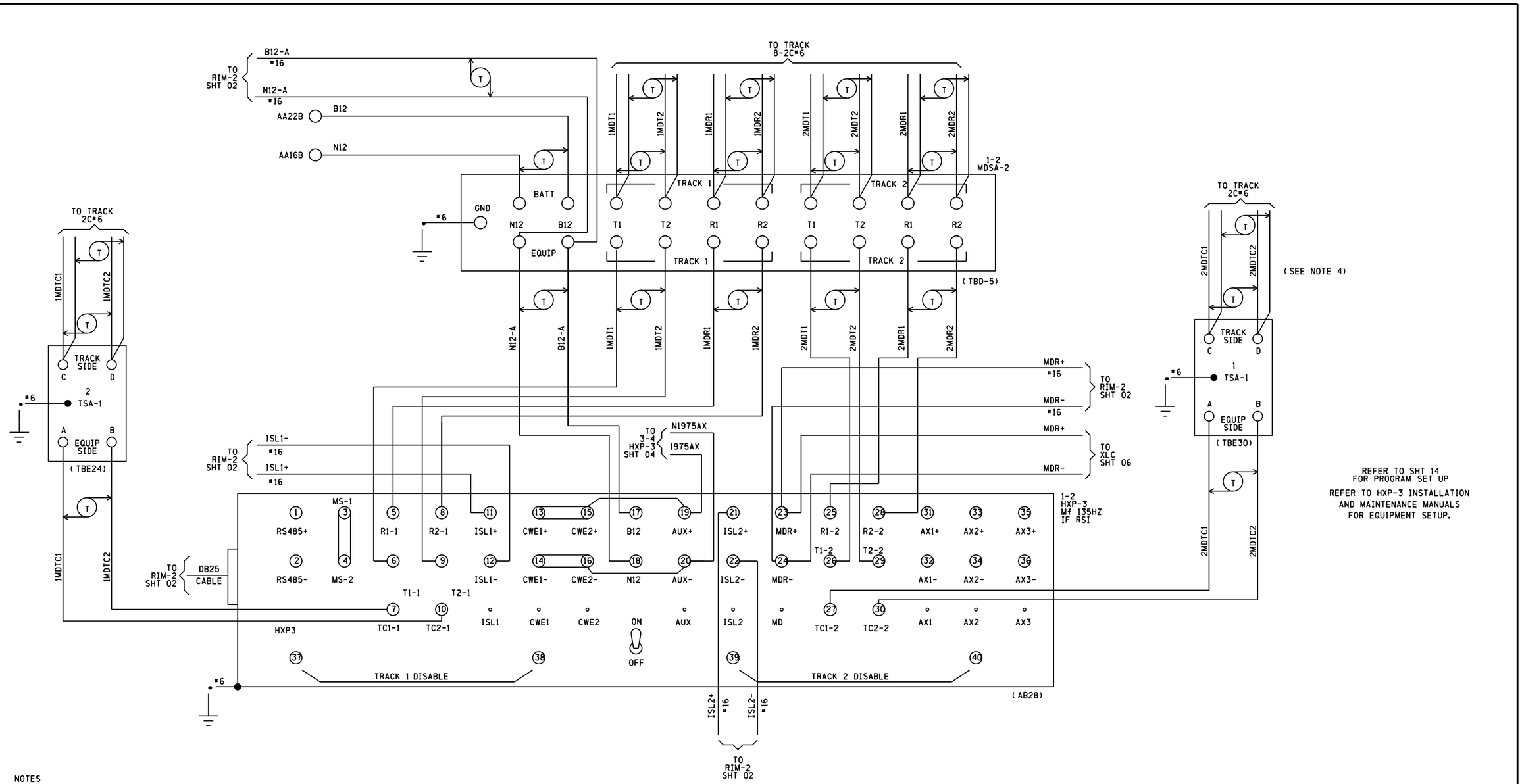

NOTES

1) ALL WIRE THIS SHEET TO BE #10 AWG FLEX UNLESS OTHERWISE NOTED.

2) (T) TWISTED PAIR 2 TURNS PER FOOT

3) • EQUIPMENT GROUND LEADS TO BE WIRED DIRECTLY TO THE 2" COPPER BAR KEEPING LEAD WIRE AS SHORT AS POSSIBLE.

4) TRANSMITTER CHECK LEADS (TC1&TC2) MUST BE CONNECTED TO TRANSMITTER LEADS (T1&T2) A FEW FEET FROM THE RAIL AND A SINGLE #6 BONDSTRAND CONNECTED TO RAIL

5) ALL TRACK WIRE DOUBLED FOR THIS BOX.

SIEMENS INDUSTRY INC			
DES. : NAD	DATE: 21/01/15	JOB NO. : PWCA10408	
CKD. : MRB	ISSUE DATE: N/A	EST. NO. : XP-7628	
DRN. : NAD	PLAN NO. : N/A	SHEET 3 OF 16	
P TIME: 13:54	P DATE: $$PLOT_DATE	CAD ID. : WAU-019.75-03	

PROPOSED			REVISIONS	D	C	COMPLETED			C
D	M	Y				D	M	Y	
			PLAN REDRAWN			21	01	15	NAD

REGION SOUTHERN

SUB. WAUKESHA 435

SIGNALS AND COMMUNICATIONS HOMEWOOD

15 JANUARY 2003

DES. GETS

CH. FAP

UNIT 1-2 HXP3 CROSSING UNIT

ROSEMONT, IL

O'HARE PED

WAU-019.75-03

DOT# 840 452D

SIEMENS INDUSTRY INC
LOUISVILLE DIVISION, LOUISVILLE, KY

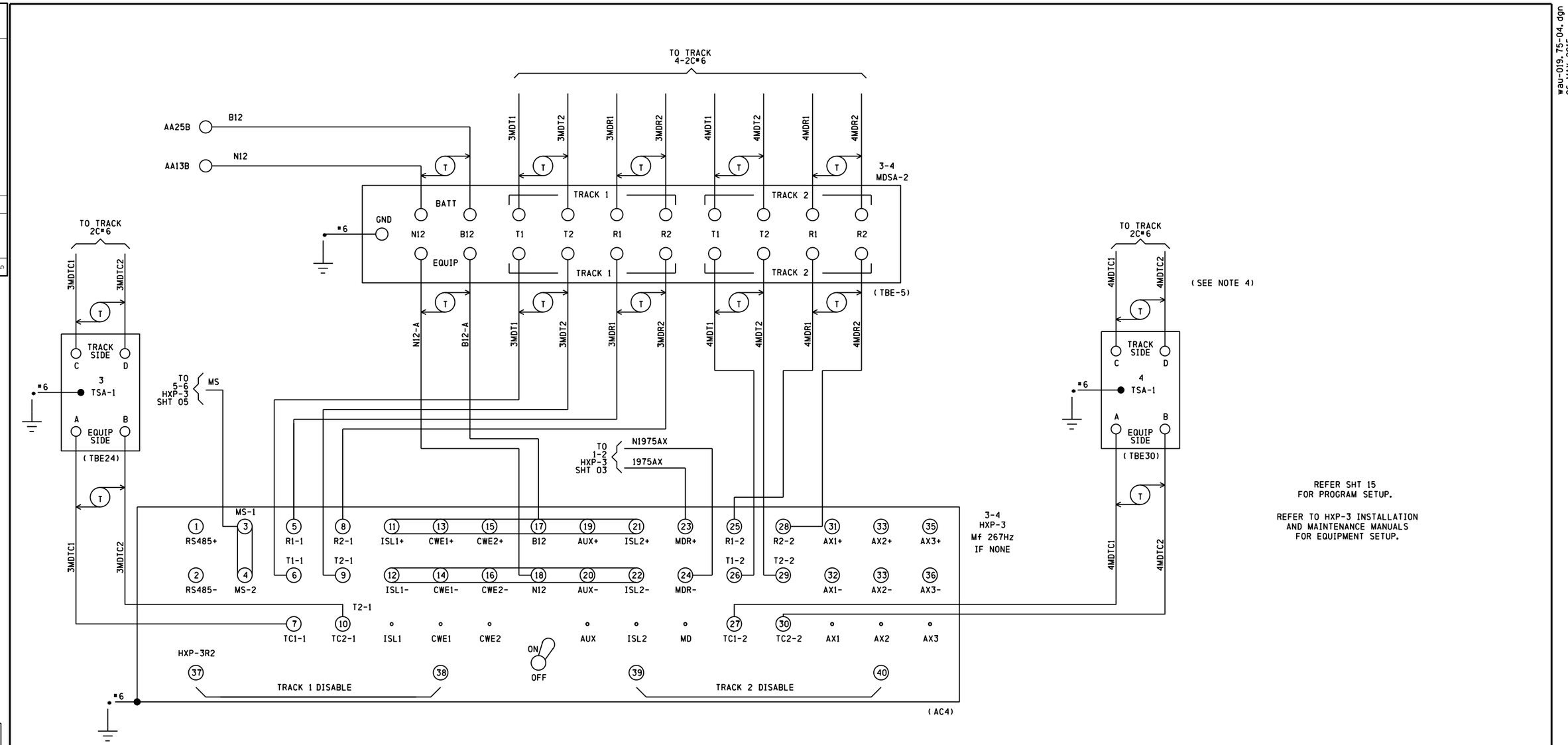

NOTES

1) ALL WIRE THIS SHEET TO BE #10 AWG FLEX UNLESS OTHERWISE NOTED.

2) (T) TWISTED PAIR 2 TURNS PER FOOT

3) • EQUIPMENT GROUND LEADS TO BE WIRED DIRECTLY TO THE 2" COPPER BAR KEEPING LEAD WIRE AS SHORT AS POSSIBLE.

4) TRANSMITTER CHECK LEADS (TC1&TC2) MUST BE CONNECTED TO TRANSMITTER LEADS (T1&T2) A FEW FEET FROM THE RAIL AND A SINGLE #6 BONDSTRAND CONNECTED TO RAIL

REVISIONS				
NO.	DATE	BY	DESCRIPTION	APP. BY
1				
2				
3				
4				
5				

wau-019.75-04.dgn
06-MAY-2015

SIEMENS INDUSTRY INC

DES.: NAD	DATE: 21/01/15	JOB NO.: PWCA10408	
CKD.: MRB	ISSUE DATE: N/A	EST. NO.: XP-7628	
DRN.: NAD	PLAN NO.: N/A	SHEET 4 OF 16	
P TIME: 13:54	P DATE: $$PLOT_DATE	CAD ID.: WAU-019.75-04	

PROPOSED			REVISIONS	D	C	COMPLETED			C
D	M	Y				D	M	Y	
			PLAN REDRAWN			21	01	15	NAD

REGION SOUTHERN
SUB. WAUKESHA 435

SIGNALS AND COMMUNICATIONS HOMEWOOD
15 JANUARY 2003
DES. GETS
CH. FAP

UNIT 3-4 HXP3 CROSSING UNIT

ROSEMONT, IL
O'HARE PED

WAU-019.75-04

DOT# 840 452D

SIEMENS INDUSTRY INC
LOUISVILLE DIVISION, LOUISVILLE, KY

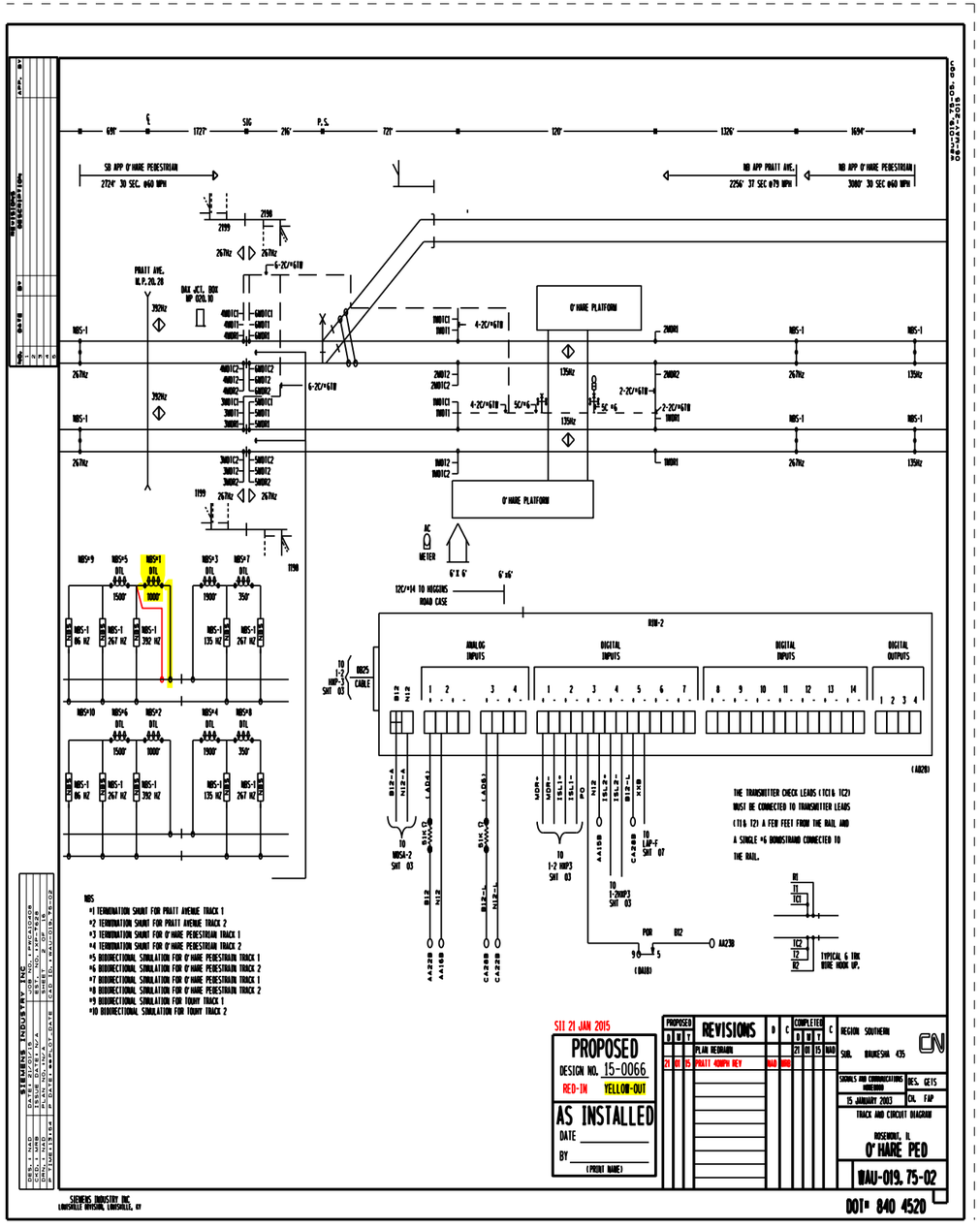
SB APP O'HARE PEDESTRIAN
2724' 30 SEC. 060 MPH
NB APP PRATT AVE.
2256' 37 SEC 079 MPH
NB APP O'HARE PEDESTRIAN
3000' 30 SEC 060 MPH
PRATT AVE.
M.P. 20.20
O'HARE PLATFORM
O'HARE PLATFORM
METER
12C#14 TO HIGGINS ROAD CASE
RIM-2
ANALOG INPUTS
DIGITAL INPUTS
DIGITAL INPUTS
DIGITAL OUTPUTS
TO 1-2 HMP3 SHT 03
HUB25 CABLE
TO MDSA-2 SHT 03
TO 1-2 HMP3 SHT 03
TO 1-2MP3 SHT 03
TO LOP-F SHT 07
THE TRANSMITTER CHECK LEADS (TC1& TC2) MUST BE CONNECTED TO TRANSMITTER LEADS (TT1& T2) A FEW FEET FROM THE RAIL AND A SINGLE #6 BONDSTRAND CONNECTED TO THE RAIL.
TYPICAL 6 TRK BUNE HOOK UP.
(BAUD)
(AA28)
NOTES
#1 TERMINATION SHUNT FOR PRATT AVENUE TRACK 1
#2 TERMINATION SHUNT FOR PRATT AVENUE TRACK 2
#3 TERMINATION SHUNT FOR O'HARE PEDESTRIAN TRACK 1
#4 TERMINATION SHUNT FOR O'HARE PEDESTRIAN TRACK 2
#5 BIDIRECTIONAL SIMULATION FOR O'HARE PEDESTRIAN TRACK 1
#6 BIDIRECTIONAL SIMULATION FOR O'HARE PEDESTRIAN TRACK 2
#7 BIDIRECTIONAL SIMULATION FOR O'HARE PEDESTRIAN TRACK 1
#8 BIDIRECTIONAL SIMULATION FOR O'HARE PEDESTRIAN TRACK 2
#9 BIDIRECTIONAL SIMULATION FOR FOURY TRACK 1
#10 BIDIRECTIONAL SIMULATION FOR FOURY TRACK 2
SII 21 JAN 2015
PROPOSED
DESIGN NO. 15-0066
RED-IN YELLOW-OUT
AS INSTALLED
DATE
BY
(PRINT NAME)
REVISIONS
PLAN REDRAWN
PRATT 40MPH REV
REGION SOUTHERN
SUB. BRAIDESHA 435
SIGNALS AND COMMUNICATIONS HIGHWAY
15 JANUARY 2003
DES. GEIS
CK. FAP
TRACK AND CIRCUIT DIAGRAM
ROSEMONT, IL
O'HARE PED
WAU-019.75-02
DOT# 840 4520
SIEMENS INDUSTRY INC
LOUISVILLE DIVISION, LOUISVILLE, KY

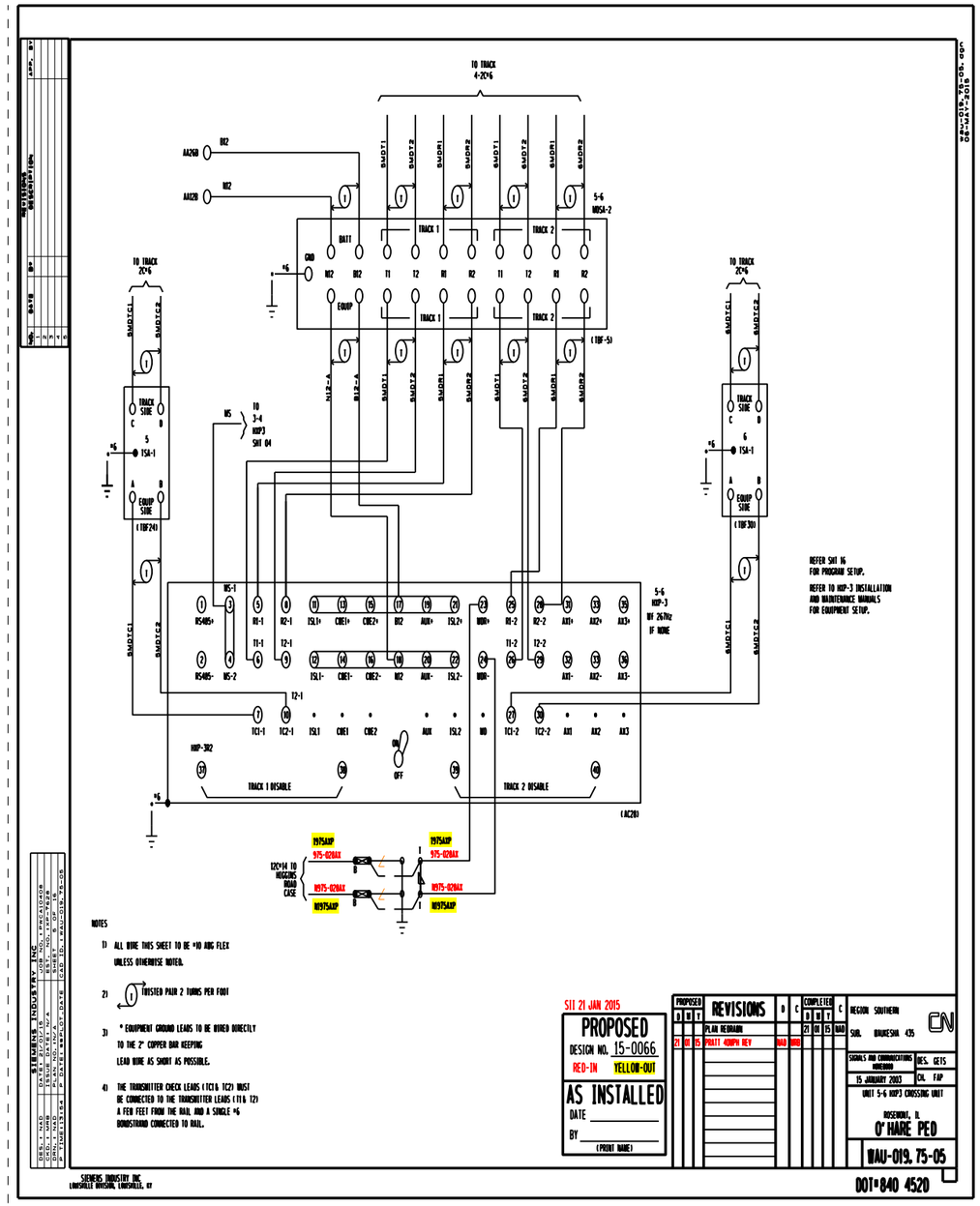
TO TRACK 4-2C#6
TO TRACK 2C#6
TO TRACK 2C#6
TRACK 1
TRACK 2
TRACK 1
TRACK 2
TO 3-4 HMP3 SHT 04
HMP-3 BY 26Hz IF NONE
TRACK 1 DISABLE
TRACK 2 DISABLE
12C#14 TO HIGGINS ROAD CASE
NOTES
1) ALL WIRE THIS SHEET TO BE #10 AWG FLEX UNLESS OTHERWISE NOTED.
2) TWISTED PAIR 2 TURNS PER FOOT
3) * EQUIPMENT GROUND LEADS TO BE WIRED DIRECTLY TO THE 2" COPPER BAR KEEPING LEAD WIRE AS SHORT AS POSSIBLE.
4) THE TRANSMITTER CHECK LEADS (TC1& TC2) MUST BE CONNECTED TO THE TRANSMITTER LEADS (TT1& T2) A FEW FEET FROM THE RAIL AND A SINGLE #6 BONDSTRAND CONNECTED TO RAIL.
REFER SHT 16 FOR PROGRAM SETUP.
REFER TO HMP-3 INSTALLATION AND MAINTENANCE MANUALS FOR EQUIPMENT SETUP.
SII 21 JAN 2015
PROPOSED
DESIGN NO. 15-0066
RED-IN YELLOW-OUT
AS INSTALLED
DATE
BY
(PRINT NAME)
REVISIONS
PLAN REDRAWN
PRATT 40MPH REV
REGION SOUTHERN
SUB. BRAIDESHA 435
SIGNALS AND COMMUNICATIONS HIGHWAY
15 JANUARY 2003
DES. GEIS
CK. FAP
UNIT 5-6 HMP3 CROSSING UNIT
ROSEMONT, IL
O'HARE PED
WAU-019.75-05
DOT# 840 4520
SIEMENS INDUSTRY INC
LOUISVILLE DIVISION, LOUISVILLE, KY

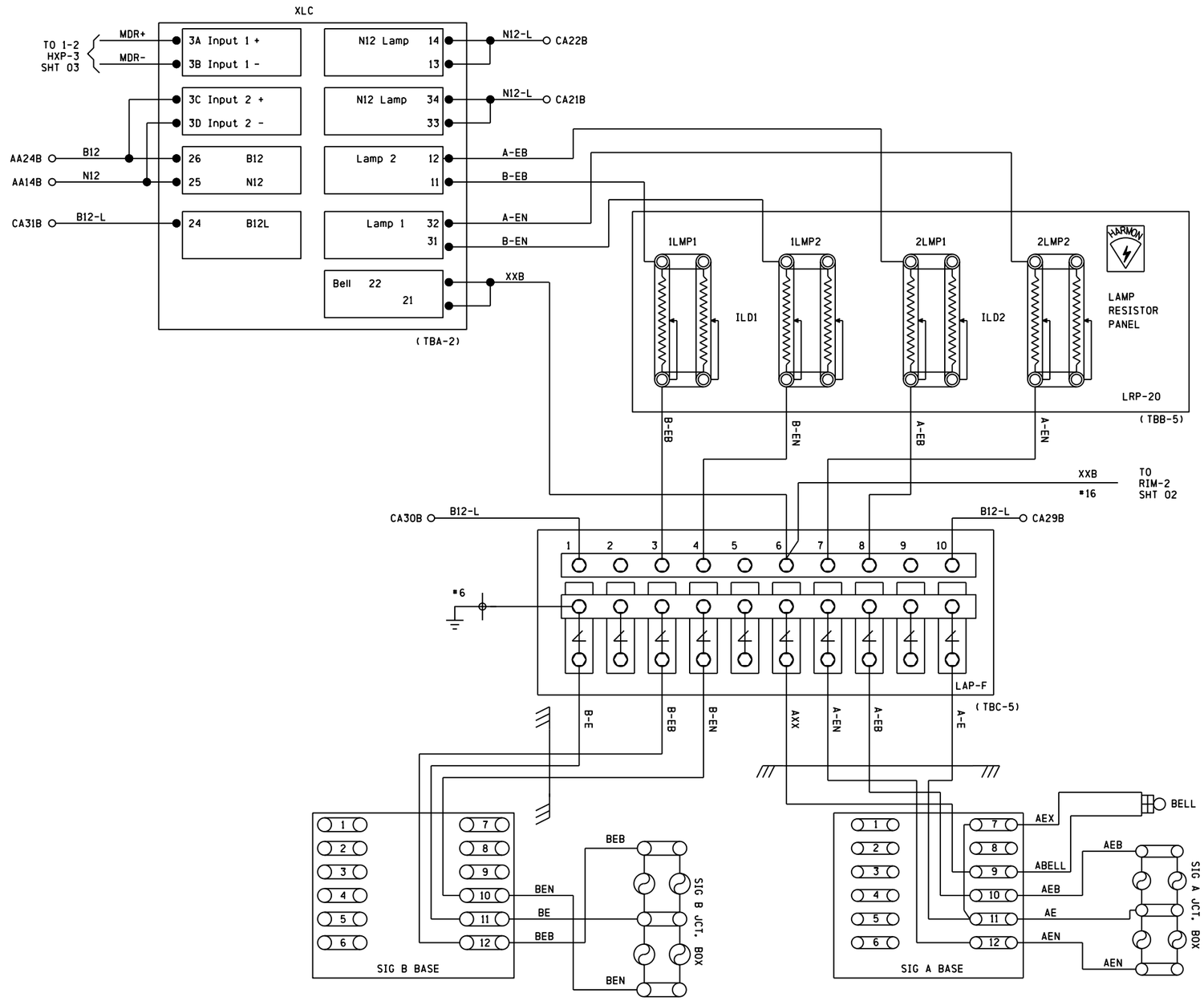

NOTE
1) ALL WIRE ON THIS PAGE TO BE
*10 AWG UNLESS OTHERWISE NOTED.

REVISIONS			
NO.	DATE	BY	DESCRIPTION	APP. BY
1				
2				
3				
4				
5				

SIEMENS INDUSTRY INC			
DES.: NAD	DATE: 21/01/15	JOB NO.: PWCA10408	
CKD.: MRB	ISSUE DATE: N/A	EST. NO.: XP-7628	
DRN.: NAD	PLAN NO.: N/A	SHEET 6 OF 16	
P TIME: 13:54	P DATE: $$PLOT_DATE	CAD ID.: WAU-019.75-06	

PROPOSED D	M	Y	REVISIONS	D	C	COMPLETED D	M	Y	C
			PLAN REDRAWN			21	01	15	NAD

REGION SOUTHERN
SUB. WAUKESHA 435
SIGNALS AND COMMUNICATIONS HOMEWOOD
15 JANUARY 2003
DES. GETS
CH. FAP
FLASHING LIGHT SIGNALS
ROSEMONT, IL
O'HARE PED
WAU-019.75-06
DOT# 840 452D

wau-019.75-06.dgn
06-MAY-2015

SIEMENS INDUSTRY INC
LOUISVILLE DIVISION, LOUISVILLE, KY

REVISIONS				
NO.	DATE	BY	DESCRIPTION	APP. BY
1				
2				
3				
4				
5				

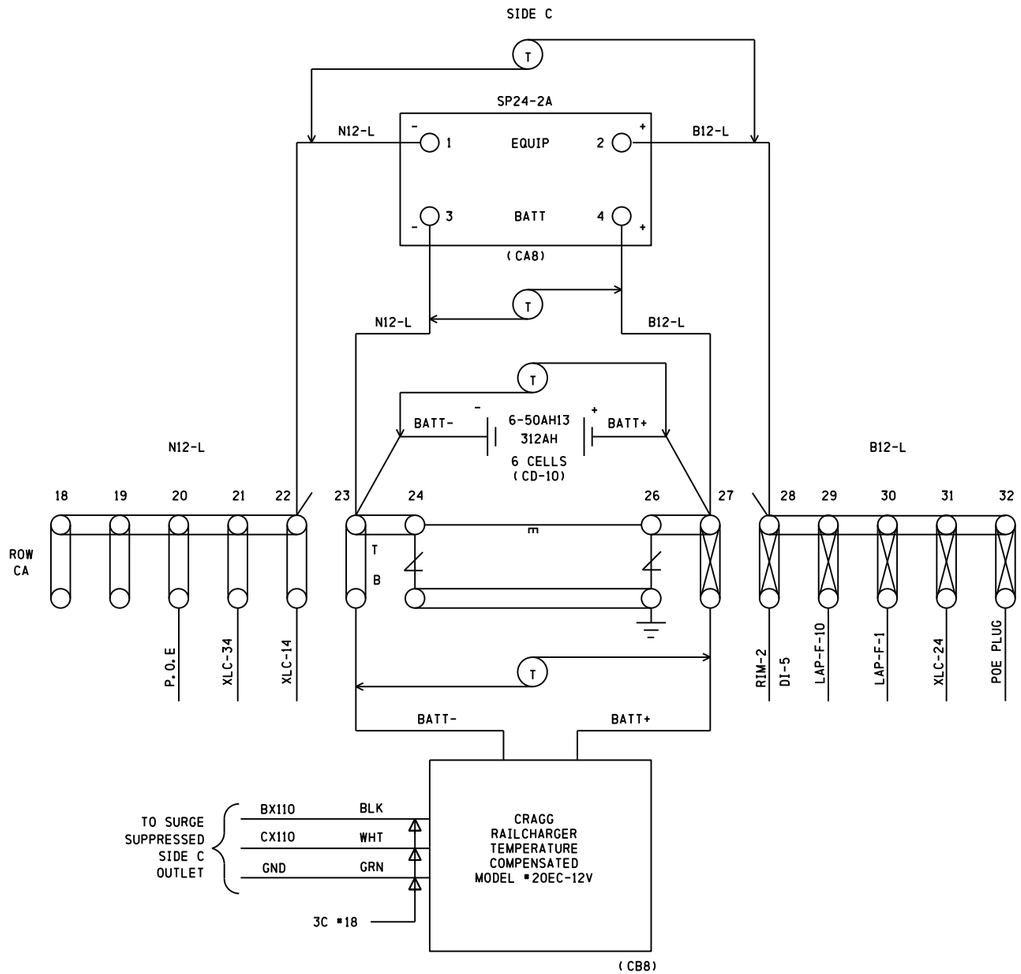

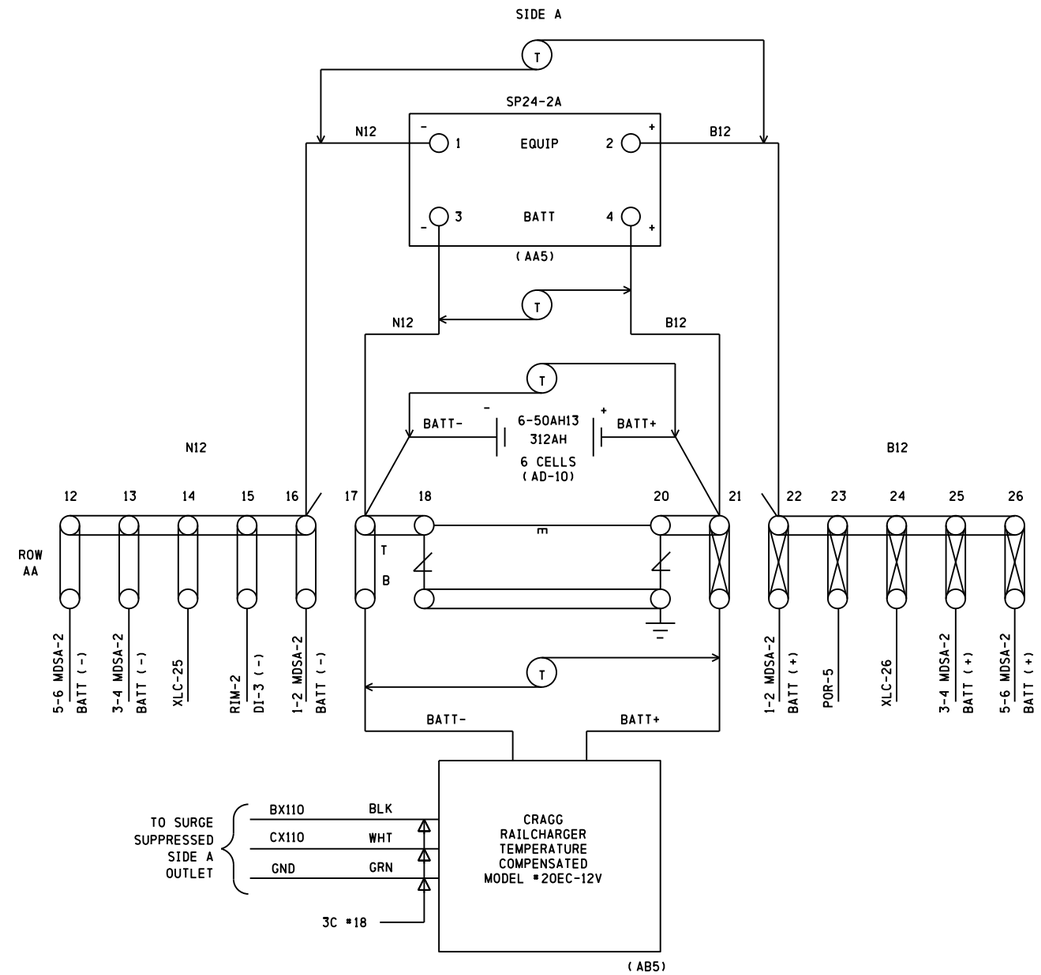

NOTE

1) ALL WIRING THIS SHEET #6 AWG UNLESS OTHERWISE NOTED.

PROPOSED D	M	Y	REVISIONS	D	C	COMPLETED D	M	Y	C
			PLAN REDRAWN			21	01	15	NAD

REGION SOUTHERN
SUB. WAUKESHA 435

SIGNALS AND COMMUNICATIONS HOMEWOOD
15 JANUARY 2003
DES. GETS
CH. FAP

BUSS DETAIL - SIDE "A" & "C"

ROSEMONT, IL
O'HARE PED

WAU-019.75-07

DOT# 840 452D

wau-019.75-07.dgn
06-MAY-2015

SIEMENS INDUSTRY INC

DES.: NAD	DATE: 21/01/15	JOB NO.: PWCA10408	
CKD.: MRB	ISSUE DATE: N/A	EST. NO.: XP-7628	
DRN.: NAD	PLAN NO.: N/A	SHEET 7 OF 16	
P TIME: 13:54	P DATE: $$PLOT_DATE	CAD ID.: WAU-019.75-07	

SIEMENS INDUSTRY INC
LOUISVILLE DIVISION, LOUISVILLE, KY

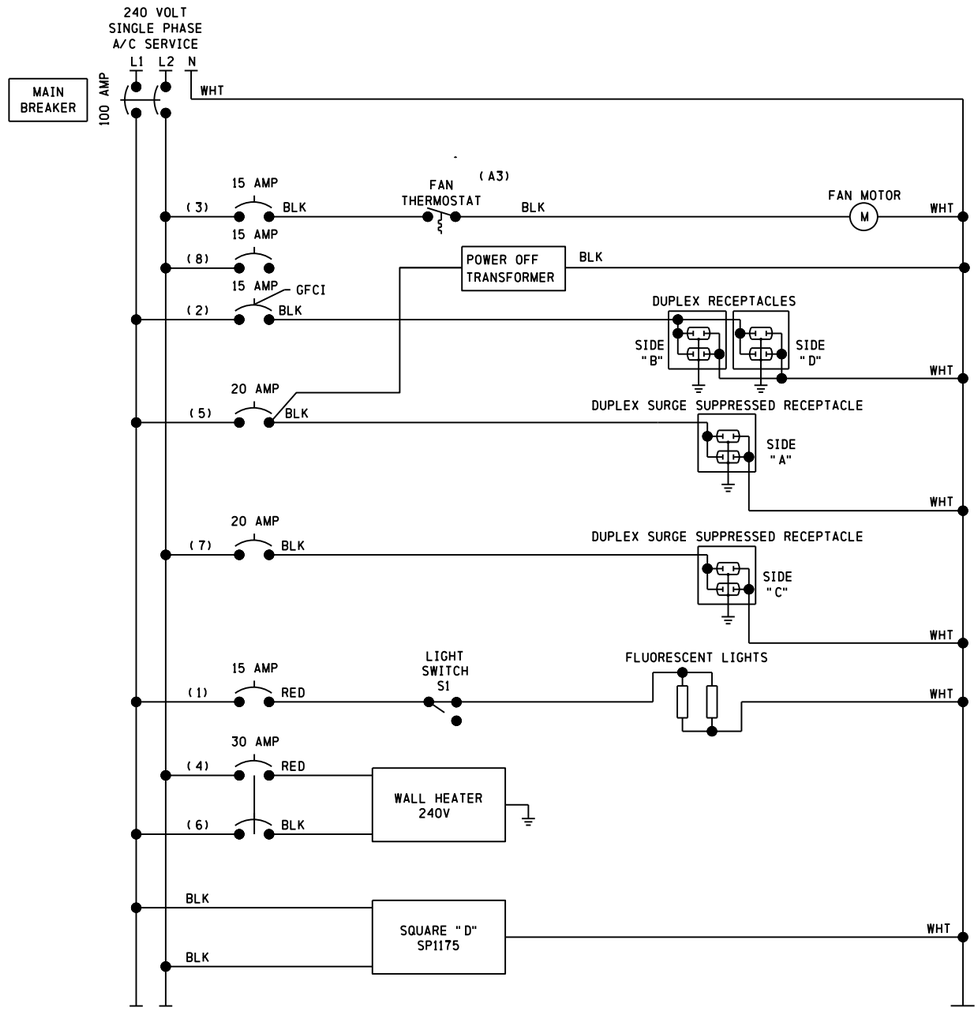

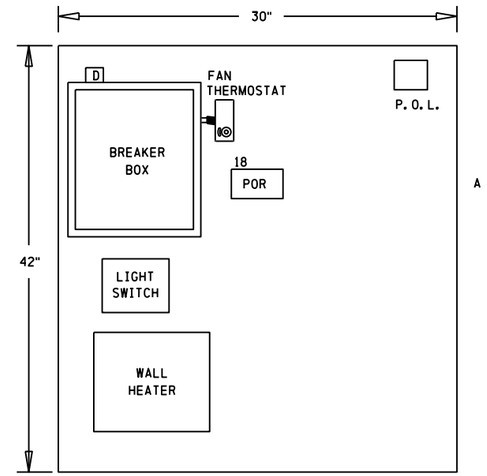

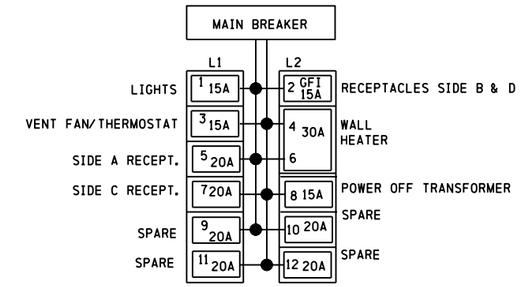

BREAKER POSITIONS

NOTE
1) INSTALL 20A BREAKERS IN SPARE POSITION.

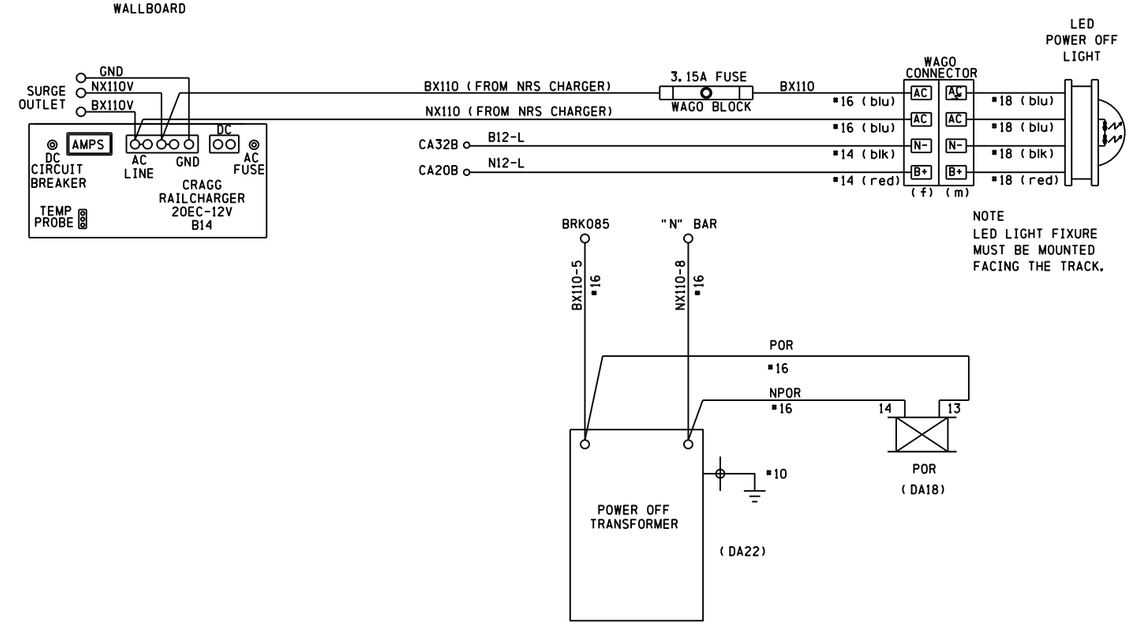

NOTE
LED LIGHT FIXURE MUST BE MOUNTED FACING THE TRACK.

REVISIONS			
NO.	DATE	BY	APP. BY
1			
2			
3			
4			
5			

SIEMENS INDUSTRY INC	
DES.: NAD	DATE: 21/01/15
CKD.: MRB	ISSUE DATE: N/A
DRN.: NAD	PLAN NO.: N/A
P. TIME: 13:54	P. DATE: $$PLOT_DATE
	JOB NO.: PWCA10408
	EST. NO.: XP-7628
	SHEET 8 OF 16
	CAD ID.: WAU-019.75-08

PROPOSED D	M	Y	REVISIONS	D	C	COMPLETED D	M	Y	C
			PLAN REDRAWN			21	01	15	NAD

REGION SOUTHERN
SUB. WAUKESHA 435

SIGNALS AND COMMUNICATIONS HOMEWOOD
15 JANUARY 2003
DES. GETS
CH. FAP

POWER DISTRIBUTION
ROSEMONT, IL
O'HARE PED

WAU-019.75-08

DOT# 840 452D

SIEMENS INDUSTRY INC
LOUISVILLE DIVISION, LOUISVILLE, KY

wau-019.75-08.dgn
06-MAY-2015

REVISIONS				
NO.	DATE	BY	DESCRIPTION	APP. BY
1				
2				
3				
4				
5				

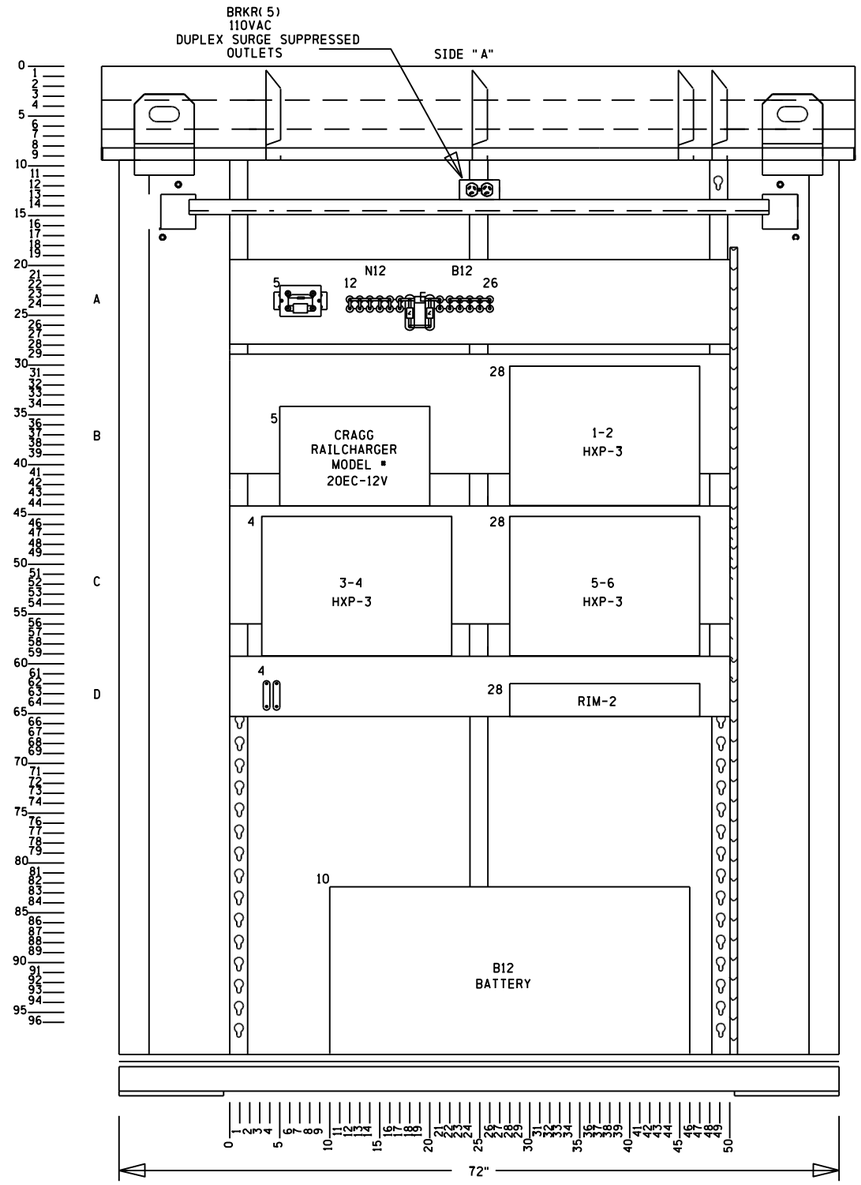

SIEMENS INDUSTRY INC			
DES. : NAD	DATE: 21/01/15	JOB NO.: PWCA10408	
CKD. : MRB	ISSUE DATE: N/A	EST. NO.: XP-7628	
DRN. : NAD	PLAN NO.: N/A	SHEET 9 OF 16	
P TIME: 13:54	P DATE: $$PLOT_DATE	CAD ID.: WAU-019.75-09	

PROPOSED			REVISIONS	D	C	COMPLETED			C
D	M	Y				D	M	Y	
			PLAN REDRAWN			21	01	15	NAD

REGION SOUTHERN
SUB. WAUKESHA 435

SIGNALS AND COMMUNICATIONS HOMEWOOD
15 JANUARY 2003
DES. GETS
CH. FAP

HOUSE LAYOUT - "A"

ROSEMONT, IL
O'HARE PED

WAU-019.75-09

DOT# 840 452D

SIEMENS INDUSTRY INC
LOUISVILLE DIVISION, LOUISVILLE, KY

wau-019.75-09.dgn
06-MAY-2015

REVISIONS				
NO.	DATE	BY	DESCRIPTION	APP. BY
1				
2				
3				
4				
5				

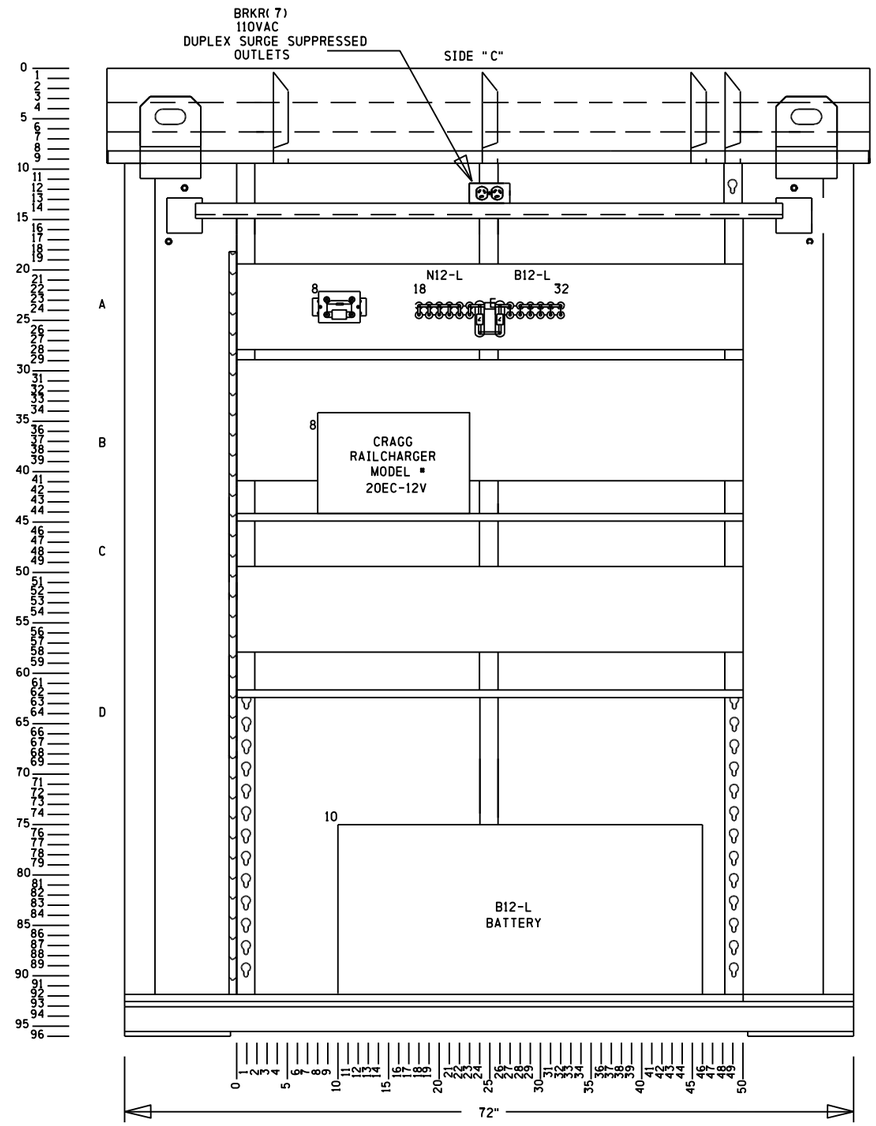

wau-019.75-10.dgn
06-MAY-2015

SIEMENS INDUSTRY INC			
DES.: NAD	DATE: 21/01/15	JOB NO.: PWCA10408	
CKD.: MRB	ISSUE DATE: N/A	EST. NO.: XP-7628	
DRN.: NAD	PLAN NO.: N/A	SHEET 10 OF 16	
P TIME: 13:55	P DATE: $$PLOT_DATE	CAD ID.: WAU-019.75-10	

PROPOSED			REVISIONS	D	C	COMPLETED			C
D	M	Y				D	M	Y	
			PLAN REDRAWN			21	01	15	NAD

REGION SOUTHERN
SUB. WAUKESHA 435

SIGNALS AND COMMUNICATIONS HOMEWOOD
15 JANUARY 2003
DES. GETS
CH. FAP

HOUSE LAYOUT - "C"

ROSEMONT, IL
O'HARE PED

WAU-019.75-10

DOT# 840 452D

SIEMENS INDUSTRY INC
LOUISVILLE DIVISION, LOUISVILLE, KY

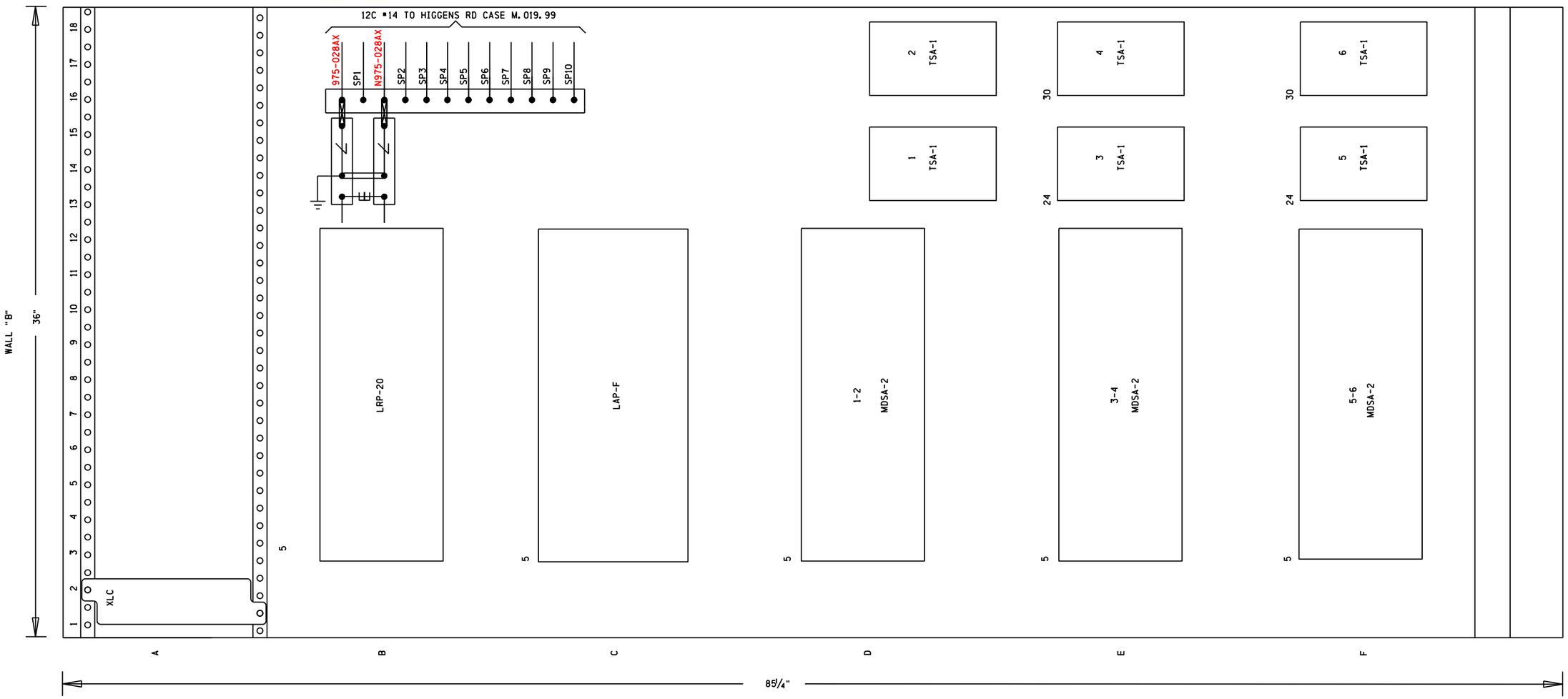

REVISIONS				
NO.	DATE	BY	DESCRIPTION	APP. BY
1				
2				
3				
4				
5				

wau-019.75-11.dgn
06-MAY-2015

SIII 21 JAN 2015

PROPOSED
DESIGN NO. 15-0066
RED-IN YELLOW-OUT

AS INSTALLED
DATE _____
BY _____
(PRINT NAME)

PROPOSED D	PROPOSED M	PROPOSED Y	REVISIONS	D	C	COMPLETED D	COMPLETED M	COMPLETED Y	C
			PLAN REDRAWN			21	01	15	NAD
21	01	15	PRATT 40MPH REV	NAD	MRB				

REGION SOUTHERN
SUB. WAUKESHA 435

SIGNALS AND COMMUNICATIONS HOMEWOOD
15 JANUARY 2003
DES. GETS
CH. FAP

TERMINAL BOARD LAYOUT

ROSEMONT, IL
O'HARE PED

WAU-019.75-11

DOT# 840 452D

SIEMENS INDUSTRY INC

DES.: NAD	DATE: 21/01/15	JOB NO.: PWCA10408	
CKD.: MRB	ISSUE DATE: N/A	EST. NO.: XP-7628	
DRN.: NAD	PLAN NO.: N/A	SHEET 11 OF 16	
P. TIME: 13:55	P. DATE: $$PLOT_DATE	CAD ID.: WAU-019.75-11	

SIEMENS INDUSTRY INC
LOUISVILLE DIVISION, LOUISVILLE, KY

REVISIONS				
NO.	DATE	BY	DESCRIPTION	APP. BY
1				
2				
3				
4				
5				

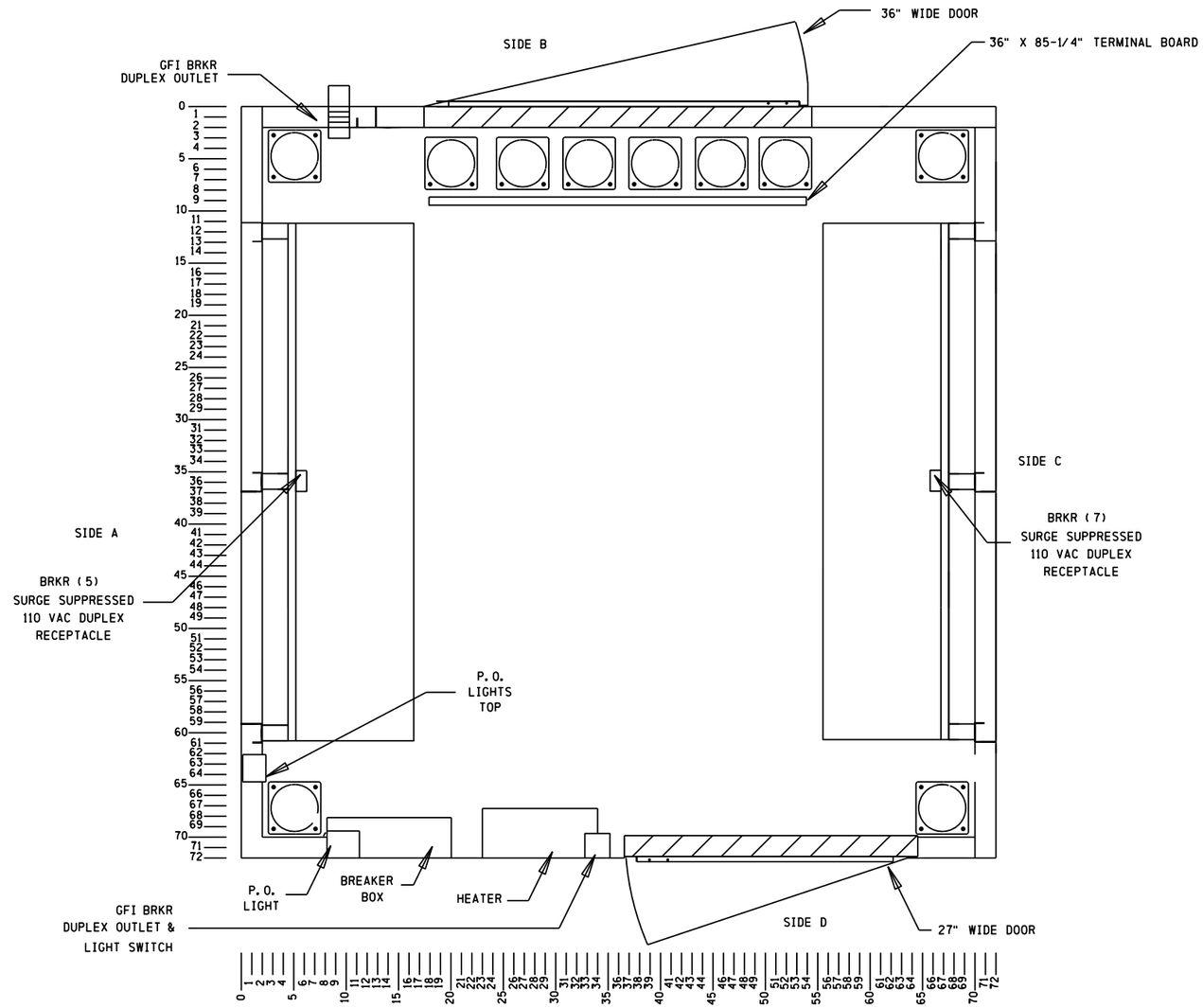

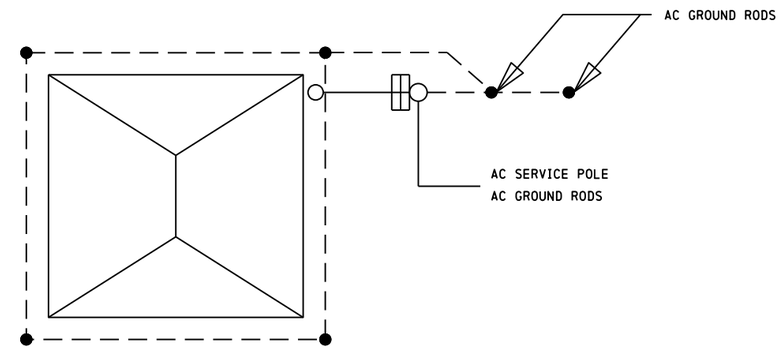

USE BARE #6 COPPER SOLID
WIRE BELOW GROUND

USE INSULATED #6 SOFT COPPER
SOLID WIRE ABOVE GROUND

PRIME GROUND TERMINAL BLOCK
BONDED TO EXTERIOR OF BUNGALOW

AC POWER IS NOT TO ENTER
THRU CABLE CHUTE

PROPOSED D	PROPOSED M	PROPOSED Y	REVISIONS	D	C	COMPLETED D	COMPLETED M	COMPLETED Y	C
			PLAN REDRAWN			21	01	15	NAD

REGION SOUTHERN
SUB. WAUKESHA 435

SIGNALS AND COMMUNICATIONS HOMEWOOD | DES. GETS
15 JANUARY 2003 | CH. FAP

6' X 6' HOUSE LAYOUT

ROSEMONT, IL
O'HARE PED

WAU-019.75-12

DOT# 840 452D

wau-019.75-12.dgn
06-MAY-2015

SIEMENS INDUSTRY INC	
DES.: NAD	DATE: 21/01/15
CKD.: MRB	ISSUE DATE: N/A
DRN.: NAD	PLAN NO.: N/A
P. TIME: 13:55	P. DATE: $$PLOT_DATE
JOB NO.: PWCA10408	
EST. NO.: XP-7628	
SHEET 12 OF 16	
CAD ID.: WAU-019.75-12	

SIEMENS INDUSTRY INC
LOUISVILLE DIVISION, LOUISVILLE, KY

REVISIONS				
NO.	DATE	BY	DESCRIPTION	APP. BY
1				
2				
3				
4				
5				

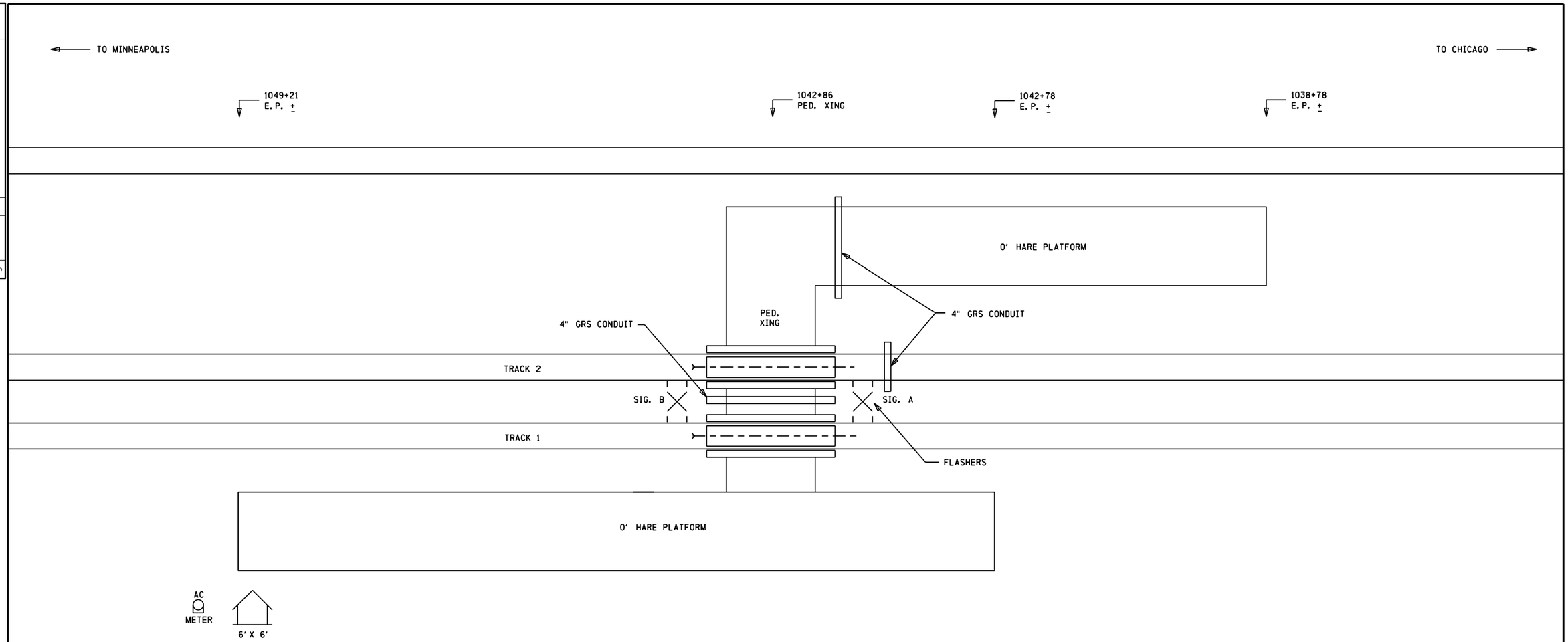

wau-019.75-13.dgn
06-MAY-2015

SIEMENS INDUSTRY INC			
DES. : NAD	DATE: 21/01/15	JOB NO.: PWCA10408	
CKD. : MRB	ISSUE DATE: N/A	EST. NO.: XP-7628	
DRN. : NAD	PLAN NO.: N/A	SHEET 13 OF 16	
P TIME: 13:55	P DATE: $$PLOT_DATE	CAD ID.: WAU-019.75-13	

PROPOSED			REVISIONS	D	C	COMPLETED			C
D	M	Y				D	M	Y	
			PLAN REDRAWN			21	01	15	NAD

REGION SOUTHERN
SUB. WAUKESHA 435

SIGNALS AND COMMUNICATIONS HOMEWOOD
DES. GETS
15 JANUARY 2003
CH. FAP

PROPOSED PED. CROSSING LAYOUT

ROSEMONT, IL
O' HARE PED

WAU-019.75-13

DOT# 840 452D

SIEMENS INDUSTRY INC
LOUISVILLE DIVISION, LOUISVILLE, KY

REVISIONS				
NO.	DATE	BY	DESCRIPTION	APP. BY
1				
2				
3				
4				
5				

HXP-3 APPLICATION DESIGN CARD 1-2

OPTION 90 (CABINET #)	CABINET #

PASSWORD(_ _•_ _)(SEE MANUAL 100052-001 AAO 1-27	TRACK 1	TRACK 2	DEFAULT
APPROACH LENGTH ADJUSTMENT	3080'	3080'	9,999 FT.
WARNING TIME ADJUSTMENT	30	30	99 SEC.
LUMPED IMPEDANCE ADJUSTMENT (LIA)	•	•	0
TRANSMITTER CHECK ADJUSTMENT (TC)	•	•	0
MOTION DETECT RESTART (MD RESTART)	0 ☆	0 ☆	99%
OPTION 1 TRACK ENABLE (TK-ENA)	UP	UP	UP (ALWAYS ENABLED)
OPTION 2 TRACK FREQUENCY (TK FO)	STRAP ◇	STRAP ◇	0 HZ
OPTION 3 CONSTANT WARNING/MOTION (CW/MD)	C	C	d (Motion)
OPTION 4 UNI/BIDIRECTIONAL (UNI-BI)	b	b	b (bI)
OPTION 5 NARROW BAND COMPENSATION (NBS-C)	⊗	⊗	9,999 FT.
OPTION 6 CWE WARNING TIME (CWEWT)	80 SEC.	80 SEC.	80 SEC.
OPTION 7 LOSS OF SHUNT TIME (LOS)	30 SEC.	30 SEC.	16 SEC.
OPTION 8 LOS W/JOINTS NEAR ISLAND (IJ-LOS)	5 SEC. ••	5 SEC.	5 SEC.
OPTION 9 BALLAST COMPENSATION (BC)	•	•	FREQUENCY DEPENDANT ◎
OPTION 10 PHASE COMPENSATION ADJUSTMENT (P-COMP)	✕✕✕	X X X	On

AX OPTIONS △		OPTION 11 AX DRIVE #1	OPTION 12 AX DRIVE #2	OPTION 13 AX DRIVE #3	DEFAULT
ITEM 1	TRACK ASSIGNMENT (TK-ASN)	N/A	N/A	N/A	1
ITEM 2	OFFSET DISTANCE TRACK 1 (OF-TK1)	0000'	0000'	0000'	0 FT.
ITEM 3	OFFSET DISTANCE TRACK 2 (OF-TK2)	N/A	N/A	N/A	N/A
ITEM 4	WARNING TIME (WT)	99 SEC.	99 SEC.	99 SEC.	99 SEC.
ITEM 5	MOTION DETECT RESTART (MD-RST)	99 %	99 %	99 %	99 %
ITEM 6	CONSTANT WARNING/MOTION (CW/MD)	d	d	d	d (Motion)
ITEM 7	CLEAR JOINTS LOS (CJ-LOS)	00 SEC.	00 SEC.	00 SEC.	0 SEC.
ITEM 8	POST JOINT DETECTION (PJ-DET)	15 SEC.	15 SEC.	15 SEC.	15 SEC.
ITEM 9	POST JOINT RX (PJ-RX)	15	15	15	15
ITEM 10	POSITIVE START	dn	dn	dn	dn
OPTION 17 MDR DRIVE OR AX RELAY DRIVE SELECTION (MDR-AX)			dn	dn	dn (STATUS ONLY) ◎

OPTION 17 SUB-MENU		TRACK 1	TRACK 2	DEFAULT
ITEM 1	MDR-AX OFFSET DISTANCE TRK. 1(OF-TK1) & TRK. 2(OF-TK2)	0000'	0000'	0 FT. = CONFIGURED AS MDR
ITEM 2	MDR-AX CLEAR JOINT LOS TIME (CJ-LOS)	00 SEC.	00 SEC.	0 SEC.
ITEM 3	MDR-AX POST JOINT DETECTION TIME (PJ-DET)	15 SEC.	15 SEC.	15 SEC.
ITEM 4	POST JOINT RX (PJ-RX)	15	15	15 (0 = DISABLE)
OPTION 18 MOTION DETECTOR TIMER (MD-TMR)		10 MIN.	10 MIN.	10 MIN. (0 = DISABLE)
OPTION 19 MINIMUM WARNING TIME WITH ADVANCED PREEMPTION (MIN-WT)		00 SEC.		00 SEC. (0 = DISABLE)
OPTION 20 FALSE SHUNT TIMER ADJUSTMENT (FS-TMR)		dn	dn	
ITEM 1	FALSE SHUNT RX (FS-RX)	0	0	0, 0 = DISABLE
ITEM 2	FALSE SHUNT TIMER ADJUSTMENT (FS-TM)	10	10	10
OPTION 21 POSITIVE START RX & TIMER ADJUSTMENT (POS-ST)		dn	dn	
ITEM 1	POSITIVE START RX (POS-RX)	0	0	0, 0 = DISABLE
ITEM 2	POSITIVE START TIMER (POS-TM)	10	10	10
OPTION 22 APPROACH RELEASE RX (AR-TM)		dn	dn	
ITEM 1	APPROACH RELEASE RX (AR-RX)	0	0	0, 0 = DISABLE
ITEM 2	APPROACH RELEASE TIMER (AR-TM)	10	10	10
OPTION 47 AUTO RX ADJUSTMENT (ATO-RX)		UP	UP	dn = DISABLE
OPTION 48 PREDICTIVE FILTER ENABLE/DISABLE (PF-ENA)		dn	dn	DN = DISABLE
OPTION 49 RESET LOCAL PARAMETERS TO DEFAULT SETTINGS (RESET)				PAGE 3-14 & 3-41
OPTION 50 RECORDER PRINTER CONTROL (PRNTR)		⊕		PAGE 1-47 & 3-41
OPTION 51 CLOCK ADJUSTMENT (CLOCK)		⊕		PAGE 3-32
OPTION 70 LOCAL SERIAL I/O PORT ADJUSTMENT (LSP)				
ITEM 1	BAUD RATE	38.4	⊕	PAGE 1-47 & 3-42
ITEM 2	DBITS (DATA BITS)	8	⊕	PAGE 1-47 & 3-42
ITEM 3	PA (PARITY)	NO(-=NO PARITY)	⊕	PAGE 1-47 & 3-42
OPTION 90 CABINET NUMBER DISPLAY (CAB)		•		PAGE 1-47 & 3-41
OPTION 91 HXP-3 OPERATING PROGRAM VERSION NUMBER (VERS)		E20.3 • 42.0		VERSION 35.0
OPTION 99 RESET PASSWORD TIMER (TIMER)		⊕		PAGE 3-30

ISLAND 1
RSI MODULE
226736-000 8.0KHZ
226736-001 4.0KHZ

ISLAND FREQ.
8.0KHZ

TRACK 1
RSI
JUMPERS

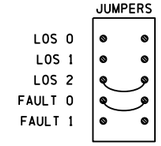

ISLAND 2
RSI MODULE
226736-000 8.0KHZ
226736-001 4.0KHZ

ISLAND FREQ.
8.0KHZ

TRACK 2
RSI
JUMPERS

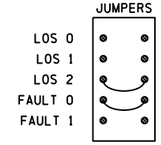

HXP-3 MODULE SETUP

HCA-3 MODULE (RECORDER)	
SIM MODULE (SERIAL INTERFACE)	
TRM MODULE (TRANSCIEVER)	TK1
RSI MODULE (ISLAND)	TK1
RYD MODULE (RELAY DRIVER)	
TRM MODULE (TRANSCEIVER)	TK2
RSI MODULE (ISLAND)	TK 2
CPU MODULE (PROCCESSOR)	
VACANT	

TRACK 1 114 HZ
TRACK 2 114 HZ

CABINET SWITCHES

MASTER/SLAVE SWITCHES ARE LOCATED ON MOTHERBOARD

MASTER/SLAVE

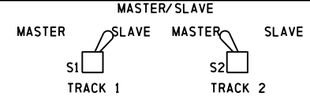

THESE SWITCHES ARE LOCATED ON MOTHERBOARD

SYSTEM CONFIGURATION

S5 & S6 DIP SWITCH POSITIONS				
SWITCH #	1	2	3	4
SWITCH POSITION	OFF	OFF	OFF	OFF
APPROACH:	NORMAL		(NOT USED)	

FREQUENCY SELECT

	S3 & S4 DIP SWITCH POSITIONS					
TRACK 1	SWITCH #	1	2	3	4	5
	SWITCH POSITION	ON	ON	OFF	ON	ON
	S7 & S8 DIP SWITCH POSITIONS					
TRACK 2	SWITCH #	1	2	3	4	5
	SWITCH POSITION	ON	ON	OFF	ON	ON

OPTION 92
CRC-M -1987
CRC-L -8E67
CKSUM -03CC

NOTE

- • = ENTRY TO BE DONE ON AS-IN-SERVICE.
- ☆ = NORMALLY SET AT "0" SEE MANUAL 100052-001 AAO PG. 1-46 & 3-41.
- ◇ = THE WORD STRAP IS DISPLAYED WHEN FREQUENCY SELECT DIP SWITCHES USED TO SELECT A STANDARD FREQUENCY.
- ⊗ = ADJUSTMENT NECESSARY ONLY WHEN AX RELAY DRIVE MODULE USED.
- •• = ADJUSTMENT NECESSARY IF INSULATED JOINTS ARE LOCATED NEAR ISLAND CIRCUIT.
- ✕✕✕ = ADJUSTMENT NECESSARY ONLY IF VERY POOR BALLAST CONDITIONS NEED TO BE COMPENSATED.
- ◎ = OPTION 17 SUB-MENU USED ONLY WHEN AX RELAY DRIVE OPERATION IS SELECTED. ENTERING AN OFFSET DISTANCE VALUE OTHER THAN ZERO ASSIGNS A MDR AS AN AX DRIVE.
- △ 1) WHEN AXD MODULES ARE NOT INSTALLED, THEIR ASSOCIATED OPTIONS AND ADJUSTMENTS ARE NOT DISPLAYED.
  2) PROGRAM UNUSED AX OPTION(S) SAME AS OPTION 11. IF AX OPTION 12 OR 13 IS USED IN FUTURE THEN REPROGRAM AS APPLICABLE.
- ◎ = FREQUENCY DEPENDANT, RANGE BETWEEN 50-250 TO BE SUPPLIED ON AS-IN-SERVICE.
- ⊕ = OPTIONS 50-99 ARE NON-VITAL AND NOT REQUIRED FOR INITIAL SETUP. SEE MANUAL 100052-001 AAO. FOR OPTIONS 49 TO 99 SEE PAGES AS LISTED IN DEFAULT COLUMN.
- ⊕ = SET CORRECT LOCAL TIME AND DATE. TIME OF DAY SHOULD BE SYNCRONIZED WITH TIME SHOWN BY EXTERNAL EVENT RECORDER.

PROPOSED D	M	Y	REVISIONS	D	C	COMPLETED D	M	Y	C
			PLAN REDRAWN			21	01	15	NAD

REGION SOUTHERN
SUB. WAUKESHA 435

SIGNALS AND COMMUNICATIONS HOMEWOOD
15 JANUARY 2003
DES. GETS
CH. FAP

EQUIPMENT SETUP INFORMATION

ROSEMONT, IL
O'HARE PED

WAU-019.75-14

DOT# 840 452D

SIEMENS INDUSTRY INC

DES.: NAD	DATE: 21/01/15	JOB NO.: PWCA10408	
CKD.: MRB	ISSUE DATE: N/A	EST. NO.: XP-7628	
DRN.: NAD	PLAN NO.: N/A	SHEET 14 OF 16	
P TIME: 13:55	P DATE: $$PLOT_DATE	CAD ID.: WAU-019.75-14	

SIEMENS INDUSTRY INC
LOUISVILLE DIVISION, LOUISVILLE, KY

wau-019.75-14.dgn
06-MAY-2015

REVISIONS			
NO.	DATE	BY	DESCRIPTION	APP. BY
1				
2				
3				
4				
5				

HXP-3 APPLICATION DESIGN CARD

3-4

OPTION 90 (CABINET #)	CABINET #

PASSWORD(_ _*_ _)(SEE MANUAL 100052-001 AAO 1-27	TRACK 1	TRACK 2	DEFAULT
APPROACH LENGTH ADJUSTMENT	2724' ☆☆	2724'	9,999 FT.
WARNING TIME ADJUSTMENT	30	30	99 SEC.
LUMPED IMPEDANCE ADJUSTMENT (LIA)	•	•	0
TRANSMITTER CHECK ADJUSTMENT (TC)	•	•	0
MOTION DETECT RESTART (MD RESTART)	0 ☆	0 ☆	99%
OPTION 1 TRACK ENABLE (TK-ENA)	UP	UP	UP (ALWAYS ENABLED)
OPTION 2 TRACK FREQUENCY (TK FO)	267	267	0 HZ
OPTION 3 CONSTANT WARNING/MOTION (CW/MD)	C	C	d (Motion)
OPTION 4 UNI/BIDIRECTIONAL (UNI-BI)	b	b	b (bI)
OPTION 5 NARROW BAND COMPENSATION (NBS-C)	⊗	⊗	9,999 FT.
OPTION 6 CWE WARNING TIME (CWEWT)	80 SEC.	80 SEC.	80 SEC.
OPTION 7 LOSS OF SHUNT TIME (LOS)	30 SEC.	30 SEC.	16 SEC.
OPTION 8 LOS W/JOINTS NEAR ISLAND (IJ-LOS)	5 SEC. ••	5 SEC. ••	5 SEC.
OPTION 9 BALLAST COMPENSATION (BC)	•	•	FREQUENCY DEPENDANT ◎
OPTION 10 PHASE COMPENSATION ADJUSTMENT (P-COMP)	✱✱✱	✱✱✱	0∩

AX OPTIONS △		OPTION 11 AX DRIVE #1	OPTION 12 AX DRIVE #2	OPTION 13 AX DRIVE #3	DEFAULT
ITEM 1	TRACK ASSIGNMENT (TK-ASN)	N/A	N/A	N/A	1
ITEM 2	OFFSET DISTANCE TRACK 1 (OF-TK1)	0000'	0000'	0000'	0 FT.
ITEM 3	OFFSET DISTANCE TRACK 2 (OF-TK2)	N/A	N/A	N/A	N/A
ITEM 4	WARNING TIME (WT)	99 SEC.	99 SEC.	99 SEC.	99 SEC.
ITEM 5	MOTION DETECT RESTART (MD-RST)	99 %	99 %	99 %	99 %
ITEM 6	CONSTANT WARNING/MOTION (CW/MD)	d	d	d	d (Motion)
ITEM 7	CLEAR JOINTS LOS (CJ-LOS)	00 SEC.	00 SEC.	00 SEC.	0 SEC.
ITEM 8	POST JOINT DETECTION (PJ-DET)	15 SEC.	15 SEC.	15 SEC.	15 SEC.
ITEM 9	POST JOINT RX (PJ-RX)	15	15	15	15
ITEM 10	POSITIVE START	dn	dn	dn	dn
OPTION 17 MDR DRIVE OR AX RELAY DRIVE SELECTION (MDR-AX)			UP	UP	dn (STATUS ONLY) ◎

OPTION 17 SUB-MENU		TRACK 1	TRACK 2	DEFAULT
ITEM 1	MDR-AX OFFSET DISTANCE TRK. 1(OF-TK1) & TRK. 2(OF-TK2)	752'	752'	0 FT. = CONFIGURED AS MDR ☆☆
ITEM 2	MDR-AX CLEAR JOINT LOS TIME (CJ-LOS)	00 SEC.	00 SEC.	0 SEC.
ITEM 3	MDR-AX POST JOINT DETECTION TIME (PJ-DET)	15 SEC.	15 SEC.	15 SEC.
ITEM 4	POST JOINT RX (PJ-RX)	15	15	15 (0 = DISABLE)
OPTION 18 MOTION DETECTOR TIMER (MD-TMR)		10 MIN.	10 MIN.	10 MIN. (0 = DISABLE)
OPTION 19 MINIMUM WARNING TIME WITH ADVANCED PREEMPTION (MIN-WT)		00 SEC.	00 SEC.	00 SEC. (0 = DISABLE)
OPTION 20 FALSE SHUNT TIMER ADJUSTMENT (FS-TMR)				
ITEM 1	FALSE SHUNT RX (FS-RX)	0	0	0, 0 = DISABLE
ITEM 2	FALSE SHUNT TIMER ADJUSTMENT (FS-TM)	10	10	10
OPTION 21 POSITIVE START RX & TIMER ADJUSTMENT (POS-ST)				
ITEM 1	POSITIVE START RX (POS-RX)	0	0	0, 0 = DISABLE
ITEM 2	POSITIVE START TIMER (POS-TM)	10	10	10
OPTION 22 APPROACH RELEASE RX (AR-TM)				
ITEM 1	APPROACH RELEASE RX (AR-RX)	0	0	0, 0 = DISABLE
ITEM 2	APPROACH RELEASE TIMER (AR-TM)	10	10	10
OPTION 47 AUTO RX ADJUSTMENT (ATO-RX)		UP	UP	dn = DISABLE
OPTION 48 PREDICTIVE FILTER ENABLE/DISABLE (PF-ENA)		dn	dn	UP = ENABLE
OPTION 49 RESET LOCAL PARAMETERS TO DEFAULT SETTINGS (RESET)				PAGE 3-14 & 3-41
OPTION 50 RECORDER PRINTER CONTROL (PRNTR)		✧		PAGE 1-47 & 3-41
OPTION 51 CLOCK ADJUSTMENT (CLOCK)		✧		PAGE 3-32
OPTION 70 LOCAL SERIAL I/O PORT ADJUSTMENT (LSP)				
ITEM 1	BAUD RATE	19.2	✧	PAGE 1-47 & 3-42
ITEM 2	DBITS (DATA BITS)	8	✧	PAGE 1-47 & 3-42
ITEM 3	PA (PARITY)	NO(-=NO PARITY)	✧	PAGE 1-47 & 3-42
OPTION 90 CABINET NUMBER DISPLAY (CAB)		P42.0 •	E20.3	PAGE 1-47 & 3-41
OPTION 91 HXP-3 OPERATING PROGRAM VERSION NUMBER (VERS)		•		VERSION 35.0
OPTION 99 RESET PASSWORD TIMER (TIMER)		DS	✧	PAGE 3-30

(NOT USED)

ISLAND 1
RSI MODULE
226736-000 8.0KHZ
226736-001 4.0KHZ

ISLAND FREQ.
X.XKHZ

TRACK 1
RSI
JUMPERS

LOS 0
LOS 1
LOS 2
FAULT 0
FAULT 1

(NOT USED)

ISLAND 2
RSI MODULE
226736-000 8.0KHZ
226736-001 4.0KHZ

ISLAND FREQ.
X.XKHZ

TRACK 2
RSI
JUMPERS

LOS 0
LOS 1
LOS 2
FAULT 0
FAULT 1

HXP-3 MODULE SETUP

RMM MODULE (RECORDER)
SIM MODULE (SERIAL INTERFACE)
TRM MODULE (TRANSCIEVER) TK1
VACANT
RYD MODULE (RELAY DRIVER)
VACANT
TRM MODULE (TRANSCIEVER) TK2
CPU MODULE (PROCCESSOR)
VACANT

TRACK 1 267 HZ
TRACK 2 267 HZ

CABINET SWITCHES
MASTER/SLAVE SWITCHES ARE LOCATED ON MOTHERBOARD
MASTER/SLAVE
MASTER SLAVE S1 TRACK 1 — MASTER SLAVE S2 TRACK 2
THESE SWITCHES ARE LOCATED ON MOTHERBOARD

OPTION 92
CRC-M -1987
CRC-L -8E67
CKSUM -03CC

SYSTEM CONFIGURATION				
S5 & S6 DIP SWITCH POSITIONS				
SWITCH #	1	2	3	4
SWITCH POSITION	ON	OFF	OFF	OFF
APPROACH:	NORMAL		(NOT USED)	

FREQUENCY SELECT						
TRACK 1	S3 & S4 DIP SWITCH POSITIONS					
	SWITCH #	1	2	3	4	5
	SWITCH POSITION	OFF	OFF	OFF	ON	OFF
TRACK 2	S7 & S8 DIP SWITCH POSITIONS					
	SWITCH #	1	2	3	4	5
	SWITCH POSITION	OFF	OFF	OFF	ON	OFF

NOTE

- • = ENTRY TO BE DONE ON AS-IN-SERVICE.
- ☆ = NORMALLY SET AT "0" SEE MANUAL 100052-001 AAO PG. 1-46 & 3-41.
- ◇ = THE WORD STRAP IS DISPLAYED WHEN FREQUENCY SELECT DIP SWITCHES USED TO SELECT A STANDARD FREQUENCY.
- ⊗ = ADJUSTMENT NECESSARY ONLY WHEN AX RELAY DRIVE MODULE USED.
- •• = ADJUSTMENT NECESSARY IF INSULATED JOINTS ARE LOCATED NEAR ISLAND CIRCUIT.
- ✱✱✱ = ADJUSTMENT NECESSARY ONLY IF VERY POOR BALLAST CONDITIONS NEED TO BE COMPENSATED.
- ◎ = OPTION 17 SUB-MENU USED ONLY WHEN AX RELAY DRIVE OPERATION IS SELECTED. ENTERING AN OFFSET DISTANCE VALUE OTHER THAN ZERO ASSIGNS A MDR AS AN AX DRIVE.
- △ 1)WHEN AXD MODULES ARE NOT INSTALLED, THEIR ASSOCIATED OPTIONS AND ADJUSTMENTS ARE NOT DISPLAYED.
  2)PROGRAM UNUSED AX OPTION(S) SAME AS OPTION 11. IF AX OPTION 12 OR 13 IS USED IN FUTURE THEN REPROGRAM AS APPLICABLE.
- ◎ = FREQUENCY DEPENDANT. RANGE BETWEEN 50-250 TO BE SUPPLIED ON AS-IN-SERVICE.
- ✧ = OPTIONS 50-99 ARE NON-VITAL AND NOT REQUIRED FOR INITIAL SETUP. SEE MANUAL 100052-001 AAO. FOR OPTIONS 49 TO 99 SEE PAGES AS LISTED IN DEFAULT COLUMN.
- ✧ = SET CORRECT LOCAL TIME AND DATE. TIME OF DAY SHOULD BE SYNCRONIZED WITH TIME SHOWN BY EXTERNAL EVENT RECORDER.
- ☆☆ = FIELD VERIFY

PROPOSED D	M	Y	REVISIONS	D	C	COMPLETED D	M	Y	C
			PLAN REDRAWN			21	01	15	NAD

REGION SOUTHERN
SUB. WAUKESHA 435

SIGNALS AND COMMUNICATIONS HOMEWOOD
15 JANUARY 2003
DES. GETS
CH. FAP

EQUIPMENT SETUP INFORMATION

ROSEMONT, IL
O'HARE PED

WAU-019.75-15

DOT# 840 452D

wau-019.75-15.dgn
06-MAY-2015

SIEMENS INDUSTRY INC			
DES. : NAD	DATE: 21/01/15	JOB NO.: PWCA10408	
CKD. : MRB	ISSUE DATE: N/A	EST. NO.: XP-7628	
DRN. : NAD	PLAN NO.: N/A	SHEET 15 OF 16	
P TIME: 13:55	P DATE: $$PLOT_DATE	CAD ID.: WAU-019.75-15	

SIEMENS INDUSTRY INC
LOUISVILLE DIVISION, LOUISVILLE, KY

REVISIONS				
NO.	DATE	BY	DESCRIPTION	APP. BY
1				
2				
3				
4				
5				

HXP-3 APPLICATION DESIGN CARD 5-6

OPTION 90 (CABINET #)	CABINET #

PASSWORD(_ _•_ _)(SEE MANUAL 100052-001 AAO 1-27	TRACK 1	TRACK 2	DEFAULT
APPROACH LENGTH ADJUSTMENT	2256'	2256'	9,999 FT.
WARNING TIME ADJUSTMENT	36 31	36 31	99 SEC.
LUMPED IMPEDANCE ADJUSTMENT (LIA)	•	•	0
TRANSMITTER CHECK ADJUSTMENT (TC)	•	•	0
MOTION DETECT RESTART (MD RESTART)	0 ☆	0 ☆	99%
OPTION 1 TRACK ENABLE (TK-ENA)	UP	UP	UP (ALWAYS ENABLED)
OPTION 2 TRACK FREQUENCY (TK FO)	267 ◇	267 ◇	0 HZ
OPTION 3 CONSTANT WARNING/MOTION (CW/MD)	C	C	d (Motion)
OPTION 4 UNI/BIDIRECTIONAL (UNI-BI)	b	b	b (bI)
OPTION 5 NARROW BAND COMPENSATION (NBS-C)	⊗	⊗	9,999 FT.
OPTION 6 CWE WARNING TIME (CWEWT)	80 SEC.	80 SEC.	80 SEC.
OPTION 7 LOSS OF SHUNT TIME (LOS)	30 SEC.	30 SEC.	16 SEC.
OPTION 8 LOS W/JOINTS NEAR ISLAND (IJ-LOS)	5 SEC. ••	5 SEC. ••	5 SEC.
OPTION 9 BALLAST COMPENSATION (BC)	•	•	FREQUENCY DEPENDANT ◎
OPTION 10 PHASE COMPENSATION ADJUSTMENT (P-COMP)	✕✕✕	✕✕✕	0Ω

AX OPTIONS △		OPTION 11 AX DRIVE #1	OPTION 12 AX DRIVE #2	OPTION 13 AX DRIVE #3	DEFAULT
ITEM 1	TRACK ASSIGNMENT (TK-ASN)	N/A	N/A	N/A	1
ITEM 2	OFFSET DISTANCE TRACK 1 (OF-TK1)	0000'	0000'	0000'	0 FT.
ITEM 3	OFFSET DISTANCE TRACK 2 (OF-TK2)	N/A	N/A	N/A	N/A
ITEM 4	WARNING TIME (WT)	99 SEC.	99 SEC.	99 SEC.	99 SEC.
ITEM 5	MOTION DETECT RESTART (MD-RST)	99 %	99 %	99 %	99 %
ITEM 6	CONSTANT WARNING/MOTION (CW/MD)	d	d	d	d (Motion)
ITEM 7	CLEAR JOINTS LOS (CJ-LOS)	00 SEC.	00 SEC.	00 SEC.	0 SEC.
ITEM 8	POST JOINT DETECTION (PJ-DET)	15 SEC.	15 SEC.	15 SEC.	15 SEC.
ITEM 9	POST JOINT RX (PJ-RX)	15	15	15	15
ITEM 10	POSITIVE START	dn	dn	dn	dn
OPTION 17 MDR DRIVE OR AX RELAY DRIVE SELECTION (MDR-AX)		◎		N/A	dn (STATUS ONLY) ◎

	OPTION 17 SUB-MENU	TRACK 1	TRACK 2	DEFAULT
ITEM 1	MDR-AX OFFSET DISTANCE TRK. 1(OF-TK1) & TRK. 2(OF-TK2)	1916' 1964'	1916' 1964'	0 FT. = CONFIGURED AS MDR
ITEM 2	MDR-AX CLEAR JOINT LOS TIME (CJ-LOS)	00 SEC.	00 SEC.	0 SEC.
ITEM 3	MDR-AX POST JOINT DETECTION TIME (PJ-DET)	15 SEC.	15 SEC.	15 SEC.
ITEM 4	POST JOINT RX (PJ-RX)	15	15	15 (0 = DISABLE)
OPTION 18 MOTION DETECTOR TIMER (MD-TMR)		10 MIN.	10 MIN.	10 MIN. (0 = DISABLE)
OPTION 19 MINIMUM WARNING TIME WITH ADVANCED PREEMPTION (MIN-WT)		00 SEC.	00 SEC.	00 SEC. (0 = DISABLE)
	OPTION 20 FALSE SHUNT TIMER ADJUSTMENT (FS-TMR)			
ITEM 1	FALSE SHUNT RX (FS-RX)	0	0	0, 0 = DISABLE
ITEM 2	FALSE SHUNT TIMER ADJUSTMENT (FS-TM)	10	10	10
	OPTION 21 POSITIVE START RX & TIMER ADJUSTMENT (POS-ST)			
ITEM 1	POSITIVE START RX (POS-RX)	0	0	0, 0 = DISABLE
ITEM 2	POSITIVE START TIMER (POS-TM)	10	10	10
	OPTION 22 APPROACH RELEASE RX (AR-TM)			
ITEM 1	APPROACH RELEASE RX (AR-RX)	0	0	0, 0 = DISABLE
ITEM 2	APPROACH RELEASE TIMER (AR-TM)	10	10	10
OPTION 47 AUTO RX ADJUSTMENT (ATO-RX)		UP	UP	dn = DISABLE
OPTION 48 PREDICTIVE FILTER ENABLE/DISABLE (PF-ENA)		dn	dn	UP = ENABLE
OPTION 49 RESET LOCAL PARAMETERS TO DEFAULT SETTINGS (RESET)				PAGE 3-14 & 3-41
OPTION 50 RECORDER PRINTER CONTROL (PRNTR)		⊕		PAGE 1-47 & 3-41
OPTION 51 CLOCK ADJUSTMENT (CLOCK)		⊕		PAGE 3-32
	OPTION 70 LOCAL SERIAL I/O PORT ADJUSTMENT (LSP)			
ITEM 1	BAUD RATE	19.2	⊕	PAGE 1-47 & 3-42
ITEM 2	DBITS (DATA BITS)	8	⊕	PAGE 1-47 & 3-42
ITEM 3	PA (PARITY)	NO(-=NO PARITY)	⊕	PAGE 1-47 & 3-42
OPTION 90 CABINET NUMBER DISPLAY (CAB)		•		PAGE 1-47 & 3-41
OPTION 91 HXP-3 OPERATING PROGRAM VERSION NUMBER (VERS)		P42.0 • E20.3		VERSION 35.0
OPTION 99 RESET PASSWORD TIMER (TIMER)		⊕		PAGE 3-30

(NOT USED)

ISLAND 1
RSI MODULE
226736-000 8.0KHZ
226736-001 4.0KHZ

ISLAND FREQ.
X.XKHZ

TRACK 1
RSI
JUMPERS

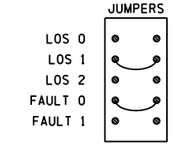

(NOT USED)

ISLAND 2
RSI MODULE
226736-000 8.0KHZ
226736-001 4.0KHZ

ISLAND FREQ.
X.XKHZ

TRACK 2
RSI
JUMPERS

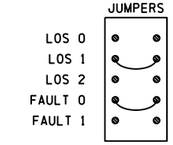

HXP-3 MODULE SETUP

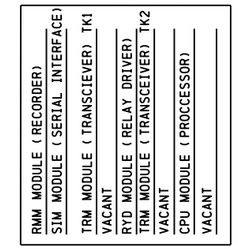

TRACK 1 267 HZ
TRACK 2 267 HZ

CABINET SWITCHES
MASTER/SLAVE SWITCHES ARE LOCATED ON MOTHERBOARD
MASTER/SLAVE

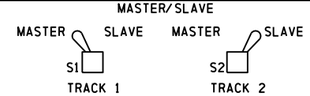

THESE SWITCHES ARE LOCATED ON MOTHERBOARD

SYSTEM CONFIGURATION				
S5 & S6 DIP SWITCH POSITIONS				
SWITCH #	1	2	3	4
SWITCH POSITION	ON	OFF	OFF	OFF
APPROACH:	NORMAL		(NOT USED)	

FREQUENCY SELECT						
TRACK 1	S3 & S4 DIP SWITCH POSITIONS					
	SWITCH #	1	2	3	4	5
	SWITCH POSITION	OFF	OFF	OFF	ON	OFF
TRACK 2	S7 & S8 DIP SWITCH POSITIONS					
	SWITCH #	1	2	3	4	5
	SWITCH POSITION	OFF	OFF	OFF	ON	OFF

OPTION 92
CRC-M -1987
CRC-L -8E67
CKSUM -03CC

NOTE

- • = ENTRY TO BE DONE ON AS-IN-SERVICE.
- ☆ = NORMALLY SET AT "0" SEE MANUAL 100052-001 AAO PG. 1-46 & 3-41.
- ◇ = THE WORD STRAP IS DISPLAYED WHEN FREQUENCY SELECT DIP SWITCHES USED TO SELECT A STANDARD FREQUENCY.
- ⊗ = ADJUSTMENT NECESSARY ONLY WHEN AX RELAY DRIVE MODULE USED.
- •• = ADJUSTMENT NECESSARY IF INSULATED JOINTS ARE LOCATED NEAR ISLAND CIRCUIT.
- ✕✕✕ = ADJUSTMENT NECESSARY ONLY IF VERY POOR BALLAST CONDITIONS NEED TO BE COMPENSATED.
- ◎ = OPTION 17 SUB-MENU USED ONLY WHEN AX RELAY DRIVE OPERATION IS SELECTED. ENTERING AN OFFSET DISTANCE VALUE OTHER THAN ZERO ASSIGNS A MDR AS AN AX DRIVE.
- △ 1) WHEN AXD MODULES ARE NOT INSTALLED, THEIR ASSOCIATED OPTIONS AND ADJUSTMENTS ARE NOT DISPLAYED.
  2) PROGRAM UNUSED AX OPTION(S) SAME AS OPTION 11. IF AX OPTION 12 OR 13 IS USED IN FUTURE THEN REPROGRAM AS APPLICABLE.
- ◎ = FREQUENCY DEPENDANT, RANGE BETWEEN 50-250 TO BE SUPPLIED ON AS-IN-SERVICE.
- ⊕ = OPTIONS 50-99 ARE NON-VITAL AND NOT REQUIRED FOR INITIAL SETUP. SEE MANUAL 100052-001 AAO. FOR OPTIONS 49 TO 99 SEE PAGES AS LISTED IN DEFAULT COLUMN.
- ⊕ = SET CORRECT LOCAL TIME AND DATE. TIME OF DAY SHOULD BE SYNCRONIZED WITH TIME SHOWN BY EXTERNAL EVENT RECORDER.

SII 21 JAN 2015

PROPOSED
DESIGN NO. 15-0066
RED-IN YELLOW-OUT

AS INSTALLED
DATE _____
BY _____
(PRINT NAME)

PROPOSED D	M	Y	REVISIONS	D	C	COMPLETED D	M	Y	C
			PLAN REDRAWN			21	01	15	NAD
21	01	15	PRATT 40MPH REV	NAD	MRB				

REGION SOUTHERN
SUB. WAUKESHA 435
CN

SIGNALS AND COMMUNICATIONS HOMEWOOD
15 JANUARY 2003
DES. GETS
CH. FAP

EQUIPMENT SETUP INFORMATION
ROSEMONT, IL
O'HARE PED

WAU-019.75-16

DOT# 840 452D

16

wau-019.75-16.dgn
06-MAY-2015

SIEMENS INDUSTRY INC

DES.: NAD	DATE: 21/01/15	JOB NO.: PWCA10408	
CKD.: MRB	ISSUE DATE: N/A	EST. NO.: XP-7628	
DRN.: NAD	PLAN NO.: N/A	SHEET 16 OF 16	
P TIME: 13:55	P DATE: $$PLOT_DATE	CAD ID.: WAU-019.75-16	

SIEMENS INDUSTRY INC
LOUISVILLE DIVISION, LOUISVILLE, KY