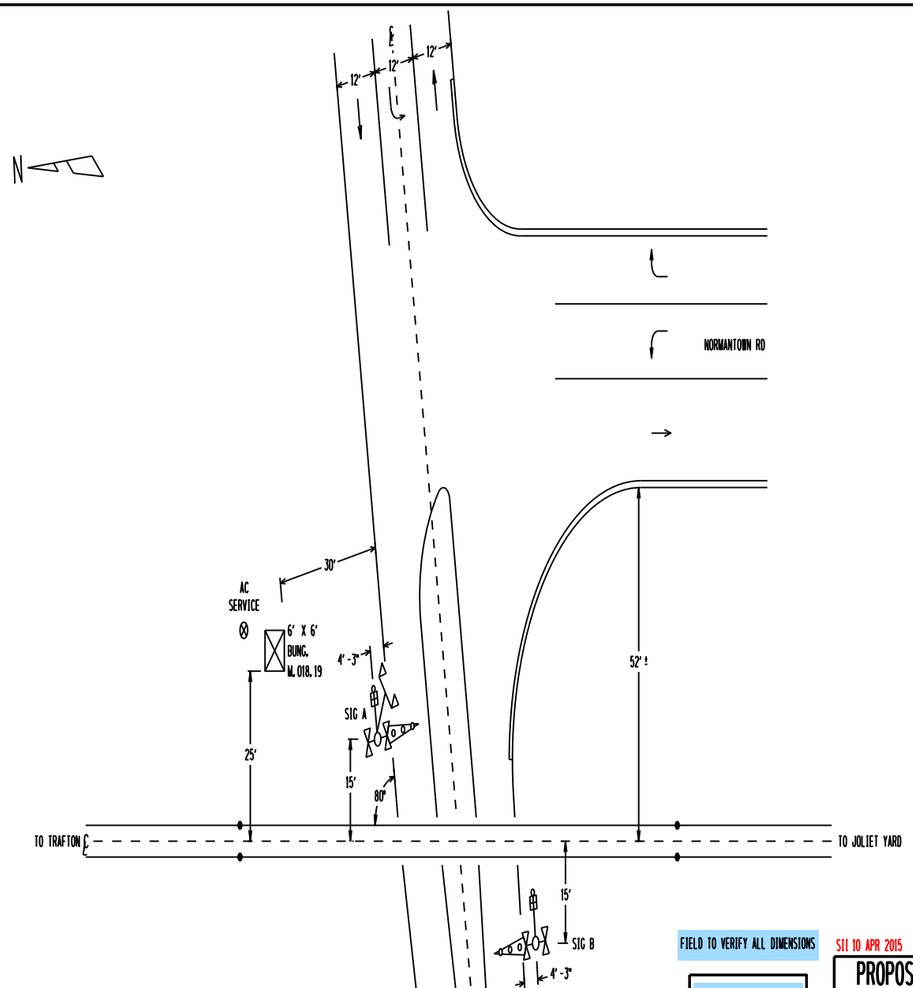

NOTES

1) 45 MPH DESIGN SPEED

2) 35 FEET MAXIMUM CLEARANCE DISTANCE

3) 136 FEET ISLAND DISTANCE

4) CONSTANT WARNING CONTROL

5) APPROACH CIRCUIT DISTANCE PROVIDES FOR:
   0 SEC CLEARANCE TIME
   0 28 SEC PREEMPTION TIME (0 SEC ADVANCE TIME)
   20 28 SEC MINIMUM WARNING TIME
   4 SEC GATE DESCENT DELAY
   5 10 SEC BUFFER TIME
   5 SEC EQUIPMENT REACTION TIME

6) 20 FEET SIG A GATE ARM LENGTH
   20 FEET SIG B GATE ARM LENGTH

FIELD TO VERIFY ALL DIMENSIONS

TO BE CONFIRMED

CONFIRMED
DATE
BY
(PRINT NAME)

SII 10 APR 2015

PROPOSED
DESIGN NO. 15-0124
RED-IN YELLOW-OUT

AS INSTALLED
DATE
BY
(PRINT NAME)

PROPOSED D	M	T	REVISIONS	D	C	COMPLETED D	M	T	C
			PLAN REDRAWN			15	12	14	KLT
10	04	15	ADD INTERCONNECT	DAB	DRD				

REGION SOUTHERN
SUB. LEITHTON 332
CN
SIGNALS AND COMMUNICATIONS HOMEWOOD
DES.
CHL
SITUATION SKETCH
SCALE 1" = 20'
AURORA, IL
MONTGOMERY RD
LEI-018.19-0

SIEMENS INDUSTRY INC
LOUISVILLE DIVISION, LOUISVILLE, KY

DOT#260 562L 14

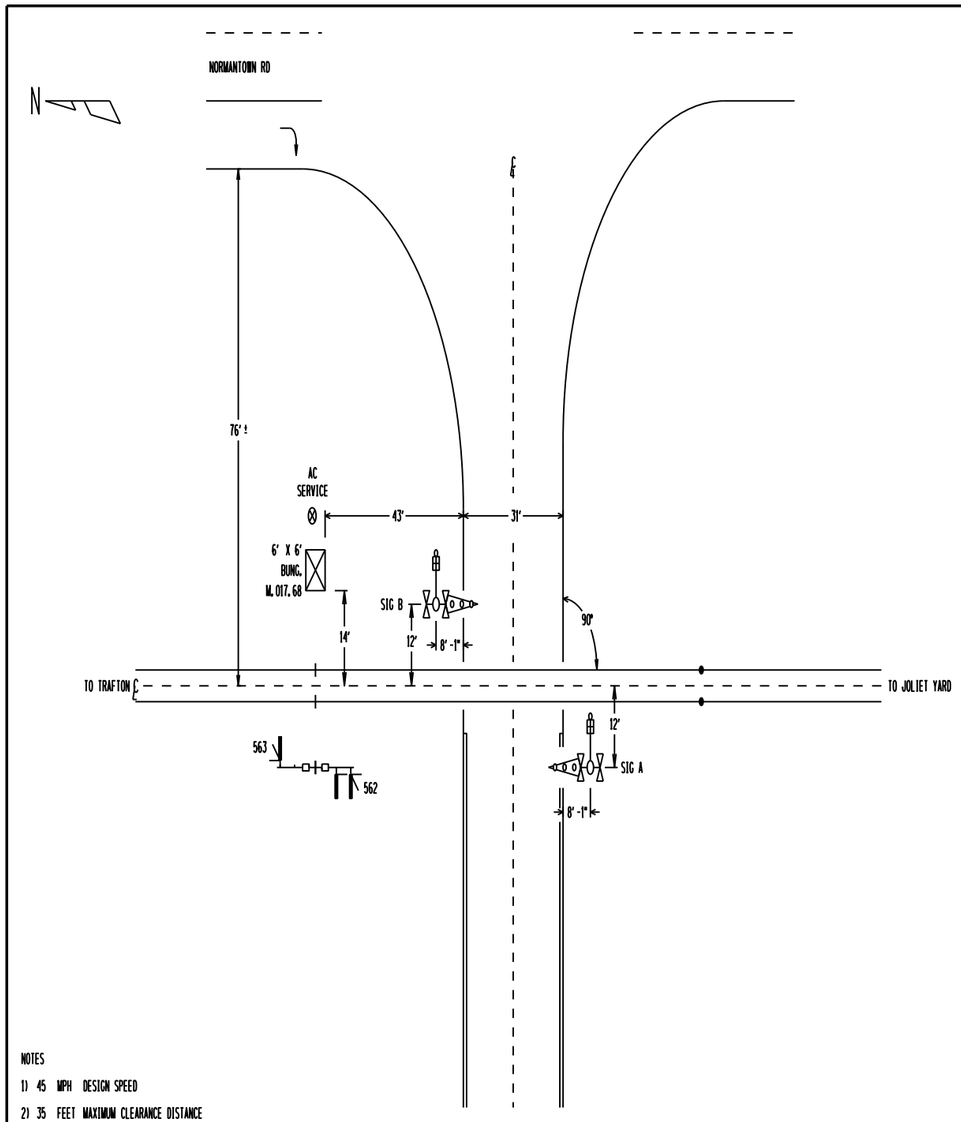

NOTES

1) 45 MPH DESIGN SPEED

2) 35 FEET MAXIMUM CLEARANCE DISTANCE

3) 120 FEET ISLAND DISTANCE

4) CONSTANT WARNING CONTROL

5) APPROACH CIRCUIT DISTANCE PROVIDES FOR:
   0 SEC CLEARANCE TIME
   0 SEC PREEMPTION TIME (0 SEC ADVANCE TIME)
   20 SEC MINIMUM WARNING TIME
   4 SEC GATE DESCENT DELAY
   10 SEC BUFFER TIME
   5 SEC EQUIPMENT REACTION TIME

6) 19.5 FEET SIG A GATE ARM LENGTH
   16 FEET SIG B GATE ARM LENGTH

FIELD TO VERIFY ALL DIMENSIONS

TO BE CONFIRMED

CONFIRMED
DATE
BY
(PRINT NAME)

SII 15 DEC 2014

PROPOSED
DESIGN NO. PTC-012
RED-IN YELLOW-OUT

AS INSTALLED
DATE
BY
(PRINT NAME)

PROPOSED D	M	T	REVISIONS	D	C	COMPLETED D	M	T	C
			PLAN REDRAWN			15	12	14	KLT
15	12	14	PTC UPGRADE	DAB	SIA				

REGION SOUTHERN
SUB. LEITHTON 332
CN
SIGNALS AND COMMUNICATIONS HOMEWOOD
DES.
CHL
SITUATION SKETCH
SCALE 1" = 20'
AURORA, IL
87TH ST
LEI-017.68-0

SIEMENS INDUSTRY INC
LOUISVILLE DIVISION, LOUISVILLE, KY

DOT#260 563T 19

CONTENT	SHEET NO.
SITUATION SKETCH	0
INDEX, TRACK LAYOUT, R & A, & PTC CHART	01
HXP WIRING	02
HXP SETUP SHEET	03
LOGIC GATE & LAMP CONTROL WIRING	04
CABLE & ARRESTOR PANEL WIRING	05
CROSSING GATE WIRING	06
BATTERY BUS & RECTIFIER WIRING	07
AC POWER DISTRIBUTION	08
HOUSE LAYOUT AND SIDE 'A' DETAIL	09
RTU WIRING	10
SIDE 'B' TERMINAL BOARD DETAIL	11
HOUSE LAYOUT - SIDE 'C' DETAIL	12
ELECTROCODE & SIGNAL 562/563 WIRING	13
EC4 CHASSIS LAYOUT & MODULE CONFIGURATIONS	14
EC4 PTC WIU SOFTWARE CONFIGURATION	15
PTC COMM CASE RADIO, WIU, & WMS CONNECTIONS	16
PTC COMM CASE POWER DISTRIBUTION	17
PTC COMM CASE LAYOUT	18

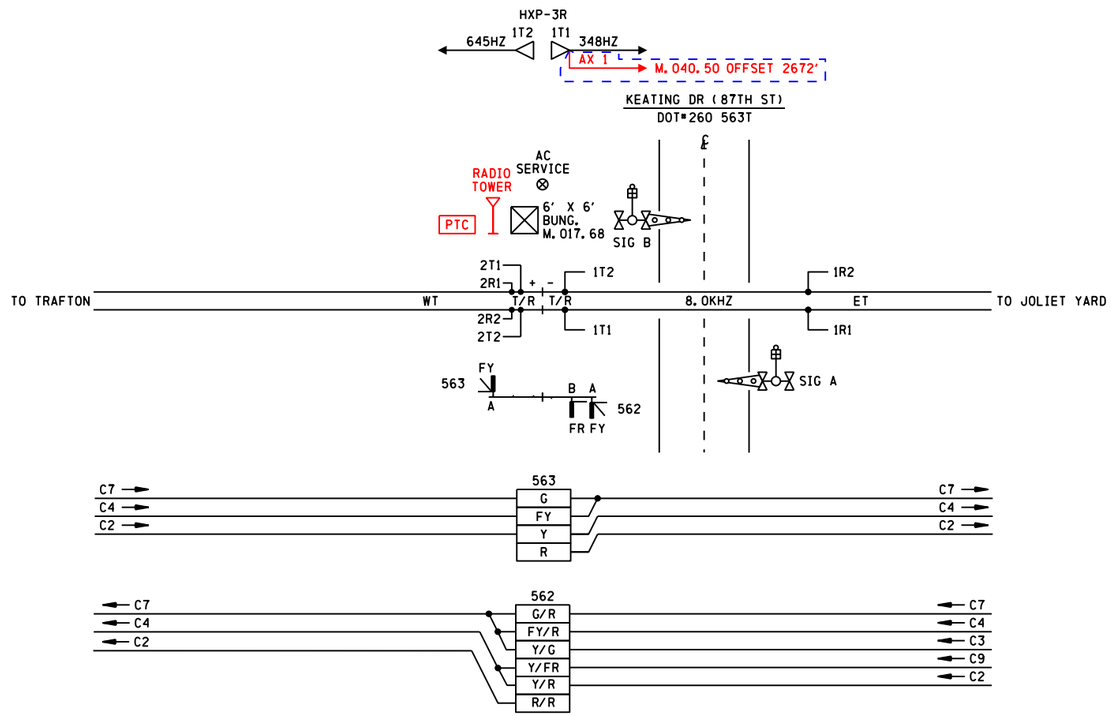

HOUSE CABLE ASSIGNMENTS

DEVICE	CABLE(S)
GATE A	(2) 7C #6
GATE B	(2) 7C #6
1T1, 1T2	2C #6 TW
1R1, 1R2	2C #6 TW
2T1, 2T2	2C #6 TW
2R1, 2R2	2C #6 TW
ETB, ETN	2C #6 TW
563RB, 563RN	2C #6 TW
HD LINE CONNECT	12C #14
AC POWER	3C #2 w/ Ground
SIGNAL 562A	5C #6
SIGNAL 562B	5C #6
SIGNAL 563	5C #6

PTC RULES AND VALUES: CNEC4

PTC LIB. RULE ID	USOR RULE NAME	USOR RULE #	PTC VALUE
1	CLEAR	803	3
2	ADVANCE APPROACH	804	7
3	APPROACH	805	8
5-6	APPROACH RESTRICTING	806	13
9-11	APPROACH DIVERGING	808	17
31-33	RESTRICTED PROCEED	815	14
34-37	STOP	816	15
92	DARK		30

DENOTES PROPOSAL 15-0124
REVISION 10/04/15

SII 10 APR 2015

PROPOSED
DESIGN NO. 15-0124
RED-IN YELLOW-OUT

AS INSTALLED
DATE _____
BY _____
(PRINT NAME)

SII 15 DEC 2014

PROPOSED
DESIGN NO. PTC-012
RED-IN YELLOW-OUT

AS INSTALLED
DATE _____
BY _____
(PRINT NAME)

PROPOSED D	PROPOSED M	PROPOSED Y	REVISIONS	D	C	COMPLETED D	COMPLETED M	COMPLETED Y	C
			PLAN REDRAWN			15	12	14	KLT
15	12	14	PTC UPGRADE	DJB	SIA				
10	04	15	M.018.19 INTERCONNECT	NAD	MRB				

REGION SOUTHERN
SUB. LEITHTON 332

SIGNALS AND COMMUNICATIONS HOMEWOOD
15 DECEMBER 2014
DES. DJB
CH. SIA

INDEX, TRACK LAYOUT, R & A, & PTC CHART
AURORA, IL
87TH ST

LEI-017.68-01
DOT#260 563T

lei-017.68-01.dgn
27-APR-2015

NO.	DATE	BY	REVISIONS DESCRIPTION	APP. BY
1				
2				
3				
4				
5				

SIEMENS INDUSTRY INC

DES.: DJB	DATE: 15/12/2014	JOB NO.: JXXE04728
CKD.: SIA	ISSUE DATE: N/A	EST. NO.: GDE000274
DRN.: DJB	PLAN NO.: N/A	SHEET 1 OF 18
P TIME: 10:15	P DATE: $$PLOT_DATE	CAD ID.: LEI-017.68-01

SIEMENS INDUSTRY INC
LOUISVILLE DIVISION, LOUISVILLE, KY

REVISIONS				
NO.	DATE	BY	DESCRIPTION	APP. BY
1				
2				
3				
4				
5				

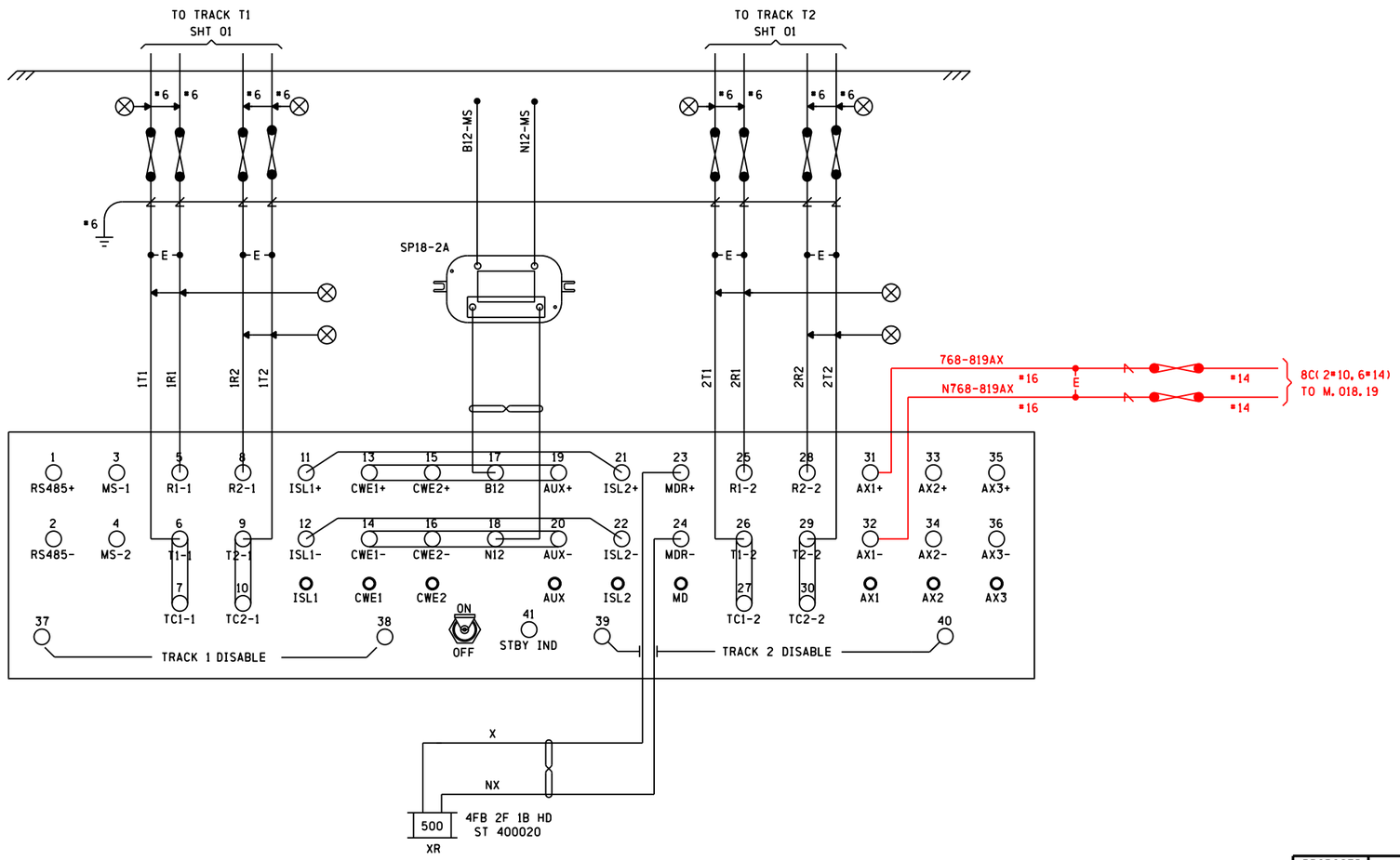

NOTES

1) ALL WIRING THIS SHEET TO BE #10 UNLESS OTHERWISE SHOWN

⊗ = TWIST TWO TURNS PER FOOT

SII 10 APR 2015

PROPOSED
DESIGN NO. 15-0124
RED-IN YELLOW-OUT

AS INSTALLED
DATE _____
BY _____
(PRINT NAME)

PROPOSED D	PROPOSED M	PROPOSED Y	REVISIONS	D	C	COMPLETED D	COMPLETED M	COMPLETED Y	C
			PLAN REDRAWN			15	12	14	DJB
10	04	15	M. 018. 19 INTERCONNECT	NAD	MRB				

REGION SOUTHERN
SUB. LEITHTON 332

SIGNALS AND COMMUNICATIONS HOMEWOOD
02 DECEMBER 2001
DES. BJH
CH. JJ

HXP WIRING

AURORA, IL
87TH ST

LEI-017. 68-02

DOT# 260 563T

SIEMENS INDUSTRY INC

DES. : DJB	DATE: 15/12/2014	JOB NO. : JXXE04728	
CKD. : SIA	ISSUE DATE: N/A	EST. NO. :GDE000274	
DRN. : DJB	PLAN NO. :N/A	SHEET 2 OF 18	
P TIME:10:15	P DATE: $$PLOT_DATE	CAD ID. :LEI-017. 68-02	

SIEMENS INDUSTRY INC
LOUISVILLE DIVISION, LOUISVILLE, KY

lei-017. 68-02. dgn
27-APR-2015

Grade Crossing Location Record

Cabinet Number (Option 90) 7661

Location 87th STREET Milepost 17.68 DOT 260 563T Date 10 / 06 / 08

Operating Program HPN ____ Version 41.0

System Monitor Program HPN ____ Version 20.2

Hardware Settings

Track 1 Master X Slave 4 kHz 8 kHz X

LOS jumper 0 1 X 2 Fault jumper 0 X 1

Approach configuration switch position: Normal X Short Very Short

Track 2 Master Slave X 4 kHz 8 kHz

LOS jumper 0 1 2 Fault jumper 0 1

Approach configuration switch position: Normal X Short Very Short

Adjust Select Adjustments

No.	Adjustment	Default	Range	Track 1	Track 2
1	Approach Length	9,999	0 - 9,999	2320 2225 feet	2320 2183 feet
2	Warning Time	99	23 - 99	30 25 seconds	30 25 seconds
3	LIA	0	-9 to +9	-1 steps	6 steps
4	TC (1 step = 32)	395	430 - 470	418 steps	418 steps
5	MD Restart	99%	0 - 99%	0 RX	0 RX

Option Adjustments

No.	Adjustment	Default	Range	Track 1	Track 2
0	RX	0	1-100		
1	TK-ENA	UP	UP or dn	UP X dn	UP X dn
2	TK FO	0	0 - 9999	348 Hz	645 Hz
3	CW/MD	d	C to d	C X d	C X d
4	UNI-BI	b	U - b	U X b	U X b
5	NBS-C	0	0 - 99	95	95 RX
		9,999	RX dependant	2342	2297 feet
6	CWEWT	80	0 - 99	80	80 seconds
7	LOS	16	4 - 99	30 16	30 16 seconds
8	IJ-LOS	5	3 - 99	5	5 seconds
9	BC	frequency dependant	50 -250	142	149
10	P-COMP	0	0 - 10	0	0 degrees

HXP-3, HXP-3R, HXP-3R2

AX Adjustment Options NOTE: NO AX DRIVE IS USED AT THIS LOCATION

	Default	Range	Option 11 - AX1	Option 12 - AX2	Option 13 - AX3
TK-ASN		1, 2, Both	1 X 2 Both	1 2 Both	1 2 Both
OF-TK1	0	0 - 9,999	2672 feet	feet	feet
OF-TK2	0	0 - 9,999	N/A feet	feet	feet
WT	99	23 - 99	38 seconds	seconds	seconds
MD-RST	99	0 - 99%	N/A RX	RX	RX
CW/MD	d	C or d	C X d	C d	C d
CJ-LOS	0	3 - 99	0 seconds	seconds	seconds
PJ-DET	15	4 - 15	15 seconds	seconds	seconds
POS-ST	dn	UP or dn	UP dn X	UP dn	UP dn

No.	Adjustment	Default	Range	Track 1	Track 2
17	MDR-AX	n*	n or A	n X A	n X A
	OF-TK1	0	0 - 9,999	feet	
	OF-TK2	0	0 - 9,999		feet
	CJ-LOS	0	3 - 99	seconds	seconds
	PJ-DET	15	4 - 15	seconds	seconds
18	MD-TMR	10	10-99 (0=disable)	10 minutes	10 minutes
19	MIN-WT	0	23-99 (0=disable)	0 seconds	0 seconds
20	FS-DET	0	10-30 (0=disable)	0 minutes	0 minutes
21	POS-RX	0	0 - 74 (0=disable)	0 RX	0 RX
	POS-TM	0	0 - 99**	0 minutes	0 minutes
22	AR-TMR	0	0-80 (0=disable)	0 minutes	0 minutes
47	ATO-RX	dn	UP or dn	UP dn X	UP dn X
48	PF-ENA	UP	UP or dn	UP X dn	UP X dn

***n = not an AX drive (no options available)**

****0 = disable, 99 = continuous**

Shunt Record

West Approach		No Shunt RX	No Shunt Phase	100% Shunt RX	100% Shunt Phase		50% Shunt RX	50% Shunt Phase	LIA Added *1 to 9
Track 1	Normal								
	Standby								
Track 2	Normal	100	77	95	79		47	80	+6
	Standby								
East Approach									
Track 1	Normal	100	69	95	73		47	77	-1
	Standby								
Track 2	Normal								
	Standby								

SII 10 APR 2015

PROPOSED
DESIGN NO. 15-0124
RED-IN YELLOW-OUT

AS INSTALLED
DATE ____
BY ____
(PRINT NAME)

PROPOSED D	M	Y	REVISIONS	D	C	COMPLETED D	M	Y	C
			PLAN REDRAWN			15	12	14	DJB
10	04	15	M.018.19 INTERCONNECT	NAD	MRB				

REGION SOUTHERN
SUB. LEITHTON 332

SIGNALS AND COMMUNICATIONS HOMEWOOD
10 JUNE 2008
DES. TWH
CH. TWH

HXP SETUP SHEET

AURORA, IL
87TH ST

LEI-017.68-03
DOT# 260 563T

REVISIONS

NO.	DATE	BY	DESCRIPTION	APP. BY
1				
2				
3				
4				
5				

SIEMENS INDUSTRY INC
DES.: DJB DATE: 15/12/2014 JOB NO.: JXXE04728
CKD.: SIA ISSUE DATE: N/A EST. NO.: GDE000274
DRN.: DJB PLAN NO.: N/A SHEET 3 OF 18
P TIME: 10:15 P DATE: $$PLOT_DATE CAD ID.: LEI-017.68-03

SIEMENS INDUSTRY INC
LOUISVILLE DIVISION, LOUISVILLE, KY

lei-017.68-03.dgn
27-APR-2015

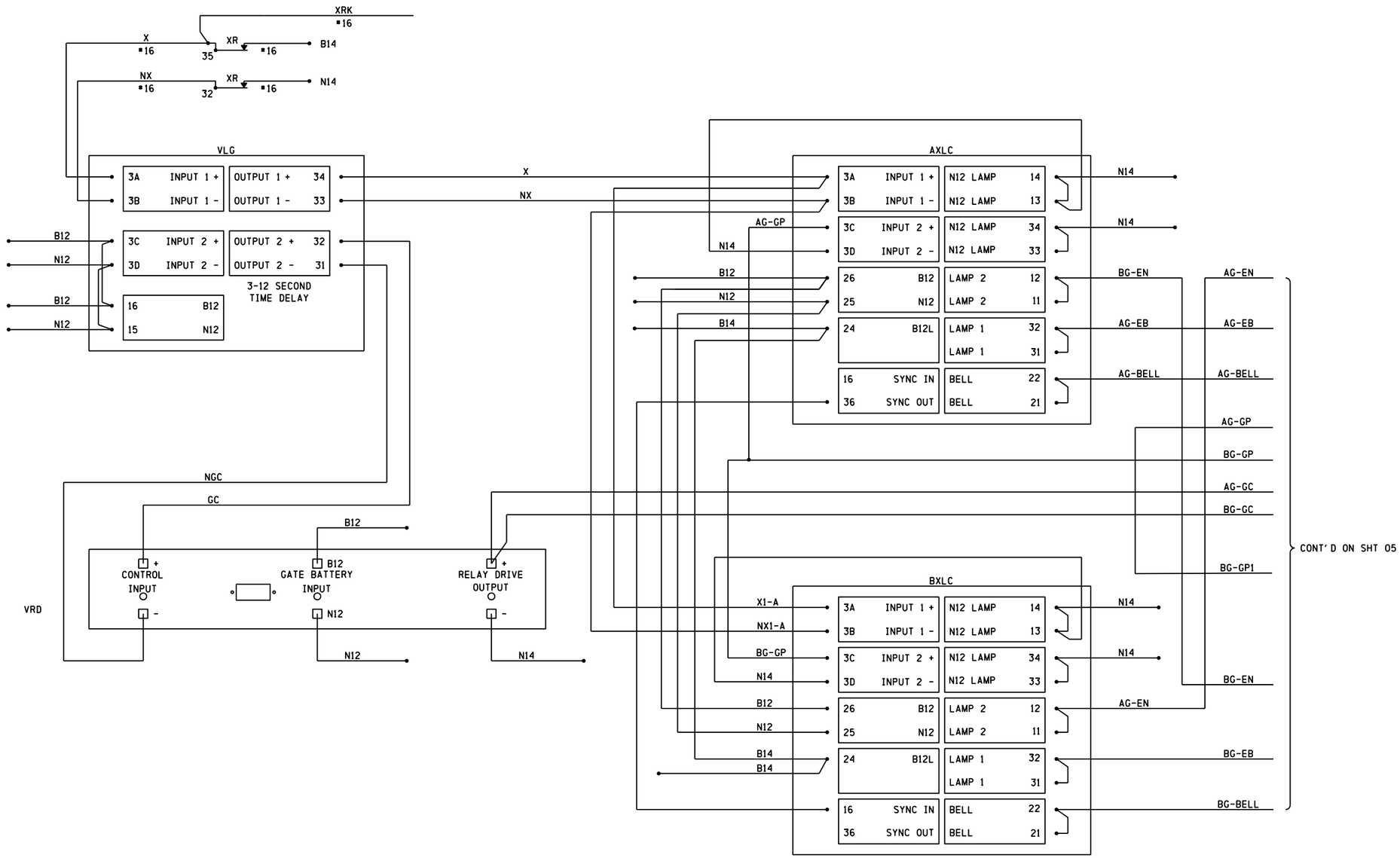

NOTES

1) ALL WIRING THIS SHEET TO BE
*10 UNLESS OTHERWISE SHOWN

2) BEFORE PLACING IN SERVICE VERIFY VLG
IS SET FOR 3 SECOND DELAY TIME

REVISIONS				
NO.	DATE	BY	DESCRIPTION	APP. BY
1				
2				
3				
4				
5				

SIEMENS INDUSTRY INC			
DES. : DJB	DATE: 15/12/2014	JOB NO. : UXXE04728	
CKD. : SIA	ISSUE DATE: N/A	EST. NO. :QDE000274	
DRN. : DJB	PLAN NO. :N/A	SHEET 4 OF 18	
P TIME:10:15	P DATE: $$PLOT_DATE	CAD ID. : LEI-017.68-04	

PROPOSED			REVISIONS	D	C	COMPLETED			C
D	M	Y				D	M	Y	
			PLAN REDRAWN			15	12	14	DJB

REGION SOUTHERN
SUB. LEITHTON 332

SIGNALS AND COMMUNICATIONS HOMEWOOD
DES. BJH
02 DECEMBER 2001
CH. JJ

LOGIC GATE &
LAMP CONTROL WIRING
AURORA, IL
87TH ST

LEI-017.68-04

DOT#260 563T

SIEMENS INDUSTRY INC
LOUISVILLE DIVISION, LOUISVILLE, KY

lei-017.68-04.dgn
27-APR-2015

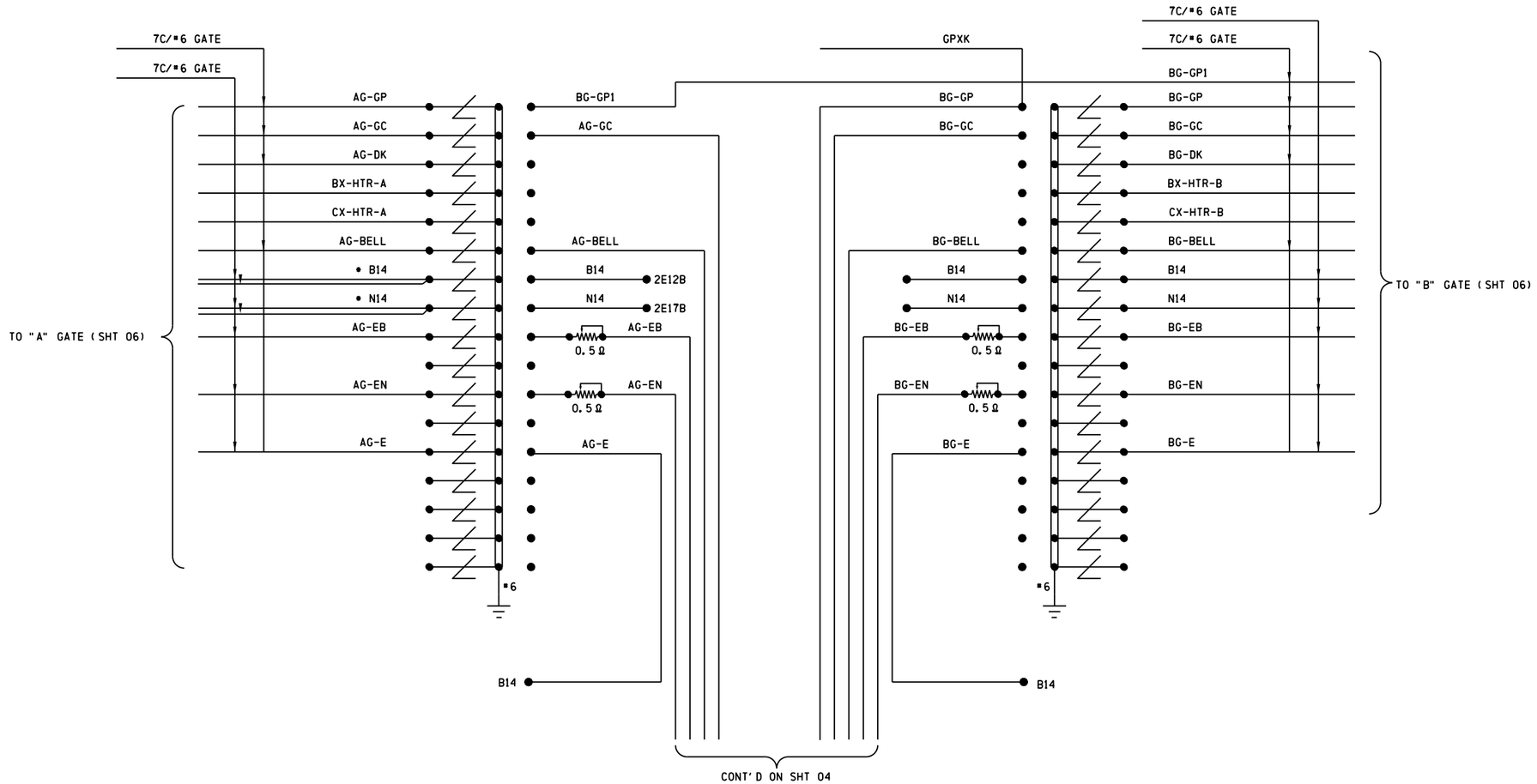

NOTES

1) ALL WIRING THIS SHEET TO BE #10 UNLESS OTHERWISE SHOWN
2) GDK'S AND 110 VOLT HEATERS ARE NOT CONNECTED IN THE CABIN

• B14 & N14 TO A GATE DOUBLED UP FOR VOLTAGE DROP PER BOOK

REVISIONS			
NO.	DATE	BY	DESCRIPTION	APP. BY
1				
2				
3				
4				
5				

SIEMENS INDUSTRY INC			
DES.: DJB	DATE: 15/12/2014	JOB NO.: JXXE04728	
CKD.: SIA	ISSUE DATE: N/A	EST. NO.: GDE000274	
DRN.: DJB	PLAN NO.: N/A	SHEET 5 OF 18	
P TIME: 10:15	P DATE: $$PLOT_DATE	CAD ID.: LEI-017.68-05	

PROPOSED D	M	Y	REVISIONS	D	C	COMPLETED D	M	Y	C
			PLAN REDRAWN			15	12	14	DJB

REGION SOUTHERN

SUB. LEITHTON 332

SIGNALS AND COMMUNICATIONS HOMEWOOD

DES. BJH

02 DECEMBER 2001

CH. JJ

CABLE & ARRESTOR PANEL WIRING

AURORA, IL

87TH ST

LEI-017.68-05

DOT#260 563T

SIEMENS INDUSTRY INC
LOUISVILLE DIVISION, LOUISVILLE, KY

lei-017.68-05.dgn
27-APR-2015

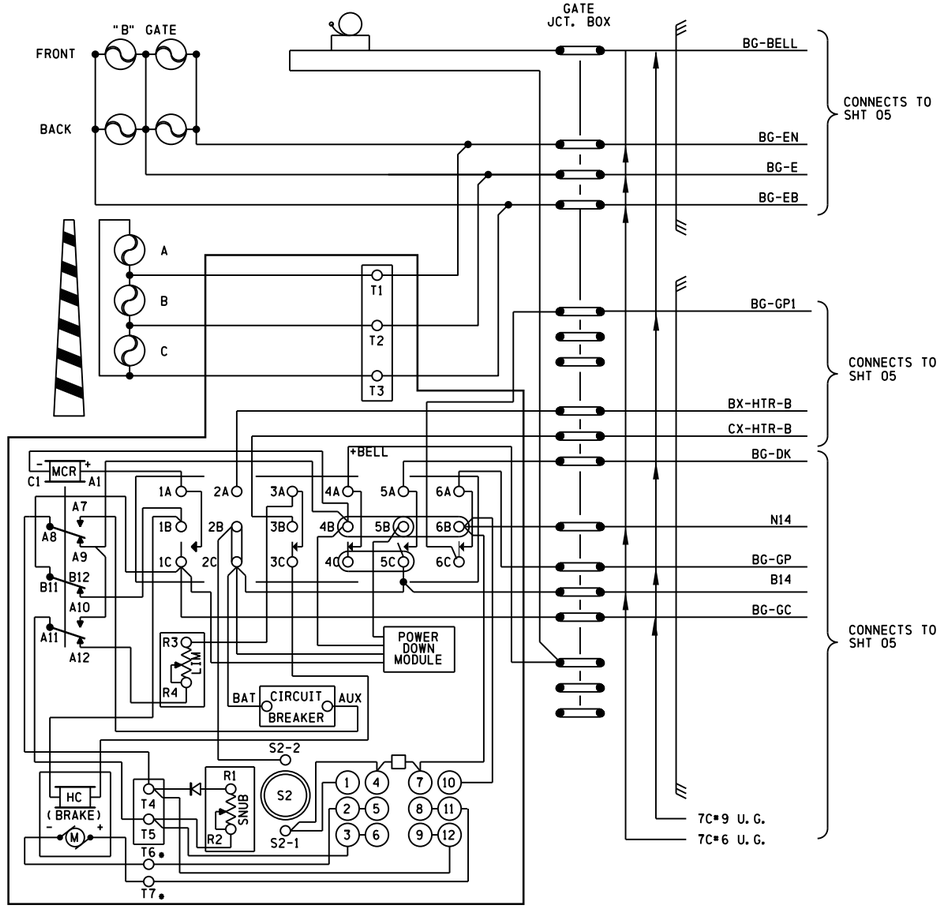

US & S MODEL 95 GATE MECHANISM

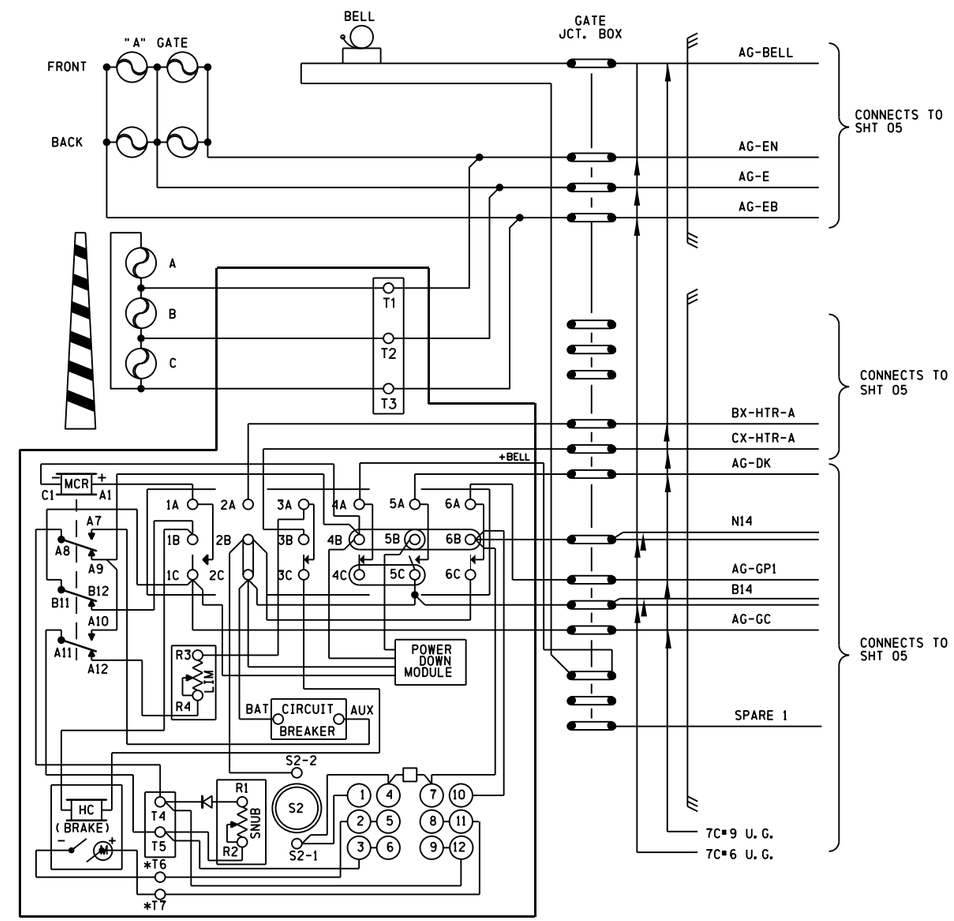

US & S MODEL 95 GATE MECHANISM

(SHOWN WITH MECHANISM IN VERTICAL POS.)

CONTACT	CLOSED	FUNCTION
1	0° -89°	MOTOR UP
2		VACANT SLOT
3	45° -90°	MOTOR DN
4	5° -90°	BELL
5	0° -5°	GATE DN IND
6	83° -90°	FLASH'G LIGHT

NOTES

1) JUMPERS MUST BE ADDED TO EACH GATE AS SHOWN
2) SWITCHES S1 & S2 ARE FOR GATE ARM REHANG POWER DOWN
3) ALL LIGHT WIRES THIS PAGE ARE TO BE 10 AWG.
4) GATE HEATER CONNECTED BETWEEN 2A & 3B
GATE HEATERS TO BE INSTALLED ON ARRIVAL

REVISIONS				
NO.	DATE	BY	DESCRIPTION	APP. BY
1				
2				
3				
4				
5				

SIEMENS INDUSTRY INC

DES.: DJB	DATE: 15/12/2014	JOB NO.: JXXE04728
CKD.: SIA	ISSUE DATE: N/A	EST. NO.: QDE000274
DRN.: DJB	PLAN NO.: N/A	SHEET 6 OF 18
P TIME: 10:15	P DATE: $$PLOT_DATE	CAD ID.: LEI-017.68-06

PROPOSED D	M	Y	REVISIONS	D	C	COMPLETED D	M	Y	C
			PLAN REDRAWN			15	12	14	DJB

REGION SOUTHERN
SUB. LEITHTON 332

SIGNALS AND COMMUNICATIONS HOMEWOOD
02 DECEMBER 2001
DES. BJH
CH. JJ

CROSSING GATE WIRING
AURORA, IL
87TH ST

LEI-017.68-06
DOT#260 563T

SIEMENS INDUSTRY INC
LOUISVILLE DIVISION, LOUISVILLE, KY

lei-017.68-06.dgn
27-APR-2015

REVISIONS				
NO.	DATE	BY	DESCRIPTION	APP. BY
1				
2				
3				
4				
5				

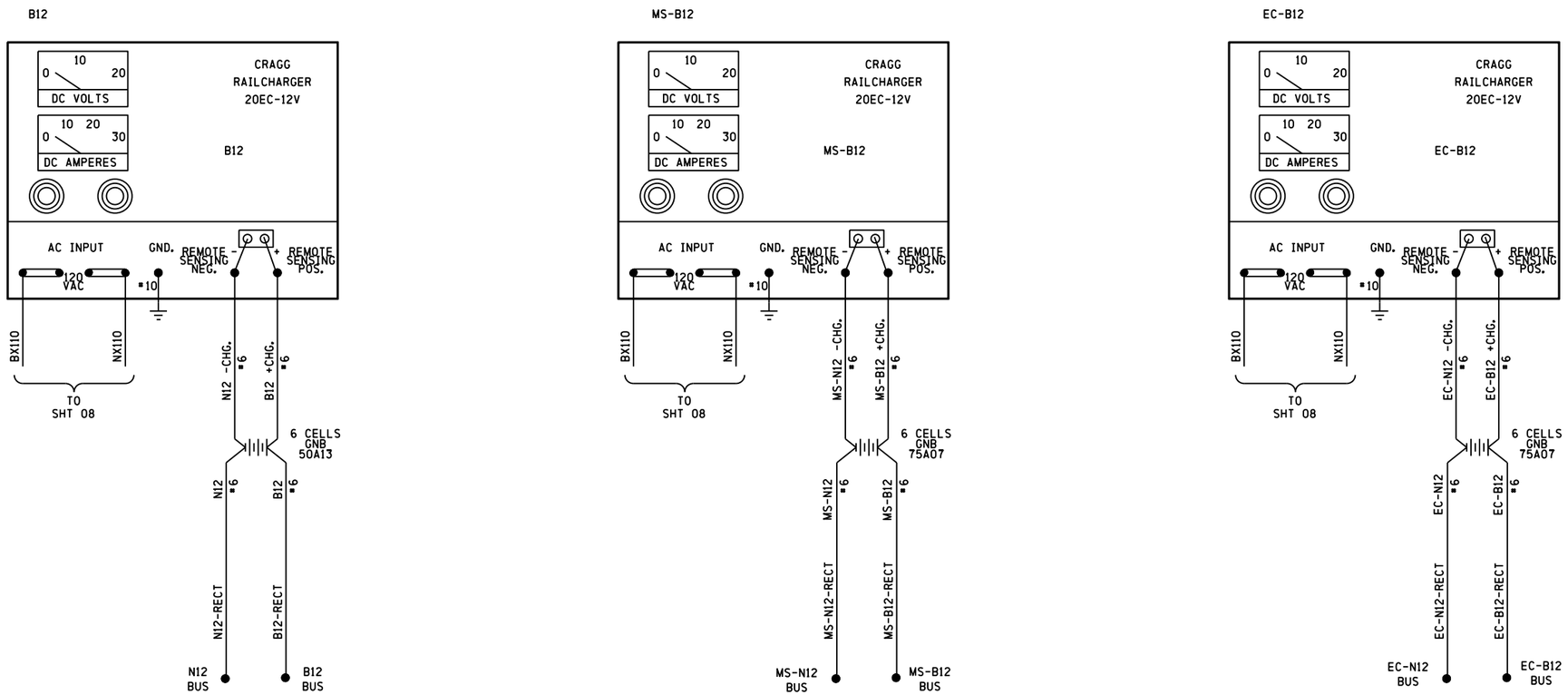

SIEMENS INDUSTRY INC	
DES. : DJB	DATE: 15/12/2014
CKD. : SIA	ISSUE DATE: N/A
DRN. : DJB	PLAN NO. :N/A
P TIME:10:15	P DATE: $$PLOT_DATE
JOB NO. : JXXE04728	
EST. NO. :QDE000274	
SHEET 7 OF 18	
CAD ID. : LEI-017.68-07	

PROPOSED D	M	Y	REVISIONS	D	C	COMPLETED D	M	Y	C
			PLAN REDRAWN			15	12	14	DJB

REGION SOUTHERN
SUB. LEITHTON 332

SIGNALS AND COMMUNICATIONS HOMEWOOD
DES. BJH
02 DECEMBER 2001
CH. JJ

BATTERY BUS & RECTIFIER WIRING

AURORA, IL
87TH ST

LEI-017.68-07

DOT#260 563T

SIEMENS INDUSTRY INC
LOUISVILLE DIVISION, LOUISVILLE, KY

lei-017.68-07.dgn
27-APR-2015

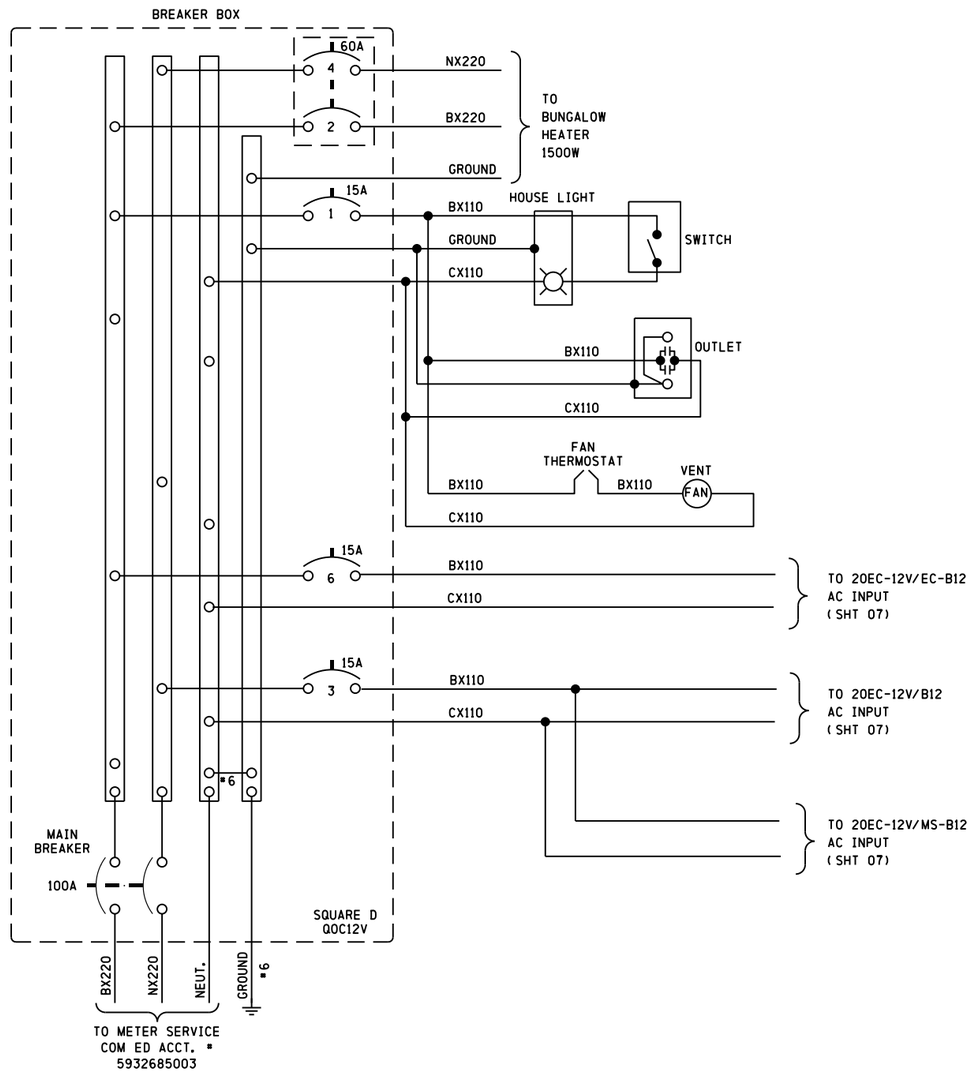

REVISIONS				
NO.	DATE	BY	DESCRIPTION	APP. BY
1				
2				
3				
4				
5				

SIEMENS INDUSTRY INC		
DES. : DJB	DATE: 15/12/2014	JOB NO. : JXXE04728
CKD. : SIA	ISSUE DATE: N/A	EST. NO. :QDE000274
DRN. : DJB	PLAN NO. :N/A	SHEET 8 OF 18
P TIME:10:15	P DATE: $$PLOT_DATE	CAD ID. :LEI-017.68-08

PROPOSED D	M	Y	REVISIONS	D	C	COMPLETED D	M	Y	C
			PLAN REDRAWN			15	12	14	DJB

REGION SOUTHERN
SUB. LEITHTON 332

SIGNALS AND COMMUNICATIONS HOMEWOOD
02 DECEMBER 2001
DES. BJH
CH. JJ

AC POWER DISTRIBUTION

AURORA, IL
87TH ST

LEI-017.68-08

DOT#260 563T

SIEMENS INDUSTRY INC
LOUISVILLE DIVISION, LOUISVILLE, KY

lei-017.68-08.dgn
27-APR-2015

REVISIONS				
NO.	DATE	BY	DESCRIPTION	APP. BY
1				
2				
3				
4				
5				

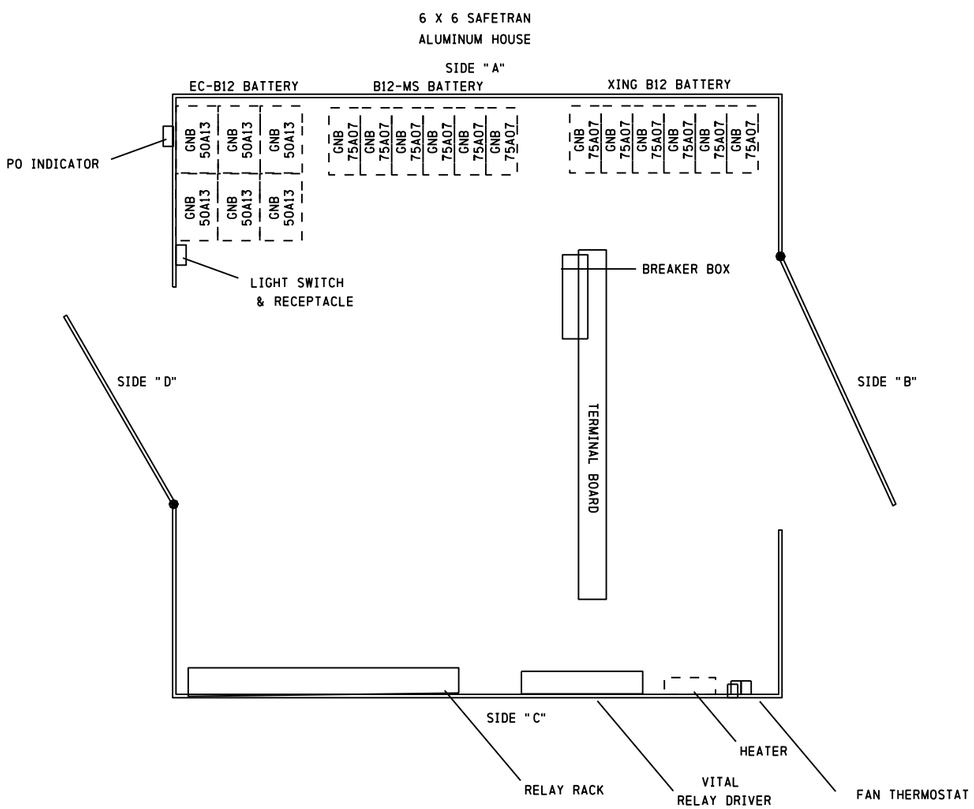

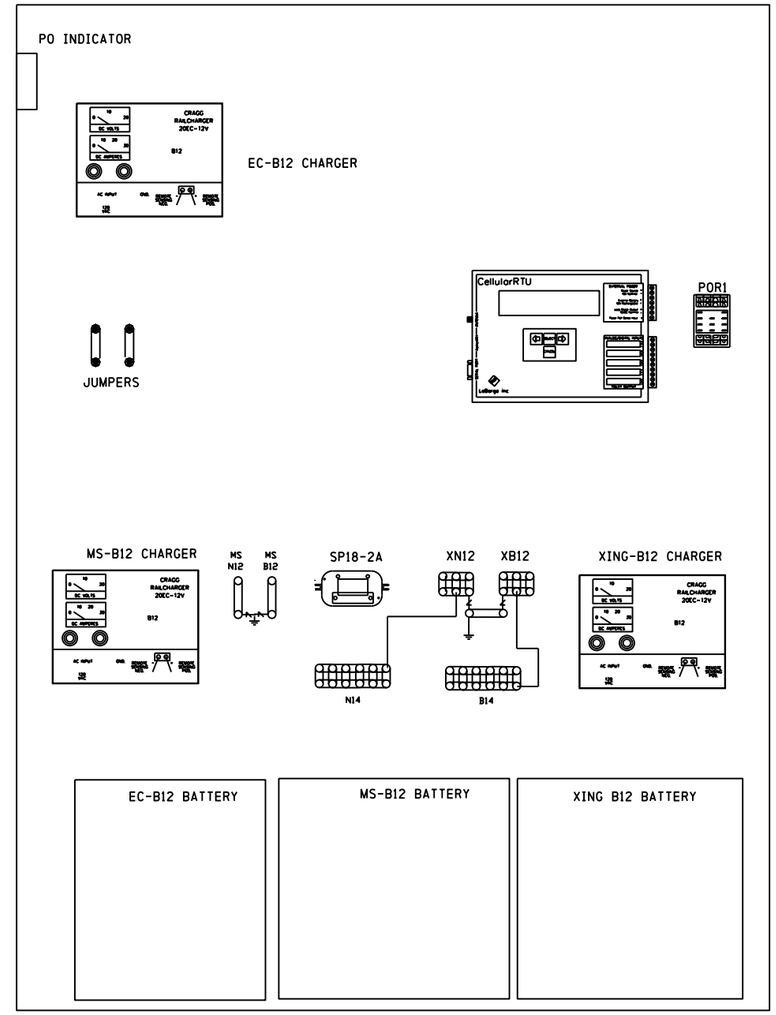

SIDE 'A' DETAIL

lei-017.68-09.dgn
27-APR-2015

SIEMENS INDUSTRY INC			
DES.: DJB	DATE: 15/12/2014	JOB NO.: JXXE04728	
CKD.: SIA	ISSUE DATE: N/A	EST. NO.: IQDE000274	
DRN.: DJB	PLAN NO.: N/A	SHEET 9 OF 18	
P TIME: 10:15	P DATE: $$PLOT_DATE	CAD ID.: LEI-017.68-09	

PROPOSED			REVISIONS	D	C	COMPLETED			C
D	M	Y				D	M	Y	
			PLAN REDRAWN			15	12	14	DJB

REGION SOUTHERN
SUB. LEITHTON 332

SIGNALS AND COMMUNICATIONS HOMEWOOD
02 DECEMBER 2001
DES. BJH
CH. JJ
HOUSE LAYOUT AND SIDE 'A' DETAIL

AURORA, IL
87TH ST

LEI-017.68-09

DOT# 260 563T

SIEMENS INDUSTRY INC
LOUISVILLE DIVISION, LOUISVILLE, KY

REVISIONS				
NO.	DATE	BY	DESCRIPTION	APP. BY
1				
2				
3				
4				
5				

lei-017.68-10.dgn
27-APR-2015

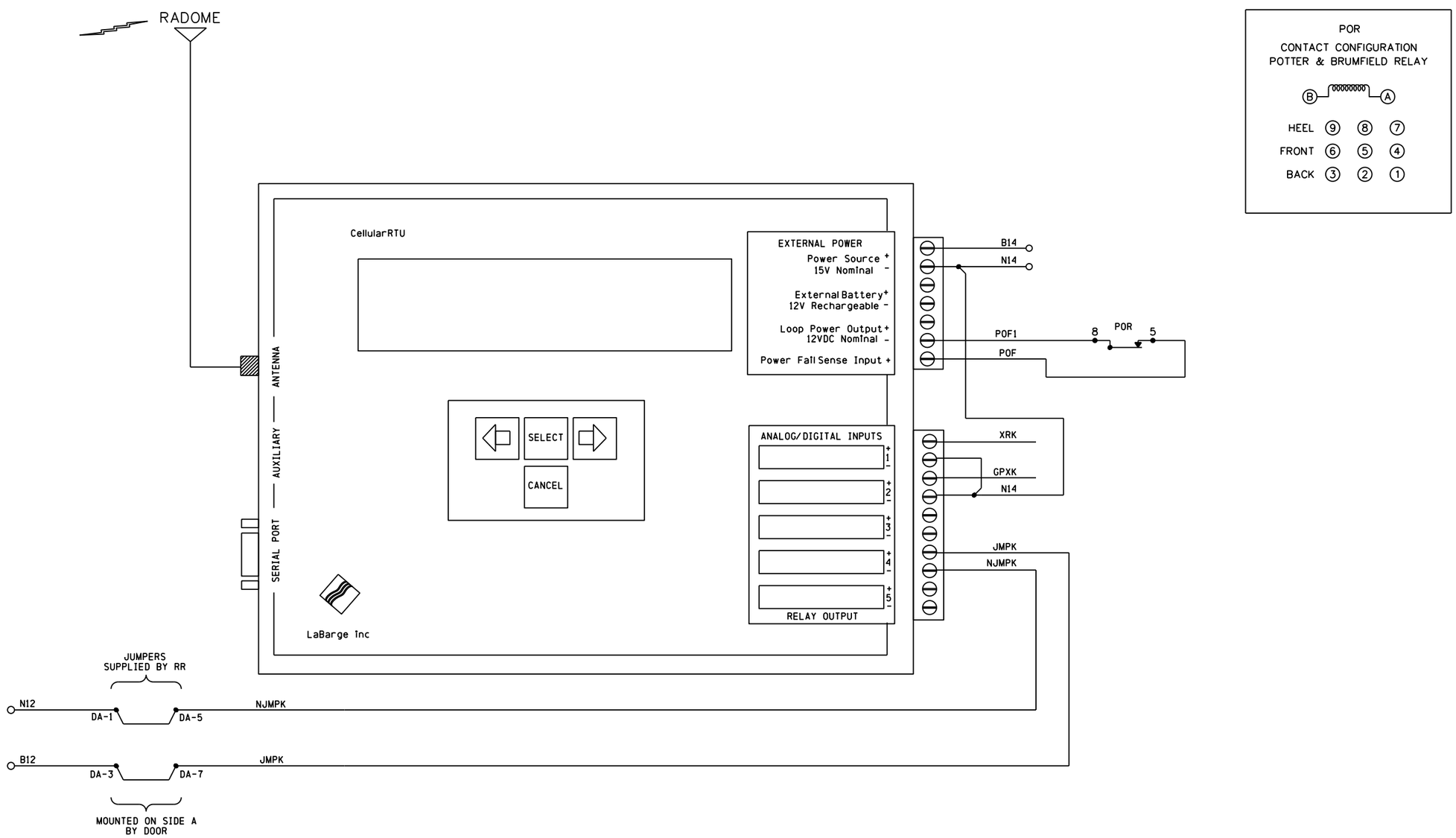

SIEMENS INDUSTRY INC	
DES. : DJB	DATE: 15/12/2014
CKD. : SIA	ISSUE DATE: N/A
DRN. : DJB	PLAN NO. :N/A
P TIME:10:15	P DATE: $$PLOT_DATE
JOB NO. : JXXE04728	
EST. NO. :QDE000274	
SHEET 10 OF 18	
CAD ID. : LEI-017.68-10	

PROPOSED			REVISIONS	D	C	COMPLETED			C
D	M	Y				D	M	Y	
			PLAN REDRAWN			15	12	14	DJB

REGION SOUTHERN
SUB. LEITHTON 332

SIGNALS AND COMMUNICATIONS HOMEWOOD
DES. TWH
02 DECEMBER 2001
CH. TWH

RTU WIRING

AURORA, IL
87TH ST

LEI-017.68-10

DOT#260 563T

SIEMENS INDUSTRY INC
LOUISVILLE DIVISION, LOUISVILLE, KY

REVISIONS				
NO.	DATE	BY	DESCRIPTION	APP. BY
1				
2				
3				
4				
5				

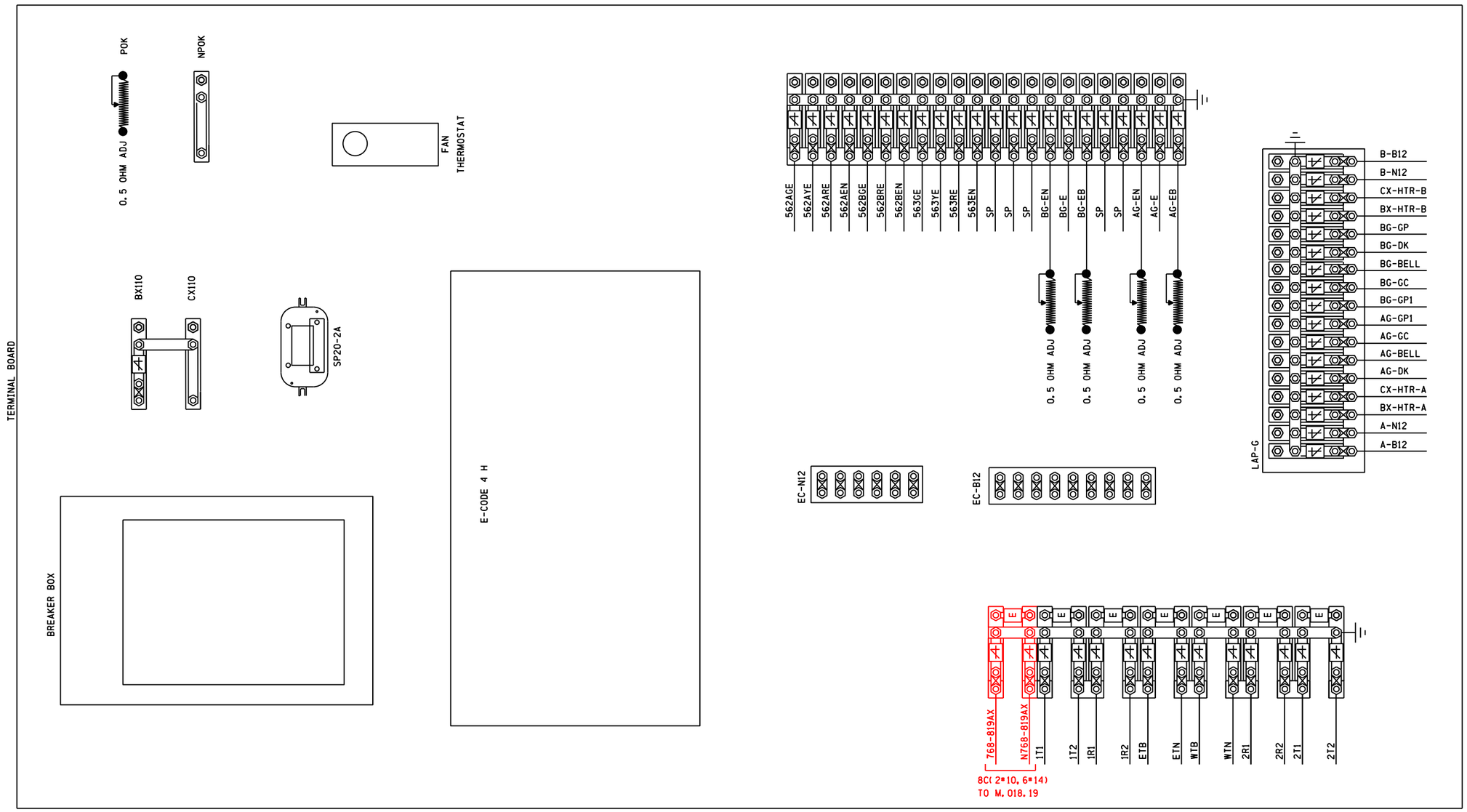

lei-017.68-11.dgn
27-APR-2015

SII 10 APR 2015

PROPOSED
DESIGN NO. 15-0124
RED-IN YELLOW-OUT

AS INSTALLED
DATE _____
BY _____
(PRINT NAME)

PROPOSED D	PROPOSED M	PROPOSED Y	REVISIONS	D	C	COMPLETED D	COMPLETED M	COMPLETED Y	C
			PLAN REDRAWN			15	12	14	DJB
10	04	15	M.018.19 INTERCONNECT	NAD	MRB				

REGION SOUTHERN
SUB. LEITHTON 332

SIGNALS AND COMMUNICATIONS HOMEWOOD
DES. BJH
02 DECEMBER 2001
CH. JJ
SIDE 'B' TERMINAL BOARD DETAIL
AURORA, IL
87TH ST
LEI-017.68-11
DOT#260 563T

SIEMENS INDUSTRY INC

DES.: DJB	DATE: 15/12/2014	JOB NO.: JXXE04728	
CKD.: SIA	ISSUE DATE: N/A	EST. NO.: 1QDE000274	
DRN.: DJB	PLAN NO.: N/A	SHEET 11 OF 18	
P TIME: 10:15	P DATE: $$PLOT_DATE	CAD ID.: LEI-017.68-11	

SIEMENS INDUSTRY INC
LOUISVILLE DIVISION, LOUISVILLE, KY

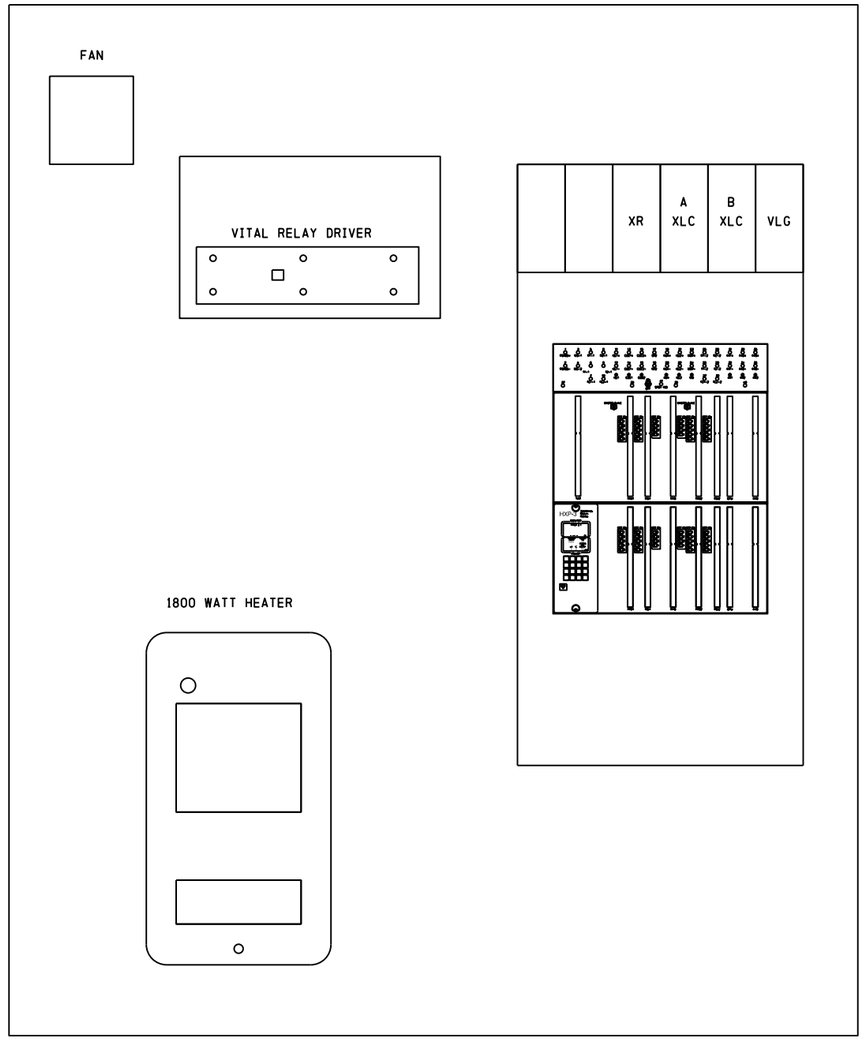

REVISIONS			
NO.	DATE	BY	DESCRIPTION	APP. BY
1				
2				
3				
4				
5				

SIEMENS INDUSTRY INC

DES.: DJB	DATE: 15/12/2014	JOB NO.: JXXE04728
CKD.: SIA	ISSUE DATE: N/A	EST. NO.: QDE000274
DRN.: DJB	PLAN NO.: N/A	SHEET 12 OF 18
P TIME: 10:15	P DATE: $$PLOT_DATE	CAD ID.: LEI-017.68-12

PROPOSED			REVISIONS	D	C	COMPLETED			C
D	M	Y				D	M	Y	
			PLAN REDRAWN			15	12	14	DJB

REGION SOUTHERN

SUB. LEITHTON 332

CN

SIGNALS AND COMMUNICATIONS HOMEWOOD

DES. BJH

02 DECEMBER 2001

CH. JJ

HOUSE LAYOUT - SIDE 'C' DETAIL

AURORA, IL

87TH ST

LEI-017.68-12

DOT#260 563T

SIEMENS INDUSTRY INC
LOUISVILLE DIVISION, LOUISVILLE, KY

lei-017.68-12.dgn
27-APR-2015

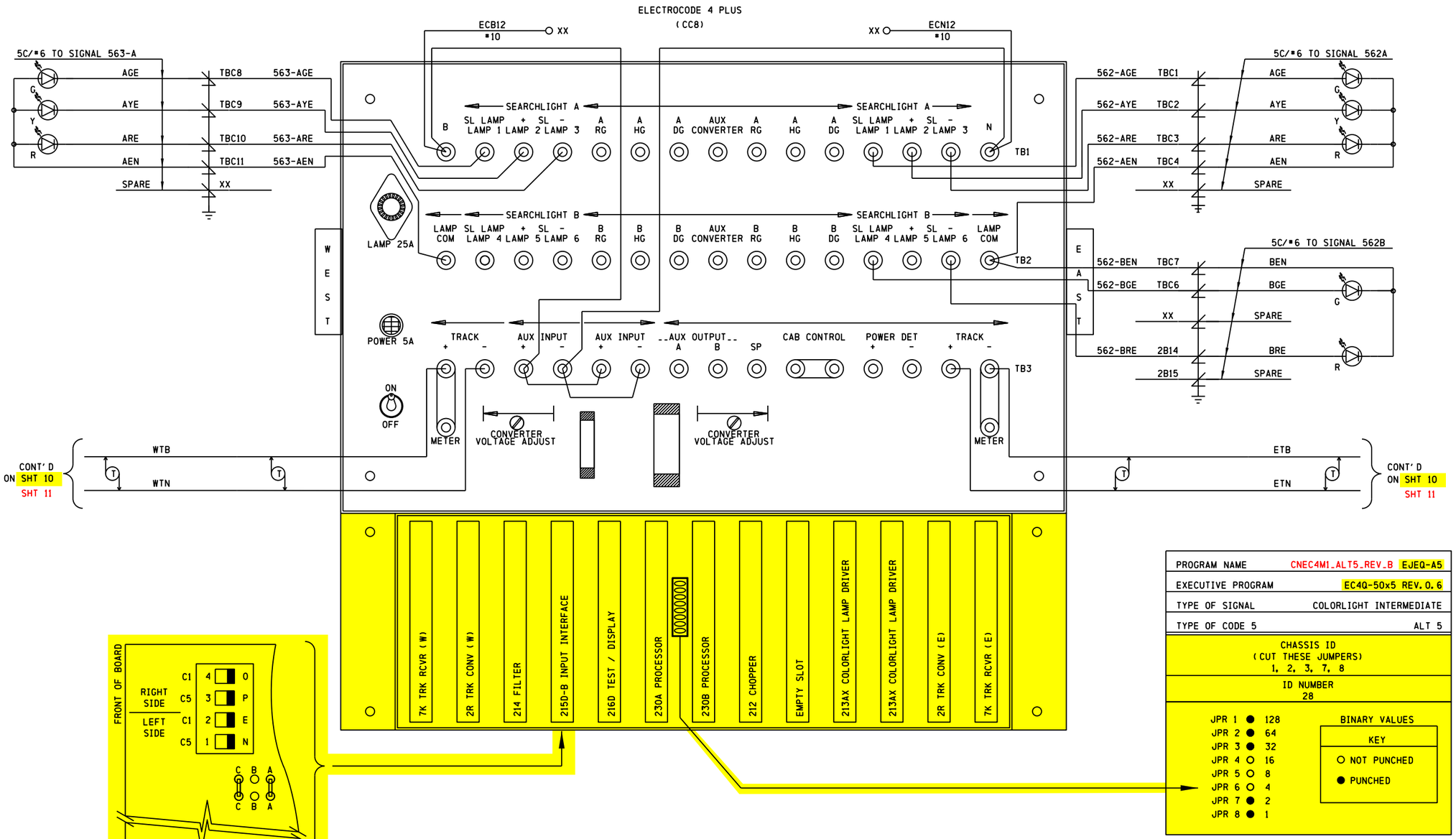

lei-017.68-13.dgn
27-APR-2015

NO.	DATE	BY	DESCRIPTION	APP. BY
1				
2				
3				
4				
5				

REVISIONS

SIEMENS INDUSTRY INC

DES.: DJB	DATE: 15/12/2014	JOB NO.: JXXE04728	
CKD.: SIA	ISSUE DATE: N/A	EST. NO.: 0DE000274	
DRN.: DJB	PLAN NO.: N/A	SHEET 13 OF 18	
P TIME: 10:15	P DATE: $$PLOT_DATE	CAD ID.: LEI-017.68-13	

NOTE

1) ALL WIRING THIS SHEET TO BE #10AWG UNLESS OTHERWISE NOTED

SII 15 DEC 2014

PROPOSED
DESIGN NO. PTC-012
RED-IN YELLOW-OUT

AS INSTALLED
DATE
BY
(PRINT NAME)

PROPOSED D	M	Y	REVISIONS	D	C	COMPLETED D	M	Y	C
			PLAN REDRAWN			15	12	14	DJB
15	12	14	PTC UPGRADE	DJB	SIA				

REGION SOUTHERN
SUB. LEITHTON 332

SIGNALS AND COMMUNICATIONS HOMEWOOD
15 JUNE 2006
DES. TWH
CH. TWH

ELECTROCODE & SIGNAL
562/563 WIRING
AURORA, IL
87TH ST

LEI-017.68-13

DOT#260 563T

SIEMENS INDUSTRY INC
LOUISVILLE DIVISION, LOUISVILLE, KY

REVISIONS			
NO.	DATE	BY	DESCRIPTION	APP. BY
1				
2				
3				
4				
5				

lei-017.68-14.dgn
27-APR-2015

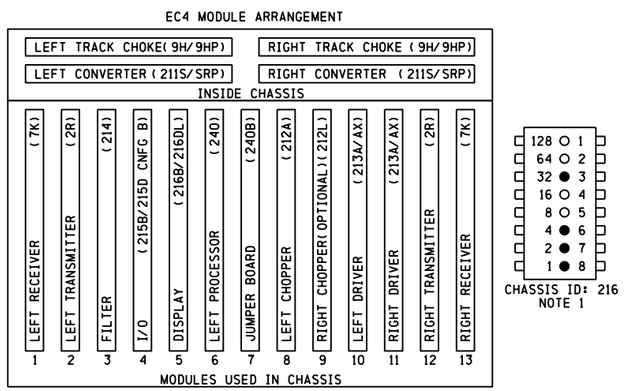

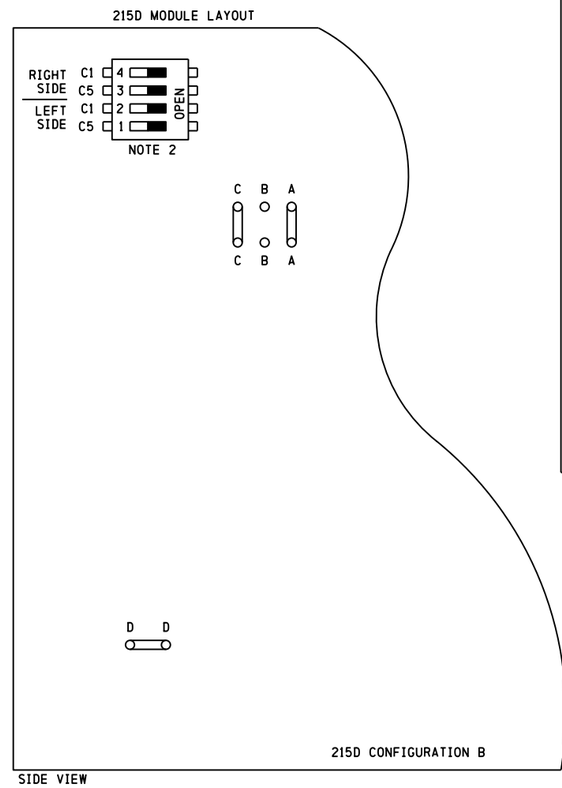

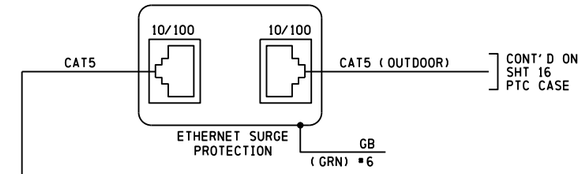

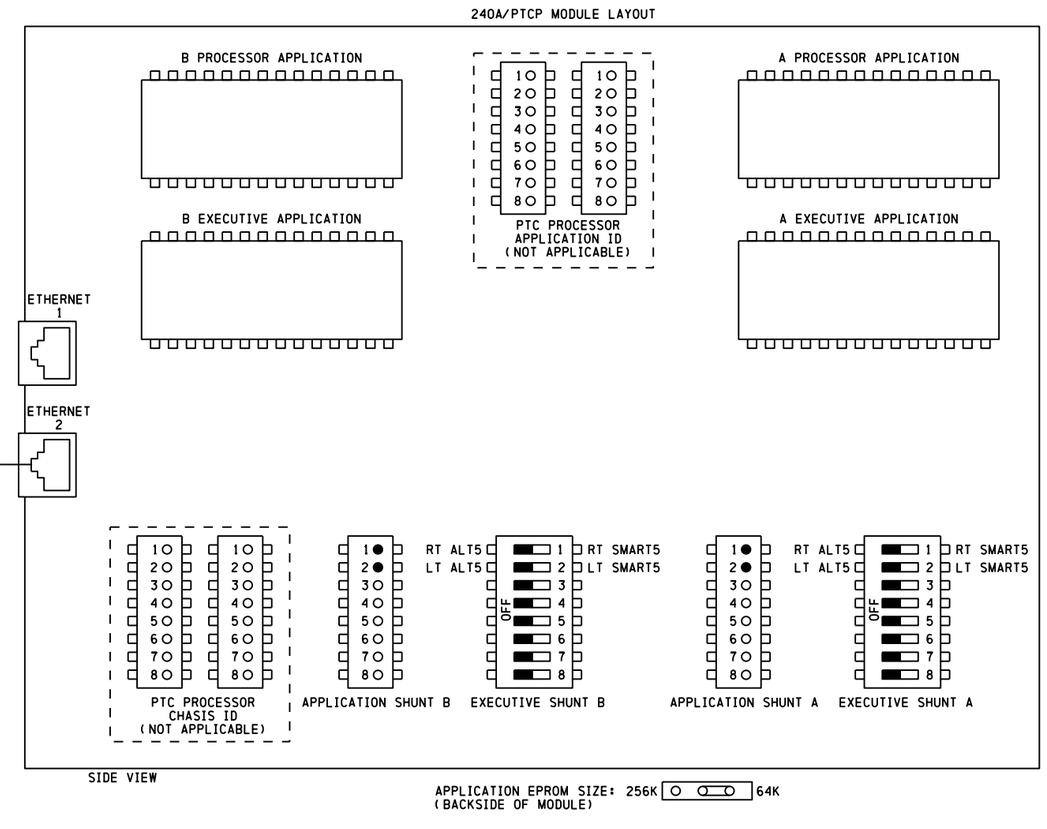

NOTES
1) ● = TAB PUNCHED OUT (BROKEN)
○ = TAB INTACT (MADE)
2) CODE 5 SETTINGS

LEFT		RIGHT	
LEFT C1 OPEN LEFT C5 OPEN	NO CODE 5 OUT THE LEFT TRACK	RIGHT C1 OPEN RIGHT C5 OPEN	NO CODE 5 OUT THE RIGHT TRACK
LEFT C1 OPEN LEFT C5 CLOSED	REPEAT CODE 5 FROM THE RIGHT TRACK OUT THE LEFT TRACK	RIGHT C1 OPEN RIGHT C5 CLOSED	REPEAT CODE 5 FROM THE LEFT TRACK OUT THE RIGHT TRACK
LEFT C1 CLOSED LEFT C5 OPEN	TRANSMIT CODE 5 OUT THE LEFT TRACK WHEN RECEIVING CODE 1 ON THE RIGHT TRACK	RIGHT C1 CLOSED RIGHT C5 OPEN	TRANSMIT CODE 5 OUT THE RIGHT TRACK WHEN RECEIVING CODE 1 ON THE LEFT TRACK
LEFT C1 CLOSED LEFT C5 CLOSED	ALWAYS TRANSMIT CODE 5 OUT THE LEFT TRACK	RIGHT C1 CLOSED RIGHT C5 CLOSED	ALWAYS TRANSMIT CODE 5 OUT THE RIGHT TRACK

240 CARD APPLICATION SHUNT ● = TAB PUNCHED (BROKEN) ○ = TAB INTACT (MADE)

	FUNCTION IF NOT PUNCHED	FUNCTION IF PUNCHED
●1	LEFT REPEATER ENABLED	LEFT SIGNAL ENABLED
●2	RIGHT REPEATER ENABLED	RIGHT SIGNAL ENABLED
○3	NO LEFT TRACK EL LOCK OR ENTER SIGNAL	LEFT TRACK EL LOCK OR ENTER SIGNAL
○4	NO RIGHT TRACK EL LOCK OR ENTER SIGNAL	RIGHT TRACK EL LOCK OR ENTER SIGNAL
○5	NO AIM-2 WIRED FOR ELECTRIC LOCK	AIM-2 WIRED W/LT & REL FOR ELECTRIC LOCK
○6	LONG TIMER SET FOR 10 MIN	LONG TIMER SET TO 14 MIN
○7	APPROACH LIT	APPROACH LIT WITH LOSS OF "H" CODE
○8	CODE 7 OUT WHEN CODE 3 RECEIVED	CODE 8 SENT FOR ADV APP DIV, IF REQUIRED

SII 15 DEC 2014

PROPOSED
DESIGN NO. PTC-012
RED-IN YELLOW-OUT

AS INSTALLED
DATE _____
BY _____
(PRINT NAME)

PROPOSED			REVISIONS	D	C	COMPLETED			C
D	M	Y				D	M	Y	

REGION SOUTHERN
SUB. LEITHTON 332
SIGNALS AND COMMUNICATIONS HOMEWOOD
15 DECEMBER 2014
DES. DJB
CH. SIA
EC4 CHASSIS LAYOUT & MODULE CONFIGURATIONS
AURORA, IL
87TH ST
LEI-017.68-14

SIEMENS INDUSTRY INC			
DES.: DJB	DATE: 15/12/2014	JOB NO.: JXXE04728	
CKD.: SIA	ISSUE DATE: N/A	EST. NO.: GDE000274	
DRN.: DJB	PLAN NO.: N/A	SHEET 14 OF 18	
P TIME: 10:15	P DATE: $$PLOT_DATE	CAD ID.: LEI-017.68-14	

SIEMENS INDUSTRY INC
LOUISVILLE DIVISION, LOUISVILLE, KY

DOT# 260 563T

SOFTWARE CONFIGURATION PROPERTIES

EXECUTIVE INFORMATION						
EPROM	CHKSUM	CRC	IMAGE NAME	PART NO.	REV.	DATE
A PROC. EXEC	8C14	EA78	EC4Q-PTCA.01	203636-004	00	05/23/13
B PROC. EXEC	0274	B116	EC4Q-PTCB.01	203636-004	00	05/23/13

APPLICATION SOFTWARE INFORMATION						
EPROM	LABEL	CHKSUM	CRC	IMAGE NAME	REV.	DATE
A PROC. APP	1CNEC4M1-ALT5	EDBA	5D6F	CNEC4M1.MAP	B	01/08/15
B PROC. APP	3CNEC4M1-ALT5	EDBA	5D6F	CNEC4M1.MAP	B	01/08/15
ED SHEET	CNEC4M1 ED					

PTC PROCESSOR EXECUTIVE INFORMATION				
PROCESSOR	P/N - VERSION	MODULE	CRC	DATE
A		PTCP		
B		PTCP		
C		PTCP		

PTC SOFTWARE INFORMATION				
FILE	NAME	CRC	REV.	DATE
RULES LIBRARY	CN_USOR_GETS_LIBRARY			
EC4 STATUS NAME	CNEC4M1.MNE	F0B6	B	01/08/15
PTC CONFIG.	LEI_017_68.PTCBCFG			
PTC MAPPING	CNEC4M1.PTCBMAP			

STATUS MSG. BODY USE

DEVICE	START BIT	END BIT
L SIGNAL	00	04
R SIGNAL	05	09

WAYSIDE DEVICES

L SIGNAL

DEVICE TYPE	EC4-EL1A-CL
DEVICE STATUS OFFSET	0
MIN. DEBOUNCE TIME	0
DEFAULT DEBOUNCE TIME	0
MAX. DEBOUNCE TIME	0

APPLICABILITY PROPERTY	ENABLED	FP
NUMBER PLATE	T	□
LOW SIGNAL	F	□
ROUTE SIG.	T	□
SPEED SIG.	F	□
RULES 833-844	F	□

R SIGNAL

DEVICE TYPE	EC4-EL1A-CL
DEVICE STATUS OFFSET	5
MIN. DEBOUNCE TIME	0
DEFAULT DEBOUNCE TIME	0
MAX. DEBOUNCE TIME	0

APPLICABILITY PROPERTY	ENABLED	FP
NUMBER PLATE	T	□
LOW SIGNAL	F	□
ROUTE SIG.	T	□
SPEED SIG.	F	□
RULES 833-844	F	□

GENERAL WIU SETTINGS

WIU ADDRESS	710333217005
BEACON CONTINUOUS	■
BEACON ON CHANGE	□
BEACON RATE	1000 mSEC
BEACON BIT TIME	300 SEC
BEACON END TIME	120 SEC
MAX. BEACON INTERVAL	900 SEC
TIME ZONE	0 HRS FROM GMT
OBSERVE DST	■
DST START	MONTH MAR WEEK 2
DST END	MONTH NOV WEEK 1
TIME SYNC SOURCE	EMP
EMP TIME MULTICAST IP ADD.	239.255.0.4
EMP TIME MULTICAST PORT	32768

PTC TIME SETTINGS

TIME MESSAGES BEFORE SENDING WSM	3
IGNORED TIME DIFFERENCE	3 SEC
MAX. TIME CHANGE WITHIN MINUTES	60 MIN
NO TIME SYNC MESSAGE	6 MIN
TIME MESSAGE DEVIATION	1 SEC
MAX. SECONDS TIME CHANGE	3 SEC
LRM MAX. SECONDS TIME DIFFERENCE	3 SEC
PTC TIME RESYNC ENABLE	■

EMP SETTINGS

SOURCE ADDRESS	cn.w.332170:05.wiu
DESTINATION ADDRESS	xx.l.x.000000:tmc
TIME FORMAT	ABSOLUTE
DATA INTEGRITY	APP. SPECIFIC
ENCRYPTION ENABLED	□
COMPRESSION ENABLED	□
TTL(TIMED BEACON)	12 SEC
QoS(TIMED BEACON)	1656
TTL(GET WIU STATUS)	12 SEC
QoS(GET WIU STATUS)	3576

CLASS D SETTINGS

USE SIGNAL SYSTEM ETHERNET SETTINGS	□
DESTINATION IP ADDRESS	10.255.255.20
DESTINATION TCP PORT	8001
MODE	BIDIRECTIONAL
LOG TRAFFIC	□
KEEP ALIVE INTERVAL	9000 mSEC
KEEP ALIVE ACK TIMEOUT	3000 mSEC
DATA ACK ENABLED	■
DATA ACK TIMEOUT	3000 mSEC
CONNECTION TIMEOUT	1000 mSEC
CONNECTION DELAY	1000 mSEC
NAK RETRY LIMIT	2
CONNECTION RETRY LIMIT	-1
RETRANSMIT DELAY	0
RECONNECTION LIMIT	-1

GENERAL ETHERNET SETTINGS

USE SIGNAL SYSTEM ETHERNET SETTINGS	□

PORT	IP ADDRESS	SUBNET MASK
PORT 1	192.168.0.11	255.255.255.0
PORT 2	10.255.255.81	255.255.255.0

DEF. GATEWAY
0.0.0.0

DHCP SERVER SETTINGS

PORT	ENABLED	IP POOL START ADDRESS	IP POOL END ADDRESS	DEFAULT GATEWAY
PORT 1	ENABLED	192.168.0.12	192.168.0.43	0.0.0.0
PORT 2	DISABLED	10.255.255.211	10.255.255.212	0.0.0.0

WEB INTERFACE

PORT	GUI ACCESS LEVEL
PORT 1	READ-WRITE
PORT 2	READ-WRITE

INACTIVITY TIMEOUT	60 MIN
WEB PORT NUMBER	80

	ENABLED	NETWORK	NET MASK
TRUSTED SOURCE 1	DISABLED	0.0.0.0	0.0.0.0
TRUSTED SOURCE 2	DISABLED	0.0.0.0	0.0.0.0

ROUTING TABLE

DESTINATION NET.	IP ADDRESS	SUBNET MASK	GATEWAY	ETHERNET PORT

FIELD TO CONFIRM ALL PTC CONFIGURATION SETTINGS

TO BE CONFIRMED

CONFIRMED

DATE _____

BY _____

(PRINT NAME)

SII 15 DEC 2014

PROPOSED

DESIGN NO. PTC-012

RED-IN YELLOW-OUT

AS INSTALLED

DATE _____

BY _____

(PRINT NAME)

REVISIONS			
NO.	DATE	BY	DESCRIPTION	APP. BY
1				
2				
3				
4				
5				

PROPOSED			REVISIONS	D	C	COMPLETED			C
D	M	Y				D	M	Y	

REGION SOUTHERN

SUB. LEITHTON 332

SIGNALS AND COMMUNICATIONS HOMEWOOD

15 DECEMBER 2014

DES. DJB

CH. SIA

EC4 PTC WIU SOFTWARE CONFIGURATION

AURORA, IL

87TH ST

LEI-017.68-15

DOT# 260 563T

SIEMENS INDUSTRY INC

DES.: DJB | DATE: 15/12/2014 | JOB NO.: JXXE04728

CKD.: SIA | ISSUE DATE: N/A | EST. NO.: GDE000274

DRN.: DJB | PLAN NO.: N/A | SHEET 15 OF 18

P TIME: 10:15 | P DATE: $$PLOT_DATE | CAD ID.: LEI-017.68-15

SIEMENS INDUSTRY INC
LOUISVILLE DIVISION, LOUISVILLE, KY

lei-017.68-15.dgn
27-APR-2015

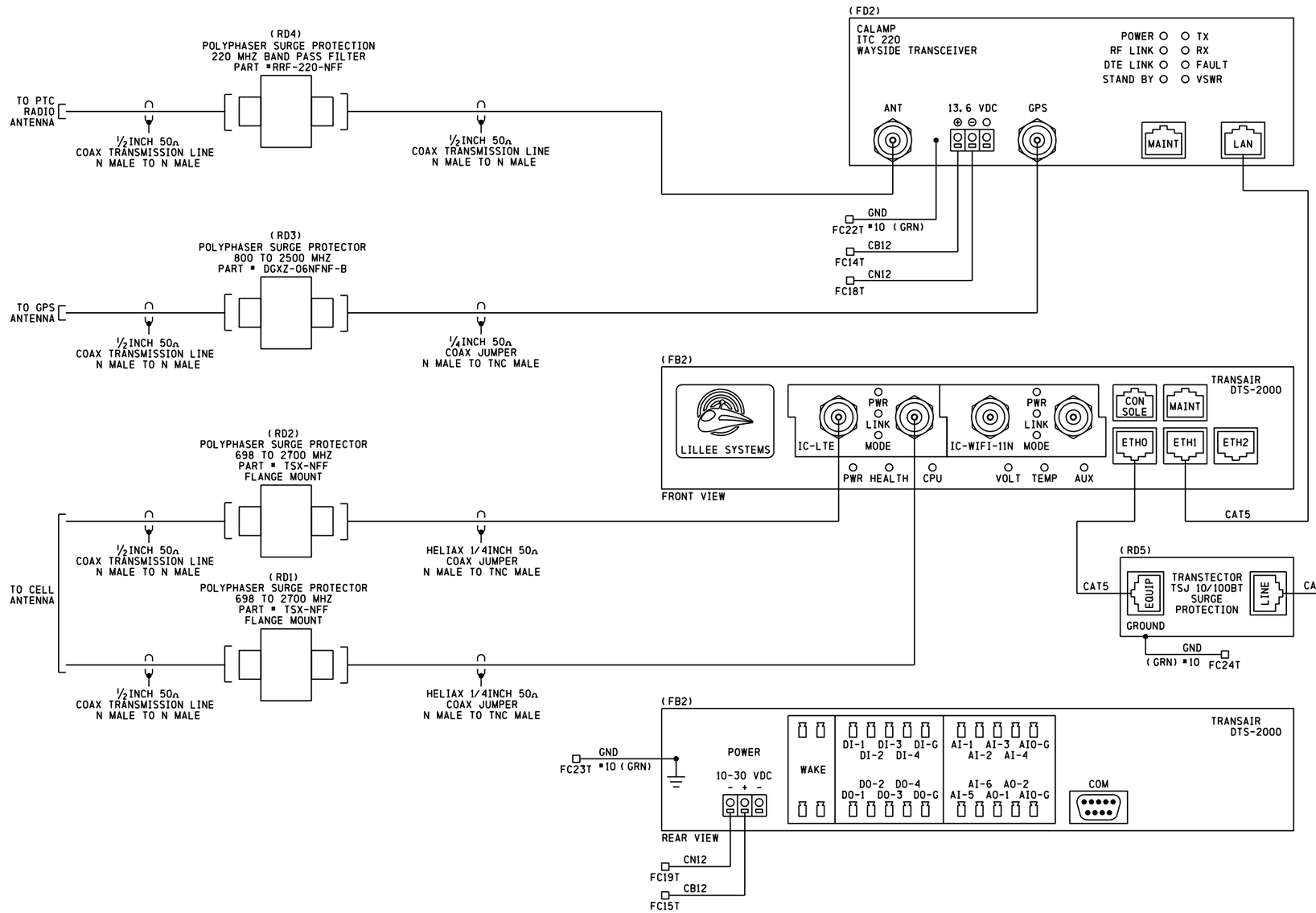

NOTES

1) ALL WIRING #16AWG UNLESS OTHERWISE NOTED.

SII 15 DEC 2014

PROPOSED
DESIGN NO. PTC-012
RED-IN YELLOW-OUT

AS INSTALLED
DATE _____
BY _____
(PRINT NAME)

PROPOSED D	M	Y	REVISIONS	D	C	COMPLETED D	M	Y	C

REGION SOUTHERN
SUB. LEITHTON 332

SIGNALS AND COMMUNICATIONS HOMEWOOD
DES. DJB
15 DECEMBER 2014
CH. SIA

PTC COMM CASE
RADIO, WIU, & WMS CONNECTIONS
AURORA, IL
87TH ST

LEI-017.68-16

DOT#260 563T

SIEMENS INDUSTRY INC
LOUISVILLE DIVISION, LOUISVILLE, KY

SIEMENS INDUSTRY INC
DES.: DJB | DATE: 15/12/2014 | JOB NO.: JXXE04728
CKD.: SIA | ISSUE DATE: N/A | EST. NO.: QDE000274
DRN.: DJB | PLAN NO.: N/A | SHEET 16 OF 18
P TIME: 10:15 | P DATE: $$PLOT_DATE | CAD ID.: LEI-017.68-16

REVISIONS

NO.	DATE	BY	DESCRIPTION	APP. BY
1				
2				
3				
4				
5				

lei-017.68-16.dgn
27-APR-2015

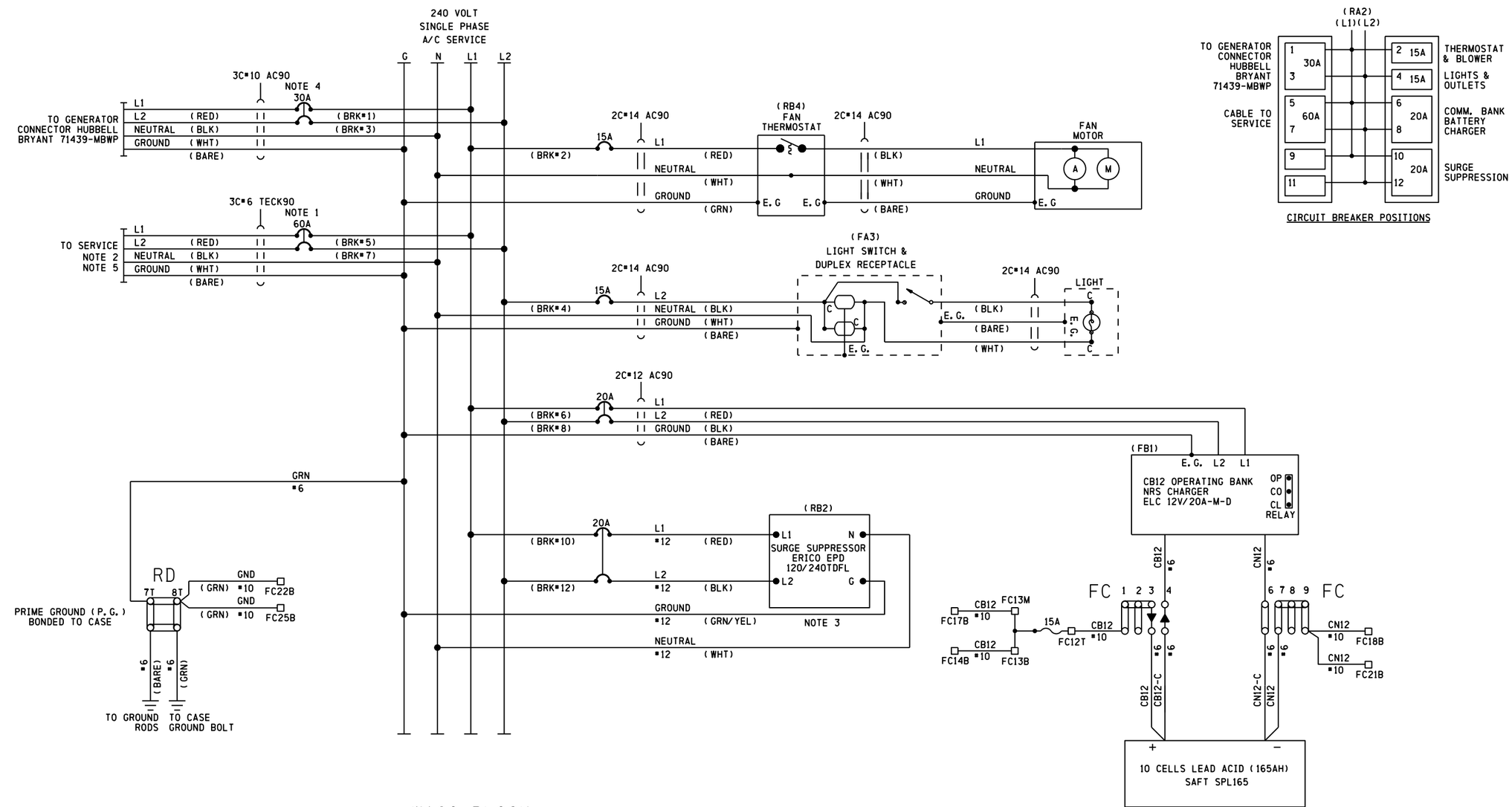

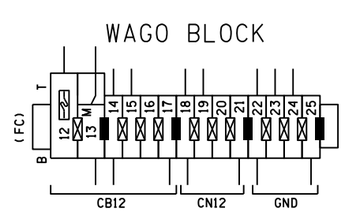

NOTES

1) CIRCUIT BREAKER NOT TO EXCEED 60 AMPERES.
2) FEEDER CIRCUIT BREAKER, AT STUB POLE SERVICE PANEL, NOT TO EXCEED 60 AMPERES.
3) KEEP LEADS AS SHORT AS POSSIBLE
4) A MANUAL TRANSFER EQUIPMENT KIT (PK4DTIM4LA) MUST BE INSTALLED BETWEEN THE SERVICE DISCONNECT BREAKER AND THE GENERATOR HOOK UP.
5) WHERE SEPARATE GROUND WIRE EXISTS BETWEEN THE SERVICE AND THE LOAD CENTER, REMOVE THE BRASS COLORED BONDING SCREW. (REFER TO SCHEMATIC ON BOX COVER FOR EXACT LOCATION).

1 WAGO TERMINAL 2 COND. 24-10AWG (WAGO 282-901)
DENOTES WAGO JUMPER CN# 02-45-872 (WAGO 282-402)
DENOTES 15A FUSE
DENOTES WAGO SEPARATOR (WAGO 282-328)
DENOTES WAGO END STOP CN# 02-46-646 (WAGO 282-116)

SII 15 DEC 2014

PROPOSED
DESIGN NO. PTC-012
RED-IN YELLOW-OUT

AS INSTALLED
DATE
BY
(PRINT NAME)

PROPOSED D	M	Y	REVISIONS	D	C	COMPLETED D	M	Y	C

REGION SOUTHERN
SUB. LEITHTON 332

SIGNALS AND COMMUNICATIONS HOMEWOOD
15 DECEMBER 2014
DES. DJB
CH. SIA

PTC COMM CASE
POWER DISTRIBUTION
AURORA, IL
87TH ST

LEI-017.68-17

DOT#260 563T

SIEMENS INDUSTRY INC
LOUISVILLE DIVISION, LOUISVILLE, KY

SIEMENS INDUSTRY INC
DES.: DJB | DATE: 15/12/2014 | JOB NO.: JXXE04728
CKD.: SIA | ISSUE DATE: N/A | EST. NO.: GDE000274
DRN.: DJB | PLAN NO.: N/A | SHEET 17 OF 18
P TIME: 10:15 | P DATE: $$PLOT_DATE | CAD ID.: LEI-017.68-17

REVISIONS
NO. | DATE | BY | DESCRIPTION | APP. BY
1 | 2 | 3 | 4 | 5

lei-017.68-17.dgn
27-APR-2015

lei-017.68-18.dgn
27-APR-2015

REVISIONS				
NO.	DATE	BY	DESCRIPTION	APP. BY
1				
2				
3				
4				
5				

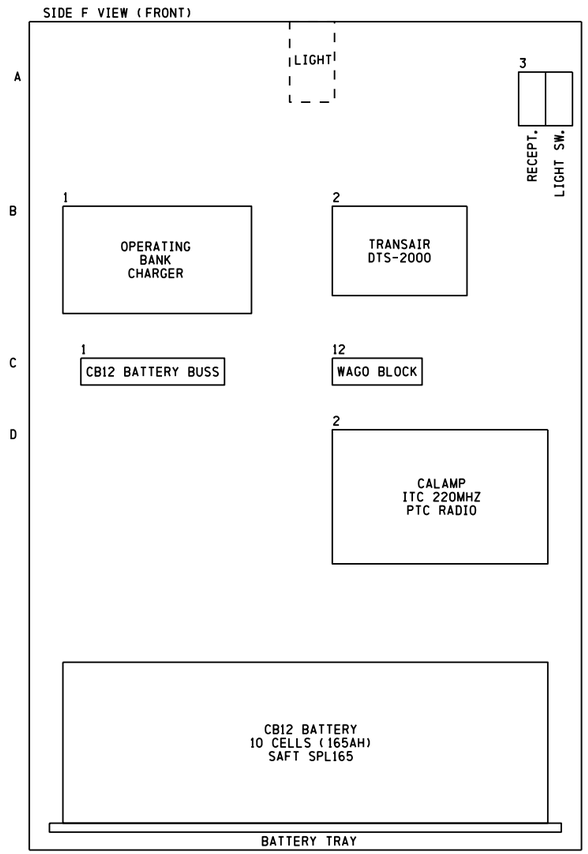

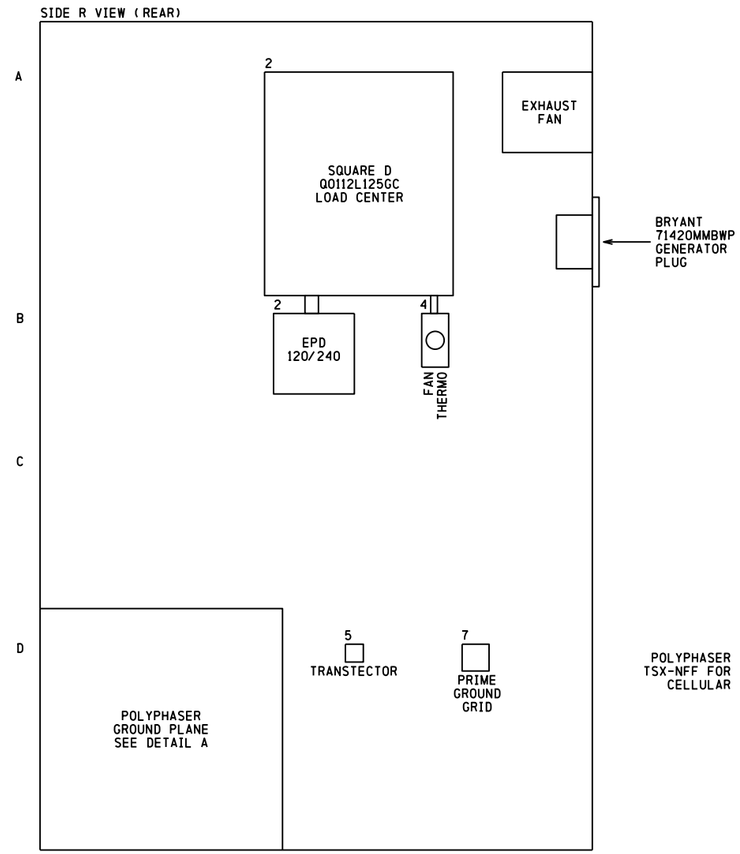

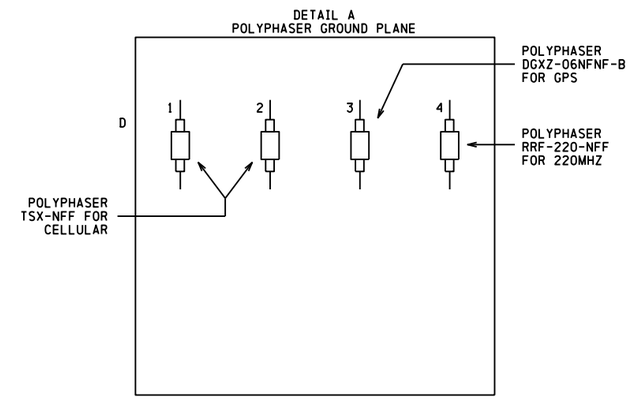

NOTES
1) LOW SINGLE DOOR, 41"X 61 3/4"CASE WITH POLYPHASER GROUND PLANE

SII 15 DEC 2014

PROPOSED
DESIGN NO. PTC-012
RED-IN YELLOW-OUT

AS INSTALLED
DATE _____
BY _____
(PRINT NAME)

PROPOSED			REVISIONS	D	C	COMPLETED			C
D	M	Y				D	M	Y	

REGION SOUTHERN
SUB. LEITHTON 332

SIGNALS AND COMMUNICATIONS HOMEWOOD
15 DECEMBER 2014
DES. DJB
CH. SIA

PTC COMM CASE
LAYOUT
AURORA, IL
87TH ST

LEI-017.68-18

DOT# 260 563T

19

SIEMENS INDUSTRY INC			
DES.: DJB	DATE: 15/12/2014	JOB NO.: JXXE04728	
CKD.: SIA	ISSUE DATE: N/A	EST. NO.:0DE000274	
DRN.: DJB	PLAN NO.:N/A	SHEET 18 OF 18	
P TIME:10:15	P DATE:$$PLOT_DATE	CAD ID.:LEI-017.68-18	

SIEMENS INDUSTRY INC
LOUISVILLE DIVISION, LOUISVILLE, KY