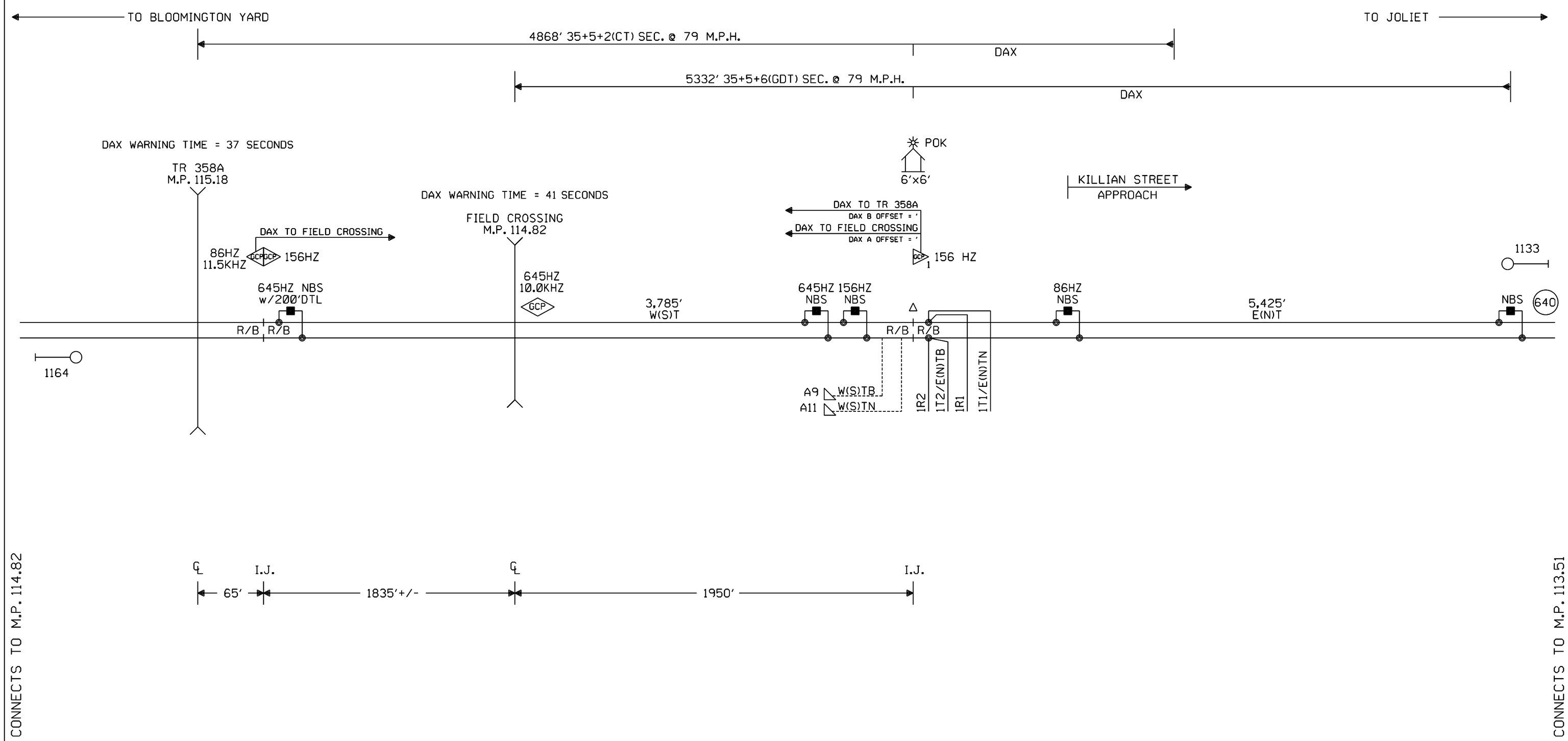

NOTES:

⊗ = TWISTED WIRES
ALL TRACK WIRES 2C. #6
INSULATED 1 TWIST PER FT.

TRANSMITTER AND RECEIVER LEADS
TO BE SEPARATED BY AT LEAST 12" IN TRENCH,
LENGTHS SHOULD NOT EXCEED MANUFACTURES
RECOMMENDATION.

ALL BUNGALOW WIRING TO BE #16 AWG FLEX
UNLESS OTHERWISE SPECIFIED EXCEPT ALL GROUND
WIRE TO BE #6 AWG FLEX OR LARGER.

REFER TO UP STANDARD DWG. FOR BUNGALOW
GROUNDING.

PORTABLE GENERATOR EXTENSION CORD
FOR 240V TO 240V IS PROVIDED AS WELL
AS A 120V TO 240V ADAPTER.

△ = ENSURE TRACK POLARITY IS
TRANSPOSED ACROSS ALL
INSULATED JOINTS.

OFFSET AND ISLAND DISTANCES
TO BE VERIFIED BY FIELD

W(S) ◄——○——► E(N)

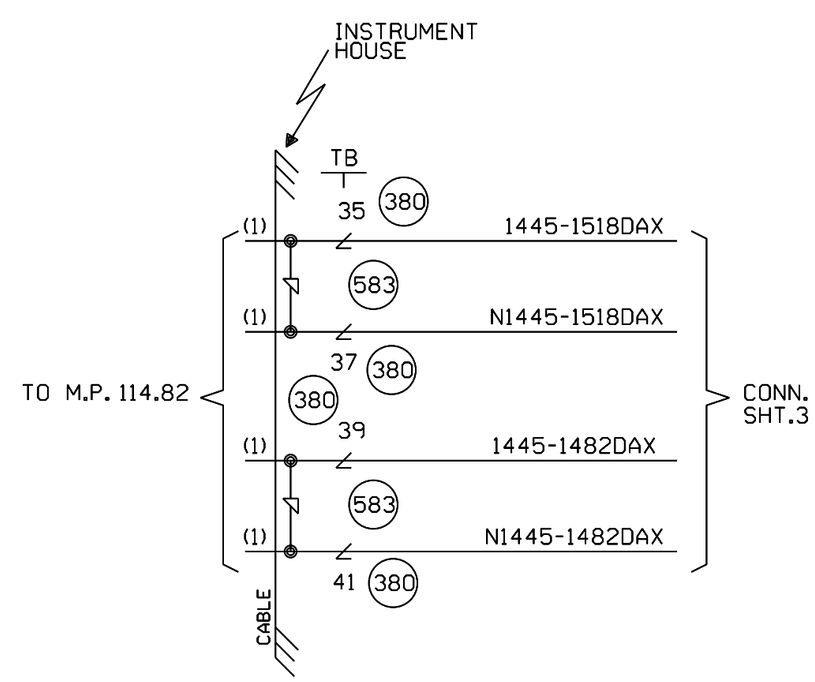

CABLE TABULATION

CABLE #1 7C#14 U.G.B.T. HOUSE TO MP. 114.82

NEW SHEET

Designed: 07/09/14 TIER 4 ILLINOIS HIGH SPEED RAIL PROJECT PHASE 4 MP 110.01-116.73 PID: 85680 WO#: 22822 IS: / NBT Res*: / / WIT / JVJ	MODIFICATION LEVEL		CIRCUIT MODIFICATIONS ARE NOT TO BE MADE WITHOUT AUTHORITY FROM THE OFFICE OF SIGNAL DESIGN	Date: 07/09/14 Des: WIT Chk: NBT PID: 85680 AFE: 22822	UNION PACIFIC RAILROAD TOWANDA, ILLINOIS REMOTE LOCATION JOLIET SUBDIVISION Office of AVP Engineering - Signal Omaha, Nebraska
	O. A. LAST LEVEL CHECKED	DU			
	LAST LEVEL MOD THIS TYPICAL	DU			
	LAST LEVEL BY DESIGNER	DU			
	CHANGED FROM TYPICAL?	Y			
	Rev 01.24.11 4K REMOTE.1				

Sh.: 1
DOT 000000R
MP: 114.45
ID: CSL11445.1X

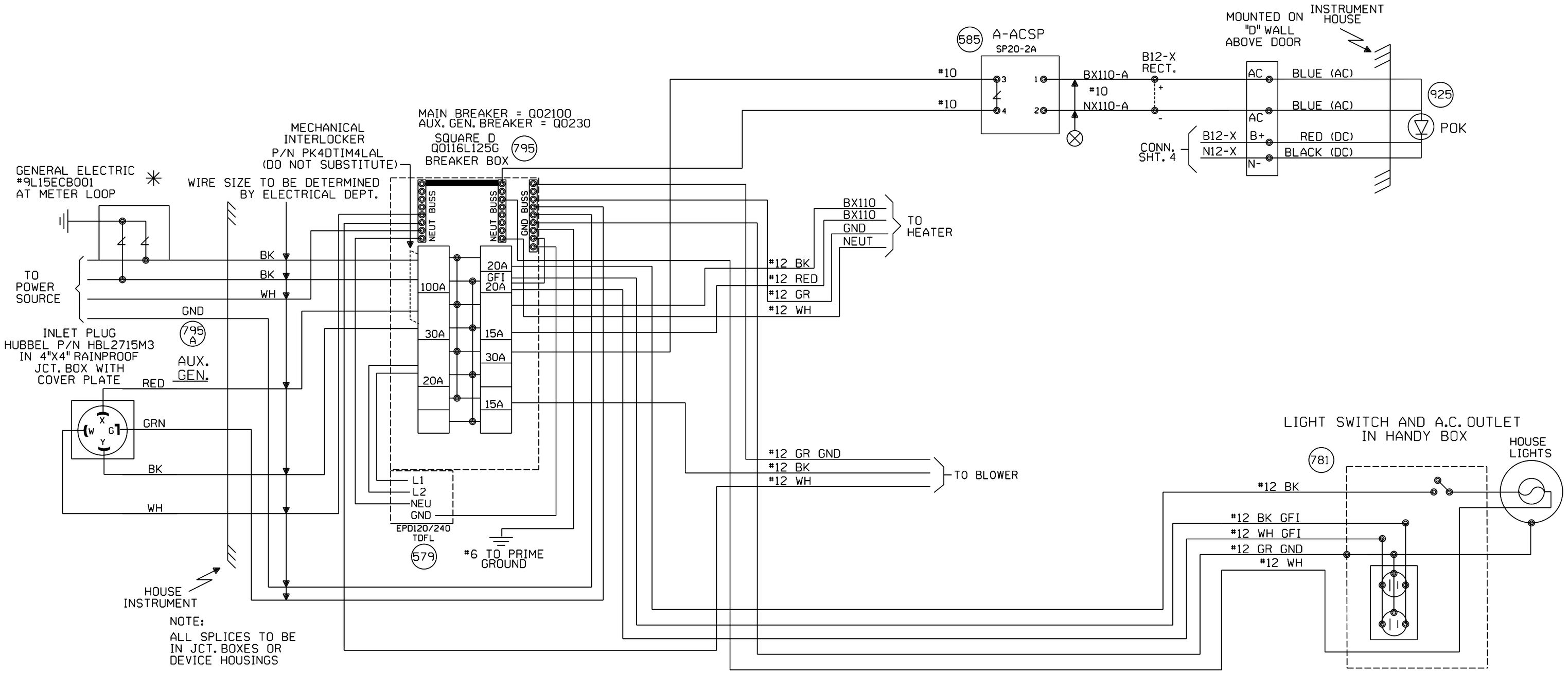

NEW SHEET

					Designed: 07/09/14 TIER 4 ILLINOIS HIGH SPEED RAIL PROJECT PHASE 4 MP 110.01-116.73 PID: 85680 WO#: 22822 IS: / NBT Rec#: / /WIT /JVJ	MODIFICATION LEVEL Q.A. LAST LEVEL CHECKED DU LAST LEVEL MOD THIS TYPICAL DU LAST LEVEL BY DESIGNER DU CHANGED FROM TYPICAL? Y REV 01.24.11 4K SEARAC.2	CIRCUIT MODIFICATIONS ARE NOT TO BE MADE WITHOUT AUTHORITY FROM THE OFFICE OF SIGNAL DESIGN	Date: 07/09/14 Des: WIT Chk: NBT PID: 85680 AFE: 22822	UNION PACIFIC RAILROAD TOWANDA, ILLINOIS REMOTE LOCATION JOLIET SUBDIVISION Office of AVP Engineering - Signal Omaha, Nebraska	Sh.: 2 DOT 000000R MP: 114.45 ID: CSL11445.2X

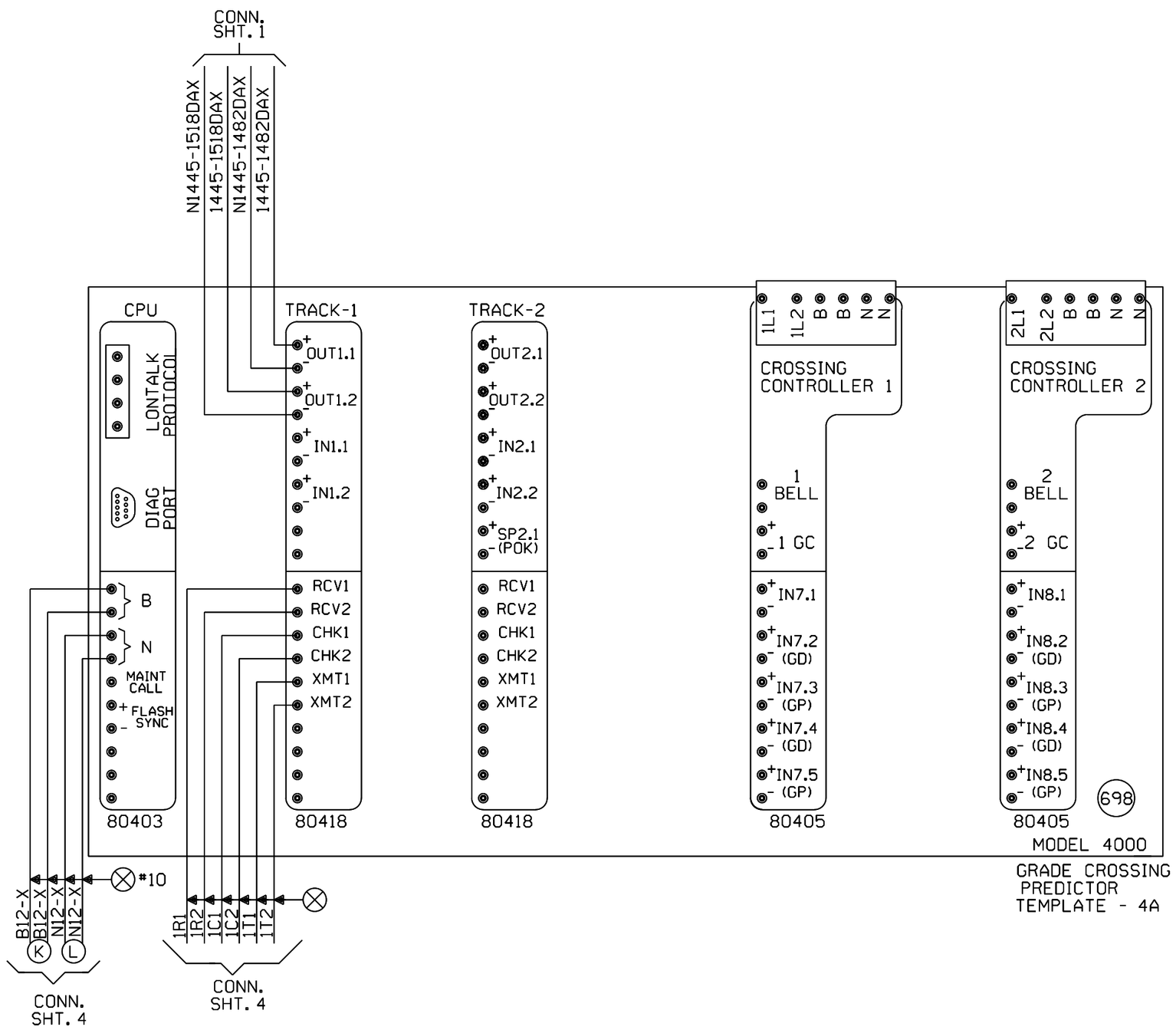

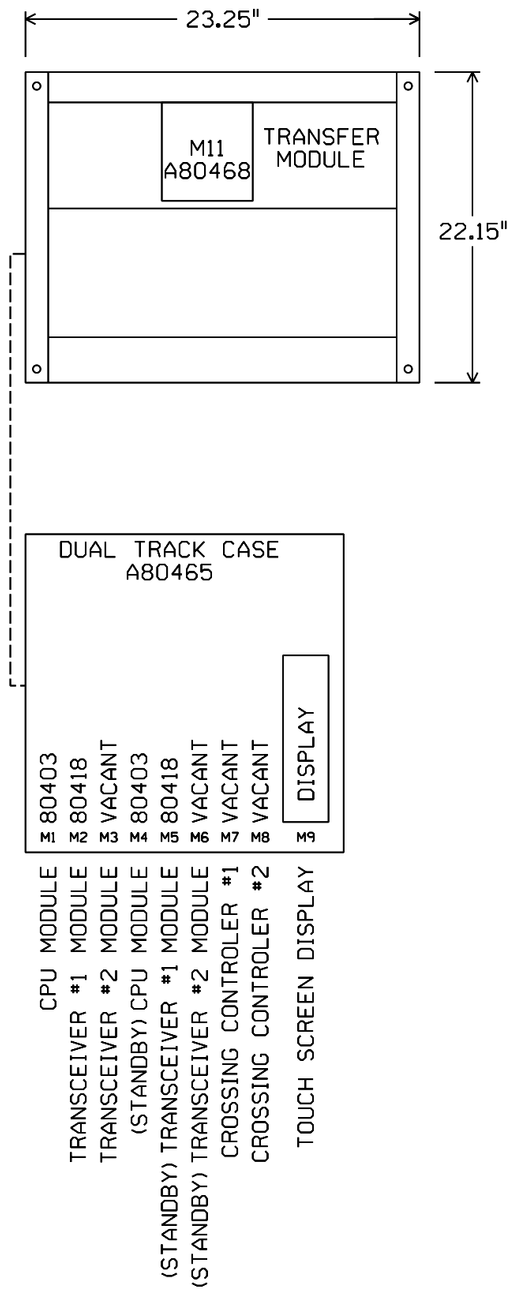

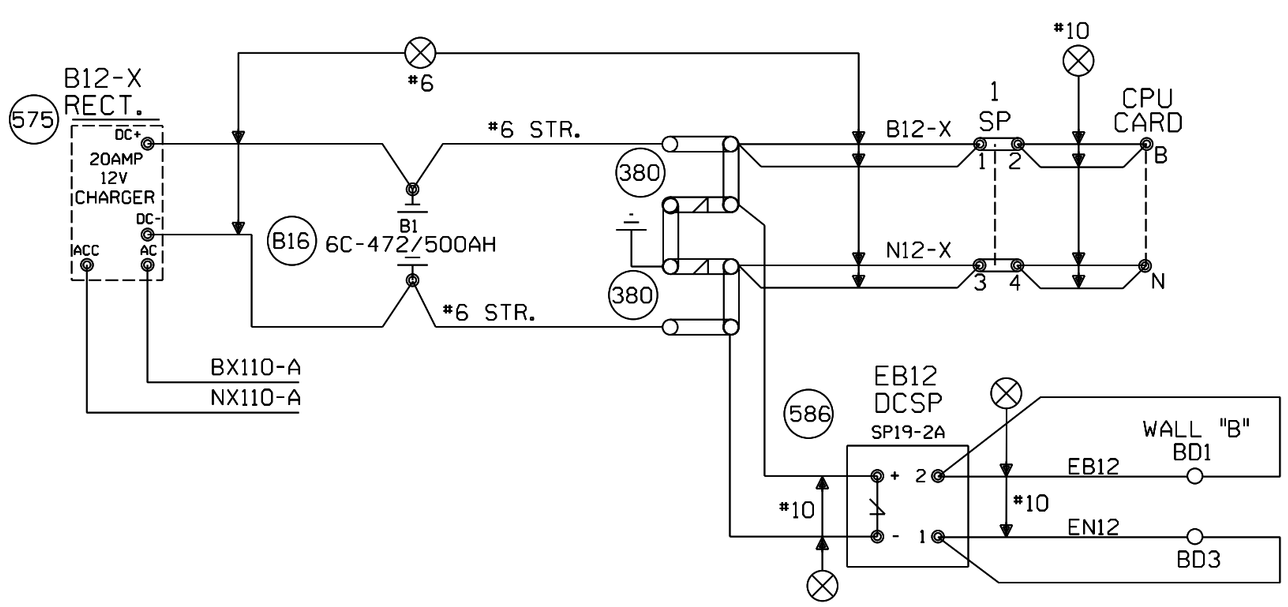

"Mf" FREQUENCY (HZ)	MAXIMUM TRANSMIT WIRE LENGTH (FEET)
86	100
114	125
156	150
211	200
285-970	250

NOTE:
EACH TRANSMITTER TO RAIL WIRE FROM XMT1 AND XMT2 MUST NOT EXCEED THE MAXIMUM LENGTH SPECIFIED IN THE TABLE SHOWN. THE RECEIVER WIRE LENGTH IS NOT CRITICAL. DOES NOT APPLY TO 6 TRACK WIRE APPLICATION.

NEW SHEET

Designed: 07/09/14
TIER 4 ILLINOIS HIGH SPEED RAIL PROJECT
PHASE 4
MP 110.01-116.73
PID: 85680 WO#: 22822
IS: NBT
Rec'd: WIT JWJ
REV 01.24.11 4K 2TKGF.3

MODIFICATION LEVEL	
O. A. LAST LEVEL CHECKED	DU
LAST LEVEL MOD THIS TYPICAL	DU
LAST LEVEL BY DESIGNER	DU
CHANGED FROM TYPICAL?	Y

CIRCUIT MODIFICATIONS ARE NOT TO BE MADE WITHOUT AUTHORITY FROM THE OFFICE OF SIGNAL DESIGN

Date: 07/09/14
Des: WIT Chk: NBT
PID: 85680
AFE: 22822

UNION PACIFIC RAILROAD
TOWANDA, ILLINOIS
REMOTE LOCATION
JOLIET SUBDIVISION
Office of AVP Engineering - Signal Omaha, Nebraska

Sh.: 3
DOT 000000R
MP: 114.45
ID: CSL11445.3X

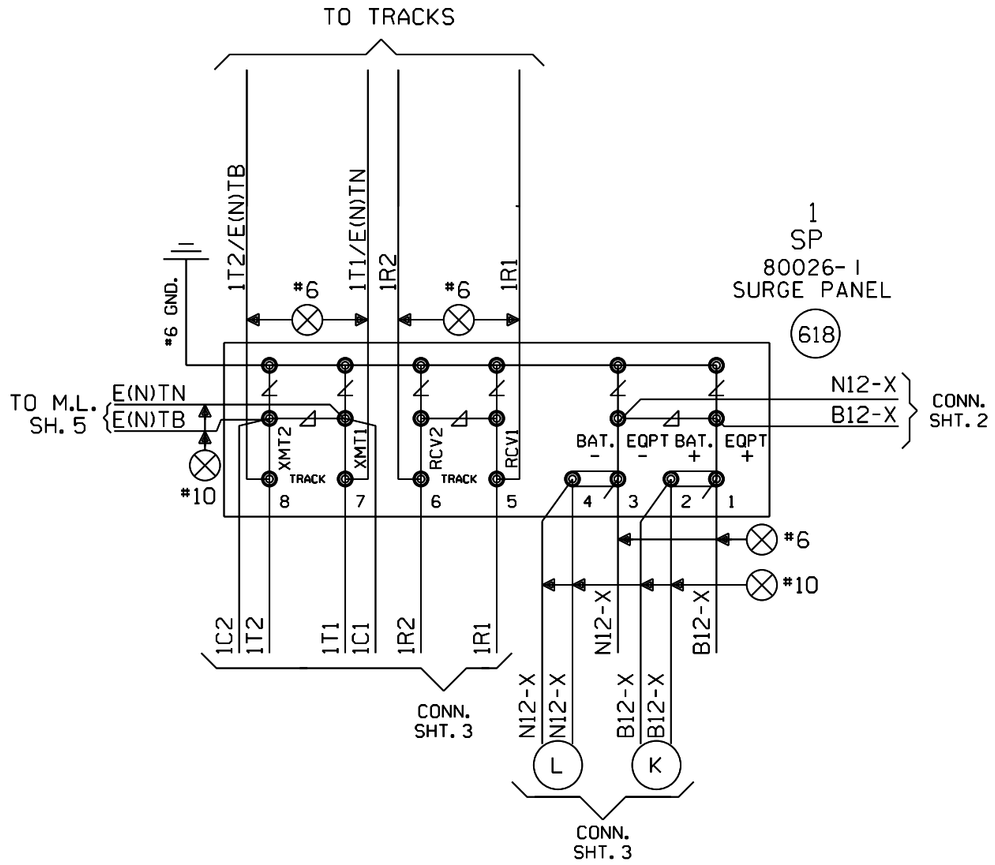

NEW SHEET

					Designed: 07/09/14 TIER 4 ILLINOIS HIGH SPEED RAIL PROJECT PHASE 4 MP 110.01-116.73 PID: 85680 WO#: 22822 IS: / NBT Rec#: / /WIT /JVJ	MODIFICATION LEVEL		CIRCUIT MODIFICATIONS ARE NOT TO BE MADE WITHOUT AUTHORITY FROM THE OFFICE OF SIGNAL DESIGN	Date: 07/09/14 Des: WIT Chk: NBT PID: 85680 AFE: 22822	UNION PACIFIC RAILROAD TOWANDA, ILLINOIS REMOTE LOCATION JOLIET SUBDIVISION Office of AVP Engineering - Signal Omaha, Nebraska	Sh.: 4 DOT 000000R MP: 114.45 ID: CSL11445.4X
						Q.A. LAST LEVEL CHECKED	DU			
						LAST LEVEL MOD THIS TYPICAL	DU			
						LAST LEVEL BY DESIGNER	DU			
						CHANGED FROM TYPICAL? REV 01.24.11 4K REMOTE.4	Y			

NOTES:

⊗ = TWISTED WIRES

⊘ = OBSERVE CORRECT POLARITY. EQUIPMENT WILL BE DAMAGED IF CONNECTIONS ARE REVERSED

ALL WIRING TO TRACK 2C. NO.6 U.G.B.T. CABLE UNLESS OTHERWISE SPECIFIED.

ALL CASE WIRING TO BE NO.16 UNLESS OTHERWISE SPECIFIED.

ALL GROUND CONNECTIONS TO BE #6 OR LARGER, SIGNAL WIRING SHOP TO RUN ALL GROUND CONNECTIONS.

ENSURE TRACK POLARITY IS TRANSPOSED ACROSS ALL INSULATED JOINTS.

⧖ = TEST TERMINALS MUST BE INSTALLED ON ALL WIRING CONNECTED TO EXTERNAL CABLES (EXCEPT TRACK AND A.C. POWER WIRES).

USE TAB 310 WITH MICROTRAX AND NO CABS.

PORTABLE GENERATOR EXTENSION CORD FOR 240V TO 240V IS PROVIDED AS WELL AS A 120V TO 240V ADAPTER.

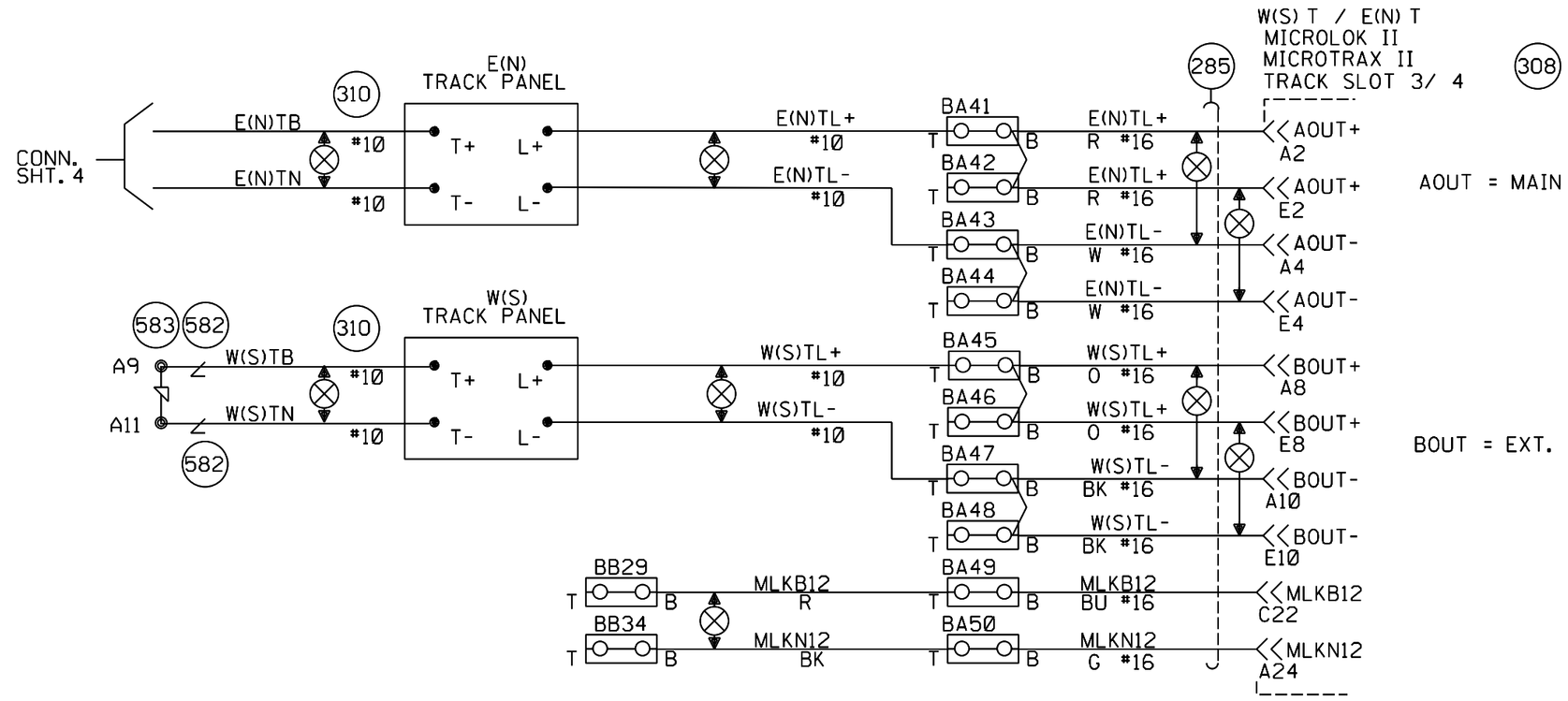

NEW SHEET

Designed: 07/09/14 TIER 4 ILLINOIS HIGH SPEED RAIL PROJECT PHASE 4 MP 110.01-116.73 PID: 85680 WO#: 22822 IS: / NBT Rec#: / /WIT /JVJ	MODIFICATION LEVEL		CIRCUIT MODIFICATIONS ARE NOT TO BE MADE WITHOUT AUTHORITY FROM THE OFFICE OF SIGNAL DESIGN	Date: 07/09/14 Des: WIT Chk: NBT PID: 85680 AFE: 22822	UNION PACIFIC RAILROAD TOWANDA, ILLINOIS REMOTE LOCATION JOLIET SUBDIVISION Office of AVP Engineering - Signal Omaha, Nebraska	Sh.: 5 DOT 000000R MP: 114.45 ID: CSL11445.5S
	Q.A. LAST LEVEL CHECKED	DU				
	LAST LEVEL MOD THIS TYPICAL	DU				
	LAST LEVEL BY DESIGNER	DU				
	CHANGED FROM TYPICAL?	Y				
	REV 10/3/13 1TMLHBINT.1S.DGN					

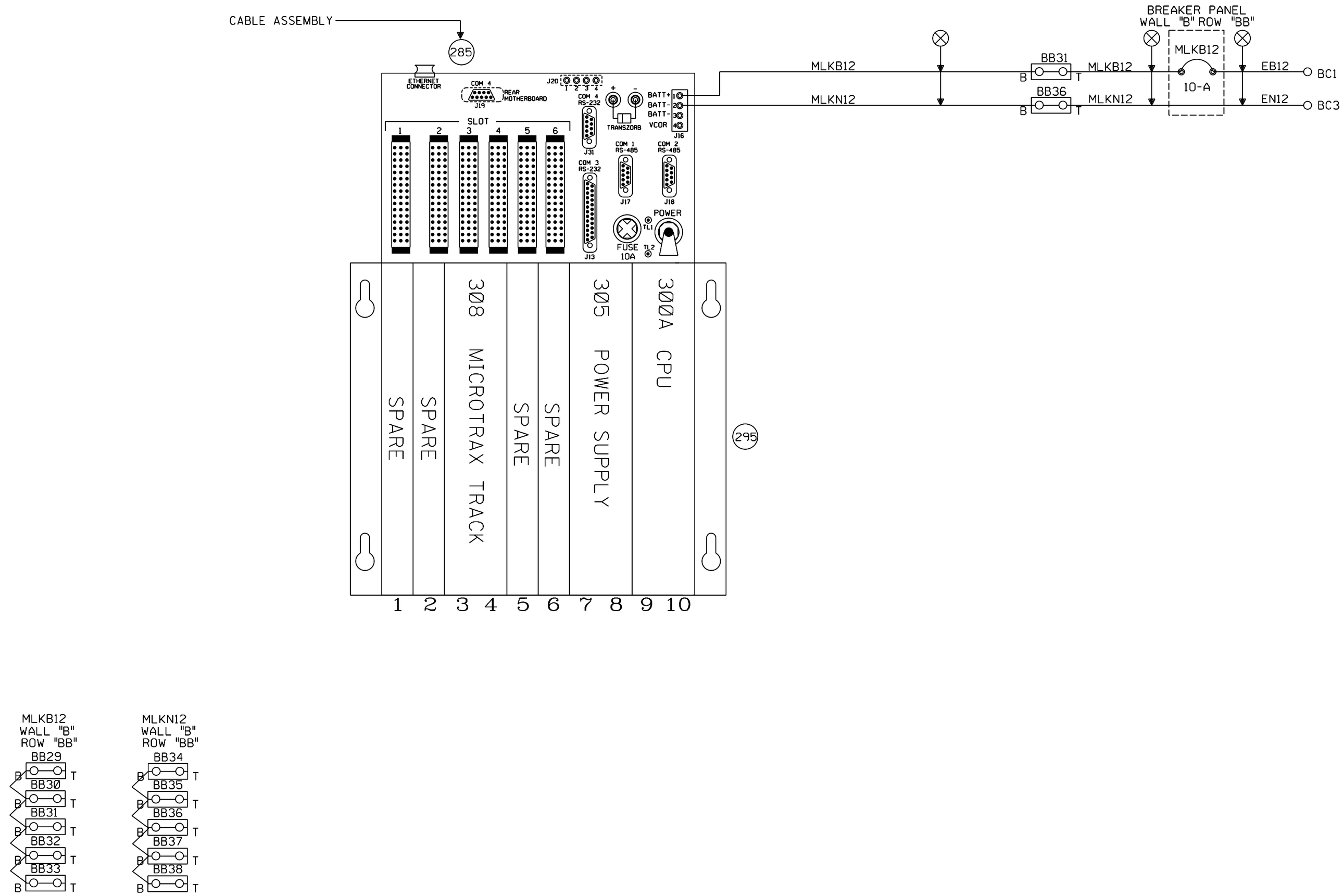

NEW SHEET

					Designed: 07/09/14 TIER 4 ILLINOIS HIGH SPEED RAIL PROJECT PHASE 4 MP 110.01-116.73 PID: 85680 WO#: 22822 IS: / NBT Rec#: / /WIT /JVJ	MODIFICATION LEVEL		CIRCUIT MODIFICATIONS ARE NOT TO BE MADE WITHOUT AUTHORITY FROM THE OFFICE OF SIGNAL DESIGN	Date: 07/09/14 Des: WIT Chk: NBT PID: 85680 AFE: 22822	UNION PACIFIC RAILROAD TOWANDA, ILLINOIS REMOTE LOCATION JOLIET SUBDIVISION Office of AVP Engineering - Signal Omaha, Nebraska	Sh.: 6 DOT 000000R MP: 114.45 ID: CSL11445.6S
						Q.A. LAST LEVEL CHECKED	DU			
						LAST LEVEL MOD THIS TYPICAL	DU			
						LAST LEVEL BY DESIGNER	DU			
						CHANGED FROM TYPICAL?	Y			
						REV 10/3/13 1TMLHBINT.4S.DGN				

ADDRESS SELECT JUMPERS LOCATED INSIDE CARDFILE

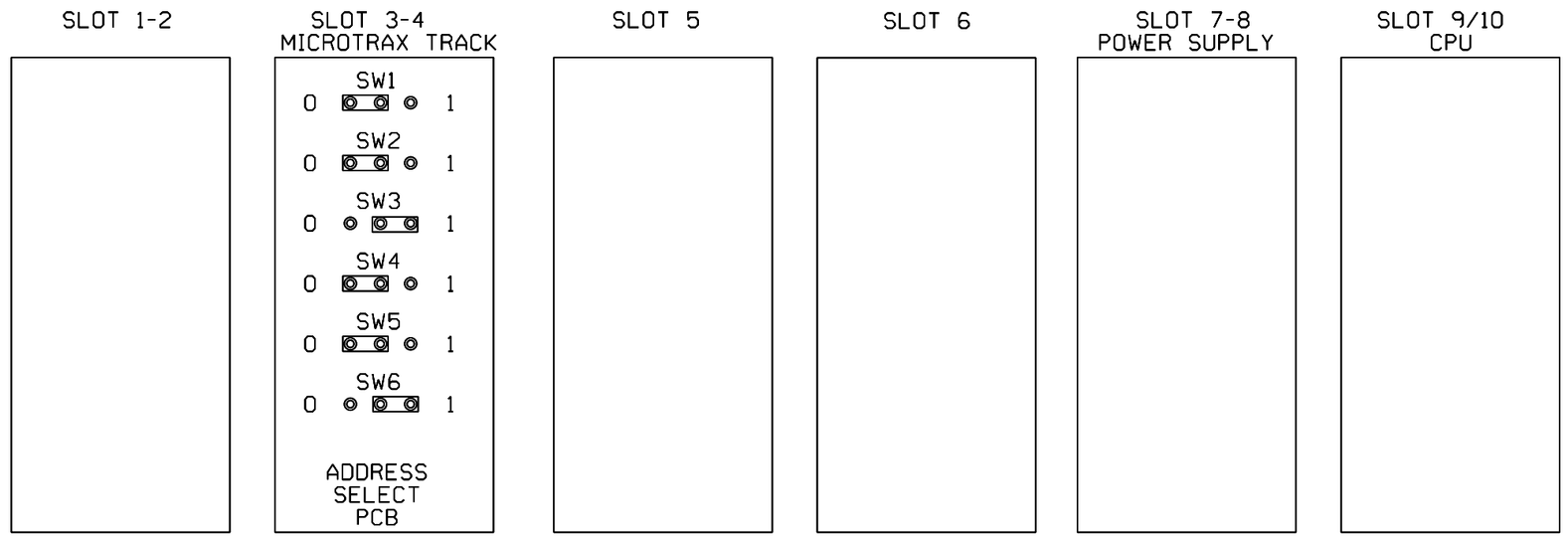

NOTE: FOR PTC COMPATIBLE CPU JUMPER SETTINGS REFER TO ANSALDO MANUAL 1D1.0028 PAGE 1-26 1-27 1-28 REV. 1 DATE 8/2009

FOR STANDARD CPU JUMPER SETTINGS REFER TO ANSALDO MANUAL SM-6800B PAGE 2-12, 2-13 REV.2.5 DATE 9/2000

ML8RRH REV B

15 SEC SLOW PICK ET TO PREVENT JOINT HOP	
15 SEC SLOW PICK WT TO PREVENT JOINT HOP	
PROGRAM ID 1 (BINARY 1)	
PROGRAM ID 2 (BINARY 2)	
PROGRAM ID 3 (BINARY 4)	X
PROGRAM ID 4 (BINARY 8)	
PROGRAM ID 5 (BINARY 16)	
PROGRAM ID 6 (BINARY 32)	X
PROGRAM ID 7 (BINARY 64)	X
PROGRAM ID 8 (BINARY 128)	
CODE P?	

PLACE AN "X" IN THE BOX FOR DESIRED CONFIGURATION.

NEW SHEET

Designed: 07/09/14
TIER 4 ILLINOIS HIGH SPEED RAIL PROJECT
PHASE 4
MP 110.01-116.73
PID: 85680 WO#: 22822
IS: NBT
Rec'd: WIT JVJ

MODIFICATION LEVEL	
Q.A. LAST LEVEL CHECKED	DU
LAST LEVEL MOD THIS TYPICAL	DU
LAST LEVEL BY DESIGNER	DU
CHANGED FROM TYPICAL?	Y

REV 10/3/13 1TMLHBINT.5S.DGN

CIRCUIT MODIFICATIONS ARE NOT TO BE MADE WITHOUT AUTHORITY FROM THE OFFICE OF SIGNAL DESIGN

Date: 07/09/14
Des: WIT Chk: NBT
PID: 85680
AFE: 22822

UNION PACIFIC RAILROAD
TOWANDA, ILLINOIS
REMOTE LOCATION
JOLIET SUBDIVISION
Office of AVP Engineering - Signal Omaha, Nebraska

Sh.: 7
DOT 000000R
MP: 114.45
ID: CSL11445.7S

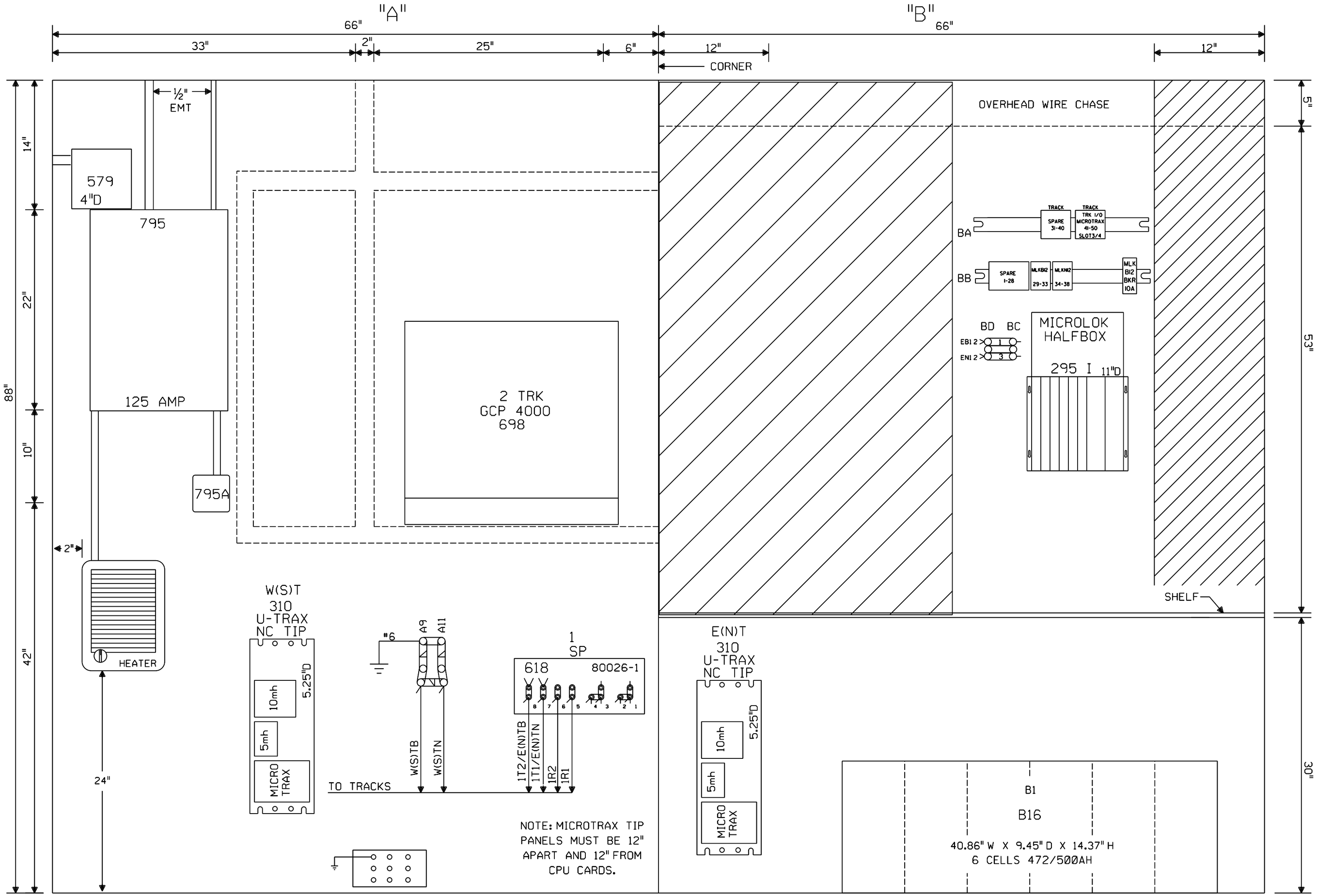

NOTE: MICROTRAX TIP PANELS MUST BE 12" APART AND 12" FROM CPU CARDS.

6X6 WAYSIDE/XING HOUSE WITH BLOWER U.P. PART#520-????

NOTE: ALL DIMENSIONS SHOWN ARE APPROXIMATE.

NEW SHEET

Designed: 07/09/14

TIER 4 ILLINOIS HIGH SPEED RAIL PROJECT
PHASE 4
MP 110.01-116.73

PID: 85680 WO#: 22822
IS: / NBT
Rec#: / /WIT /JVJ

MODIFICATION LEVEL	
O.A. LAST LEVEL CHECKED	DU
LAST LEVEL MOD THIS TYPICAL	DU
LAST LEVEL BY DESIGNER	DU
CHANGED FROM TYPICAL?	Y

REV 01.24.11 4K 4TKGFC.8

CIRCUIT MODIFICATIONS ARE NOT TO BE MADE WITHOUT AUTHORITY FROM THE OFFICE OF SIGNAL DESIGN

Date: 07/09/14
Des: WIT Chk: NBT
PID: 85680
AFE: 22822

UNION PACIFIC RAILROAD

TOWANDA, ILLINOIS
REMOTE LOCATION
JOLIET SUBDIVISION

Office of AVP Engineering - Signal Omaha, Nebraska

Sh.: 8
DOT 000000R
MP: 114.45
ID: CSL11445.8X

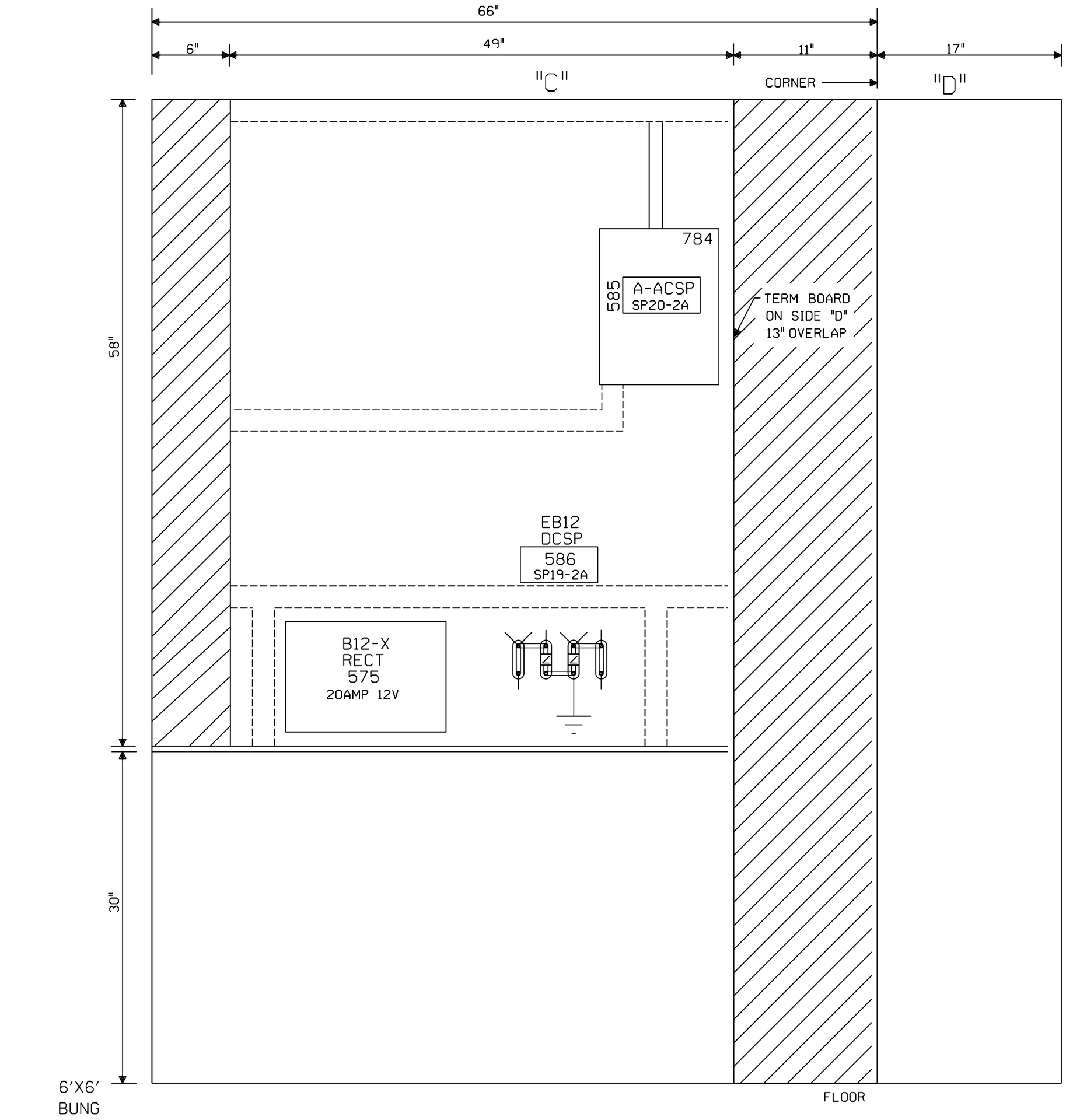

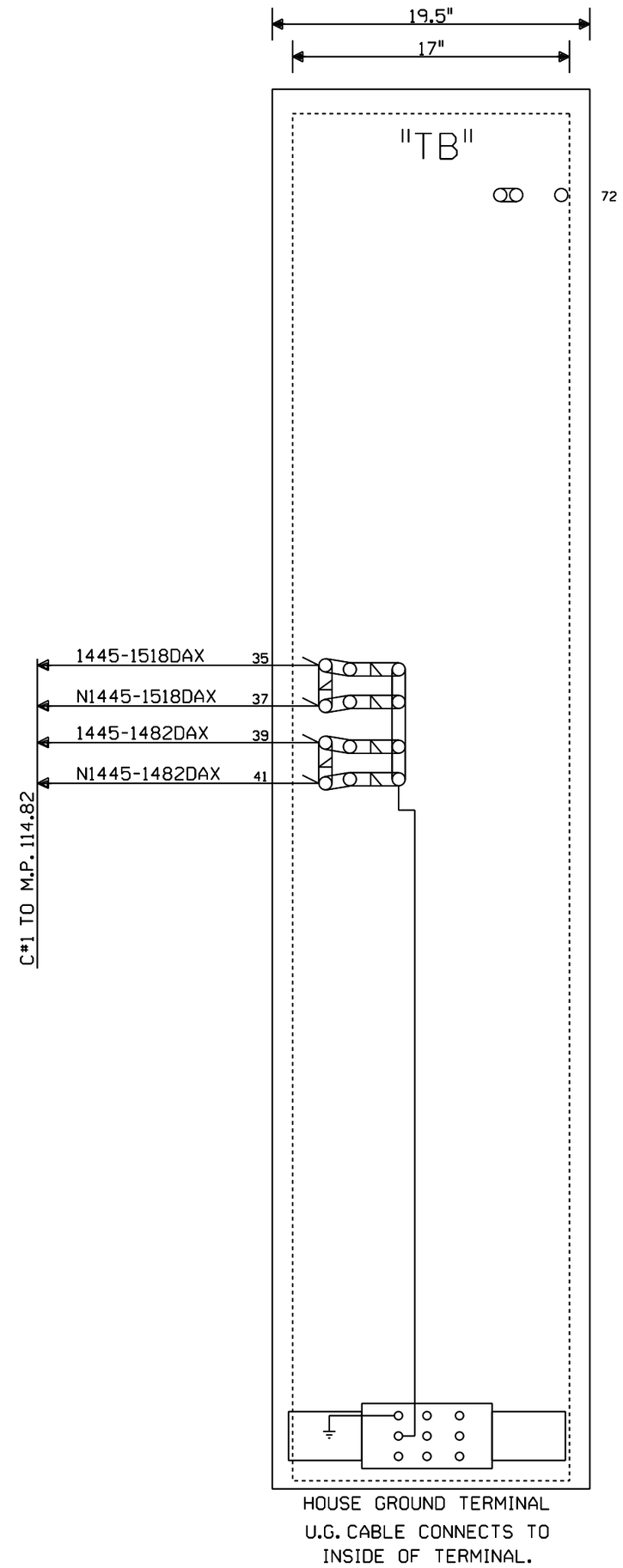

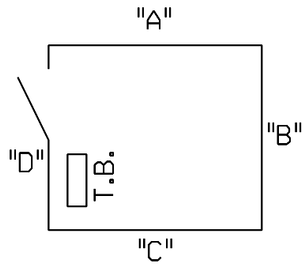

NOTE: NO TEST LINKS TO BE INSTALLED WITH CROSSING LIGHTING OR GATE MECH CIRCUITRY

NOTE: ALL DIMENSIONS SHOWN ARE APPROXIMATE.

NEW SHEET

Designed: 07/09/14
TIER 4 ILLINOIS HIGH SPEED RAIL PROJECT
PHASE 4
MP 110.01-116.73
PID: 85680 WO#: 22822
IS: / NBT
Rec*: / / WIT / JVJ

MODIFICATION LEVEL	
O. A. LAST LEVEL CHECKED	DU
LAST LEVEL MOD THIS TYPICAL	DU
LAST LEVEL BY DESIGNER	DU
CHANGED FROM TYPICAL?	Y

REV 01.24.11 4K GFC.9

CIRCUIT MODIFICATIONS ARE NOT TO BE MADE WITHOUT AUTHORITY FROM THE OFFICE OF SIGNAL DESIGN

Date: 07/09/14
Des: WIT Chk: NBT
PID: 85680
AFE: 22822

UNION PACIFIC RAILROAD
TOWANDA, ILLINOIS
REMOTE LOCATION
JOLIET SUBDIVISION
Office of AVP Engineering - Signal Omaha, Nebraska

Sh.: 9
DOT 000000R
MP: 114.45
ID: CSL11445.9X

Minimum Program Steps Report

Location and SIN

DOT Number: 000000R
Milepost Number: 114.45
Site Name: TOWANDA, IL

SIN: 762010010016 *

* Parameter is part of office check number calculation.

MCF and Template Selection

MCF Name: GCP-T6X-02-6.mcf
MCF Revision: 26
MCFCRC: 494D2656

Template = 4A:6 Remotes (OCCN) *

* Parameter is part of office check number calculation.

Minimum Program Steps

TEMPLATE: module configuration
Chassis Type = Dual Two Track (OCCN) *

TEMPLATE: track 1-Remote Dax
Track 1 : GCP Frequency = 156 Hz (OCCN) *
Track 1 : Approach Distance = 3442 ft (OCCN) *
Track 1 : Dax A Warning Time = 41 sec (OCCN) *
Track 1 : Dax A Offset Distance = 1890 ft (OCCN) *
Track 1 : GCP Transmit Level = Medium (Set in Field,TCN)

TEMPLATE: track 1-Remote Daxes
Track 1 : Dax B Used = Yes (OCCN) *
Track 1 : Dax B Warning Time = 37 sec (OCCN) *
Track 1 : Dax B Offset Distance = 3785 ft (OCCN) *

TEMPLATE: OOS
OOS Timeout = 1 hrs (Set in Field)

TEMPLATE: OP assignment 1
OUT 1.1 = T1 Dax A (OCCN) *
OUT 1.2 = T1 Dax B (OCCN) *

MS4000 configuration
Track 1 : GCP Frequency = 156 Hz (OCCN,TCN) (Hidden) *

ADVANCED: site options
Daylight Savings = Off (Set in Field)

Express: MS4000 configuration
Track 1 : GCP Frequency = 156 Hz (OCCN,TCN) (Hidden) *

* Parameter is part of office check number calculation.

Check Numbers

Office Check Number: 7BDAD43E
Config. Check Number: 00F3AFAE
(Based on MCF Revision 26)

Parameters not part of office check number calculation:

Track 1 : GCP Transmit Level = Medium (Set in Field)
OOS Timeout = 1 hrs (Set in Field)
Daylight Savings = Off (Set in Field)

Comments

<none>

Configuration Package File

Filename: CSL11445_000000R.pac
Path: C:\PAC File\
Date/Time: 3/07/2015 12:16:09