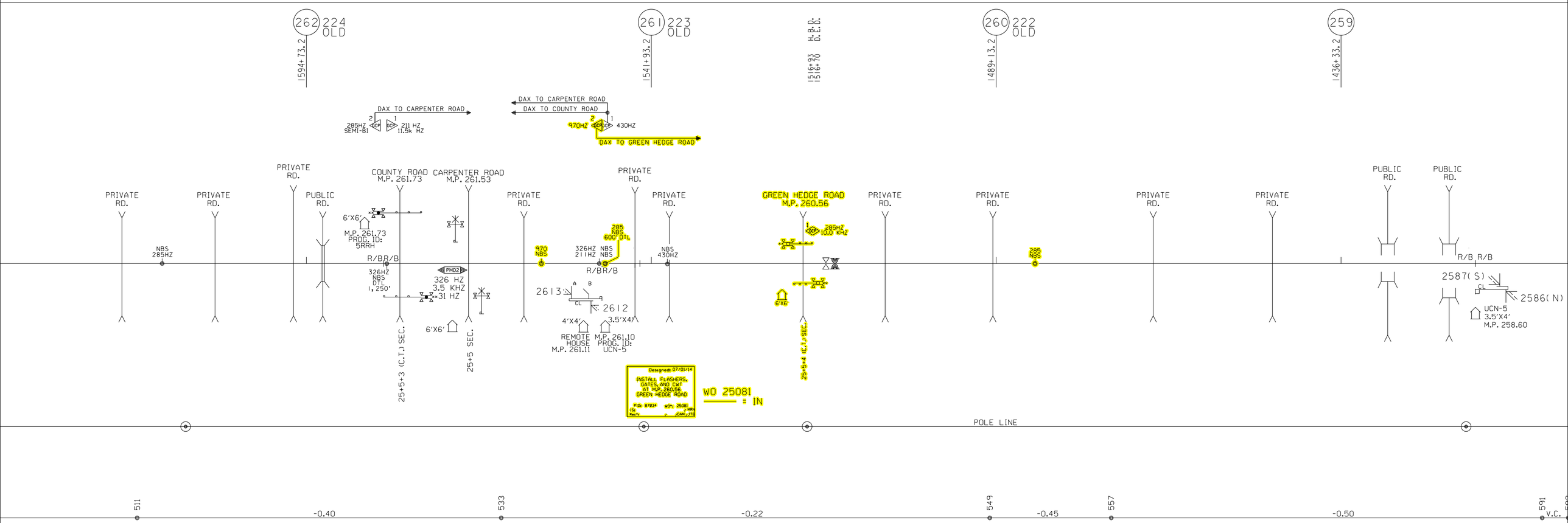

262 224 OLD
1594+73.2
261 223 OLD
1541+93.2
1516+93 H.B.D.
1516+70 D.E.D.
260 222 OLD
1489+13.2
259
1436+33.2
DAX TO CARPENTER ROAD
285HZ SEMI-BI
211 HZ 11.5k HZ
DAX TO CARPENTER ROAD
DAX TO COUNTY ROAD
970HZ
430HZ
DAX TO GREEN HEDGE ROAD
PRIVATE RD.
PUBLIC RD.
COUNTY ROAD M.P. 261.73
CARPENTER ROAD M.P. 261.53
GREEN HEDGE ROAD M.P. 260.56
NBS 285HZ
6'X6'
M.P. 261.73 PROG. ID: 5RRH
R/B R/B
326HZ NBS DTL 1,250'
PMD2
326 HZ 3.5 KHZ
31 HZ
25+5+3 (C.T.) SEC.
25+5 SEC.
970 NBS
285 NBS 600' DTL
326HZ NBS 211HZ NBS
2613
2612
4'X4'
3.5'X4'
REMOTE HOUSE M.P. 261.11
M.P. 261.10 PROG. ID: UCN-5
NBS 430HZ
285HZ 10.0 KHZ
25+5+4 (C.T.) SEC.
285 NBS
2587(S)
2586(N)
UCN-5 3.5'X4' M.P. 258.60
Designed: 07/01/14
INSTALL FLASHERS, GATES, AND CWT AT M.P. 260.56 GREEN HEDGE ROAD
WO 25081 = IN
POLE LINE
511
533
549
557
591
-0.40
-0.22
-0.45
-0.50
V.C.

PRIME WARNING TIME = 29 SECONDS

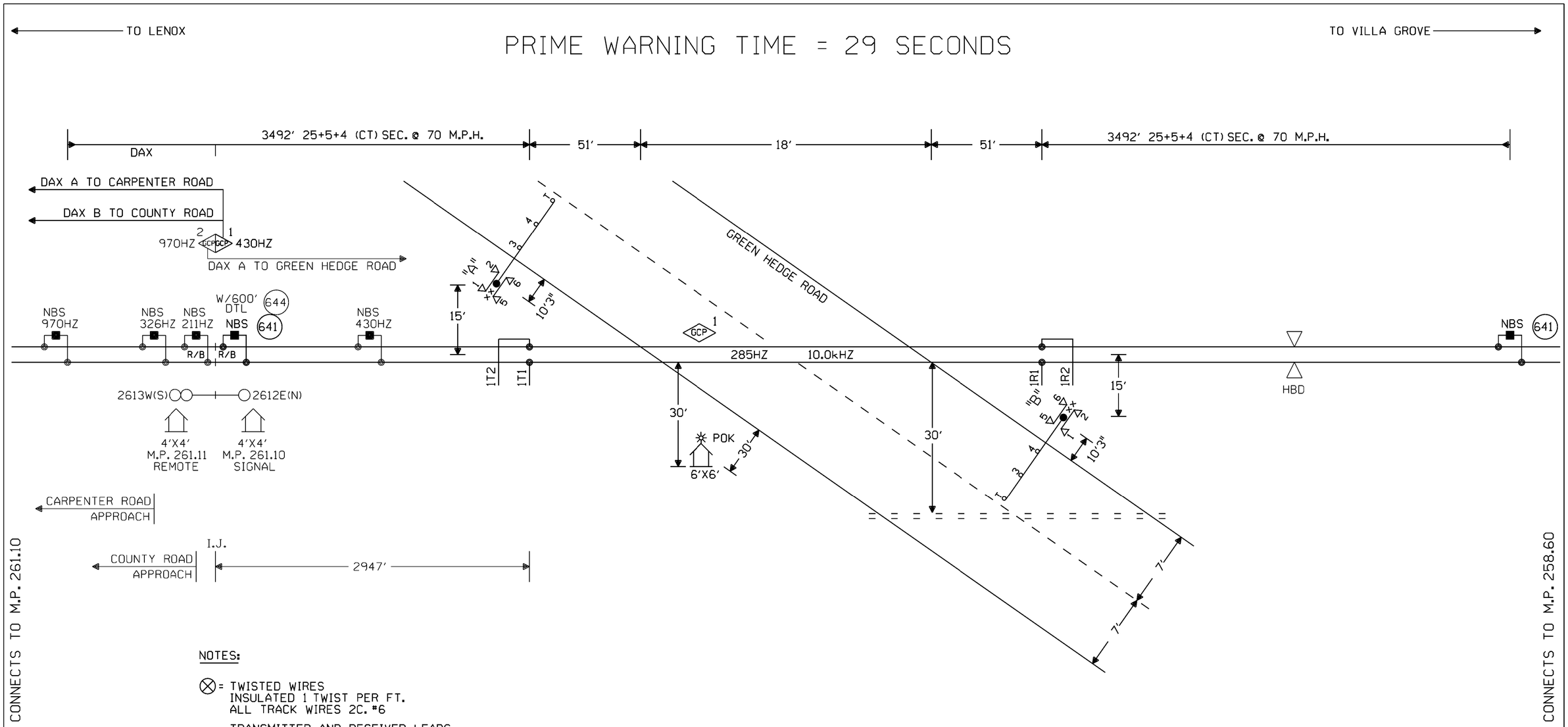

NOTES:

⊗ = TWISTED WIRES
INSULATED 1 TWIST PER FT.
ALL TRACK WIRES 2C. #6

TRANSMITTER AND RECEIVER LEADS TO BE SEPARATED BY AT LEAST 12" IN TRENCH. LENGTHS SHOULD NOT EXCEED MANUFACTURES RECOMMENDATION.

TOP OF FOUNDATION TO BE AT SAME ELEVATION AS THE SURFACE OF THE TRAVELED WAY & NO MORE THAN 4" ABOVE THE SURFACE OF THE GROUND.

ALL BUNGALOW WIRING TO BE #16 AWG FLEX UNLESS OTHERWISE SPECIFIED EXCEPT ALL GROUND WIRE TO BE #6 AWG FLEX OR LARGER.

ALL WIRING IN GATE MECHANISM TO BE #10 "AWG FLEX".

REFER TO UP STANDARD DWG FOR BUNGALOW GROUNDING.

PORTABLE GENERATOR EXTENSION CORD FOR 240V TO 240V IS PROVIDED AS WELL AS A 120V TO 240V ADAPTER.

FIELD TO VERIFY HOUSE PLACEMENT WITH ICC AND FIELD ENSURE ISLAND IS MINIMUM 120'.

ALL LIGHTS TO BE 12" ROUNDELS.

= = = = = = 4" X 30' CONDUIT

LIGHTS: LED LIGHTS

GATE A: 17'
GATE B: 17'

xx = BELL

OFFSET AND ISLAND DISTANCES TO BE VERIFIED BY FIELD

W(S) ◄——○——► E(N)

CONSTRUCTION NOTES:

1. FIELD TO VERIFY HOUSE PLACEMENT.
2. FIELD TO ENSURE ISLAND DISTANCE MINIMUM 120'.

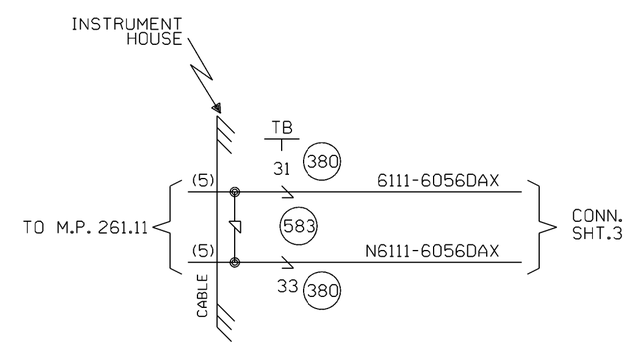

CABLE TABULATION

CABLE NO.5 7C#14 U.G.B.T. HOUSE TO M.P. 261.11

NEW SHEET

Designed: 07/01/14
INSTALL FLASHERS, GATES, AND CWT AT M.P. 260.56 GREEN HEDGE ROAD
PID: 87034 WO#: 25081 MRN
IS: CAM JTB
Rec'd:

MODIFICATION LEVEL	
O. A. LAST LEVEL CHECKED	DU
LAST LEVEL MOD THIS TYPICAL	DU
LAST LEVEL BY DESIGNER	DU
CHANGED FROM TYPICAL?	Y

Rev 01.24.11 4K 1TKBG.1

CIRCUIT MODIFICATIONS ARE NOT TO BE MADE WITHOUT AUTHORITY FROM THE OFFICE OF SIGNAL DESIGN

Date: 07/01/14
Des: CAM Chk: MRN
PID: 87034
AFE: 25081

UNION PACIFIC RAILROAD
WORDEN, ILLINOIS
GREEN HEDGE ROAD
PANA SUBDIVISION
Office of AVP Engineering - Signal Omaha, Nebraska

Sh.: 1
DOT 542215V
MP: 260.56
ID: 030226056.1X

030226056.1X 2/27/2015 1:01:42 PM

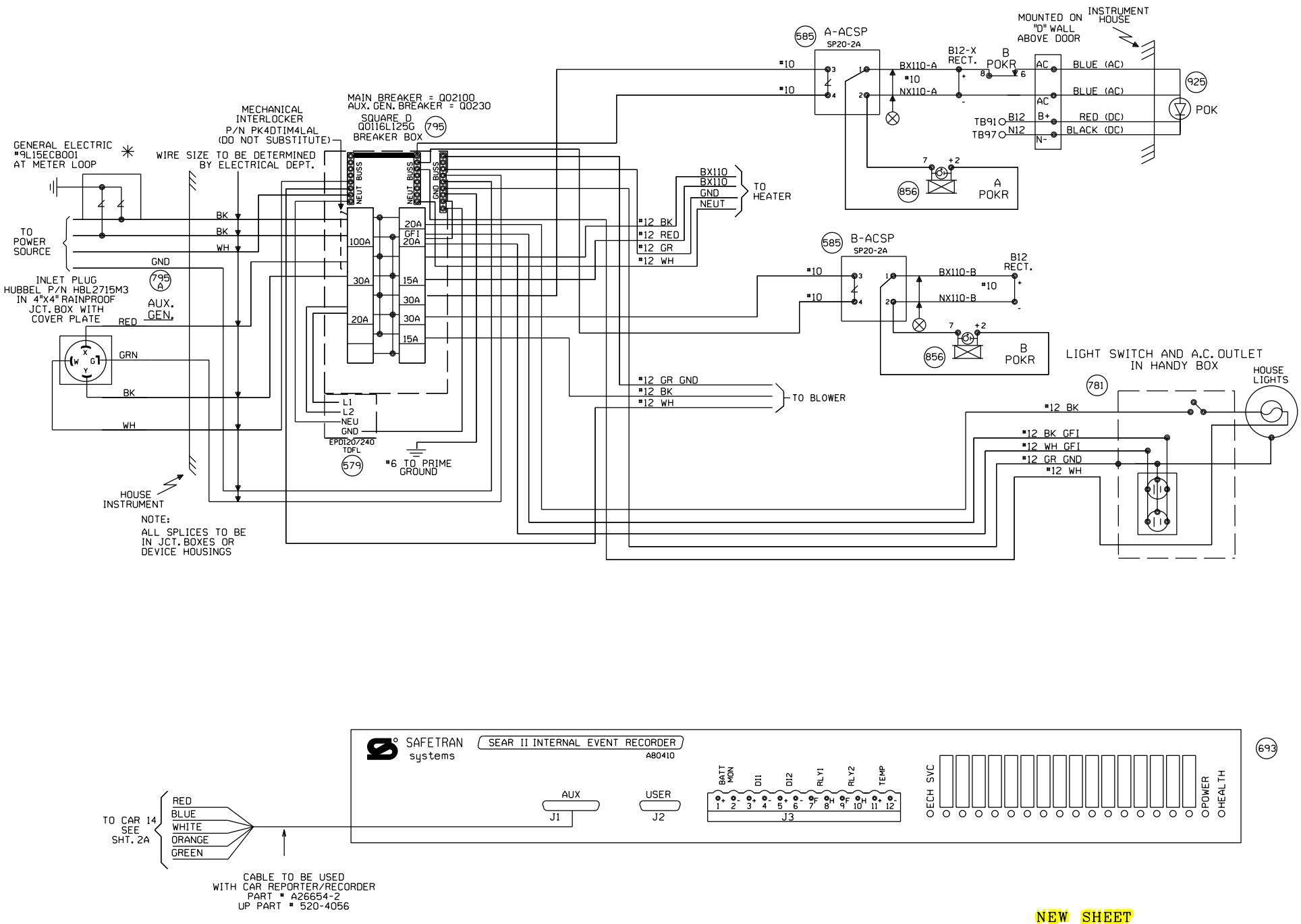

NEW SHEET

Designed: 07/01/14 INSTALL FLASHERS, GATES, AND CWT AT M.P. 260.56 GREEN HEDGE ROAD PID: 87034 WO#: 25081 IS: / / Rec#: / /CAM/JTB	MODIFICATION LEVEL		CIRCUIT MODIFICATIONS ARE NOT TO BE MADE WITHOUT AUTHORITY FROM THE OFFICE OF SIGNAL DESIGN	Date: 07/01/14 Des: CAM Chk: PID: 87034 AFE: 25081	UNION PACIFIC RAILROAD WORDEN, ILLINOIS GREEN HEDGE ROAD PANA SUBDIVISION Office of AVP Engineering - Signal Omaha, Nebraska	Sh.: 2 DOT 542215V MP: 260.56 ID: 030226056.2X
	O.A. LAST LEVEL CHECKED	DU				
	LAST LEVEL MOD THIS TYPICAL	DU				
	LAST LEVEL BY DESIGNER	DU				
	CHANGED FROM TYPICAL?	Y				
	REV 01.24.11 4K SEARAC.2					

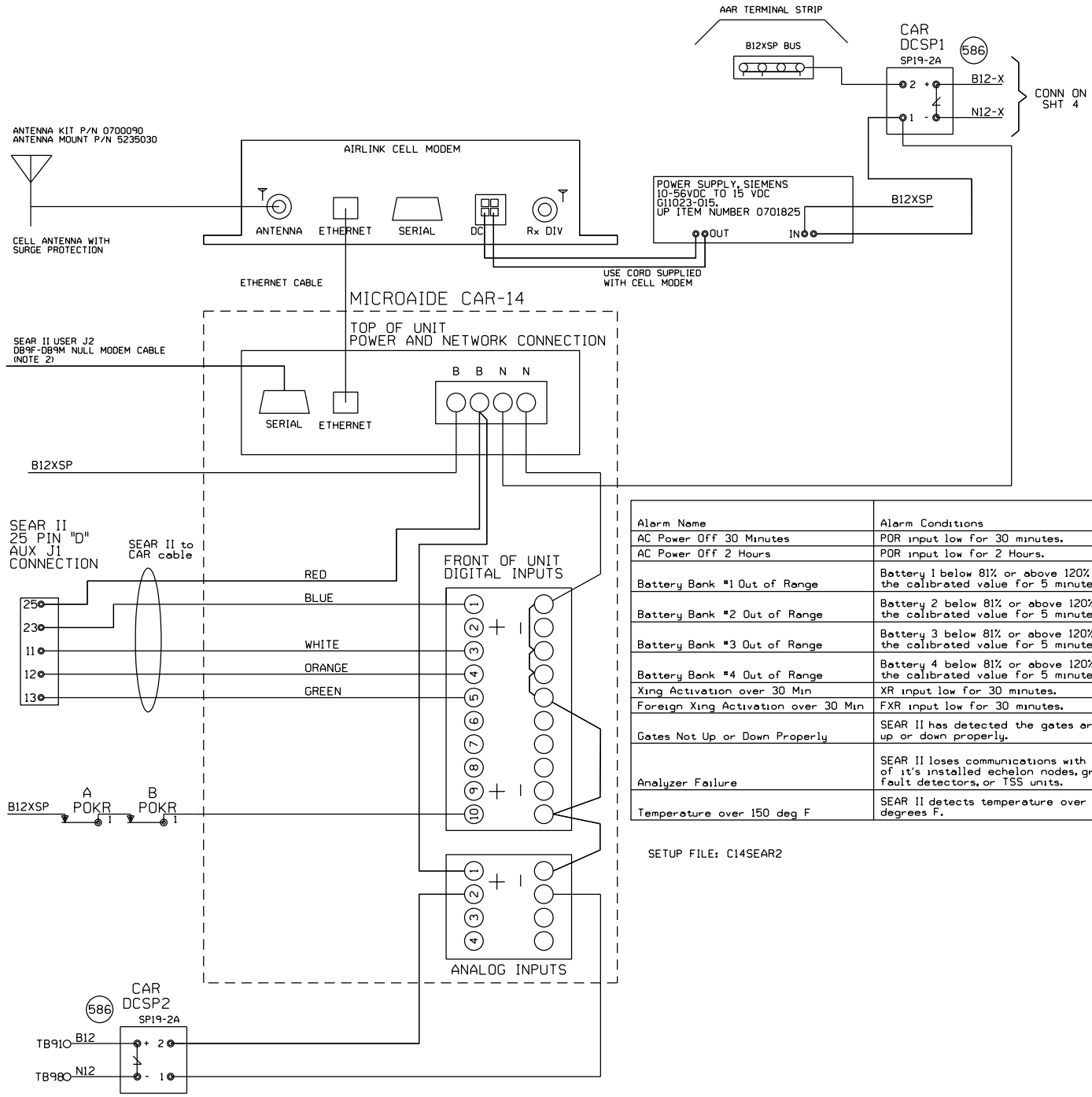

NOTE:
1) DO NOT JUMPER UNUSED INPUTS
2) THE CAR14 SERIAL PORT IS AVAILABLE TO ADD REMOTE CONNECTIVITY TO EXISTING LOGGING EQUIPMENT. USE NULL MODEM CABLE WITH SHIELDING DISCONNECTED AT ONE OR BOTH SIDES.

ANALOG INPUTS:
A1) B12X BATTERY BANK
A2) B12 BATTERY BANK
A3) BATTERY BANK 3
A4) BATTERY BANK 4

DIGITAL INPUTS
D1) XR (BLUE WIRE)
D2) FOREIGN XR
D3) ANALYZER FAILURE (WHITE WIRE)
D4) HIGH TEMPERATURE (ORANGE WIRE)
D5) GATES NOT UP OR DOWN PROPERLY (GREEN WIRE)
D10) POWER OFF INDICATION

Alarm Name	Alarm Conditions	Alarm Clearing Conditions	Cleared by Maintainer Mode?
AC Power Off 30 Minutes	POR input low for 30 minutes.	POR input high for 5 minutes.	No
AC Power Off 2 Hours	POR input low for 2 Hours.	POR input high for 5 minutes.	No
Battery Bank #1 Out of Range	Battery 1 below 81% or above 120% of the calibrated value for 5 minutes.	Battery 1 within acceptable range for 5 minutes.	No
Battery Bank #2 Out of Range	Battery 2 below 81% or above 120% of the calibrated value for 5 minutes.	Battery 2 within acceptable range for 5 minutes.	No
Battery Bank #3 Out of Range	Battery 3 below 81% or above 120% of the calibrated value for 5 minutes.	Battery 3 within acceptable range for 5 minutes.	No
Battery Bank #4 Out of Range	Battery 4 below 81% or above 120% of the calibrated value for 5 minutes.	Battery 4 within acceptable range for 5 minutes.	No
Xing Activation over 30 Min	XR input low for 30 minutes.	XR input high for 10 seconds.	Yes
Foreign Xing Activation over 30 Min	FXR input low for 30 minutes.	FXR input high for 10 seconds.	Yes
Gates Not Up or Down Properly	SEAR II has detected the gates are not up or down properly.	SEAR II has detected the gates are up or down properly.	No
Analyzer Failure	SEAR II loses communications with any of it's installed echelon nodes, ground fault detectors, or TSS units.	SEAR II has recovered after an analyzer failure alarm.	No
Temperature over 150 deg F	SEAR II detects temperature over 150 degrees F.	SEAR II sensor detects temperature is OK after a High-Temp alarm.	No

SETUP FILE: C14SEAR2

NEW SHEET

Designed: 07/01/14
INSTALL FLASHERS, GATES, AND CWT AT M.P. 260.56 GREEN HEDGE ROAD
PID: 87034 WO#: 25081
IS: Rec#: CAM JTB

MODIFICATION LEVEL	
Q. A. LAST LEVEL CHECKED	DU
LAST LEVEL MOD THIS TYPICAL	DU
LAST LEVEL BY DESIGNER	DU
CHANGED FROM TYPICAL?	Y

REV 01.24.11 4K ACDCCAR14S11.3

CIRCUIT MODIFICATIONS ARE NOT TO BE MADE WITHOUT AUTHORITY FROM THE OFFICE OF SIGNAL DESIGN

Date: 07/01/14
Des: CAM Chk:
PID: 87034
AFE: 25081

UNION PACIFIC RAILROAD
WORDEN, ILLINOIS
GREEN HEDGE ROAD
PANA SUBDIVISION
Office of AVP Engineering - Signal Omaha, Nebraska

Sh.: 2A
DOT 542215V
MP: 260.56
ID: 030226056.2AX

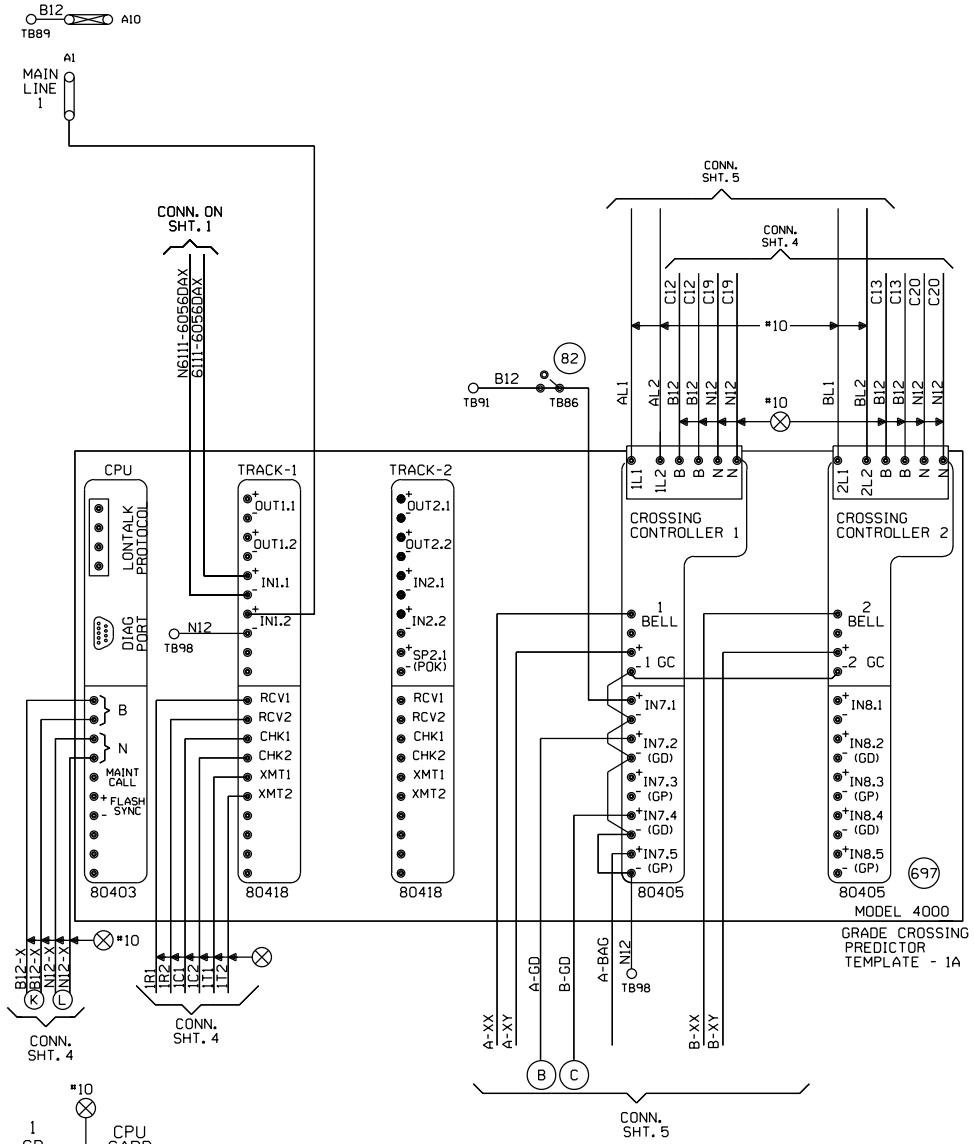

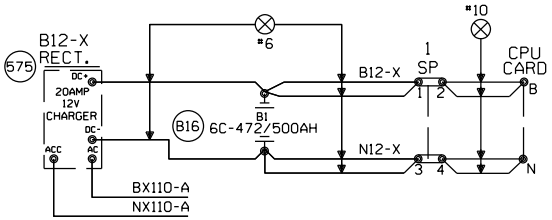

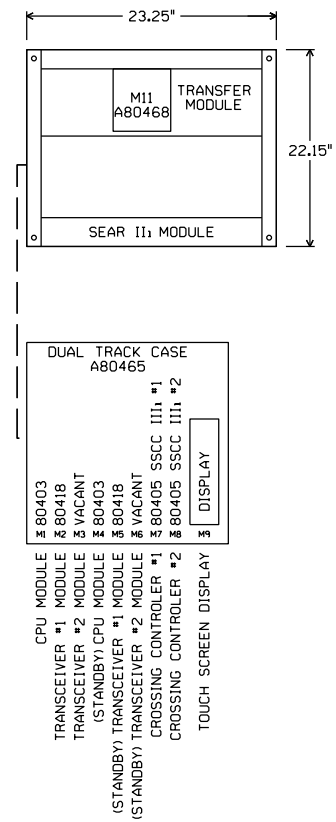

"Mf" FREQUENCY (HZ)	MAXIMUM TRANSMIT WIRE LENGTH (FEET)
86	100
114	125
156	150
211	200
285-970	250

NOTE:
EACH TRANSMITTER TO RAIL WIRE FROM XMT1 AND XMT2 MUST NOT EXCEED THE MAXIMUM LENGTH SPECIFIED IN THE TABLE SHOWN. THE RECEIVER WIRE LENGTH IS NOT CRITICAL. DOES NOT APPLY TO 6 TRACK WIRE APPLICATION.

NEW SHEET

Designed: 07/01/14
INSTALL FLASHERS, GATES, AND CWT AT M.P. 260.56 GREEN HEDGE ROAD
PID: 87034 WO#: 25081
IS: Rec#: CAM JTB

MODIFICATION LEVEL	
Q. A. LAST LEVEL CHECKED	DU
LAST LEVEL MOD THIS TYPICAL	DU
LAST LEVEL BY DESIGNER	DU
CHANGED FROM TYPICAL?	Y

REV 01.24.11 4K 2TKGF.3

CIRCUIT MODIFICATIONS ARE NOT TO BE MADE WITHOUT AUTHORITY FROM THE OFFICE OF SIGNAL DESIGN

Date: 07/01/14
Des: CAM Chk:
PID: 87034
AFE: 25081

UNION PACIFIC RAILROAD
WORDEN, ILLINOIS
GREEN HEDGE ROAD
PANA SUBDIVISION
Office of AVP Engineering - Signal Omaha, Nebraska

Sh.: 3
DOT 542215V
MP: 260.56
ID: 030226056.3X

Minimum Program Steps Report

Location and SIN

DOT Number: 542215V
Milepost Number: 260.56
Site Name: WORDEN, IL

SIN: 762010010016 *

* Parameter is part of office check number calculation.

MCF and Template Selection

MCF Name: GCP-T6X-02-4.mcf
MCF Revision: 24
MCFCRC: 09FC363B

Template = 1A:6 Trk Bi (OCCN) *

* Parameter is part of office check number calculation.

Minimum Program Steps

TEMPLATE: track 1-Bi, Island
Track 1 : GCP Frequency = 285 Hz (Field,TCN)
Track 1 : Approach Distance = 3492 ft (Set in Field,TCN)
Track 1 : Prime Warning Time = 29 sec (OCCN) *
Track 1 : Prime UAX = IP (OCCN) *
Track 1 : Prime UAX Pickup = 15 sec (OCCN) *
Track 1 : GCP Transmit Level = Medium (Set in Field,TCN)
Track 1 : Isl Frequency = 10.0 kHz (Set in Field)

TEMPLATE: AND 1 XR
AND 1 Enable Used = Yes (OCCN) *

TEMPLATE: SSCC
SSCC 1 : Lamp Neutral Test = Off (Set in Field)
SSCC 2 : Lamp Neutral Test = Off (Set in Field)

TEMPLATE: OOS
OOS Control = OOS IPs (OCCN) *

TEMPLATE: IP assignment 1
IN 1.1 = T1 Prime UAX (OCCN) *
IN 1.2 = Out Of Service IP 1 (OCCN) *

TEMPLATE: IP assignment SSCC
IN 7.1 = AND 1 XR Enable (OCCN) *

GCP: track 1
Track 1 : Island Distance = 120 ft (Set in Field,TCN)

ISLAND: track 1
Track 1 : Pickup Delay (2s +) = 2 sec (OCCN) *

ADVANCED: site options
Daylight Savings = Off (Set in Field)

* Parameter is part of office check number calculation.

Check Numbers

Office Check Number: 0C8C781B
Config. Check Number: 4C356EEA
(Based on MCF Revision 24)

Parameters not part of office check number calculation:

Track 1 : GCP Frequency = 285 Hz
Track 1 : Approach Distance = 3492 ft (Set in Field)
Track 1 : GCP Transmit Level = Medium (Set in Field)
Track 1 : Isl Frequency = 10.0 kHz
SSCC 1 : Lamp Neutral Test = Off (Set in Field)
SSCC 2 : Lamp Neutral Test = Off (Set in Field)
Track 1 : Island Distance = 120 ft (Set in Field)
Daylight Savings = Off (Set in Field)

Comments

<none>

Configuration Package File

Filename: 030226056_542215V.pac
Path: P:\DRAWINGS\UPRR Design\WO 25081 - SD14122 - Green Hedge Road\01 Crossing Design\
Date/Time: 9/08/2014 14:44:02

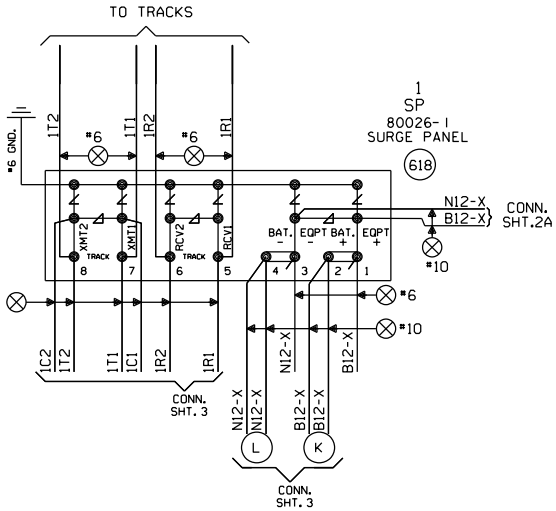

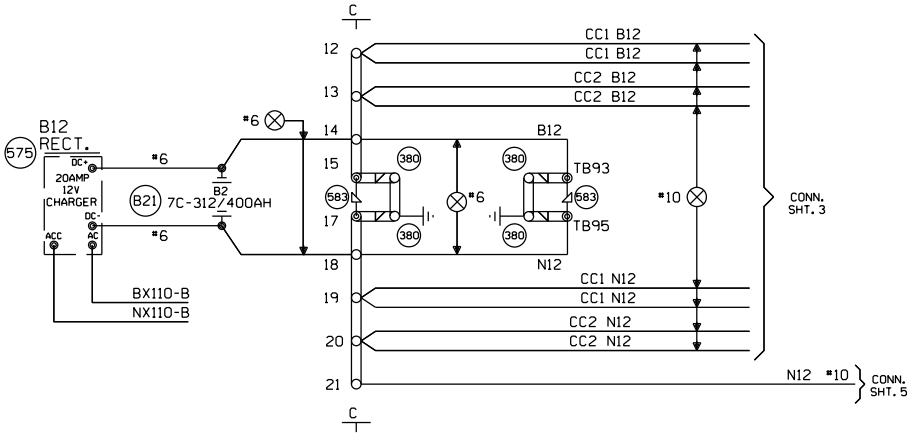

NEW SHEET

Designed: 07/01/14 INSTALL FLASHERS, GATES, AND CWT AT M.P. 260.56 GREEN HEDGE ROAD PID: 87034 WO#: 25081 IS: / Rec#: / CAM/JTB	MODIFICATION LEVEL		CIRCUIT MODIFICATIONS ARE NOT TO BE MADE WITHOUT AUTHORITY FROM THE OFFICE OF SIGNAL DESIGN	Date: 07/01/14 Des: CAM Chk: PID: 87034 AFE: 25081	UNION PACIFIC RAILROAD WORDEN, ILLINOIS GREEN HEDGE ROAD PANA SUBDIVISION Office of AVP Engineering - Signal Omaha, Nebraska	Sh.: 4 DOT 542215V MP: 260.56 ID: 030226056.4X
	Q. A. LAST LEVEL CHECKED	DU				
	LAST LEVEL MOD THIS TYPICAL	DU				
	LAST LEVEL BY DESIGNER	DU				
	CHANGED FROM TYPICAL?	Y				
	REV 01.24.11 4K 4TKSPGFC.4					

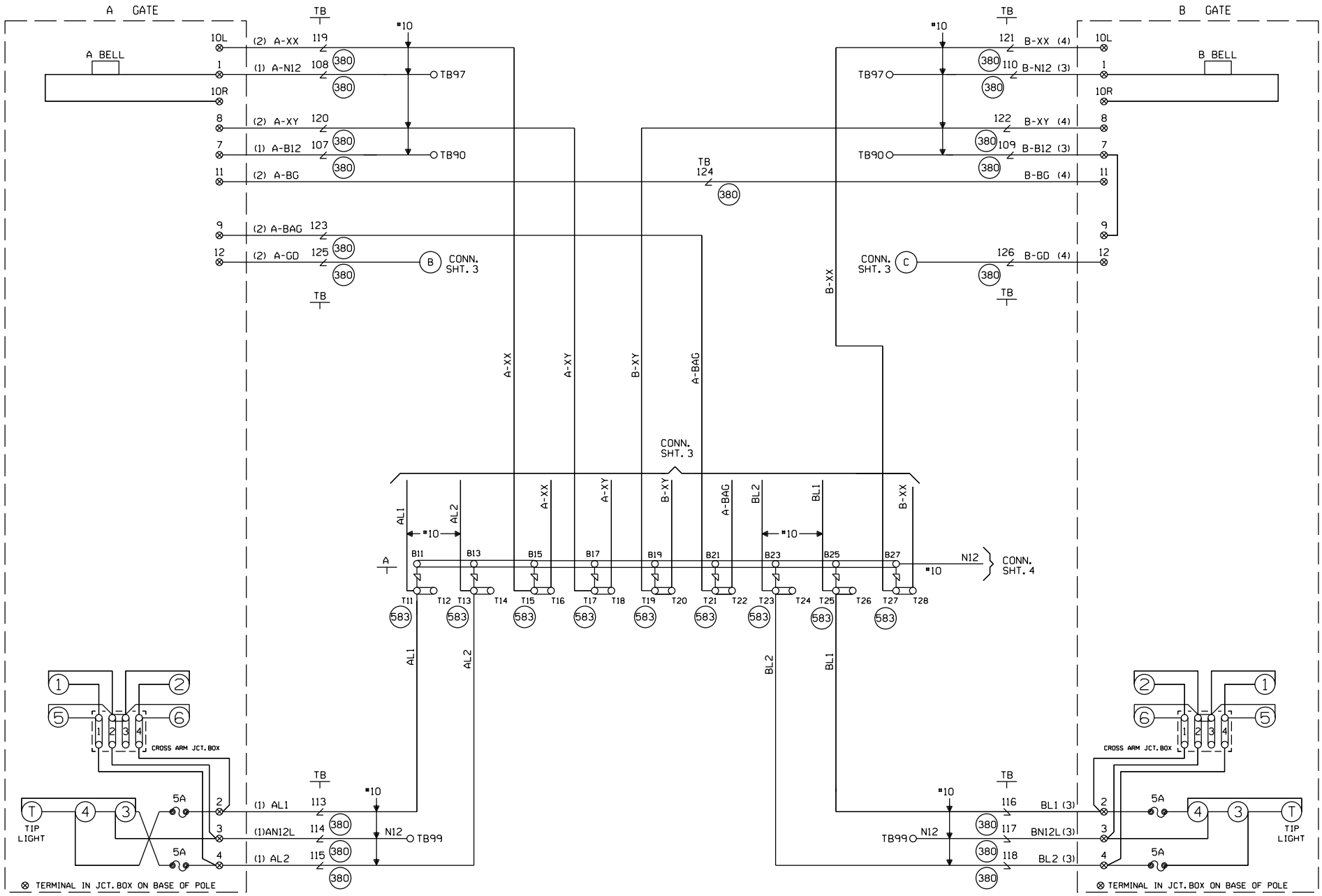

CABLE TABULATION

CABLE NO. 1 5C. NO.6 U.G.B.T. TO GATE A
CABLE NO. 2 7C. NO.14 U.G.B.T. TO GATE A
CABLE NO. 3 5C. NO.6 U.G.B.T. TO GATE B
CABLE NO. 4 7C. NO.14 U.G.B.T. TO GATE B

NEW SHEET

Designed: 07/01/14
INSTALL FLASHERS, GATES, AND CWT AT M.P. 260.56 GREEN HEDGE ROAD
PID: 87034 WO#: 25081
IS: Rec#: CAM/JTB

MODIFICATION LEVEL	
Q. A. LAST LEVEL CHECKED	DU
LAST LEVEL MOD THIS TYPICAL	DU
LAST LEVEL BY DESIGNER	DU
CHANGED FROM TYPICAL?	Y

REV 01.24.11 4K GFSLTYP.5

CIRCUIT MODIFICATIONS ARE NOT TO BE MADE WITHOUT AUTHORITY FROM THE OFFICE OF SIGNAL DESIGN

Date: 07/01/14
Des: CAM Chk:
PID: 87034
AFE: 25081

UNION PACIFIC RAILROAD
WORDEN, ILLINOIS
GREEN HEDGE ROAD
PANA SUBDIVISION
Office of AVP Engineering - Signal Omaha, Nebraska

Sh.: 5
DOT 542215V
MP: 260.56
ID: 030226056.5X

WCH 3593-E

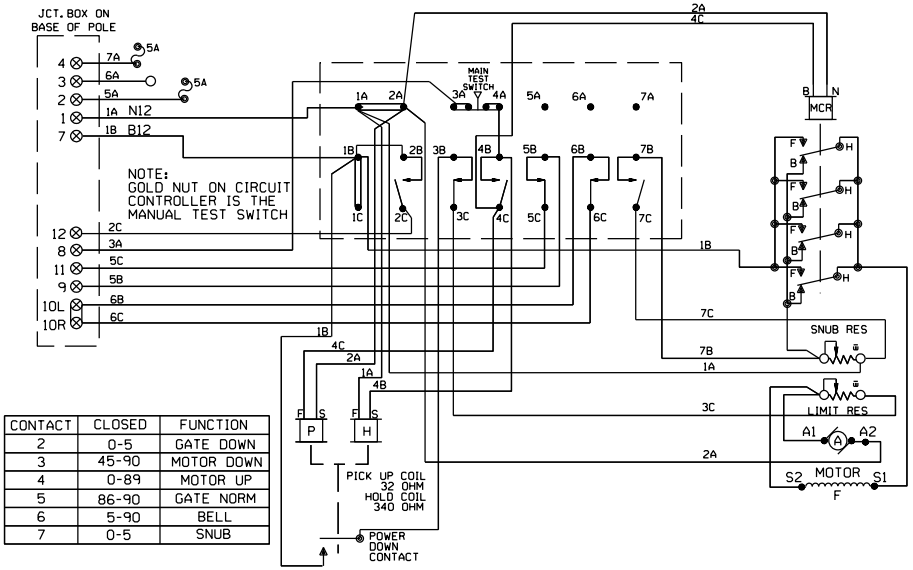

CONTACT	CLOSED	FUNCTION
2	0-5	GATE DOWN
3	45-90	MOTOR DOWN
4	0-89	MOTOR UP
5	86-90	GATE NORM
6	5-90	BELL
7	0-5	SNUB

WCH 3597-E

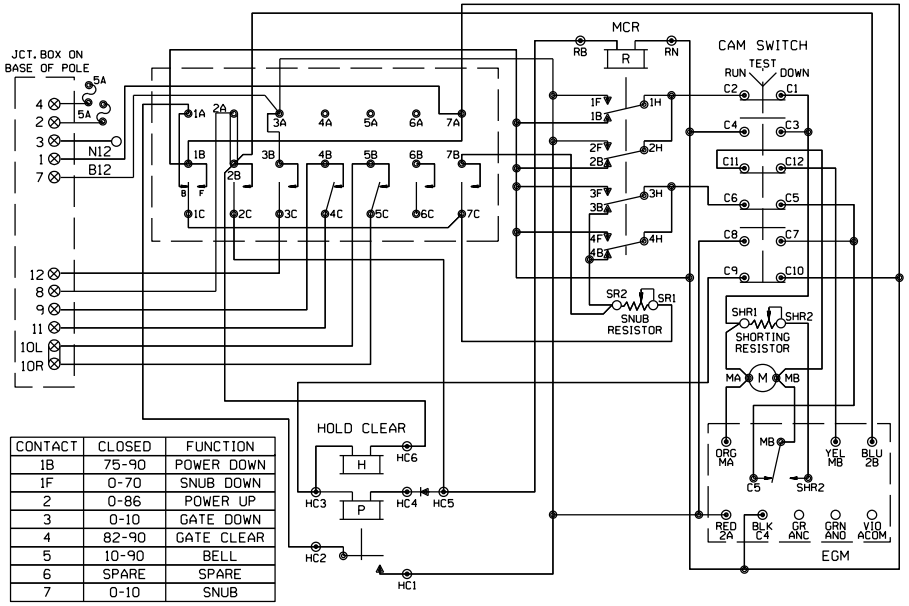

CONTACT	CLOSED	FUNCTION
1B	75-90	POWER DOWN
1F	0-70	SNUB DOWN
2	0-86	POWER UP
3	0-10	GATE DOWN
4	82-90	GATE CLEAR
5	10-90	BELL
6	SPARE	SPARE
7	0-10	SNUB

WCH 3597-RB

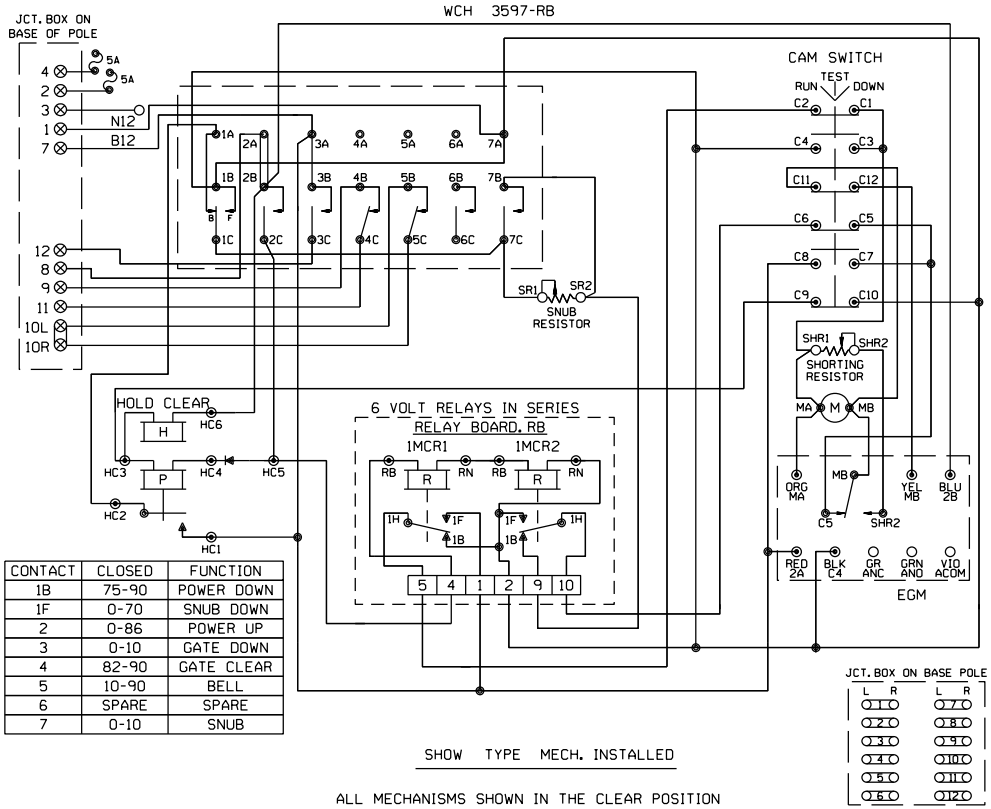

CONTACT	CLOSED	FUNCTION
1B	75-90	POWER DOWN
1F	0-70	SNUB DOWN
2	0-86	POWER UP
3	0-10	GATE DOWN
4	82-90	GATE CLEAR
5	10-90	BELL
6	SPARE	SPARE
7	0-10	SNUB

SHOW TYPE MECH. INSTALLED

ALL MECHANISMS SHOWN IN THE CLEAR POSITION

SAFETRAN S-60

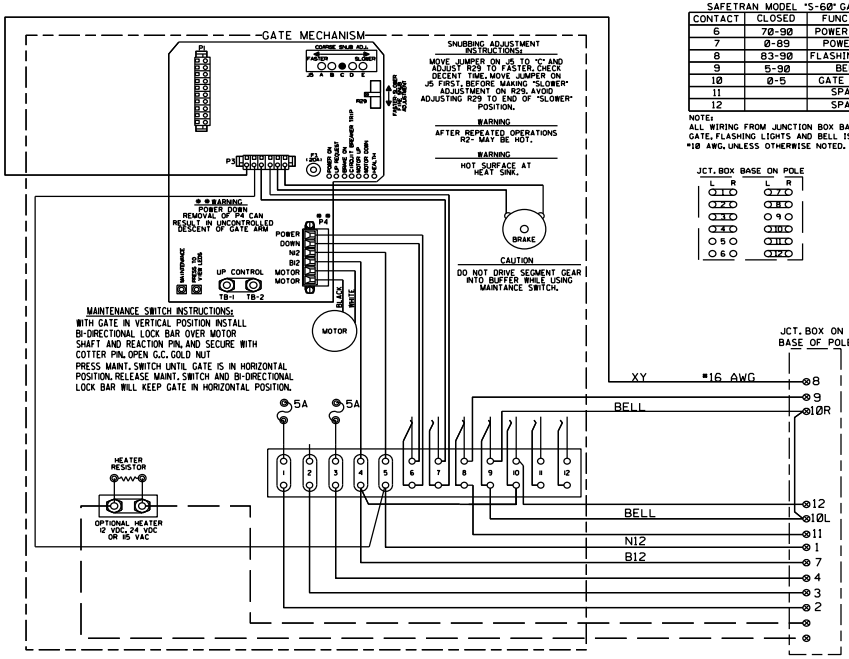

SAFETRAN MODEL "S-60" GATE

CONTACT	CLOSED	FUNCTION
6	70-90	POWER DOWN
7	0-89	POWER UP
8	83-90	FLASHING LGT.
9	5-90	BELL
10	0-5	GATE DOWN
11		SPARE
12		SPARE

NOTE:
ALL WIRING FROM JUNCTION BOX BASE TO GATE, FLASHING LIGHTS AND BELL IS TO BE #10 AWG, UNLESS OTHERWISE NOTED.

JCT. BOX BASE ON POLE

NEW SHEET

Designed: 07/01/14
INSTALL FLASHERS, GATES, AND CWT AT M.P. 260.56 GREEN HEDGE ROAD
PID: 87034 WO#: 25081
IS: Rec#: CAM/JTB

MODIFICATION LEVEL	
Q. A. LAST LEVEL CHECKED	DU
LAST LEVEL MOD THIS TYPICAL	DU
LAST LEVEL BY DESIGNER	DU
CHANGED FROM TYPICAL?	N

REV 01.24.11 4K GWIRING.7

CIRCUIT MODIFICATIONS ARE NOT TO BE MADE WITHOUT AUTHORITY FROM THE OFFICE OF SIGNAL DESIGN

Date: 07/01/14
Des: CAM Chk:
PID: 87034
AFE: 25081

UNION PACIFIC RAILROAD

WORDEN, ILLINOIS
GREEN HEDGE ROAD
PANA SUBDIVISION

Office of AVP Engineering - Signal Omaha, Nebraska

Sh.: 6
DOT 542215V
MP: 260.56
ID: 030226056.6X

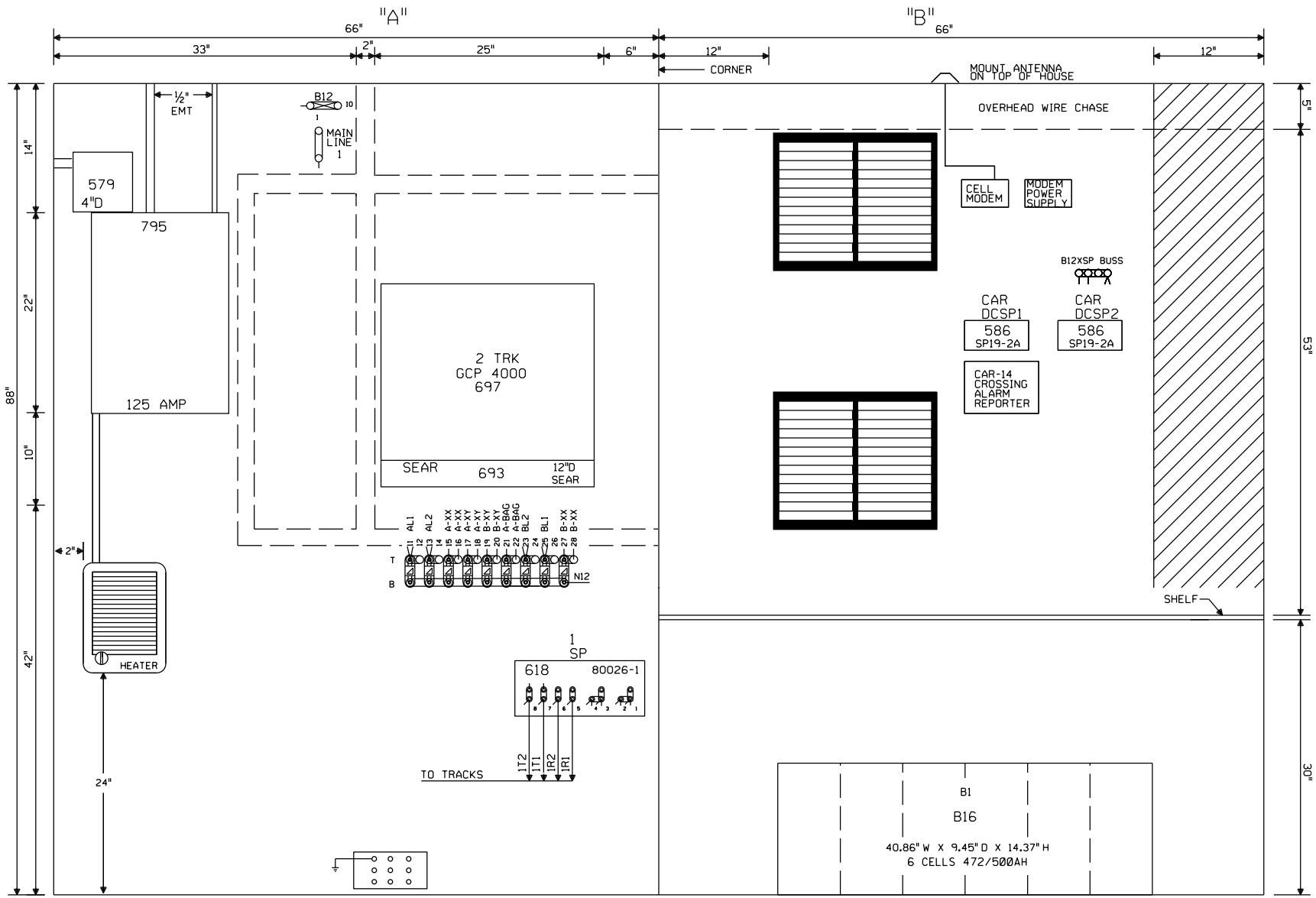

NOTE: ALL DIMENSIONS SHOWN ARE APPROXIMATE.

NEW SHEET

Designed: 07/01/14
INSTALL FLASHERS, GATES, AND CWT AT M.P. 260.56 GREEN HEDGE ROAD
PID: 87034 WO#: 25081
IS: Rec#: CAM/JTB

MODIFICATION LEVEL	
Q. A. LAST LEVEL CHECKED	DU
LAST LEVEL MOD THIS TYPICAL	DU
LAST LEVEL BY DESIGNER	DU
CHANGED FROM TYPICAL?	Y

REV 01.24.11 4K 4TKGFC.8

CIRCUIT MODIFICATIONS ARE NOT TO BE MADE WITHOUT AUTHORITY FROM THE OFFICE OF SIGNAL DESIGN

Date: 07/01/14
Des: CAM Chk:
PID: 87034
AFE: 25081

UNION PACIFIC RAILROAD
WORDEN, ILLINOIS
GREEN HEDGE ROAD
PANA SUBDIVISION
Office of AVP Engineering - Signal Omaha, Nebraska

Sh.: 7
DOT 542215V
MP: 260.56
ID: 030226056.7X

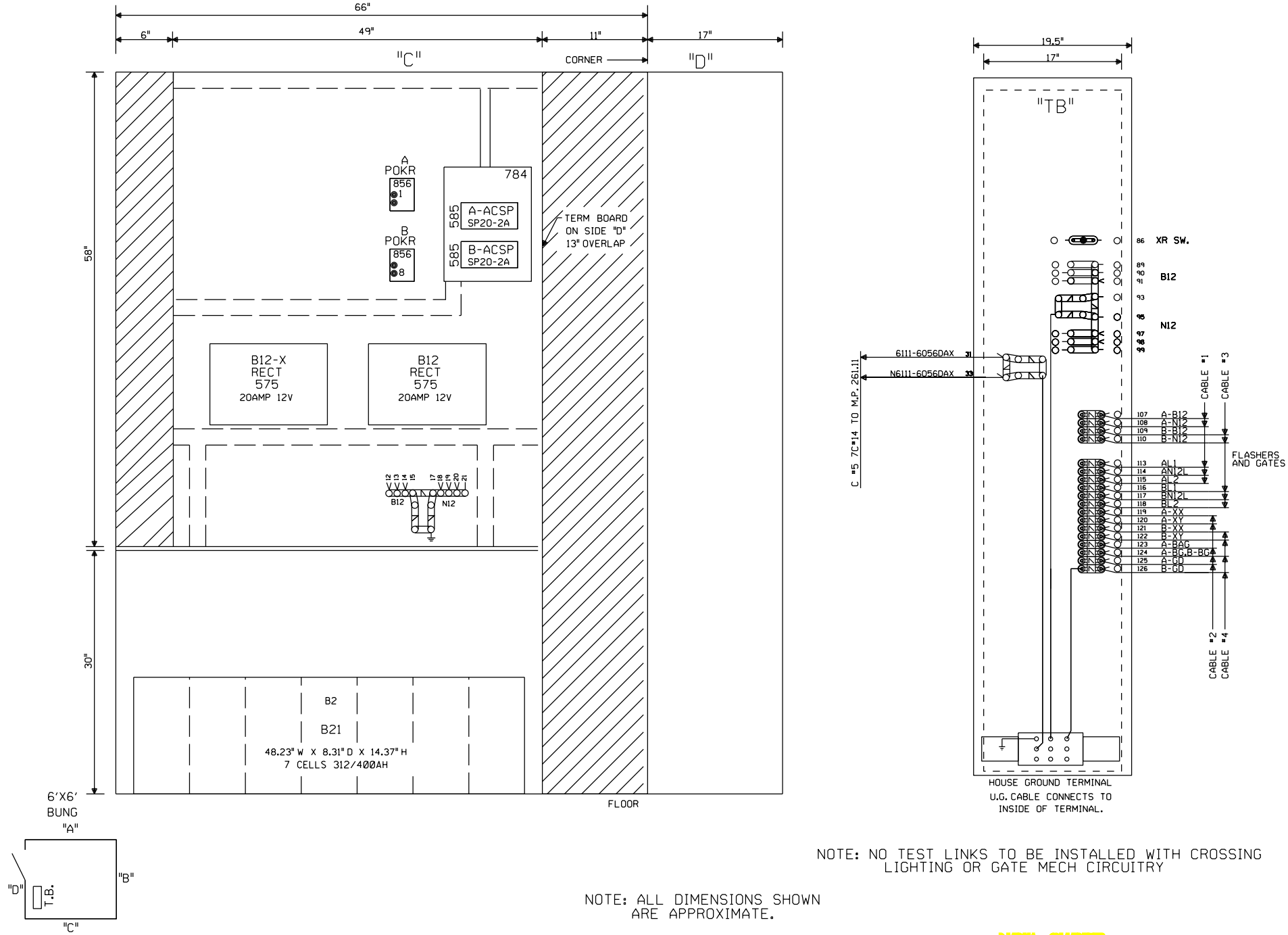

NOTE: NO TEST LINKS TO BE INSTALLED WITH CROSSING LIGHTING OR GATE MECH CIRCUITRY

NOTE: ALL DIMENSIONS SHOWN ARE APPROXIMATE.

NEW SHEET

Designed: 07/01/14
INSTALL FLASHERS, GATES, AND CWT AT M.P. 260.56 GREEN HEDGE ROAD
PID: 87034 WO#: 25081
IS: /
Rec#: / CAM/JTB

MODIFICATION LEVEL	
Q. A. LAST LEVEL CHECKED	DU
LAST LEVEL MOD THIS TYPICAL	DU
LAST LEVEL BY DESIGNER	DU
CHANGED FROM TYPICAL?	Y

REV 01.24.11 4K GFC.9

CIRCUIT MODIFICATIONS ARE NOT TO BE MADE WITHOUT AUTHORITY FROM THE OFFICE OF SIGNAL DESIGN

Date: 07/01/14
Des: CAM Chk:
PID: 87034
AFE: 25081

UNION PACIFIC RAILROAD
WORDEN, ILLINOIS
GREEN HEDGE ROAD
PANA SUBDIVISION
Office of AVP Engineering - Signal Omaha, Nebraska

Sh.: 8
DOT 542215V
MP: 260.56
ID: 030226056.8X

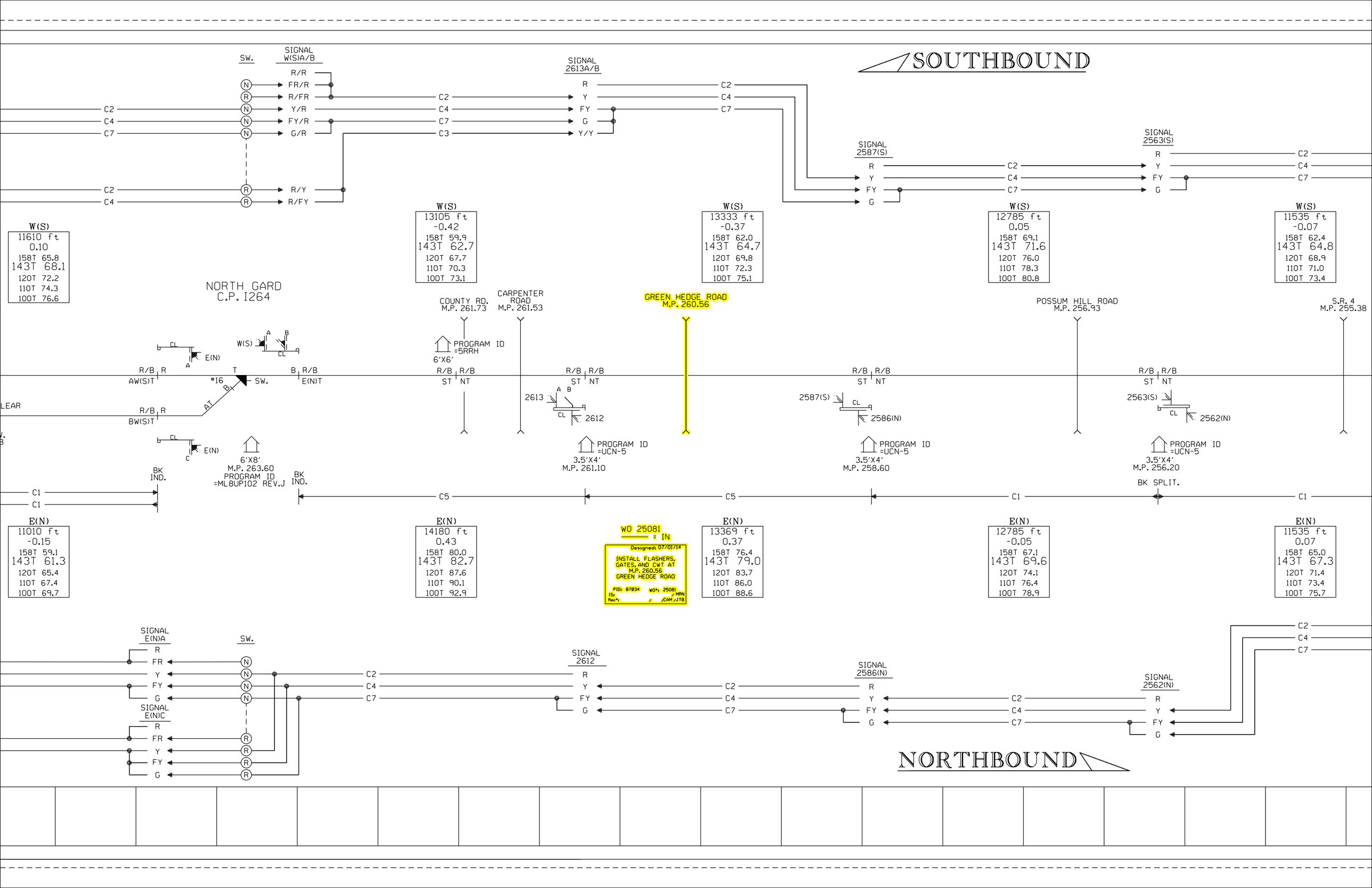
SOUTHBOUND
SIGNAL W(S)A/B
SW.
R/R
FR/R
R/FR
Y/R
FY/R
G/R
R/Y
R/FY
SIGNAL 2613A/B
SIGNAL 2587(S)
SIGNAL 2563(S)
W(S)
11610 ft
0.10
158T 65.8
143T 68.1
120T 72.2
110T 74.3
100T 76.6
W(S)
13105 ft
-0.42
158T 59.9
143T 62.7
120T 67.7
110T 70.3
100T 73.1
W(S)
13333 ft
-0.37
158T 62.0
143T 64.7
120T 69.8
110T 72.3
100T 75.1
W(S)
12785 ft
0.05
158T 69.1
143T 71.6
120T 76.0
110T 78.3
100T 80.8
W(S)
11535 ft
-0.07
158T 62.4
143T 64.8
120T 68.9
110T 71.0
100T 73.4
NORTH GARD
C.P. I264
COUNTY RD.
M.P. 261.73
CARPENTER ROAD
M.P. 261.53
GREEN HEDGE ROAD
M.P. 260.56
POSSUM HILL ROAD
M.P. 256.93
S.R. 4
M.P. 255.38
PROGRAM ID =5RRH
6'X6'
R/B R
AW(S)T
#16
SW.
B R/B
E(N)T
R/B R
BW(S)T
R/B R/B
ST NT
2613
2612
2587(S)
2586(N)
2563(S)
2562(N)
PROGRAM ID =UCN-5
3.5'X4'
M.P. 261.10
3.5'X4'
M.P. 258.60
3.5'X4'
M.P. 256.20
6'X8'
M.P. 263.60
PROGRAM ID =ML8UP102 REV.J
BK IND.
BK SPLIT.
E(N)
11010 ft
-0.15
158T 59.1
143T 61.3
120T 65.4
110T 67.4
100T 69.7
E(N)
14180 ft
0.43
158T 80.0
143T 82.7
120T 87.6
110T 90.1
100T 92.9
WO 25081
= IN
Designed: 07/01/14
INSTALL FLASHERS, GATES, AND CWT AT M.P. 260.56 GREEN HEDGE ROAD
PID: 87034
WO#: 25081
IS: /MRN
Rec#: / /CAM /JTB
E(N)
13369 ft
0.37
158T 76.4
143T 79.0
120T 83.7
110T 86.0
100T 88.6
E(N)
12785 ft
-0.05
158T 67.1
143T 69.6
120T 74.1
110T 76.4
100T 78.9
E(N)
11535 ft
0.07
158T 65.0
143T 67.3
120T 71.4
110T 73.4
100T 75.7
SIGNAL E(N)A
SIGNAL E(N)C
SIGNAL 2612
SIGNAL 2586(N)
SIGNAL 2562(N)
NORTHBOUND

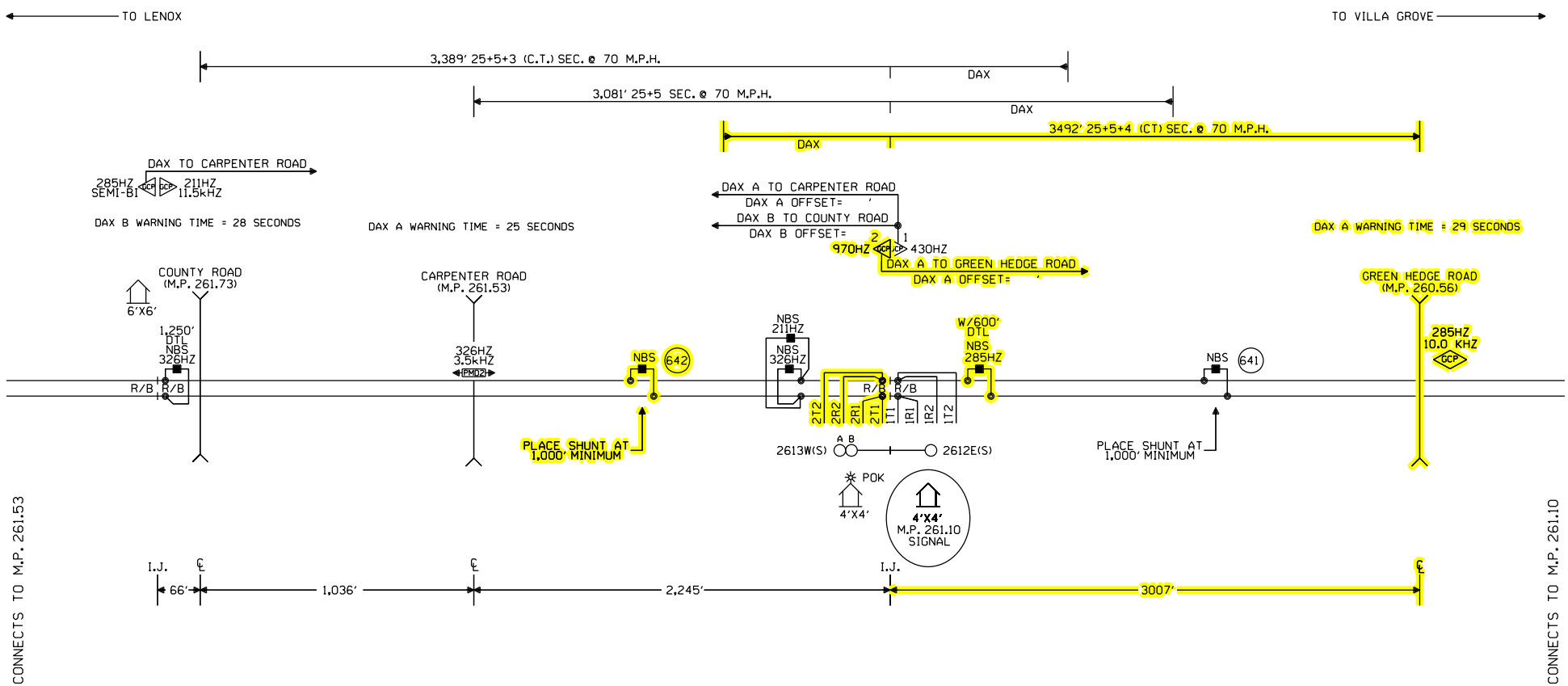

NOTES:

⊗ = TWISTED WIRES
ALL TRACK WIRES 2C. #6
INSULATED 1 TWIST PER FT.

TRANSMITTER AND RECEIVER LEADS TO BE SEPARATED BY AT LEAST 12" IN TRENCH. LENGTHS SHOULD NOT EXCEED MANUFACTURER'S RECOMMENDATION.

ALL BUNGALOW WIRING TO BE #16 AWG FLEX UNLESS OTHERWISE SPECIFIED EXCEPT ALL GROUND WIRE TO BE #6 AWG FLEX OR LARGER.

REFER TO UP STANDARD DWG. FOR BUNGALOW GROUNDING.

PORTABLE GENERATOR EXTENSION CORD FOR 240V TO 240V IS PROVIDED AS WELL AS A 120V TO 240V ADAPTER.

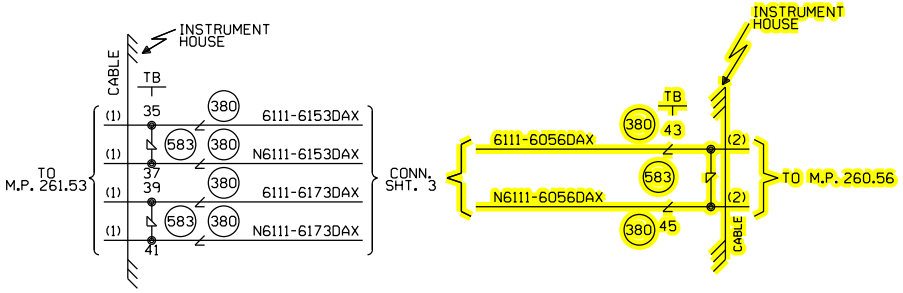

W(S) ←○→ E(N)

= EXISTING REVISE

WO 25081 = IN

CABLE TABULATION

CABLE NO.1 7C#14 U.G.B.T. HOUSE TO M.P. 261.53
CABLE NO.2 7C#14 U.G.B.T. HOUSE TO M.P. 260.56

				Designed: 07/01/14 INSTALL FLASHERS, GATES, AND CWT AT M.P. 260.56 GREEN HEDGE ROAD PID: 87034 WO#: 25081 IS: MRN Rec#: CAM/JTB	Revised: 9/24/13 INTALL FLS/GATES & CONSTANT WARNING AT COUNTY ROAD M.P. 261.73 Rec#: 19537 WO#: 11994 IS: 8/7/13 AJA MJD/XRL/CTC/JTB	MODIFICATION LEVEL Q. A. LAST LEVEL CHECKED DU LAST LEVEL MOD THIS TYPICAL DU LAST LEVEL BY DESIGNER DU CHANGED FROM TYPICAL? Y REV 01.24.11 4K REMOTE.1	CIRCUIT MODIFICATIONS ARE NOT TO BE MADE WITHOUT AUTHORITY FROM THE OFFICE OF SIGNAL DESIGN	Date: 12/22/11 Des: CTC Chk: JPW AFE: 11994	UNION PACIFIC RAILROAD WORDEN, ILLINOIS REMOTE LOCATION PANA SUBDIVISION Office of Sr AVP Engineering - Signal/TCO Omaha, Nebraska	Sh.: 1 DOT 000000R MP: 261.11 ID: 030226111.1X

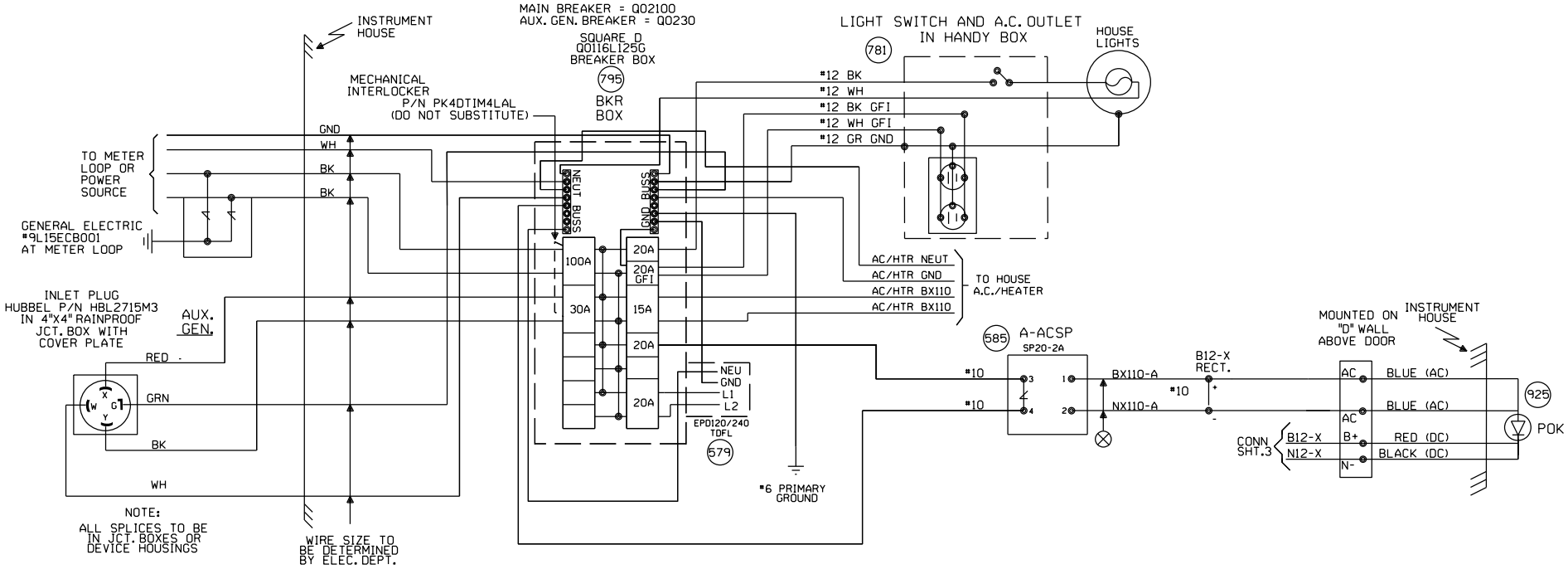

					Revised: 9/24/13 INTALL FLS/GATES & CONSTANT WARNING AT COUNTY ROAD M.P. 261.73 Rec#: 19537 WO#: 11994 IS: 8/7/13 /AJA MJD/XRL/CTC/JTB	MODIFICATION LEVEL Q. A. LAST LEVEL CHECKED DU LAST LEVEL MOD THIS TYPICAL DU LAST LEVEL BY DESIGNER DU CHANGED FROM TYPICAL? Y REV 01.24.11 4K SEARAC.2	CIRCUIT MODIFICATIONS ARE NOT TO BE MADE WITHOUT AUTHORITY FROM THE OFFICE OF SIGNAL DESIGN	Date: 12/22/11 Des: CTC Chk: AJA AFE: 11994	UNION PACIFIC RAILROAD WORDEN, ILLINOIS REMOTE LOCATION PANA SUBDIVISION Office of Sr AVP Engineering - Signal/TCO Omaha, Nebraska	Sh.: 2 DOT 000000R MP: 261.11 ID: 030226111.2X

Minimum Program Steps Report

Location and SIN

DOT Number: 000000R
Milepost Number: 261.11
Site Name: WORDEN, IL

SIN: 762010010016 *

* Parameter is part of office check number calculation.

MCF and Template Selection

MCF Name: GCP-T6X-02-4.mcf
MCF Revision: 24
MCFCRC: 09FC363B
UCN: FFFFFFFF

Template = 4A:6 Remotes (OCCN) *

* Parameter is part of office check number calculation.

Minimum Program Steps

TEMPLATE: module configuration
Track 2/RIO 1 Slot = Track (OCCN) *

TEMPLATE: track 1-Remote Dax
Track 1 : GCP Frequency = 430 Hz (Field,TCN)
Track 1 : Approach Distance = 1000 ft (Set in Field,TCN)
Track 1 : Dax A Warning Time = 25 sec (OCCN) *
Track 1 : Dax A Offset Distance = 2192 ft (Set in Field)
Track 1 : GCP Transmit Level = Medium (Set in Field,TCN)

TEMPLATE: track 1-Remote Daxes
Track 1 : Dax B Used = Yes (OCCN) *
Track 1 : Dax B Warning Time = 28 sec (OCCN) *
Track 1 : Dax B Offset Distance = 3214 ft (Set in Field)

TEMPLATE: track 2-Remote Dax
Track 2 : GCP Frequency = 970 Hz (Field,TCN)
Track 2 : Approach Distance = 1000 ft (Set in Field,TCN)
Track 2 : Dax A Warning Time = 29 sec (OCCN) *
Track 2 : Dax A Offset Distance = 2947 ft (Set in Field)
Track 2 : GCP Transmit Level = Medium (Set in Field,TCN)

TEMPLATE: track Anding
AND 1 XR Used = No (OCCN) *

TEMPLATE: OOS
OOS Timeout = 1 hrs (Set in Field)

TEMPLATE: OP assignment 1
OUT 1.1 = T1 Dax A (OCCN) *
OUT 1.2 = T1 Dax B (OCCN) *
OUT 2.1 = T2 Dax A (OCCN) *

ADVANCED: site options
Daylight Savings = Off (Set in Field)

* Parameter is part of office check number calculation.

Check Numbers

Office Check Number: 60F4559B
Config. Check Number: 7A27C16E
(Based on MCF Revision 24)

Parameters not part of office check number calculation:

Track 1 : GCP Frequency = 430 Hz
Track 1 : Approach Distance = 1000 ft (Set in Field)
Track 1 : Dax A Offset Distance = 2192 ft (Set in Field)
Track 1 : GCP Transmit Level = Medium (Set in Field)
Track 1 : Dax B Offset Distance = 3214 ft (Set in Field)
Track 2 : GCP Frequency = 970 Hz
Track 2 : Approach Distance = 1000 ft (Set in Field)
Track 2 : Dax A Offset Distance = 2947 ft (Set in Field)
Track 2 : GCP Transmit Level = Medium (Set in Field)
OOS Timeout = 1 hrs (Set in Field)
Daylight Savings = Off (Set in Field)

Comments

<none>

Configuration Package File

Filename: 030226111_000000R.pac
Path: P:\DRAWINGS\UPRR Design\WO 25081 - SD14122 - Green Hedge Road\07 Tie-In Plans\261.11 REMOTE\
Date/Time: 8/18/2014 8:46:34

Minimum Program Steps Report

Location and SIN

DOT Number: 000000R
Milepost Number: 261.11
Site Name: WORDEN, IL

SIN: 762010010016 *

* Parameter is part of office check number calculation.

MCF and Template Selection

MCF Name: GCP-T6X-02-4.mcf
MCF Revision: 24
MCFCRC: 09FC363B

Template = 4A:6 Remotes (OCCN) *

* Parameter is part of office check number calculation.

Minimum Program Steps

TEMPLATE: track 1-Remote Dax
Track 1 : GCP Frequency = 430 Hz (Field,TCN)
Track 1 : Approach Distance = 1000 ft (Set in Field,TCN)
Track 1 : Dax A Warning Time = 25 sec (OCCN) *
Track 1 : Dax A Offset Distance = 2192 ft (Set in Field)
Track 1 : GCP Transmit Level = Medium (Set in Field,TCN)

TEMPLATE: track 1-Remote Daxes
Track 1 : Dax B Used = Yes (OCCN) *
Track 1 : Dax B Warning Time = 28 sec (OCCN) *
Track 1 : Dax B Offset Distance = 3214 ft (Set in Field)

TEMPLATE: track Anding
AND 1 XR Used = No (OCCN) *

TEMPLATE: OOS
OOS Timeout = 1 hrs (Set in Field)

TEMPLATE: OP assignment 1
OUT 1.1 = T1 Dax A (OCCN) *
OUT 1.2 = T1 Dax B (OCCN) *

ADVANCED: site options
Daylight Savings = On (Set in Field)

* Parameter is part of office check number calculation.

Check Numbers

Office Check Number: 2BFEFE28
Config. Check Number: 1CC59F1C
(Based on MCF Revision 24)

Parameters not part of office check number calculation:

Track 1 : GCP Frequency = 430 Hz
Track 1 : Approach Distance = 1000 ft (Set in Field)
Track 1 : Dax A Offset Distance = 2192 ft (Set in Field)
Track 1 : GCP Transmit Level = Medium (Set in Field)
Track 1 : Dax B Offset Distance = 3214 ft (Set in Field)
OOS Timeout = 1 hrs (Set in Field)
Daylight Savings = On (Set in Field)

Comments

<none>

Configuration Package File

Filename: 030226111_000000R.pac
Path: H:\01-Xing\upT10242\GCP Programs\261.11\
Date/Time: 5/01/2012 18:44:43

TO BE VOIDED
WO 25081 07/01/14

				Revised: 9/24/13 INTALL FLS/GATES & CONSTANT WARNING AT COUNTY ROAD M.P. 261.73 Rec#: 19537 WO#: 11994 IS: 8/7/13 AJA MJD/XRL/CTC/JTB	**NOTE: Actual OFFSET and ISLAND distances must be verified by field personnel.**	CIRCUIT MODIFICATIONS ARE NOT TO BE MADE WITHOUT AUTHORITY FROM THE OFFICE OF SIGNAL DESIGN	Date: 12/22/11 Des: CTC Chk: AJA AFE: 11994	**UNION PACIFIC RAILROAD** WORDEN, ILLINOIS REMOTE LOCATION PANA SUBDIVISION Office of Sr AVP Engineering - Signal/TCO Omaha, Nebraska	Sh.: 3A DOT 000000R MP: 261.11 ID: 030226111.3AX

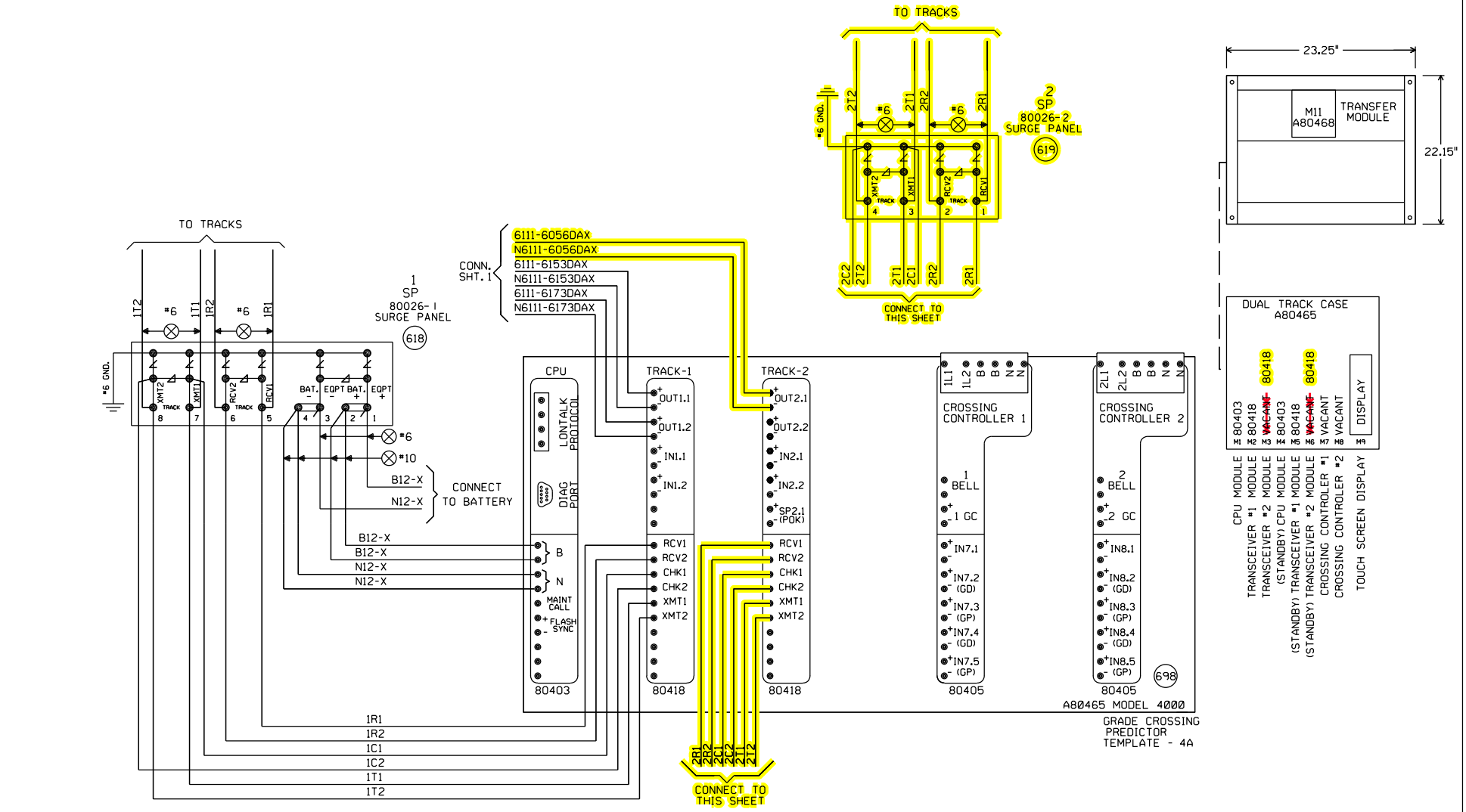

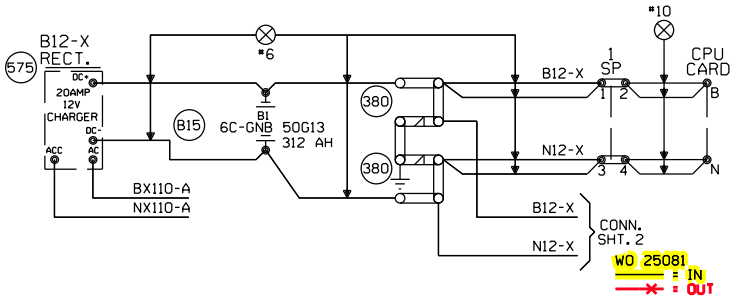

"Mf" FREQUENCY (HZ)	MAXIMUM TRANSMIT WIRE LENGTH (FEET)
86	100
114	125
156	150
211	200
285-970	250

NOTE:
EACH TRANSMITTER TO RAIL WIRE FROM XMT1 AND XMT2 MUST NOT EXCEED THE MAXIMUM LENGTH SPECIFIED IN THE TABLE SHOWN. THE RECEIVER WIRE LENGTH IS NOT CRITICAL. DOES NOT APPLY TO 6 TRACK WIRE APPLICATION.

Designed: 07/01/14
INSTALL FLASHERS, GATES, AND CWT AT M.P. 260.56 GREEN HEDGE ROAD
PID: 87034 WO#: 25081
IS: Rec#:

Revised: 9/24/13
INTALL FLS/GATES & CONSTANT WARNING AT COUNTY ROAD M.P. 261.73
Rec#: 19537 WO#: 11994
IS: 8/7/13 AJA
MJD/XRL/CTC/JTB

MODIFICATION LEVEL	
Q. A. LAST LEVEL CHECKED	DU
LAST LEVEL MOD THIS TYPICAL	DU
LAST LEVEL BY DESIGNER	DU
CHANGED FROM TYPICAL?	Y
REV 01.24.11 4K 2TKGF.3	

CIRCUIT MODIFICATIONS ARE NOT TO BE MADE WITHOUT AUTHORITY FROM THE OFFICE OF SIGNAL DESIGN

Date: 12/22/11
Des: CTC
Chk: AJA
AFE: 11994

UNION PACIFIC RAILROAD
WORDEN, ILLINOIS
REMOTE LOCATION
PANA SUBDIVISION
Office of Sr AVP Engineering - Signal/TCO Omaha, Nebraska

Sh.: 3
DOT 000000R
MP: 261.11
ID: 030226111.3X

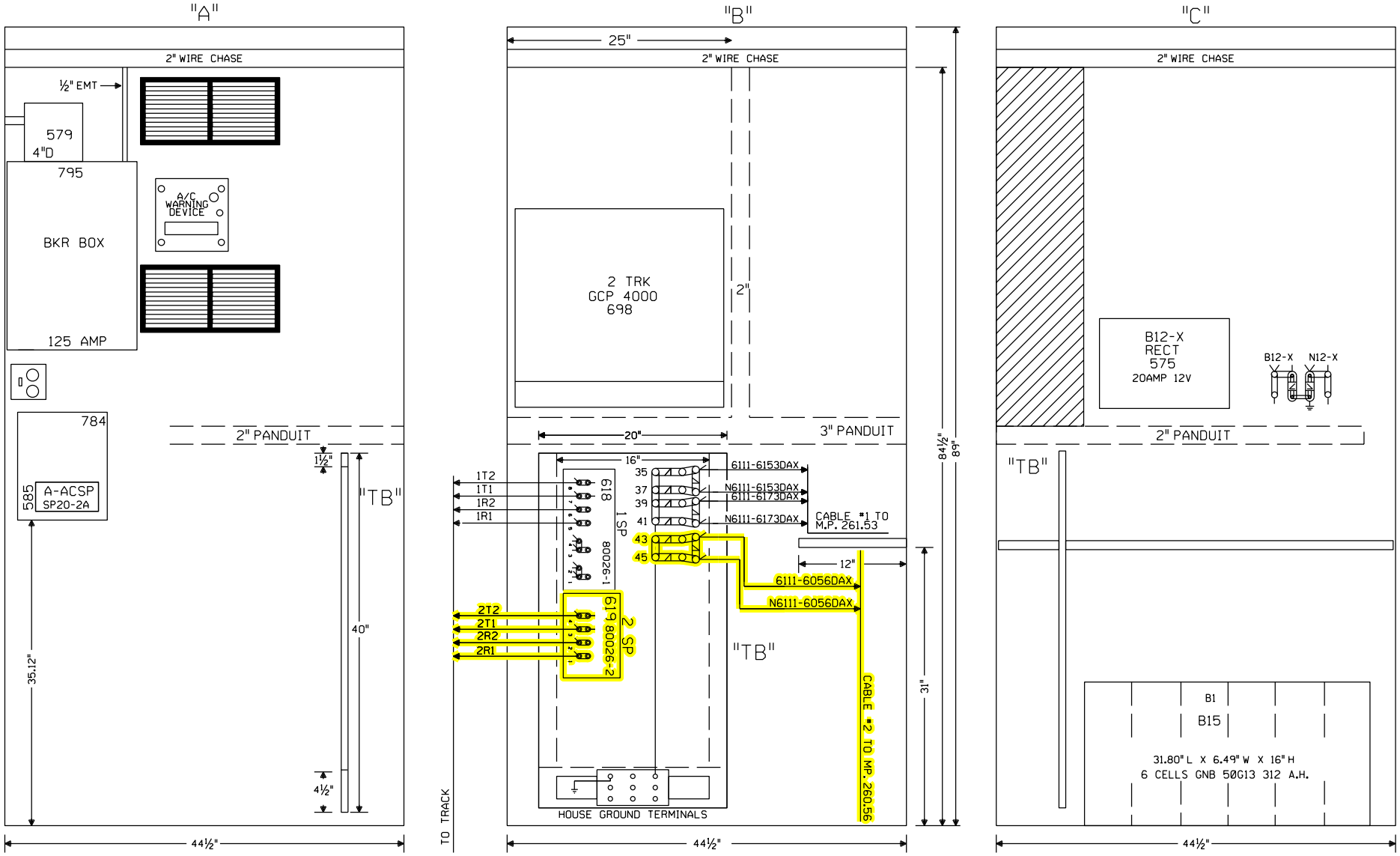

NOTE: ALL DIMENSIONS SHOWN ARE APPROXIMATE.

WO 25081 = IN

Designed: 07/01/14

INSTALL FLASHERS, GATES, AND CWT AT M.P. 260.56 GREEN HEDGE ROAD

PID: 87034 WO#: 25081 IS: / Rec#: / CAM/JTB

Revised: 9/24/13

INTALL FLS/GATES & CONSTANT WARNING AT COUNTY ROAD M.P. 261.73

Rec#: 19537 WO#: 11994 IS: 8/7/13 /AJA MJD/XRL/CTC/JTB

MODIFICATION LEVEL	
Q.A. LAST LEVEL CHECKED	DU
LAST LEVEL MOD THIS TYPICAL	DU
LAST LEVEL BY DESIGNER	DU
CHANGED FROM TYPICAL?	Y

Rev 01.24.11 4K REMOTE.5

CIRCUIT MODIFICATIONS ARE NOT TO BE MADE WITHOUT AUTHORITY FROM THE OFFICE OF SIGNAL DESIGN

Date: 12/22/11
Des: CTC
Chk: AJA
AFE: 11994

UNION PACIFIC RAILROAD

WORDEN, ILLINOIS
REMOTE LOCATION
PANA SUBDIVISION

Office of Sr AVP Engineering - Signal/TCO Omaha, Nebraska

Sh.: 4
DOT 000000R
MP: 261.11
ID: 030226111.4X