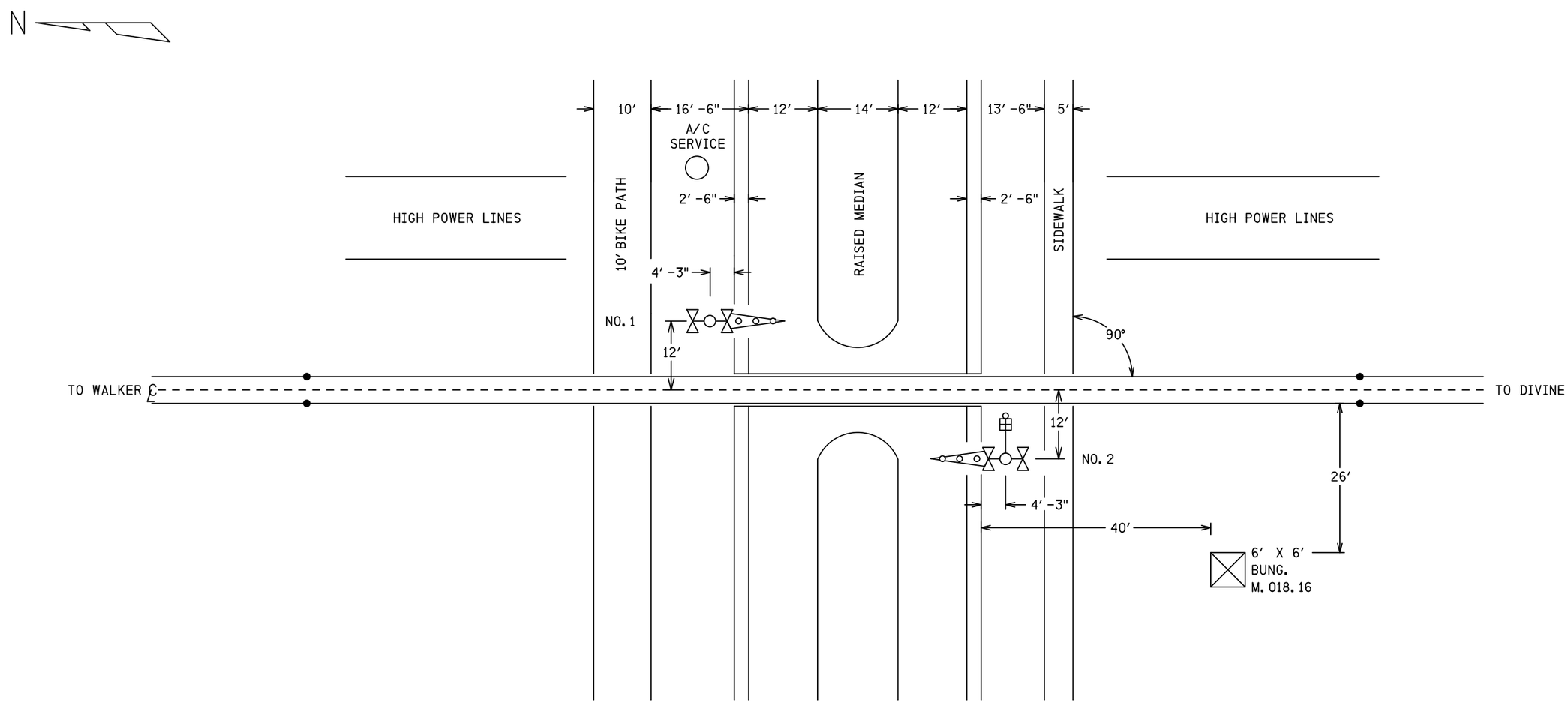

NOTES

1) 25 MPH DESIGN SPEED
2) 35 FEET MAXIMUM CLEARANCE DISTANCE
3) 185 FEET ISLAND DISTANCE
4) CONSTANT WARNING CONTROL
5) APPROACH CIRCUIT DISTANCE PROVIDES FOR:
   0 SEC CLEARANCE TIME
   0 SEC PREEMPTION TIME (0 SEC ADVANCE TIME)
   20 SEC MINIMUM WARNING TIME
   4 SEC GATE DESCENT DELAY
   10 SEC BUFFER TIME
   5 SEC EQUIPMENT REACTION TIME
6) 26 FEET NO.1 GATE ARM LENGTH
   26 FEET NO.2 GATE ARM LENGTH

SII 22 APR 2014

PROPOSED
DESIGN NO. 10-0376
RED-IN YELLOW-OUT

AS INSTALLED
DATE _____
BY _____
(PRINT NAME)

PROPOSED D	M	Y	REVISIONS	D	C	COMPLETED D	M	Y	C

REGION SOUTHERN
SUB. ILLINOIS RIVER 335

SIGNALS AND COMMUNICATIONS HOMEWOOD
22 APRIL 2014
DES. NAD
CH. BJW

SITUATION SKETCH
SCALE 1" = 20′
SHOREWOOD, IL
BEITH RD

IRL-018.16-0

DOT# 261 012N

16

SIEMENS INDUSTRY INC
LOUISVILLE DIVISION, LOUISVILLE, KY

IrI-018.16-0.dgn
29-JAN-2015

REVISIONS			
NO.	DATE	BY	DESCRIPTION	APP. BY
1				
2				
3				
4				
5				

FLASHING LIGHT UNITS ALIGNMENT TABLE

PRIMARY FRONT LIGHTS FOR VEHICLES							
SIG #	LIGHT #	ROUNDEL		ROAD SPEED	MINIMUM DISTANCE	RECOMMENDED DISTANCE	ALIGNMENT DISTANCE
		SIZE	TYPE	MPH	FT	FT	FT
1	1,2	12"	LED	50	540	850	
2	7,8	12"	LED	50	540	850	
BACK LIGHTS FOR VEHICLES							
SIG #	LIGHT #	ROUNDEL		ROAD SPEED	MINIMUM DISTANCE	RECOMMENDED DISTANCE	ALIGNMENT DISTANCE
		SIZE	TYPE	MPH	FT	FT	FT
1	3,4	12"	LED	N/A	N/A	N/A	50
2	5,6	12"	LED	N/A	N/A	N/A	50

NOTE
FIELD IS TO PROVIDE THE ACTUAL ALIGNMENT DISTANCE AS DETERMINED BY
SCP-706: ROAD CROSSING DEVICE LIGHT UNIT ALIGNMENT PROCEDURES

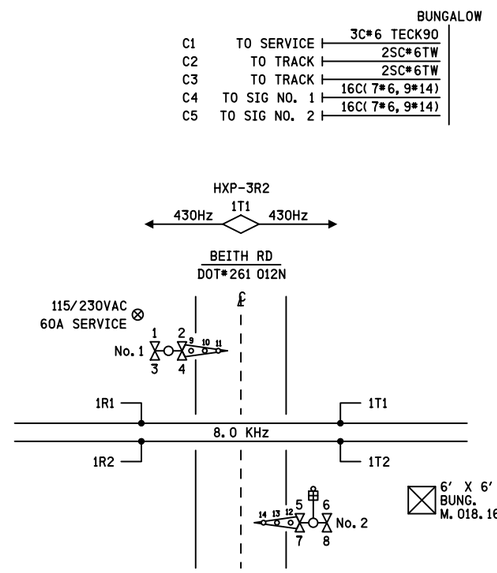

CONTENT	SHEET NO.
SITUATION SKETCH	0
TRACK LAYOUT & INDEX	01
HXP-3R2 WIRING DIAGRAM	02
HXP-3R2 PROGRAM CONFIGURATION	03
SAFETRAN EVENT ANALYZER RECORDER II (SEAR II)	04
SEARII PROGRAM DATA	05
CRTU CIRCUITS	06
SSCCIV WITH ISOLATED GATE CROSSING CONTROLLER 40 AMP	07
SSCCIV PROGRAM DATA	08
GATE 1&2 MECH. CONTROL CIRCUITS SAFETRAN S-60	09
DC DISTRIBUTION	10
AC DISTRIBUTION	11
BUNGALOW LAYOUT TOP VIEW	12
BUNGALOW LAYOUT SIDE D & L.I.G.P. INSIDE	13
ENTRANCE BOARD L.I.G.P. OUTSIDE	14
BUNGALOW LAYOUT SIDES A, B & C	15

ilr-018.16-01.dgn
29-JAN-2015

SIEMENS INDUSTRY INC

DES.: NAD	DATE: 22/04/14	JOB NO.: PWCA10394	
CKD.: MRB	ISSUE DATE: N/A	EST. NO.: XP-7318	
DRN.: NAD	PLAN NO.: N/A	SHEET 1 OF 15	
P TIME: 11:18	P DATE: 29-JAN-2015	CAD ID.: ILR-018.16-01	

SII 22 APR 2014

PROPOSED
DESIGN NO. 10-0376
RED-IN YELLOW-OUT

AS INSTALLED
DATE _____
BY _____
(PRINT NAME)

PROPOSED D	M	Y	REVISIONS	D	C	COMPLETED D	M	Y	C

REGION SOUTHERN
SUB. ILLINOIS RIVER 335

SIGNALS AND COMMUNICATIONS HOMEWOOD
22 APRIL 2014
DES. NAD
CH. BJW

TRACK LAYOUT & INDEX

SHOREWOOD, IL
BEITH RD

ILR-018.16-01

DOT# 261 012N

SIEMENS INDUSTRY INC
LOUISVILLE DIVISION, LOUISVILLE, KY

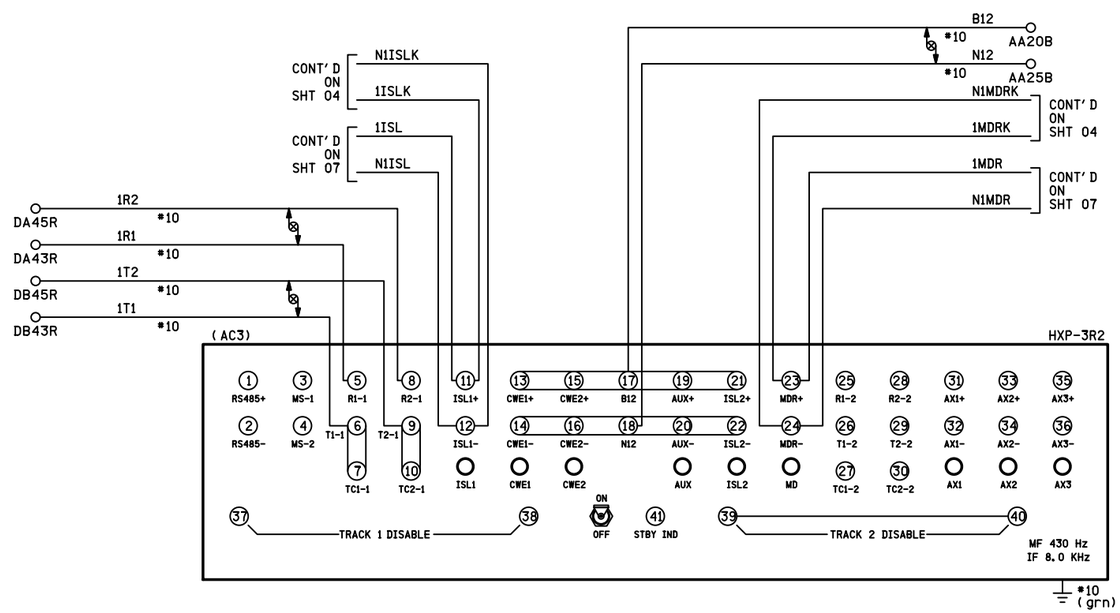

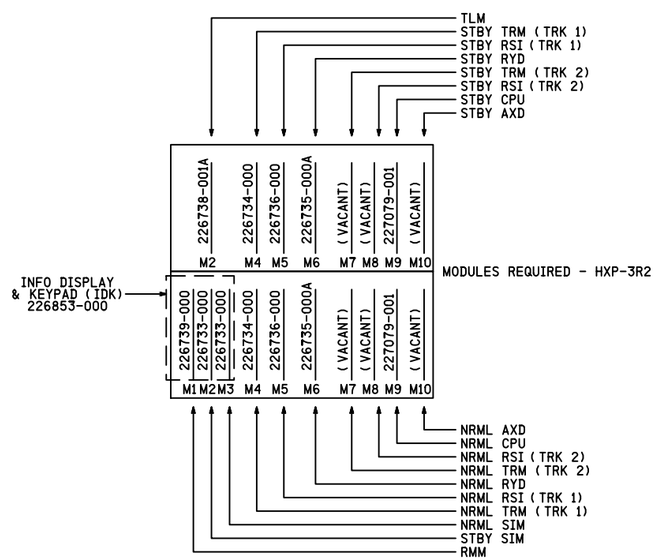

NOTES

1) ALL WIRING #16 AWG UNLESS OTHERWISE NOTED

DENOTES TWISTED PAIR

SII 22 APR 2014

PROPOSED
DESIGN NO. 10-0376
RED-IN YELLOW-OUT

AS INSTALLED
DATE _____
BY _____
(PRINT NAME)

PROPOSED D	M	Y	REVISIONS	D	C	COMPLETED D	M	Y	C

REGION SOUTHERN
SUB. ILLINOIS RIVER 335

SIGNALS AND COMMUNICATIONS HOMEWOOD
22 APRIL 2014
DES. NAD
CH. BJW

HXP-3R2
WIRING DIAGRAM
SHOREWOOD, IL
BEITH RD

ILR-018.16-02

DOT# 261 012N

SIEMENS INDUSTRY INC
LOUISVILLE DIVISION, LOUISVILLE, KY

SIEMENS INDUSTRY INC

DES.: NAD	DATE: 22/04/14	JOB NO.: PWCA10394	
CKD.: MRB	ISSUE DATE: N/A	EST. NO.: XP-7318	
DRN.: NAD	PLAN NO.: N/A	SHEET 2 OF 15	
P. TIME: 11:18	P. DATE: 29-JAN-2015	CAD ID.: ILR-018.16-02	

NO.	DATE	BY	DESCRIPTION	APP. BY
1				
2				
3				
4				
5				

REVISIONS

ILR-018.16-02.dgn
29-JAN-2015

REVISIONS			
NO.	DATE	BY	DESCRIPTION	APP. BY
1				
2				
3				
4				
5				

UNIT #1 — Grade Crossing Location Record

Cabinet Number (Option 90) _____

Location BEITH RD Milepost 018.16 DOT 261 012N Date 22 / 04 / 14

Operating Program HPN _____ Version _____

System Monitor Program HPN _____ Version _____

Hardware Settings

Track 1 Master [X] Slave [ ] 4 kHz [ ] 8 kHz [X]

LOS Jumper 0 [ ] 1 [X] 2 [ ] Fault Jumper 0 [X] 1 [ ]

Approach configuration switch position: Normal [X] Short [ ] Very Short [ ]

Track 2 Master [ ] Slave [ ] 4 kHz [ ] 8 kHz [ ]

LOS Jumper 0 [ ] 1 [ ] 2 [ ] Fault Jumper 0 [ ] 1 [ ]

Approach configuration switch position: Normal [ ] Short [ ] Very Short [ ]

TLM MODULE SETTINGS

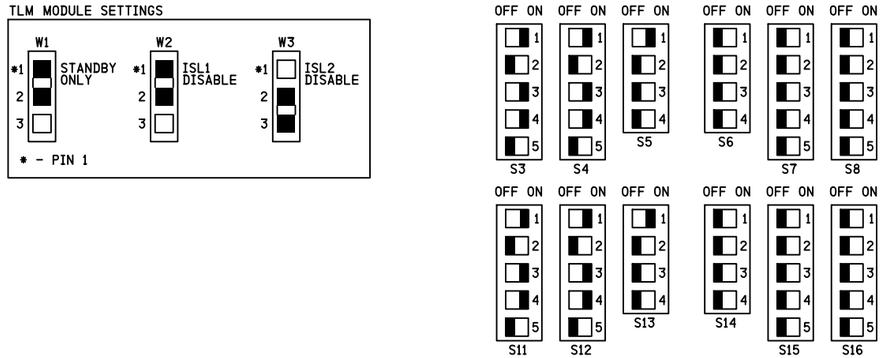

Adjust Select Adjustments

No.	Adjustment	Default	Range	Track 1	Track 2
1	Approach Length	9,999	0 - 9,999	1290 feet	feet
2	Warning Time	99	23 - 99	30 seconds	seconds
3	LIA	0	-9 to +9	steps	steps
4	TC (1 step = 32)	395	430 - 470	steps	steps
5	MD Restart	99%	0 - 99%	RX	RX

Option Adjustments

No.	Adjustment	Default	Range	Track 1	Track 2
0	RX	0	1-100		
1	TK-ENA	UP	UP or dn	UP [X] dn [ ]	UP [ ] dn [ ]
2	TK FO	0	0 - 9999	430 Hz	Hz
3	CW/MD	d	C to d	C [X] d [ ]	C [ ] d [ ]
4	UNI-BI	b	U - b	U [ ] b [X]	U [ ] b [ ]
5	NBS-C	0	0 - 99	99 RX	RX
		9,999	RX dependant	XXXX feet	XXXX feet
6	CWEWT	80	0 - 99	80 seconds	seconds
7	LOS	16	4 - 99	30 seconds	seconds
8	IJ-LOS	5	3 - 99	5 seconds	seconds
9	BC	frequency dependant	50 -250	XXX	XXX
10	P-COMP	0	0 - 10	XX degrees	XX degrees

HXP-3, HXP-3R, HXP-3R2

AX Adjustment Options

	Default	Range	Option 11 - AX1	Option 12 - AX2	Option 13 - AX3
TK-ASN		1, 2, Both	1 [ ] 2 [ ] Both [ ]	1 [ ] 2 [ ] Both [ ]	1 [ ] 2 [ ] Both [ ]
OF-TK1	0	0 - 9,999	N/A feet	N/A feet	N/A feet
OF-TK2	0	0 - 9,999	N/A feet	N/A feet	N/A feet
WT	99	23 - 99	N/A seconds	N/A seconds	N/A seconds
MD-RST	99	0 - 99%	N/A RX	N/A RX	N/A RX
CW/MD	d	C or d	C [ ] d [ ]	C [ ] d [ ]	C [ ] d [ ]
CJ-LOS	0	3 - 99	N/A seconds	N/A seconds	N/A seconds
PJ-DET	15	4 - 15	N/A seconds	N/A seconds	N/A seconds
POS-ST	dn	UP or dn	UP [ ] dn [ ]	UP [ ] dn [ ]	UP [ ] dn [ ]

No.	Adjustment	Default	Range	Track 1	Track 2
17	MDR-AX	n*	n or A	n [X] A [ ]	n [ ] A [ ]
	OF-TK1	0	0 - 9,999	N/A feet	
	OF-TK2	0	0 - 9,999		N/A feet
	CJ-LOS	0	3 - 99	N/A seconds	N/A seconds
	PJ-DET	15	4 - 15	N/A seconds	N/A seconds
18	MD-TMR	10	10-99 (0=disable)	N/A minutes	N/A minutes
19	MIN-WT	0	23-99 (0=disable)	N/A seconds	N/A seconds
20	FS-DET	0	10-30 (0=disable)	N/A minutes	N/A minutes
21	POS-RX	0	0 - 74 (0=disable)	N/A RX	N/A RX
	POS-TM	0	0 - 99**	N/A minutes	N/A minutes
22	AR-TMR	0	0-80 (0=disable)	N/A minutes	N/A minutes
47	ATO-RX	dn	UP or dn	UP [ ] dn [ ]	UP [ ] dn [ ]
48	PF-ENA	UP	UP or dn	UP [ ] dn [ ]	UP [ ] dn [ ]

***n = not an AX drive (no options available)**
****0 = disable, 99 = continuous**

Shunt Record

West Approach		No Shunt RX	No Shunt Phase	100% Shunt RX	100% Shunt Phase	50% Shunt	50% Shunt RX	50% Shunt Phase	LIA Added %/M 1 to 9
Track 1	Normal	--	--	--	--	--	--	--	--
	Standby	--	--	--	--	--	--	--	--
Track 2	Normal	--	--	--	--	--	--	--	--
	Standby	--	--	--	--	--	--	--	--
East Approach									
Track 1	Normal	XX	XX	XX	XX	--	XX	XX	XX
	Standby	XX	XX	--	--	--	--	--	--
Track 2	Normal	--	--	--	--	--	--	--	--
	Standby	--	--	--	--	--	--	--	--

SII 22 APR 2014

PROPOSED
DESIGN NO. 10-0376
RED-IN YELLOW-OUT

AS INSTALLED
DATE _____
BY _____
(PRINT NAME)

PROPOSED D	M	Y	REVISIONS	D	C	COMPLETED D	M	Y	C

REGION SOUTHERN
SUB. ILLINOIS RIVER 335

SIGNALS AND COMMUNICATIONS HOMEWOOD
22 APRIL 2014
DES. NAD
CH. BJW

HXP-3R2
PROGRAM CONFIGURATION
SHOREWOOD, IL
BEITH RD

ILR-018.16-03

DOT# 261 012N

SIEMENS INDUSTRY INC
DES.: NAD DATE: 22/04/14 JOB NO.: PWCA10394
CKD.: MRB ISSUE DATE: N/A EST. NO.: XP-7318
DRN.: NAD PLAN NO.: N/A SHEET 3 OF 15
P TIME: 11:18 P DATE: 29-JAN-2015 CAD ID.: ILR-018.16-03

SIEMENS INDUSTRY INC
LOUISVILLE DIVISION, LOUISVILLE, KY

ilr-018.16-03.dgn
29-JAN-2015

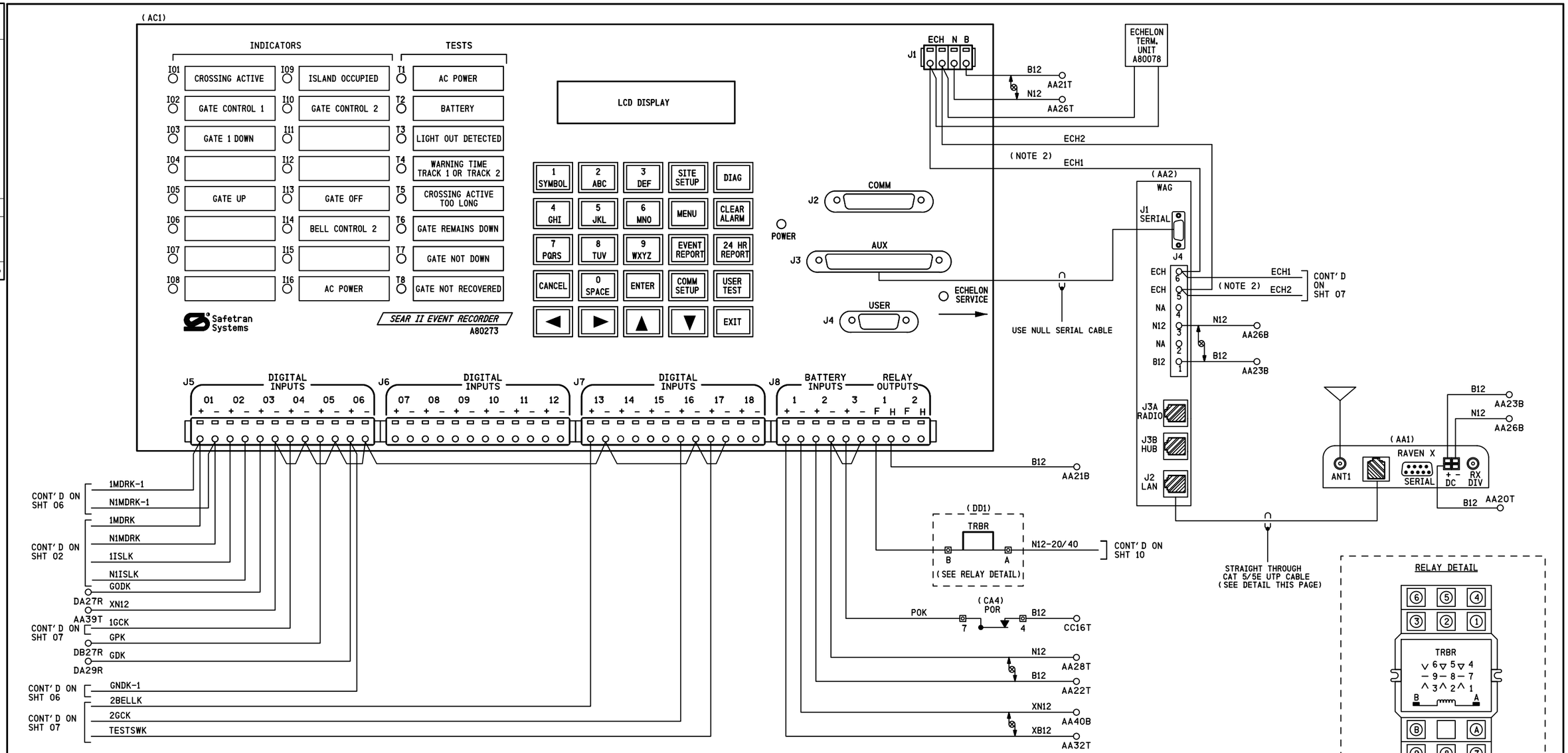

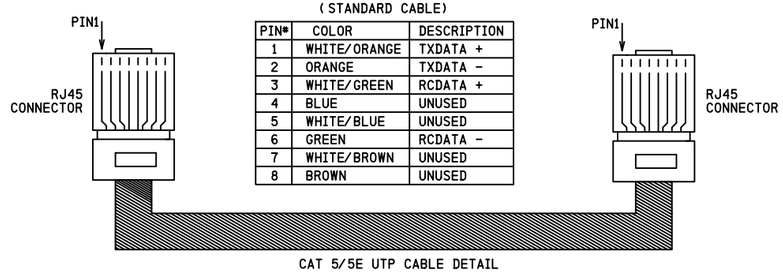

EIA/TIA 568B WIRING STANDARD
(STANDARD CABLE)

PIN#	COLOR	DESCRIPTION
1	WHITE/ORANGE	TXDATA +
2	ORANGE	TXDATA -
3	WHITE/GREEN	RCDATA +
4	BLUE	UNUSED
5	WHITE/BLUE	UNUSED
6	GREEN	RCDATA -
7	WHITE/BROWN	UNUSED
8	BROWN	UNUSED

CAT 5/5E UTP CABLE DETAIL

NOTES

1) ALL WIRING #16 AWG UNLESS OTHERWISE NOTED
2) USE BELDEN CABLE, PART # 8461-u500-60 FOR ALL ECHELON AND LAN WIRING

⊗ DENOTES TWISTED PAIR

SII 22 APR 2014

PROPOSED
DESIGN NO. 10-0376
RED-IN YELLOW-OUT

AS INSTALLED
DATE _____
BY _____
(PRINT NAME)

REVISIONS	PROPOSED D	PROPOSED M	PROPOSED Y	D	C	COMPLETED D	COMPLETED M	COMPLETED Y	C

REGION SOUTHERN
SUB. ILLINOIS RIVER 335
SIGNALS AND COMMUNICATIONS HOMEWOOD
22 APRIL 2014
DES. NAD
CH. BJW
SAFETRAN EVENT ANALYZER RECORDER II (SEAR II)
SHOREWOOD, IL
BEITH RD
ILR-018.16-04

DOT# 261 012N

REVISIONS NO.	DATE	BY	DESCRIPTION	APP. BY
1				
2				
3				
4				
5				

SIEMENS INDUSTRY INC

DES. : NAD	DATE: 22/04/14	JOB NO.: PWCA10394	
CKD. : MRB	ISSUE DATE: N/A	EST. NO.: XP-7318	
DRN. : NAD	PLAN NO.: N/A	SHEET 4 OF 15	
P TIME: 11:18	P DATE: 29-JAN-2015	CAD ID.: ILR-018.16-04	

SIEMENS INDUSTRY INC
LOUISVILLE DIVISION, LOUISVILLE, KY

Ilr-018.16-04.dgn
29-JAN-2015

REVISIONS				
NO.	DATE	BY	DESCRIPTION	APP. BY
1				
2				
3				
4				
5				

MENU ITEMS

RESET NAMES/MODULES	NO	
AC OFF ALARM TIME (minutes)	60	MIN.
MINIMUM NORMAL WARNING TIME (seconds)	20	SEC.
DESIRED WARNING TIME (seconds)	30	SEC.
IGNORE WARNING TIMES BELOW (seconds)	3	SEC.
PRERING/STNSTOP TIME (minutes)	10	MIN.
SWITCH MOVE TIMER (minutes)	30	MIN.
HOW MANY GATES?	1	
GATE 1 DOWN	☐ NOT ENERGIZED	■ ENERGIZED
GATE 2 DOWN	☐ NOT ENERGIZED	☐ ENERGIZED
GATE 3 DOWN	☐ NOT ENERGIZED	☐ ENERGIZED
GATE 4 DOWN	☐ NOT ENERGIZED	☐ ENERGIZED
HOW MANY SETS OF GCPS?	0	
(IF 1 SET IS SELECTED) DOES GCP HAVE STANDBY?	N/A	
(IF 2 SETS ARE SELECTED) DOES 2ND GCP HAVE STANDBY?	N/A	
HOW MANY ILODS?	2	
(IF 1 OR MORE IS SELECTED) MINIMUM FLASH RATE	55	
HOW MANY SSCCIII UNITS?	1	
1SSCC TESTSWINPUT?	1	SEC.
GATE NOT DOWN ALARM TIME	15	SEC.
CROSSING ACTIVE ALARM AFTER (minutes)	20	MIN.
FLASHING TROUBLE LIGHT OUTPUT? (NOTE 5)	NO	
DIGITAL INPUTS NAMES	DEFAULT	
(XB14) XB12 LOW VOLTAGE ALARMS (IN TENTHS)	111	
(MB12)B12 LOW VOLTAGE ALARMS (IN TENTHS)	111	
(MB12)B12-1 LOW VOLTAGE ALARMS (IN TENTHS)	111	
(IF DIGITAL INPUT NAMES IS "USER DEFINED") (SB12) B14 LOW VOLTAGE ALARMS (IN TENTHS)	111	
ALLOW DTMF CONTROL (NOTE 8)	NO	
(IF DTMF CONTROL IS SELECTED) DIGIT #1	N/A	
DIGIT #2	N/A	
DIGIT #3	N/A	
DIGIT #4	N/A	
DIGIT #5	N/A	
VHFC CHANNEL (1 to 8)	N/A	
DTMF TIME-OUT (30 TO 240 SEC.)	180	SEC.
DTMF OUTPUT 2 DELAY (NOTE 6)	N/A	

CURRENT SOFTWARE REVISION:
EXECUTIVE: 9V645-A01AH.bin APPLICATION: CN028B5.CDL

BATTERY INPUT CONFIGURATION

INPUT	USAGE	LABEL	NORMAL RANGE	
1	LIGHT BATTERY	XB12/XN12	MINIMUM LEVEL - 18 VDC	
2	STANDBY BATTERY	B12/N12	MINIMUM LEVEL - 18 VDC	
3	STANDBY BATTERY	B12-1/N12-1	MINIMUM LEVEL - 18 VDC	
3	POR	AC/POR	POWER ON > 0.5 VDC	(WHEN REQUIRED)

RELAY OUTPUT CONFIGURATION

OUTPUT	USAGE	LABEL	CONTACT CLOSED	CONTACT OPEN	TOGGLE	
1	TROUBLE LIGHT	TRBLE LITE	OFF	ON	FLASH	(NOTE 5)
2	DTMF OUTPUT 1	DTMFOUT1	ACTIVE	INACTIVE	N/U	
3	DTMF OUTPUT 2	DTMFOUT2	ACTIVE	INACTIVE	N/U	(NOTE 6)

DIGITAL INPUT CONFIGURATION

DIGITAL INPUT	USAGE	LABEL	NORMAL LOGIC STATE
1	MD/GCP 1	MD/GCP1K /NMD/GCP1K (NOTE 2)	1
2	ISLAND 1	ISL1K/NISL1K (NOTE 2)	1
3	GOD	GODK (NOTE 2)	1
4	GATE CONTROL 1	1GCK (NOTE 2)	1
5	GATE UP	GPK (NOTE 2)	1
6	GATE DOWN 1	1GDK (NOTE 3)	0 OR 1 (NOTE 1)
7	GATE DOWN 2	2GDK (NOTE 3)	0 OR 1 (NOTE 1)
8	BELL/LIGHTS 1	1BELLK (NOTE 2)	0
9	MD/GCP 2	MD/GCP2K /NMD/GCP2K (NOTE 2)	1
10	ISLAND 2	ISL2K/NISL2K (NOTE 2)	1
11	WRAP 1 (FR)	1WAK (NOTE 2) (FK)	1
12	WRAP 2 (XAPER)	2WAK (NOTE 2) (XAPEK)	1
13	BELL/LIGHTS 2	2BELLK (NOTE 2)	0
14	GATE DOWN 3	3GDK (NOTE 3)	0 OR 1 (NOTE 1)
15	GATE DOWN 4	4GDK (NOTE 3)	0 OR 1 (NOTE 1)
16	GATE CONTROL 2	2GCK (NOTE 2)	1
17	TEST SWITCH	TESTSWK (NOTE 2)	1
18	DAX1	DAX1 (NOTE 2)	0

LED CONFIGURATION (NOTE 4)

LED	LABEL	OFF=	ON=
01	CROSSING ACTIVE	MD/GCP1K & MD/GCP2K & XK & ISL1K & ISL2K ALL UP	MD/GCP1K OR MD/GCP2K OR XK OR ISL1K OR ISL2K DOWN
02	GATE CONTROL 1	1GCK UP	1GCK DOWN
03	GATE 1 DOWN	1GDK OFF (GATE 1 NOT DOWN)	1GDK ON (GATE 1 DOWN)
04	GATE 2 DOWN	2GDK OFF (GATE 2 NOT DOWN)	2GDK ON (GATE 2 DOWN)
05	GATE(S) UP	GPK ON (GATES UP)	GPK OFF (GATES NOT UP)
06	BELL CONTROL 1	1BELLK OFF	1BELLK ON
07	WRAP 1 (FR)	1WAK UP (FK UP)	1WAK DOWN (FK DOWN)
08	DAX	DAX1-4 ALL UP	DAX1, 2, 3 OR 4 DOWN
09	ISLAND OCCUPIED	ISLAND 1 OR 2 NOT OCCUPIED	ISLAND 1 & ISLAND 2 OCCUPIED
10	GATE CONTROL 2	2GCK UP	2GCK DOWN
11	GATE 3 DOWN	3GDK OFF (GATE 3 NOT DOWN)	3GDK ON (GATE 3 DOWN)
12	GATE 4 DOWN	4GDK OFF (GATE 4 NOT DOWN)	4GDK ON (GATE 4 DOWN)
13	GATE OFF	GOD ON	GOD OFF
14	BELL CONTROL 2	2BELLK OFF	2BELLK ON
15	WRAP 2 (XAPER)	2WAK UP (XAPEK UP)	2WAK DOWN (XAPEK DOWN)
16	CONTROLLER FAIL	CONTROLLER OK	CONTROLLER FAIL

NOTES
1) DEPENDING ON DESIGN OF THE CIRCUIT.
2) THESE INPUTS ARE AUTOMATICALLY DETECTED.
3) GDK1, 2, 3 & 4 INPUT TAGS WILL BE ASSIGNED BY EXISTING MENU QUESTIONS. IF NOT ASSIGNED, THESE INPUTS WILL BE OPEN FOR USE BY OTHER TAGS, WHICH CAN BE ASSIGNED FROM THE DIGITAL CONFIGURATION MENU ON THE SEARII.
4) LED's 01-16 ALL OFF IN NORMAL LOGIC STATE (NO TRAIN). ALL LED'S WILL BE OFF, UNLESS THE CIRCUIT REPRESENTED IS IN THE ACTIVE STATE. (I.e. IF 1GCK IS LOW, GATES WILL DROP, LED2 WILL BE ON, THEN WHEN 1GDK, 2GDK ARE IN THE DOWN STATE, LED's 3 &4 WILL BE LIT.)
5) IF THE ANSWER IS NO, THE TROUBLE LIGHT OUTPUT IS EITHER ON (NORMAL STATE) OR OFF (ALARM STATE). IF THE ANSWER IS YES, THE TROUBLE LIGHT OUTPUT IS EITHER ON (NORMAL STATE) OR FLASHING (ALARM STATE).
6) DTMF2 OUTPUT CAN BE ASSIGNED TO A RELAY OUTPUT ON AN EXTERNAL I/O MODULE, CONNECTED VIA ECHELON TO THE SEARII.

ALARM CONDITIONS (NOTE 7)

ALARM (TEST) LEDS (GREEN LED = NO ALARM)

AC POWER (T1) (WHEN BATTERY INPUT #3 USED)
- RED FLASHING - AC CURRENTLY OFF, MORE THAN THE USER SELECTED TIME.
- RED STEADY - AC WAS OFF MORE THAN USER TIME SELECTED, BUT HAS SINCE BEEN RESTORED.
- YELLOW FLASHING - AC CURRENTLY OFF, FOR LESS THAN THE USER SELECTED TIME.
- YELLOW STEADY - AC WAS OFF LESS THAN USER TIME SELECTED, BUT HAS SINCE BEEN RESTORED.

BATTERY (T2)
- RED FLASHING - ONE OF THE BATTERY BANKS IS IN ALARM FOR MORE THAN 5 SECONDS.
- RED STEADY - ONE OF THE BATTERY BANKS IS IN ALARM FOR MORE THAN 5 SECONDS BUT HAS SINCE BEEN RESTORED.
- YELLOW FLASHING - ONE OF THE BATTERY BANKS IS IN ALARM FOR LESS THAN 5 SECONDS.
- YELLOW STEADY - ONE OF THE BATTERY BANKS IS IN ALARM FOR LESS THAN 5 SECONDS BUT HAS SINCE BEEN RESTORED.

LOD (T3)
- RED FLASHING - ONE OR MORE BULBS WAS OUT DURING A TRAIN MOVE, OR ONE OR MORE ILOD's ARE OFFLINE.
- RED STEADY - ONE OF THE ABOVE CONDITIONS HAD OCCURRED, BUT HAS SINCE RECOVERED.
- YELLOW STEADY - THE FLASH RATE WAS IN ALARM, BUT HAS SINCE CLEARED.
- YELLOW FLASHING - THE FLASH RATE WAS NOT NORMAL FOR LAST TRAIN MOVE.

WARN TIME (T4)
- RED FLASHING - LAST TRAIN MOVE HAD A WARNING TIME LESS THAN MIN WARN TIME ENTERED DURING SITE SETUP, DEFAULT IS 20 SECONDS.
- RED STEADY - WARNING TIME ALARM HAD BEEN SET, BUT LAST TRAIN MOVE HAD A NORMAL WARNING TIME.
- YELLOW FLASHING - LAST TRAIN HAD A WARNING TIME LESS THAN DESIRED WARN TIME BUT MORE THAN MIN WARN TIME.
- YELLOW STEADY - WARNING TIME MONITOR HAD BEEN SET, BUT LAST TRAIN MOVE HAD A NORMAL WARNING TIME.

CROSSING ACTIVE TOO LONG (T5)
- RED FLASHING - CROSSING IS ACTIVE AND HAS BEEN FOR MORE THAN THE USER SETTING, DEFAULT IS 20 MINUTES.
- RED STEADY - CROSSING WAS ACTIVE FOR MORE THAN THE USER SETTING, DEFAULT IS 20 MINUTES, AND HAS SINCE RECOVERED.

GATE REMAINS DOWN (T6)
- RED FLASHING - GCK IS UP, BUT ONE OF THE GATES HAS BEEN DOWN FOR 20+ MINUTES.
- RED STEADY - ALARM WAS TRIGGERED, BUT THE GATE(S) HAVE SINCE RECOVERED.

GATE NOT DOWN (T7)
- RED FLASHING - ONE OR MORE GATES, TOOK LONGER THAN THE USER DEFINED SETTING TO LOWER AFTER GCK WENT DOWN.
- RED STEADY - ALARM WAS TRIGGERED, BUT THE LAST GATE MOVE WAS OK.

GATE NOT RECOVERD (T8)
- RED FLASHING - GATE OFF HAS BEEN DETECTED.
- YELLOW FLASHING - ONE OR MORE GATES, TOOK LONGER THAN 20 SECONDS TO RAISE AFTER GCK WENT UP.
- YELLOW STEADY - ALARM WAS TRIGGERED, BUT GATES HAS SINCE RECOVERED TO PICK GPK.

SSCC FAIL (I16)
- RED STEADY - MAINTK INPUT IS LOW.
- OFF - SSCC OK.

(NOTES CONT'D)

7) ALL LED'S GREEN UPON START OF THE APPLICATION PROGRAM. ALL ALARM LED's CAN BE RESET TO THEIR CURRENT STATE BY PRESSING THE "CLEAR ALARM" KEY. IF AN ALARM CONDITION IS STILL VALID, THE LED WIL CONTINUE TO FLASH. ALL STEADY-COLORED LED's WILL BE RESET TO GREEN STEADY. ANY LED's NOT LIT ARE DEFECTIVE OR A PROBLEM EXISTS WITH THE APPLICATION PROGRAM.

8) ASSIGNED DTMF CODES:

ACTIVATE CROSSING (TRACK 1)	XXXXX11#
DE-ACTIVATE CROSSING (TRACK 1)	XXXXX10#
ACTIVATE CROSSING (TRACK 2)	XXXXX21#
DE-ACTIVATE CROSSING (TRACK 2)	XXXXX20#
ACTIVATE CROSSING (MAINTENANCE)	XXXXX31#
DE-ACTIVATE CROSSING (MAINTENANCE)	XXXXX30#

SII 22 APR 2014

PROPOSED
DESIGN NO. 10-0376
RED-IN YELLOW-OUT

AS INSTALLED
DATE
BY
(PRINT NAME)

PROPOSED D	M	Y	REVISIONS	D	C	COMPLETED D	M	Y	C

REGION SOUTHERN
SUB. ILLINOIS RIVER 335

SIGNALS AND COMMUNICATIONS HOMEWOOD
22 APRIL 2014
DES. NAD
CH. BJW

SEARII
PROGRAM DATA
SHOREWOOD, IL
BEITH RD

ILR-018.16-05

DOT# 261 012N

SIEMENS INDUSTRY INC
DES.: NAD | DATE: 22/04/14 | JOB NO.: PWCA10394
CKD.: MRB | ISSUE DATE: N/A | EST. NO.: XP-7318
DRN.: NAD | PLAN NO.: N/A | SHEET 5 OF 15
P. TIME: 11:18 | P. DATE: 29-JAN-2015 | CAD ID.: ILR-018.16-05

SIEMENS INDUSTRY INC
LOUISVILLE DIVISION, LOUISVILLE, KY

ILr-018.16-05.dgn
29-JAN-2015

REVISIONS				
NO.	DATE	BY	DESCRIPTION	APP. BY
1				
2				
3				
4				
5				

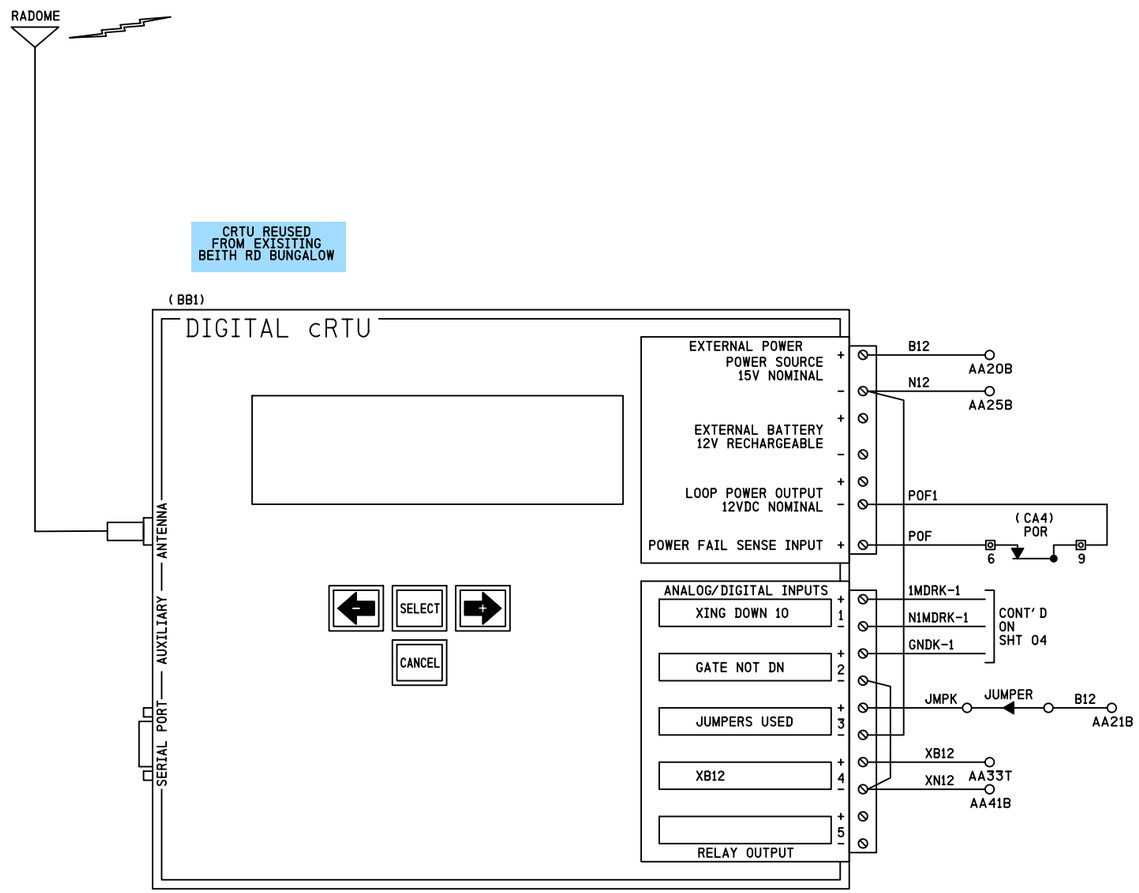

CONFIGKEY:	30
MODEL:	CO6C/2ANA V2.3
SERIAL #:	
SITE IDENTIFIER:	DOT# 261 012N

* FIELD TO PROVIDE SERIAL *

	LOW ALARM	RETURN	HIGH ALARM	RETURN
B12	11.6	12.6	15.6	14.6
XB12	13.8	14.8	17.8	16.8

NOTE

1) ALL WIRING #16 AWG UNLESS OTHERWISE NOTED.

SII 22 APR 2014

PROPOSED
DESIGN NO. 10-0376
RED-IN YELLOW-OUT

AS INSTALLED
DATE _____
BY _____
(PRINT NAME)

PROPOSED			REVISIONS	D	C	COMPLETED			C
D	M	Y				D	M	Y	

REGION SOUTHERN
SUB. ILLINOIS RIVER 335

SIGNALS AND COMMUNICATIONS HOMEWOOD
22 APRIL 2014
DES. NAD
CH. BJW

CRTU CIRCUITS

SHOREWOOD, IL
BEITH RD

ILR-018.16-06

DOT# 261 012N

SIEMENS INDUSTRY INC

DES.: NAD	DATE: 22/04/14	JOB NO.: PWCA10394	
CKD.: MRB	ISSUE DATE: N/A	EST. NO.: XP-7318	
DRN.: NAD	PLAN NO.: N/A	SHEET 6 OF 15	
P TIME: 11:18	P DATE: 29-JAN-2015	CAD ID.: ILR-018.16-06	

SIEMENS INDUSTRY INC
LOUISVILLE DIVISION, LOUISVILLE, KY

Ilr-018.16-06.dgn
29-JAN-2015

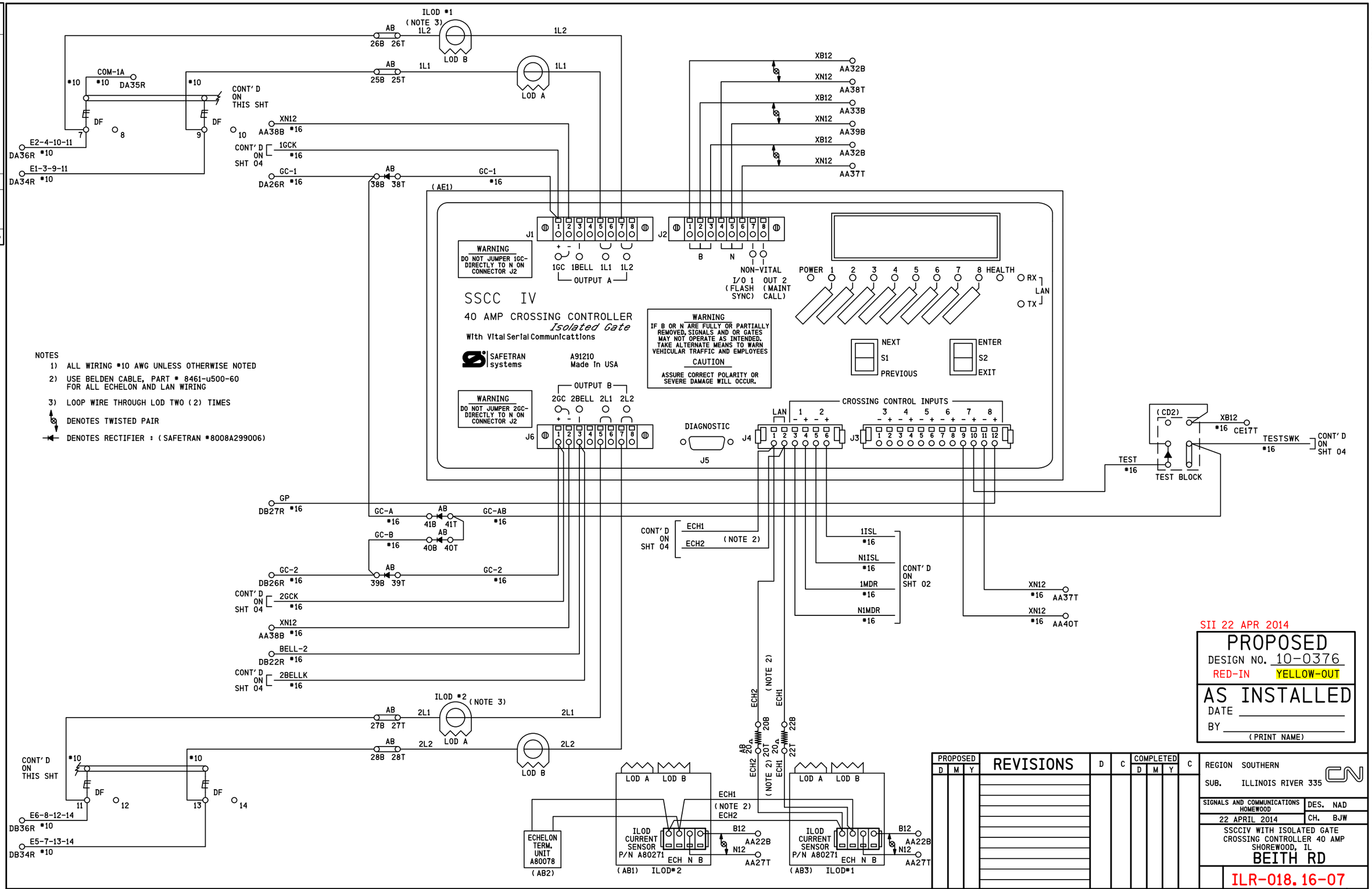

NOTES

1) ALL WIRING #10 AWG UNLESS OTHERWISE NOTED
2) USE BELDEN CABLE, PART # 8461-u500-60 FOR ALL ECHELON AND LAN WIRING
3) LOOP WIRE THROUGH LOD TWO (2) TIMES

DENOTES TWISTED PAIR

DENOTES RECTIFIER : (SAFETRAN #8008A299006)

REVISIONS				
NO.	DATE	BY	DESCRIPTION	APP. BY
1				
2				
3				
4				
5				

SIEMENS INDUSTRY INC			
DES. : NAD	DATE: 22/04/14	JOB NO.: PWCA10394	
CKD. : MRB	ISSUE DATE: N/A	EST. NO.: XP-7318	
DRN. : NAD	PLAN NO.: N/A	SHEET 7 OF 15	
P TIME: 11:18	P DATE: 29-JAN-2015	CAD ID.: ILR-018.16-07	

PROPOSED			REVISIONS	D	C	COMPLETED			C
D	M	Y				D	M	Y	

REGION SOUTHERN
SUB. ILLINOIS RIVER 335

SIGNALS AND COMMUNICATIONS HOMEWOOD
22 APRIL 2014
DES. NAD
CH. BJW

SSCCIV WITH ISOLATED GATE CROSSING CONTROLLER 40 AMP
SHOREWOOD, IL
BEITH RD

ILR-018.16-07

DOT# 261 012N

SIEMENS INDUSTRY INC
LOUISVILLE DIVISION, LOUISVILLE, KY

Ilr-018.16-07.dgn
29-JAN-2015

CROSSING CONTROLLER SSCCIV 40-AMPERE UNIT, A91210

SOFTWARE VERSION: 9V546-A01.R

PROGRAM	NOTES	INITIAL SETTING BY: _____ DATE: __/__/____
FLASH RATE:	30-70 FLASHES/MINUTE DEFAULT = 50	55 FLASHES/MINUTE
GATES USED:	YES/NO DEFAULT = YES	■ YES ☐ NO
1 GC DELAY:	3-20 SEC. DEFAULT = 4	4 SECONDS
2 GC DELAY (40 AMP UNIT):	3-20 SEC. DEFAULT = 4	4 SECONDS
GATE RISING BELL:	ON/OFF DEFAULT = ON	☐ ON ■ OFF
ENABLED INPUTS:	1 THRU 7 ONLY	■ 1 ■ 2 ☐ 3 ☐ 4 ☐ 5 ☐ 6 ■ 7
GC2/I7:	GC2 NORMAL, I7 = NORMAL GC2 INVERTED, I7 = NORMAL GC2 PRMT RELAY, I7 = PRMT HEALTH GC2 BEACONFDBK	■ NORMAL ☐ INVERTED ☐ PRE-EMPT SIM ☐ PRE-EMPT ADV ☐ BEACON
INPUT 7	INPUT, PRMT HLTH, TEST SW	☐ IN ☐ HEALTH ■ TEST SW
TEST SW 2TRKDSTK ONLY	ACTIVATE, ACT & STICK RELEASE	☐ ACTIVATE ☐ ACT & REL
ADV PRE-EMPT TIME (40A):	1-99 SEC. DEFAULT = 1	N/A SECONDS
MIN ACTIVATION TIME:	0-99 SEC. DEFAULT = 20	20 SECONDS
STICK RELEASE TIME:	5-120 MIN. DEFAULT = 15	N/A MINUTES
BEACON PICK-UP DELAY	5-600 SEC. DEFAULT = 20	N/A SECONDS
SUP ISLAND TIME:	5-20 MIN. DEFAULT = 20	N/A MINUTES
ENABLED OUTPUTS: (40 amp only)	DEFAULT = A + B	■ A + B ☐ A ☐ B
DAYLIGHT SAVINGS:	DEFAULT = DISABLED	■ ENABLED ☐ DISABLED
DATE:	N/A	☐ DATE SET
TIME:	24-FORMAT	☐ TIME SET
PASSWORD:	DEFAULT = DISABLED	☐ ENABLED ■ DISABLED

CONFIGURE		
LOS TIMERS:	0-20 SEC. DEFAULT = 0 INPUTS 1-7 ONLY	1: ____ SEC 5: ____ SEC 2: ____ SEC 6: ____ SEC 3: ____ SEC 7: ____ SEC 4: ____ SEC
MCF:		MCF: BASICPLS CRC: 09658133
ATCS ADDRESS:	DEFAULT = 700000000000	_____
LOW BATTERY:	9.0-15.0 VOLTS, OR DISABLED DEFAULT = DISABLED	■ DISABLED ☐ ENABLED ___.___ VOLTS
AUX I/O:	DEFAULT = NONVITAL OUTPUT	■ NV OUTPUT ☐ FLASH SYNC IN ☐ FLASH SYNC OUT
DETECT LAMP NEUTRAL WIRE	DEFAULT = YES	☐ YES ■ NO

TEST CONFIGURE		
LAMP TEST CANCEL TIMER:	1-15 MIN. DEFAULT = 5	5 MINUTES
LAMP TEST DELAY TIMER:	30-120 SEC. DEFAULT = 30	30 SECONDS
LAMP TEST ON TIMER:	15-60 SEC. DEFAULT = 15	15 SECONDS

STANDARD SETUP LAMP VOLTAGES PROCEDURE
USING TRUE RMS AC+DC METER, OR CONVERSION TABLE BELOW

SETUP LAMP VOLTAGES	INITIAL SETTING BY: _____ DATE: __/__/____ METER: FLUKE 87
FAR SIGNAL (SIG.#1)	1 L1 = ___.___ VOLTS 1 L2 = ___.___ VOLTS 2 L1 = ___.___ VOLTS 2 L2 = ___.___ VOLTS
SSCCIV	1 L1 = ___.___ VOLTS 1 L2 = ___.___ VOLTS 2 L1 = ___.___ VOLTS 2 L2 = ___.___ VOLTS
NEAR SIGNAL (SIG.#2)	1 L1 = ___.___ VOLTS 1 L2 = ___.___ VOLTS 2 L1 = ___.___ VOLTS 2 L2 = ___.___ VOLTS

MULTIMETER READING VARIANCE FROM ACTUAL LAMP VOLTAGE

BATTERY BANK VOLTAGE	VALID LAMP OUTPUT RANGE (In volts)	DIGITAL METER (FLUKE 87 OR EQUIVALENT)	ANALOG METER (SIMPSON 260 OR TS111)
13.3	9.0 TO 12.0	1.3 VOLTS BELOW ACTUAL VALUE	0.6 VOLTS BELOW ACTUAL VALUE
14.7	9.0 TO 12.0	2.2 VOLTS BELOW ACTUAL VALUE	1.1 VOLTS BELOW ACTUAL VALUE
15.8	9.0 TO 12.0	2.6 VOLTS BELOW ACTUAL VALUE	2.0 VOLTS BELOW ACTUAL VALUE

FOR LAMP OUTPUT SETTINGS GREATER THAN 12.0 VOLTS, REDUCE THE LISTED VALUES BY 30%
LAMP VOLTAGE MEASUREMENTS SHOULD BE ACCURATE TO 0.3 VOLTS.

SII 22 APR 2014

PROPOSED
DESIGN NO. 10-0376
RED-IN YELLOW-OUT

AS INSTALLED
DATE _____
BY _____
(PRINT NAME)

PROPOSED D	M	Y	REVISIONS	D	C	COMPLETED D	M	Y	C

REGION SOUTHERN
SUB. ILLINOIS RIVER 335

SIGNALS AND COMMUNICATIONS HOMEWOOD
22 APRIL 2014
DES. NAD
CH. BJW

SSCCIV
PROGRAM DATA
SHOREWOOD, IL
BEITH RD

ILR-018.16-08

DOT# 261 012N

REVISIONS NO.	DATE	BY	DESCRIPTION	APP. BY
1				
2				
3				
4				
5				

SIEMENS INDUSTRY INC
DES.: NAD DATE: 22/04/14 JOB NO.: PWCA10394
CKD.: MRB ISSUE DATE: N/A EST. NO.: XP-7318
DRN.: NAD PLAN NO.: N/A SHEET 8 OF 15
P. TIME: 11:19 P. DATE: 29-JAN-2015 CAD ID.: ILR-018.16-08

ilr-018.16-08.dgn
29-JAN-2015

SIEMENS INDUSTRY INC
LOUISVILLE DIVISION, LOUISVILLE, KY

CONTACT	CLOSED AT	FUNCTION
6	70° -90°	POWER DOWN CONTROL
7	0° -89°	POWER UP CONTROL
8	83° -90°	FLASHING LGT. CONTROL
9	5° -90°	BELL CONTROL
10	0° -5°	GATE DOWN INDICATION
11	N/A	SPARE
12	N/A	SPARE

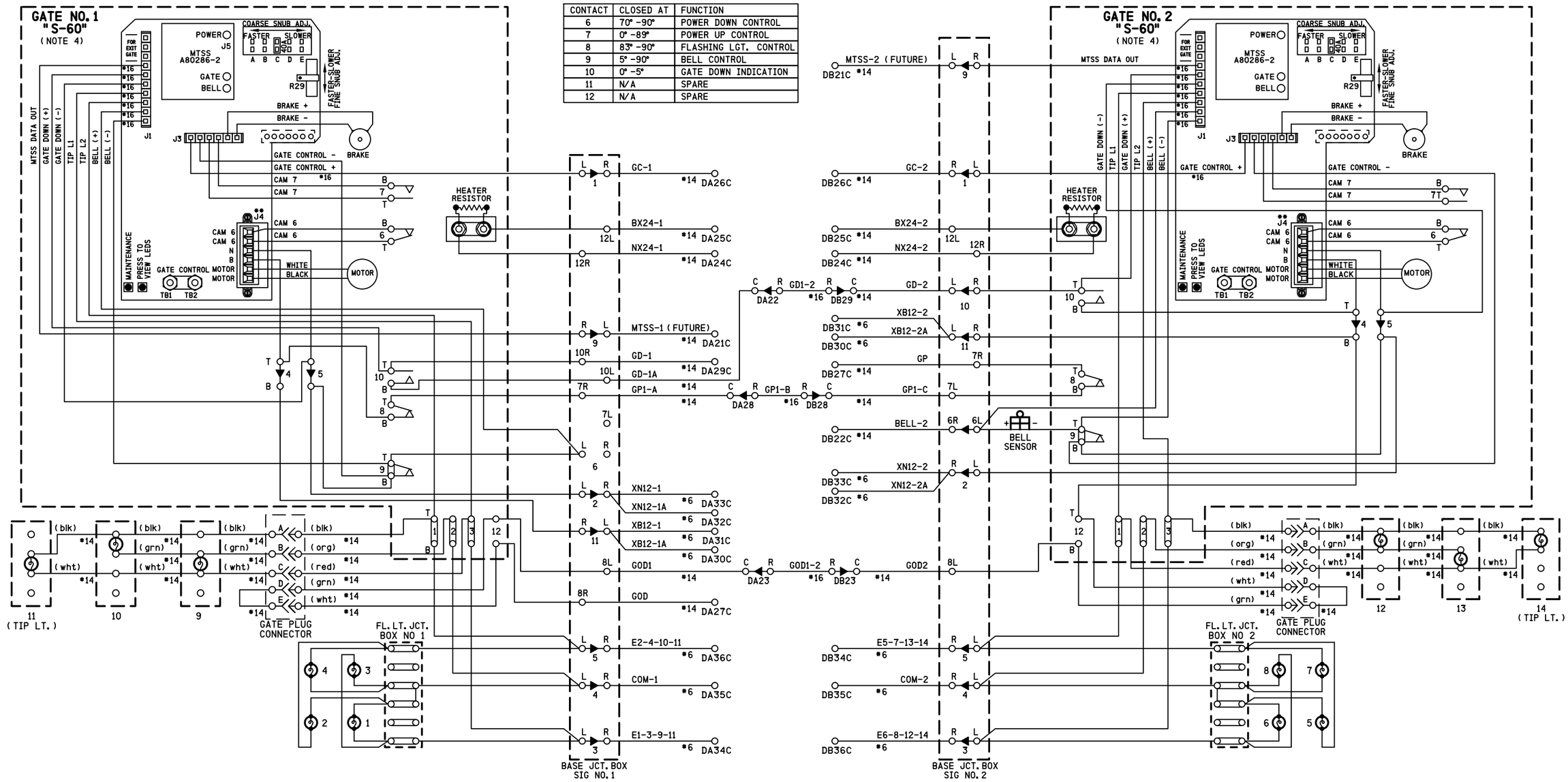

NOTES

1) ON GATE No. 1 ADD JUMPER BETWEEN TERMINALS:
   ADD JUMPER BETWEEN TERMINAL 5B & 9B
2) ON GATE No. 2 ADD JUMPER BETWEEN TERMINALS:
   ADD JUMPER BETWEEN TERMINAL 4T & 10B,
   ADD JUMPER BETWEEN TERMINAL 5B & 9B,
   ADD JUMPER BETWEEN TERMINAL 4B & 12T
3) ALL WIRING #10 AWG UNLESS OTHERWISE NOTED
4) GATE DESCENT TIME (RELEASE FROM VERTICAL TO FULLY HORIZONTAL) TO BE WITHIN 11 SECONDS
5) BELL CUT-OUT (5°-90°) WHEN REQUIRED
   REMOVE STRAP BETWEEN 9B AND 9T
6) ENSURE ALL TERMINALS HAVE TWO SHOULDER NUTS

SII 22 APR 2014

PROPOSED
DESIGN NO. 10-0376
RED-IN YELLOW-OUT

AS INSTALLED
DATE _____
BY _____
(PRINT NAME)

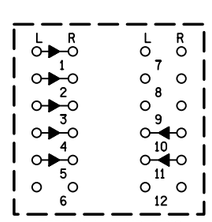

TERMINAL NUMBERING
BASE JCT. BOX 1

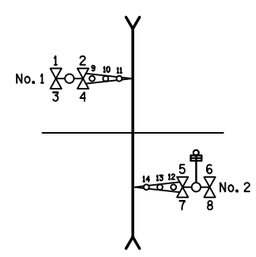

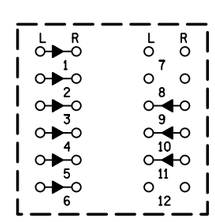

TERMINAL NUMBERING
BASE JCT. BOX 2

PROPOSED D	M	Y	REVISIONS	D	C	COMPLETED D	M	Y	C

REGION SOUTHERN
SUB. ILLINOIS RIVER 335

SIGNALS AND COMMUNICATIONS HOMEWOOD
22 APRIL 2014
DES. NAD
CH. BJW

GATE 1 & 2 MECH. CONTROL CIRCUITS
SAFETRAN S-60
SHOREWOOD, IL
BEITH RD

ILR-018.16-09

DOT# 261 012N

SIEMENS INDUSTRY INC
LOUISVILLE DIVISION, LOUISVILLE, KY

SIEMENS INDUSTRY INC
DES.: NAD | DATE: 22/04/14 | JOB NO.: PWCA10394
CKD.: MRB | ISSUE DATE: N/A | EST. NO.: XP-7318
DRN.: NAD | PLAN NO.: N/A | SHEET 9 OF 15
P TIME: 11:19 | P DATE: 29-JAN-2015 | CAD ID.: ILR-018.16-09

REVISIONS
NO. | DATE | BY | DESCRIPTION | APP. BY
1
2
3
4
5

ilr-018.16-09.dgn
29-JAN-2015

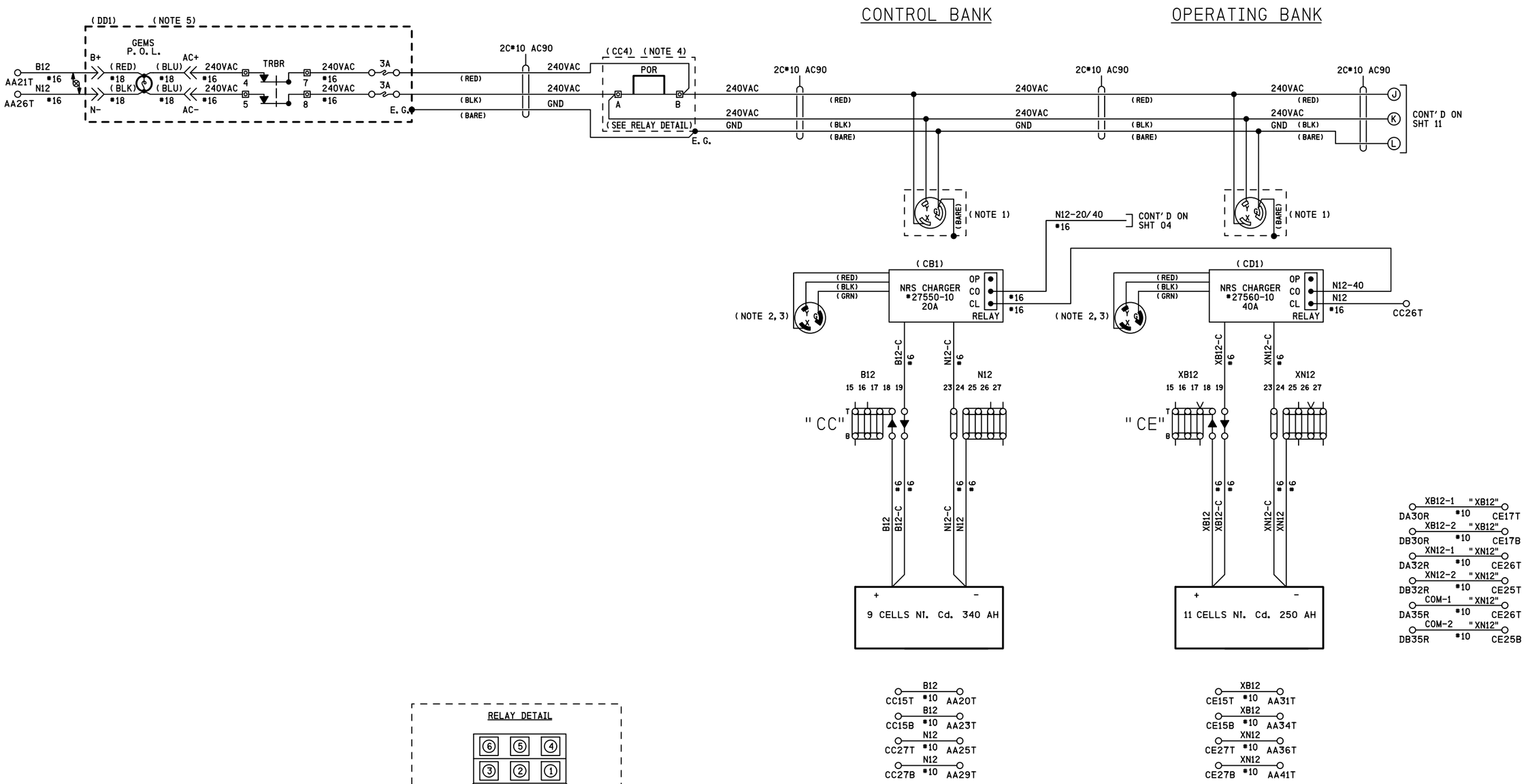

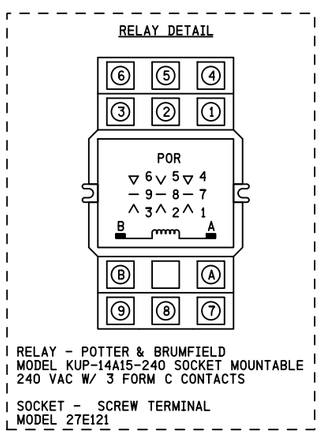

NOTES

1) 30A 250V TWIST LOCK RECEPTACLE HUBBELL HBL 2620
2) PLUG HUBBELL HBL 2621 REFER TO PS-902 PAGE 6
3) GROUND LUG LOCATED ON CHARGER HOUSING
4) PART OF POWER CONTROL AND INDICATION RELAY JUNCTION BOX
5) PART OF POWER OFF INDICATOR LIGHT REPEATER RELAY JUNCTION BOX (REFER TO PS-907 SHT 2A)

<< DENOTES WAGO TERMINAL

DENOTES TWISTED PAIR

SII 22 APR 2014

PROPOSED
DESIGN NO. 10-0376
RED-IN YELLOW-OUT

AS INSTALLED
DATE _____
BY _____
(PRINT NAME)

PROPOSED D	M	Y	REVISIONS	D	C	COMPLETED D	M	Y	C

REGION SOUTHERN
SUB. ILLINOIS RIVER 335

SIGNALS AND COMMUNICATIONS HOMEWOOD — DES. NAD
22 APRIL 2014 — CH. BJW

DC DISTRIBUTION
SHOREWOOD, IL
BEITH RD

ILR-018.16-10

DOT# 261 012N

SIEMENS INDUSTRY INC
LOUISVILLE DIVISION, LOUISVILLE, KY

REVISIONS				
NO.	DATE	BY	DESCRIPTION	APP. BY
1				
2				
3				
4				
5				

SIEMENS INDUSTRY INC

DES.: NAD	DATE: 22/04/14	JOB NO.: FWCA10394	
CKD.: MRB	ISSUE DATE: N/A	EST. NO.: XP-7318	
DRN.: NAD	PLAN NO.: N/A	SHEET 10 OF 15	
P TIME: 11:19	P DATE: 29-JAN-2015	CAD ID.: ILR-018.16-10	

ilr-018.16-10.dgn
29-JAN-2015

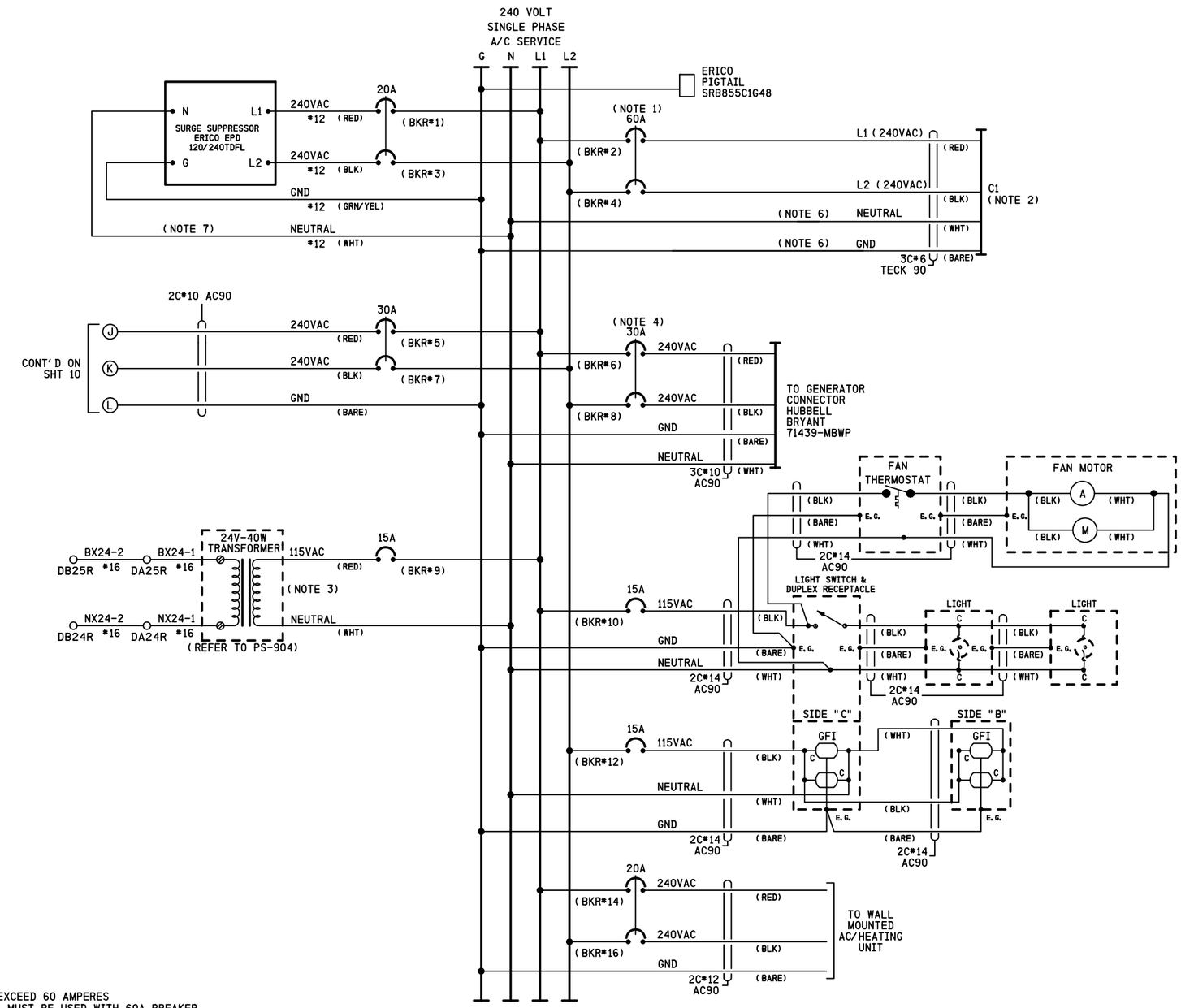

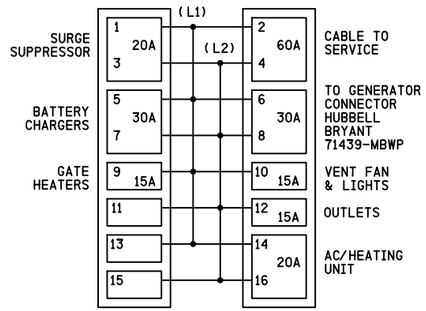

BREAKER POSITIONS

NOTES

1) CIRCUIT BREAKER NOT TO EXCEED 60 AMPERES RETAINING KIT PK4DTIM4LA MUST BE USED WITH 60A BREAKER
2) FEEDER CIRCUIT BREAKER, AT STUB POLE SERVICE PANEL, NOT TO EXCEED 60 AMPERES
3) 24 VOLT - 40 WATT TRANSFORMER (CN STOCK *02-45-367)
4) A SWITCH TRANSFER KIT MUST BE INSTALLED BETWEEN THE SERVICE DISCONNECT BREAKER AND THE GENERATOR HOOK UP
5) WHERE SEPARATE GROUND WIRE EXISTS BETWEEN THE SERVICE AND THE LOAD CENTER, REMOVE THE BRASS COLORED BONDING SCREW (REFER TO SCHEMATIC ON BOX COVER FOR EXACT LOCATION)
6) S.C.*6 STRANDED, CSA TYPE R90 (X-LINK)
7) KEEP LEADS AS SHORT AS POSSIBLE

SII 22 APR 2014

PROPOSED
DESIGN NO. 10-0376
RED-IN YELLOW-OUT

AS INSTALLED
DATE _____
BY _____
(PRINT NAME)

PROPOSED D	M	Y	REVISIONS	D	C	COMPLETED D	M	Y	C

REGION SOUTHERN
SUB. ILLINOIS RIVER 335

SIGNALS AND COMMUNICATIONS HOMEWOOD
22 APRIL 2014
DES. NAD
CH. BJW

AC DISTRIBUTION
SHOREWOOD, IL
BEITH RD

ILR-018.16-11

DOT# 261 012N

REVISIONS				
NO.	DATE	BY	DESCRIPTION	APP. BY
1				
2				
3				
4				
5				

SIEMENS INDUSTRY INC

DES.: NAD	DATE: 22/04/14	JOB NO.: FWCA10394	
CKD.: MRB	ISSUE DATE: N/A	EST. NO.: XP-7318	
DRN.: NAD	PLAN NO.: N/A	SHEET 11 OF 15	
P TIME: 11:19	P DATE: 29-JAN-2015	CAD ID.: ILR-018.16-11	

SIEMENS INDUSTRY INC
LOUISVILLE DIVISION, LOUISVILLE, KY

ilr-018.16-11.dgn
29-JAN-2015

REVISIONS				
NO.	DATE	BY	DESCRIPTION	APP. BY
1				
2				
3				
4				
5				

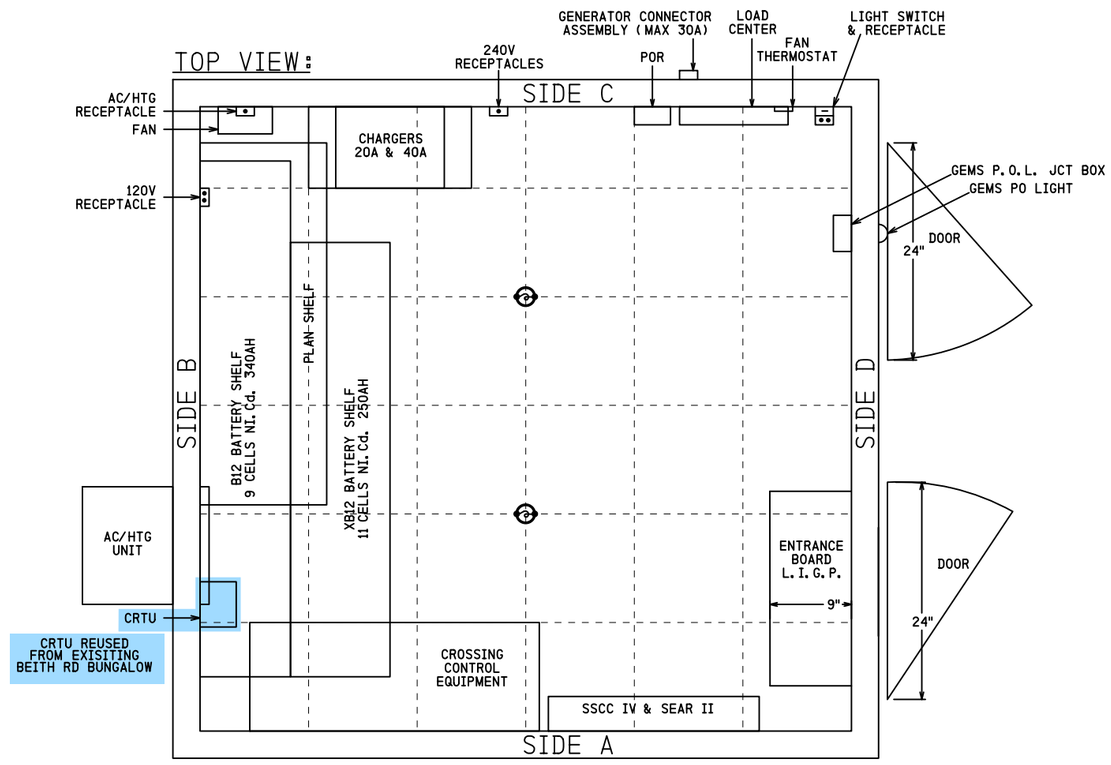

SII 22 APR 2014

PROPOSED
DESIGN NO. 10-0376
RED-IN YELLOW-OUT

AS INSTALLED
DATE _____
BY _____
(PRINT NAME)

PROPOSED			REVISIONS	D	C	COMPLETED			C
D	M	Y				D	M	Y	

REGION SOUTHERN
SUB. ILLINOIS RIVER 335

SIGNALS AND COMMUNICATIONS HOMEWOOD
22 APRIL 2014
DES. NAD
CH. BJW

BUNGALOW LAYOUT TOP VIEW

SHOREWOOD, IL
BEITH RD

ILR-018.16-12

DOT# 261 012N

SIEMENS INDUSTRY INC			
DES.: NAD	DATE: 22/04/14	JOB NO.: PWCA10394	
CKD.: MRB	ISSUE DATE: N/A	EST. NO.: XP-7318	
DRN.: NAD	PLAN NO.: N/A	SHEET 12 OF 15	
P TIME: 11:19	P DATE: 29-JAN-2015	CAD ID.: ILR-018.16-12	

SIEMENS INDUSTRY INC
LOUISVILLE DIVISION, LOUISVILLE, KY

llr-018.16-12.dgn
29-JAN-2015

REVISIONS				
NO.	DATE	BY	DESCRIPTION	APP. BY
1				
2				
3				
4				
5				

ENTRANCE BOARD L.I.G.P.

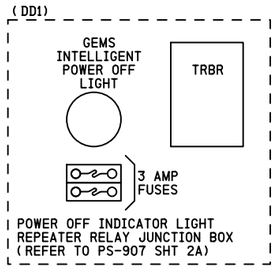

SIDE VIEW: SIDE D

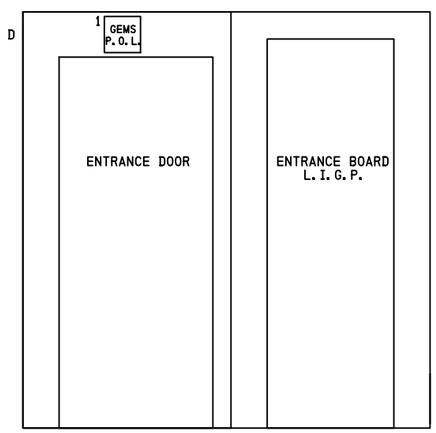

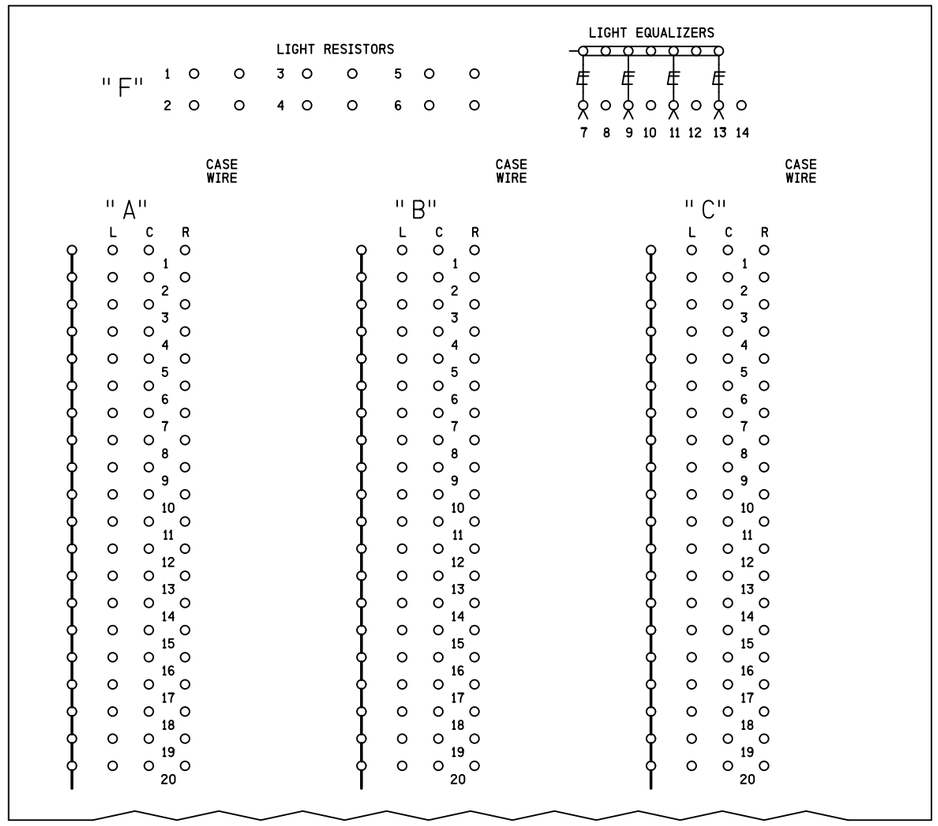

INSIDE

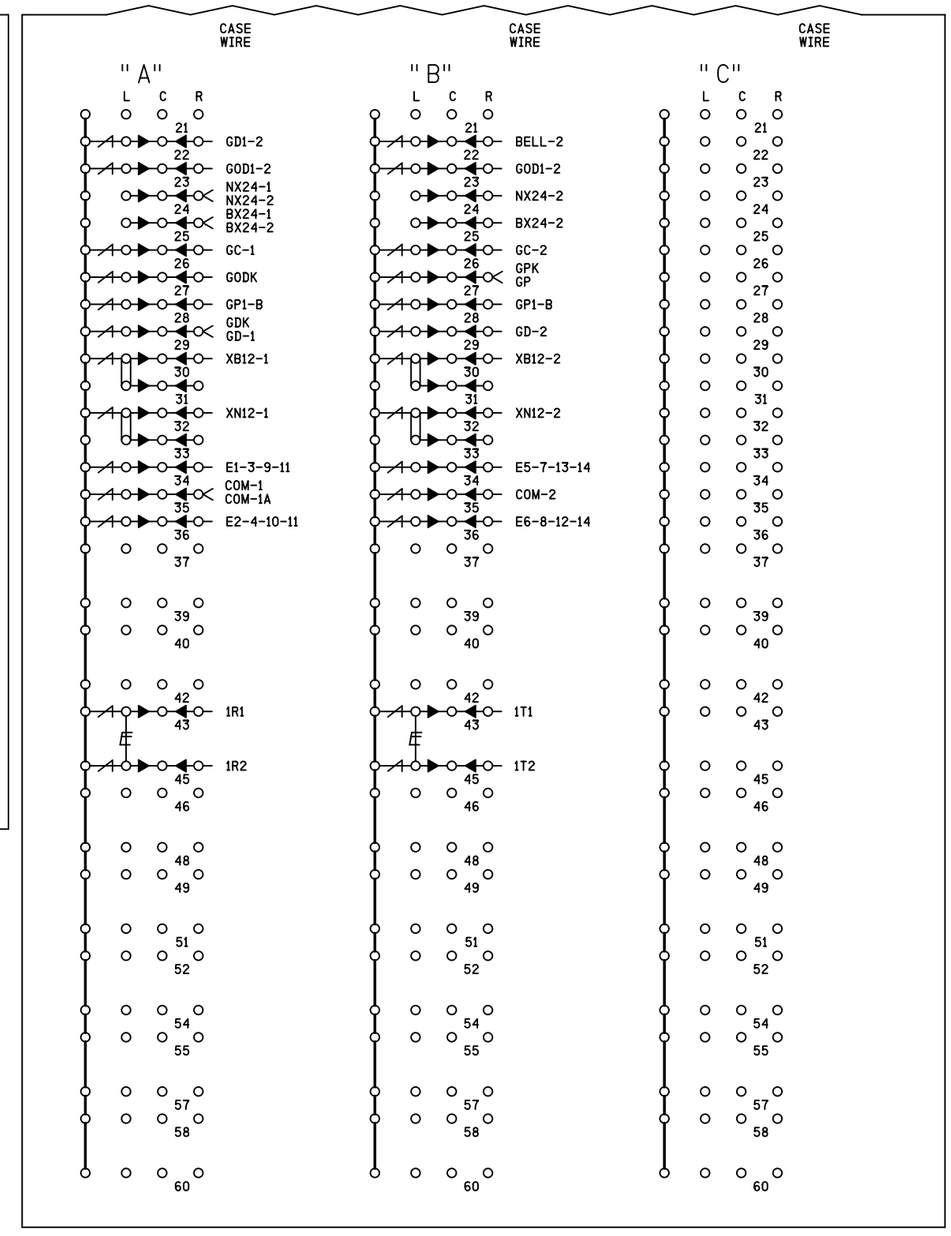

NOTES

- DENOTES HD EQUALIZER CN# 02-32-391 SAFETRAN # 022700-1X
- DENOTES LOW VOLTAGE ARRESTOR CN# ERICO # ETSP23050
- DENOTES GROUND PLANE

SII 22 APR 2014

PROPOSED
DESIGN NO. 10-0376
RED-IN YELLOW-OUT

AS INSTALLED
DATE _____
BY _____
(PRINT NAME)

PROPOSED D	M	Y	REVISIONS	D	C	COMPLETED D	M	Y	C

REGION SOUTHERN
SUB. ILLINOIS RIVER 335

SIGNALS AND COMMUNICATIONS HOMEWOOD
22 APRIL 2014
DES. NAD
CH. BJW

BUNGALOW LAYOUT SIDE D
& L.I.G.P. INSIDE
SHOREWOOD, IL
BEITH RD

ILR-018.16-13

DOT# 261 012N

SIEMENS INDUSTRY INC
LOUISVILLE DIVISION, LOUISVILLE, KY

SIEMENS INDUSTRY INC			
DES.: NAD	DATE: 22/04/14	JOB NO.: PWCA10394	
CKD.: MRB	ISSUE DATE: N/A	EST. NO.: XP-7318	
DRN.: NAD	PLAN NO.: N/A	SHEET 13 OF 15	
P TIME: 11:19	P DATE: 29-JAN-2015	CAD ID.: ILR-018.16-13	

ilr-018.16-13.dgn
29-JAN-2015

ENTRANCE BOARD L.I.G.P.

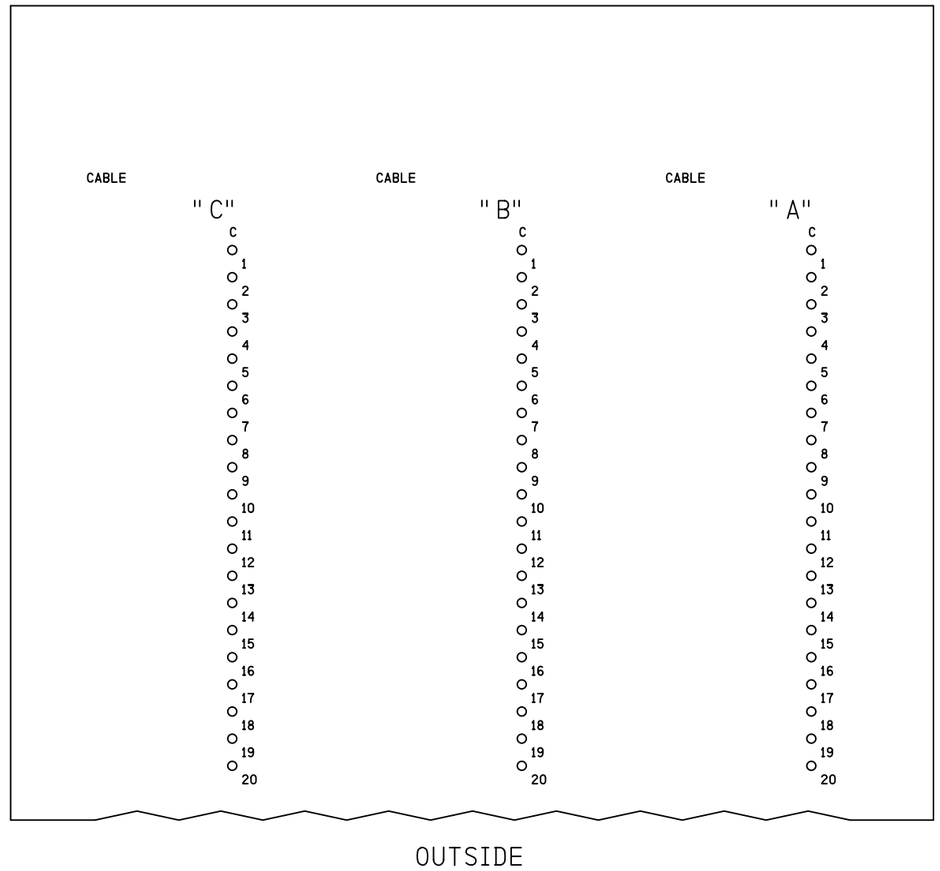

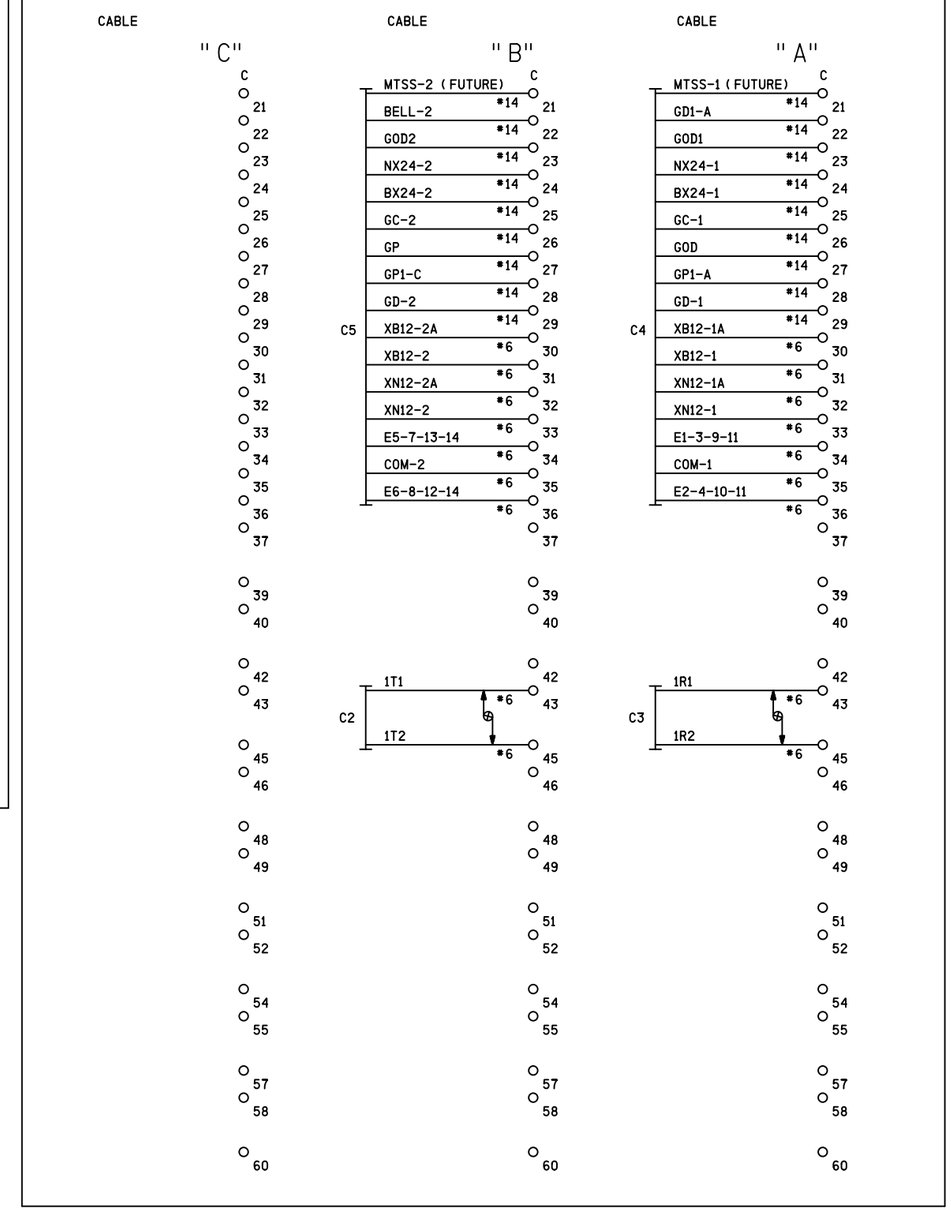

NOTE

DENOTES TWISTED PAIR

SII 22 APR 2014

PROPOSED

DESIGN NO. 10-0376

RED-IN YELLOW-OUT

AS INSTALLED

DATE _____

BY _____

(PRINT NAME)

PROPOSED D	M	Y	REVISIONS	D	C	COMPLETED D	M	Y	C

REGION SOUTHERN

SUB. ILLINOIS RIVER 335

SIGNALS AND COMMUNICATIONS HOMEWOOD

22 APRIL 2014

DES. NAD

CH. BJW

ENTRANCE BOARD L.I.G.P. OUTSIDE

SHOREWOOD, IL

BEITH RD

ILR-018.16-14

DOT# 261 012N

REVISIONS				
NO.	DATE	BY	DESCRIPTION	APP. BY
1				
2				
3				
4				
5				

SIEMENS INDUSTRY INC

DES.: NAD	DATE: 22/04/14	JOB NO.: PWCA10394	
CKD.: MRB	ISSUE DATE: N/A	EST. NO.: XP-7318	
DRN.: NAD	PLAN NO.: N/A	SHEET 14 OF 15	
P TIME: 11:19	P DATE: 29-JAN-2015	CAD ID.: ILR-018.16-14	

SIEMENS INDUSTRY INC
LOUISVILLE DIVISION, LOUISVILLE, KY

ilr-018.16-14.dgn
29-JAN-2015

REVISIONS				
NO.	DATE	BY	DESCRIPTION	APP. BY
1				
2				
3				
4				
5				

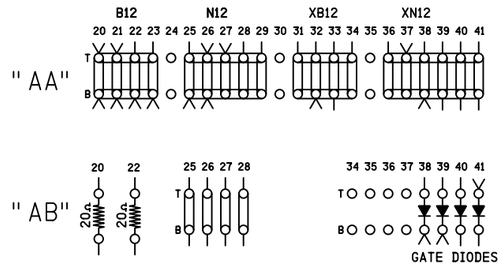

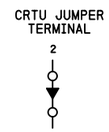

"AC"

SIDE A

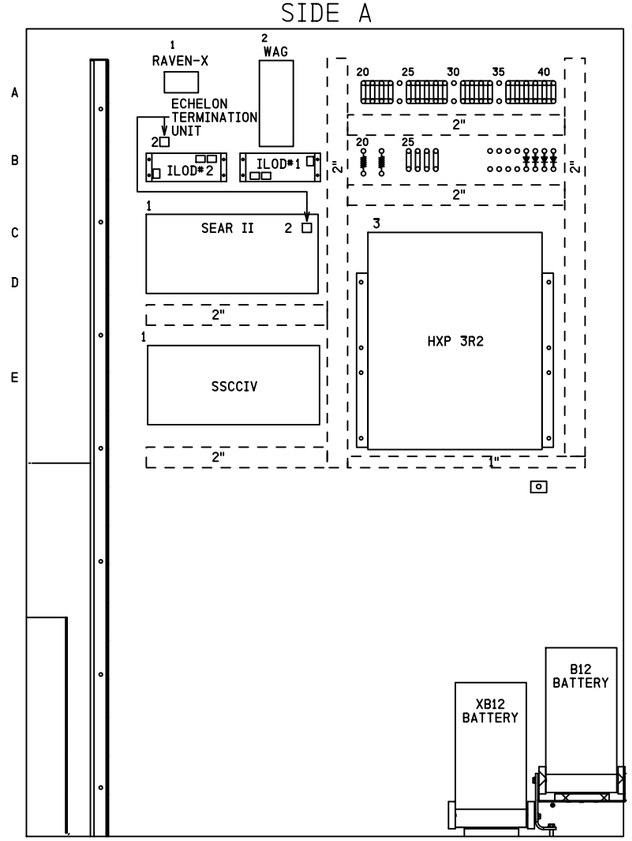

SIDE B

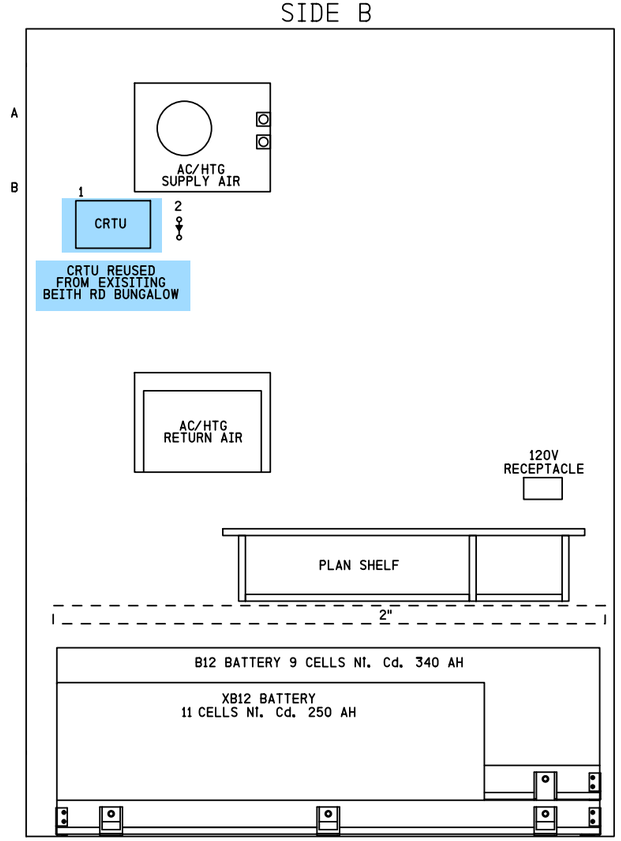

SIDE C

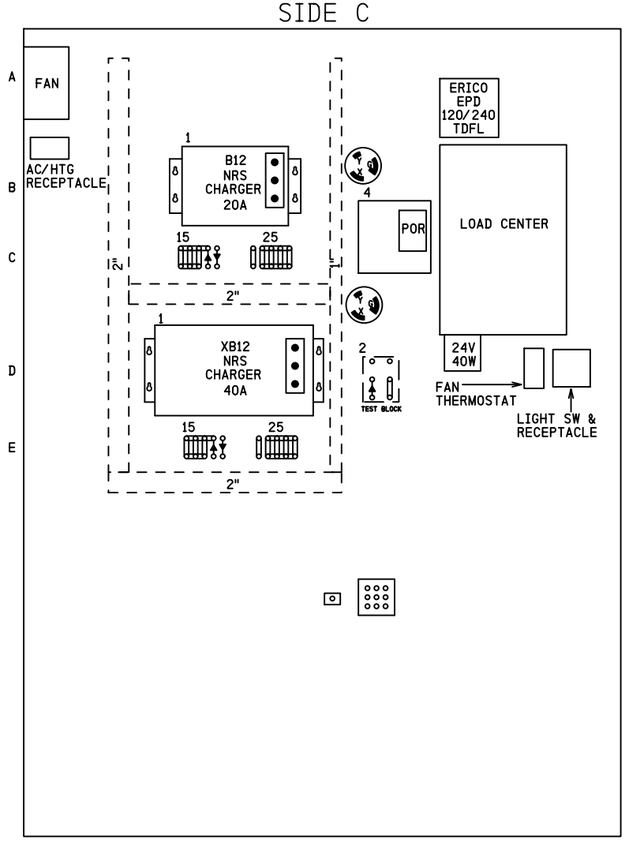

NOTES

1) SURGE PROTECTION SHOULD BE BONDED TO BUNGALOW

[ ] REPRESENTS PANDUIT

DENOTES RECTIFIER (SAFETRAN #8008A299006)

SII 22 APR 2014

PROPOSED
DESIGN NO. 10-0376
RED-IN YELLOW-OUT

AS INSTALLED
DATE _____
BY _____
(PRINT NAME)

PROPOSED D	M	Y	REVISIONS	D	C	COMPLETED D	M	Y	C

REGION SOUTHERN
SUB. ILLINOIS RIVER 335

SIGNALS AND COMMUNICATIONS HOMEWOOD
22 APRIL 2014
DES. NAD
CH. BJW

BUNGALOW LAYOUT SIDES A, B & C

SHOREWOOD, IL
BEITH RD

ILR-018.16-15

DOT# 261 012N

16

SIEMENS INDUSTRY INC

DES. : NAD	DATE: 22/04/14	JOB NO.: PWCA10394	
CKD. : MRB	ISSUE DATE: N/A	EST. NO.: XP-7318	
DRN. : NAD	PLAN NO.: N/A	SHEET 15 OF 15	
P TIME: 11:19	P DATE: 29-JAN-2015	CAD ID.: ILR-018.16-15	

SIEMENS INDUSTRY INC
LOUISVILLE DIVISION, LOUISVILLE, KY

ilr-018.16-15.dgn
29-JAN-2015