PRIME WARNING TIME = 29 SECONDS

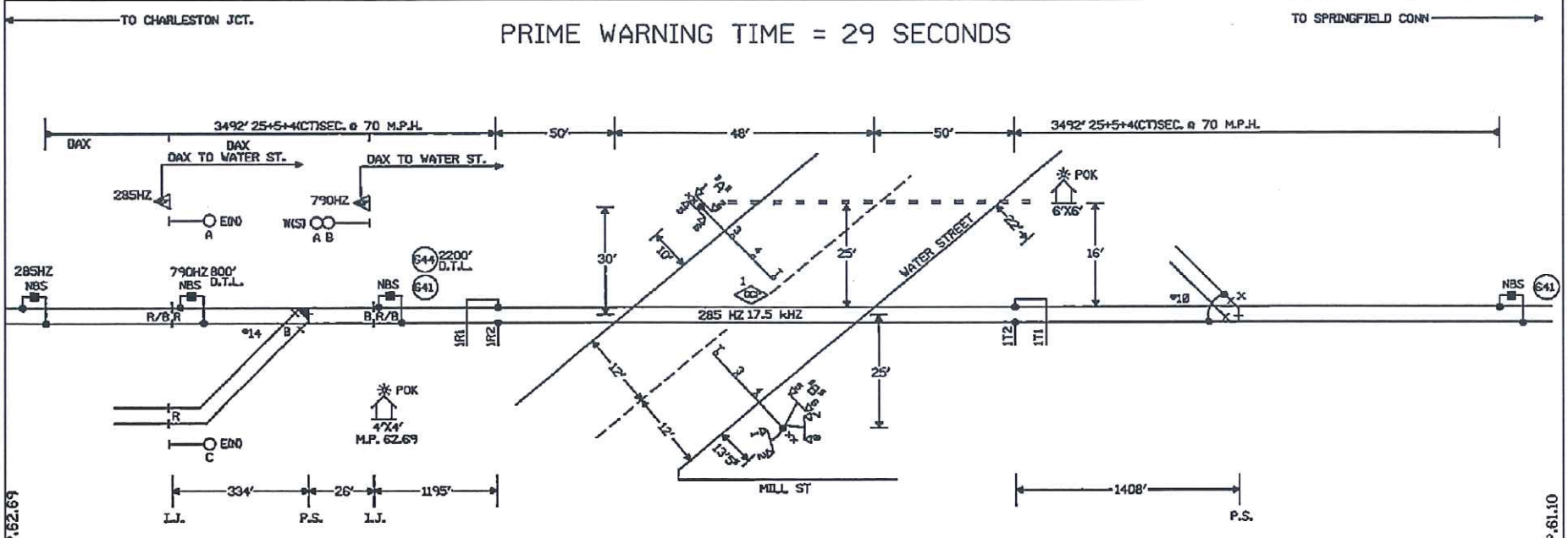

CONSTRUCTION NOTES:

1.) FIELD TO VERIFY HOUSE PLACEMENT WITH ICC
2.) FIELD TO VERIFY GATE PLACEMENT WITH ICC
3.) ORDER AND INSTALL FLASHER EXTENSION BRACKETS FOR "B" GATE

NOTES:

⊗ = TWISTED WIRES
INSULATED 1 TWIST PER FT.
ALL TRACK WIRES 2C. #6

TRANSMITTER AND RECEIVER LEADS TO BE SEPARATED BY AT LEAST 12" IN TRENCH. LENGTHS SHOULD NOT EXCEED MANUFACTURES RECOMMENDATION.

TOP OF FOUNDATION TO BE AT SAME ELEVATION AS THE SURFACE OF THE TRAVELED WAY & NO MORE THAN 4" ABOVE THE SURFACE OF THE GROUND.

ALL BUNGALOW WIRING TO BE #16 AWG FLEX UNLESS OTHERWISE SPECIFIED EXCEPT ALL GROUND WIRE TO BE #6 AWG FLEX OR LARGER.

ALL WIRING IN GATE MECHANISM TO BE #10 "AWG FLEX".

REFER TO UP STANDARD DWG FOR BUNGALOW GROUNDING.

PORTABLE GENERATOR EXTENSION CORD FOR 240V TO 240V IS PROVIDED AS WELL AS A 120V TO 240V ADAPTER.

ALL LIGHTS TO BE 12" ROUNDELS.

= = = = = = 4" X 70' CONDUIT

LIGHTS: LED LIGHTS

GATE A: 22'
GATE B: 25'

xx = BELL

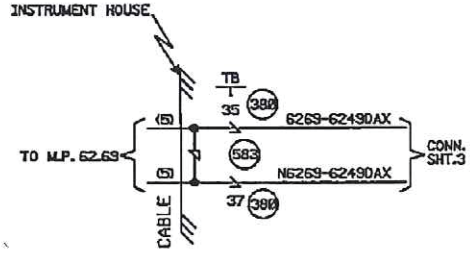

OFFSET AND ISLAND DISTANCES TO BE VERIFIED BY FIELD

W(S) ←—○—→ E(N)

CABLE TABULATION

CABLE NO. 5 7C#14 U.G.B.T. HOUSE TO M.P. 62.69

NEW SHEET

					Designed: 9/10/14 INSTALL FLASHERS GATES AND CWT AT M.P. 62.49 WATER STREET Rev#: ID: WO#: 23968 AJA /DAS/JTB	MODIFICATION LEVEL		CIRCUIT MODIFICATIONS ARE NOT TO BE MADE WITHOUT AUTHORITY FROM THE OFFICE OF SIGNAL DESIGN	Date: 9/10/14	UNION PACIFIC RAILROAD	Sh.: 1X Copy.
						Q. A. LAST LEVEL CHECKED	DU		Des: DAS	CHESTER, ILLINOIS	DOT 436230H
						LAST LEVEL MOD THIS TYPICAL	DU		Chk: AJA	WATER STREET	MP: 62.49
						LAST LEVEL BY DESIGNER	DU		AFE: 23968	CHESTER SUBDIVISION	ID: 127506249.1X
						CHANGED FROM TYPICAL?	Y			Office of AVP Engineering - Signal Omaha, Nebraska	

127506249.1X Copy.dgn 1/27/2015 12:51:33 PM

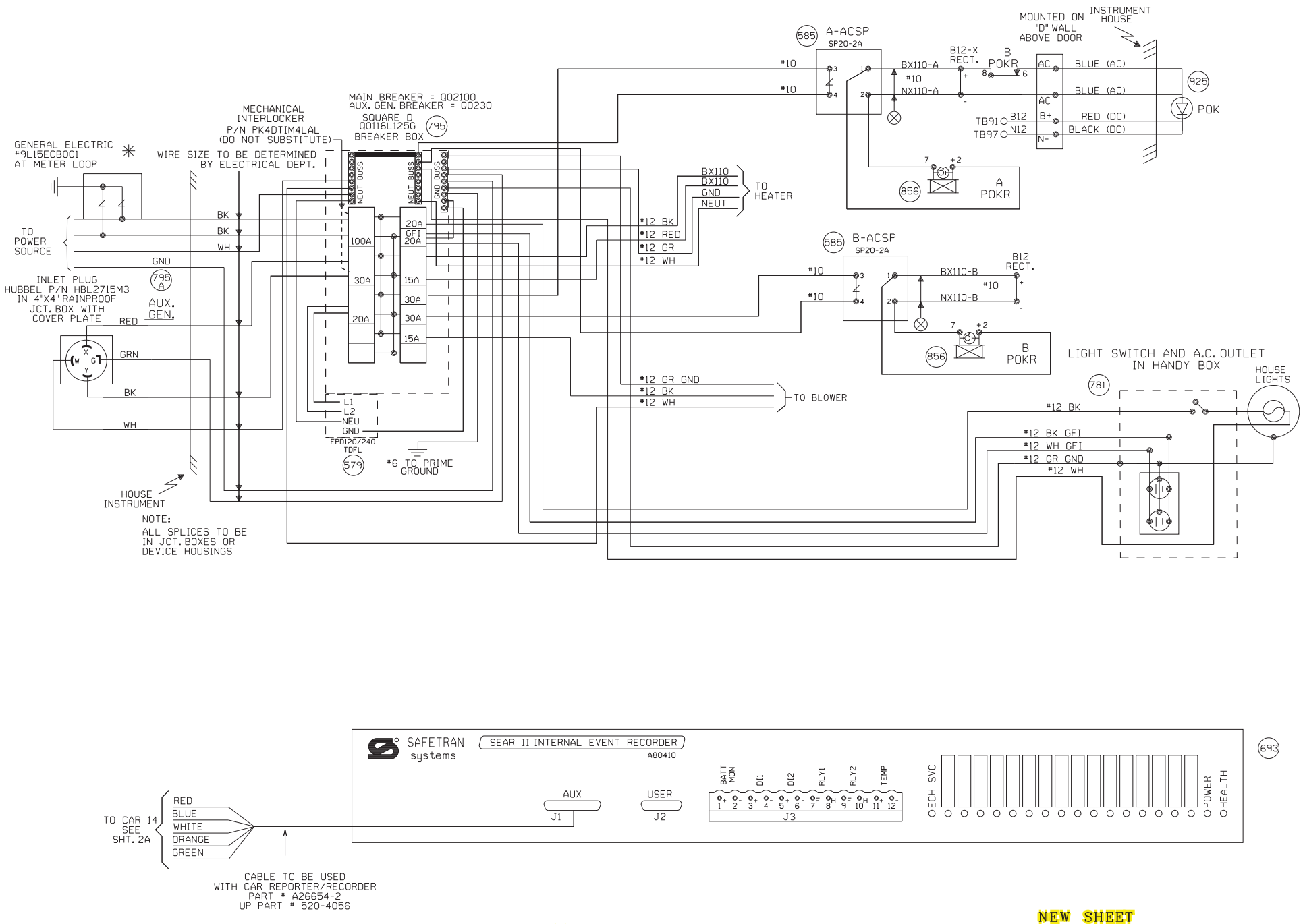

NEW SHEET

Designed: 9/10/14 INSTALL FLASHERS GATES AND CWT AT M.P. 62.49 WATER STREET Rec#: IS: WO#: 23968 /CES /DAS/JTB	MODIFICATION LEVEL		CIRCUIT MODIFICATIONS ARE NOT TO BE MADE WITHOUT AUTHORITY FROM THE OFFICE OF SIGNAL DESIGN	Date: 9/10/14	UNION PACIFIC RAILROAD	Sh.: 2
	O. A. LAST LEVEL CHECKED	DU		Des: DAS	CHESTER, ILLINOIS	DOT 436230H
	LAST LEVEL MOD THIS TYPICAL	DU		Chk: CES	WATER STREET	MP: 62.49
	LAST LEVEL BY DESIGNER	DU		AFE: 23968	CHESTER SUBDIVISION	ID: 127506249.2X
	CHANGED FROM TYPICAL?	Y			Office of AVP Engineering - Signal Omaha, Nebraska	
	REV 01.24.11 4K SEARAC.2					

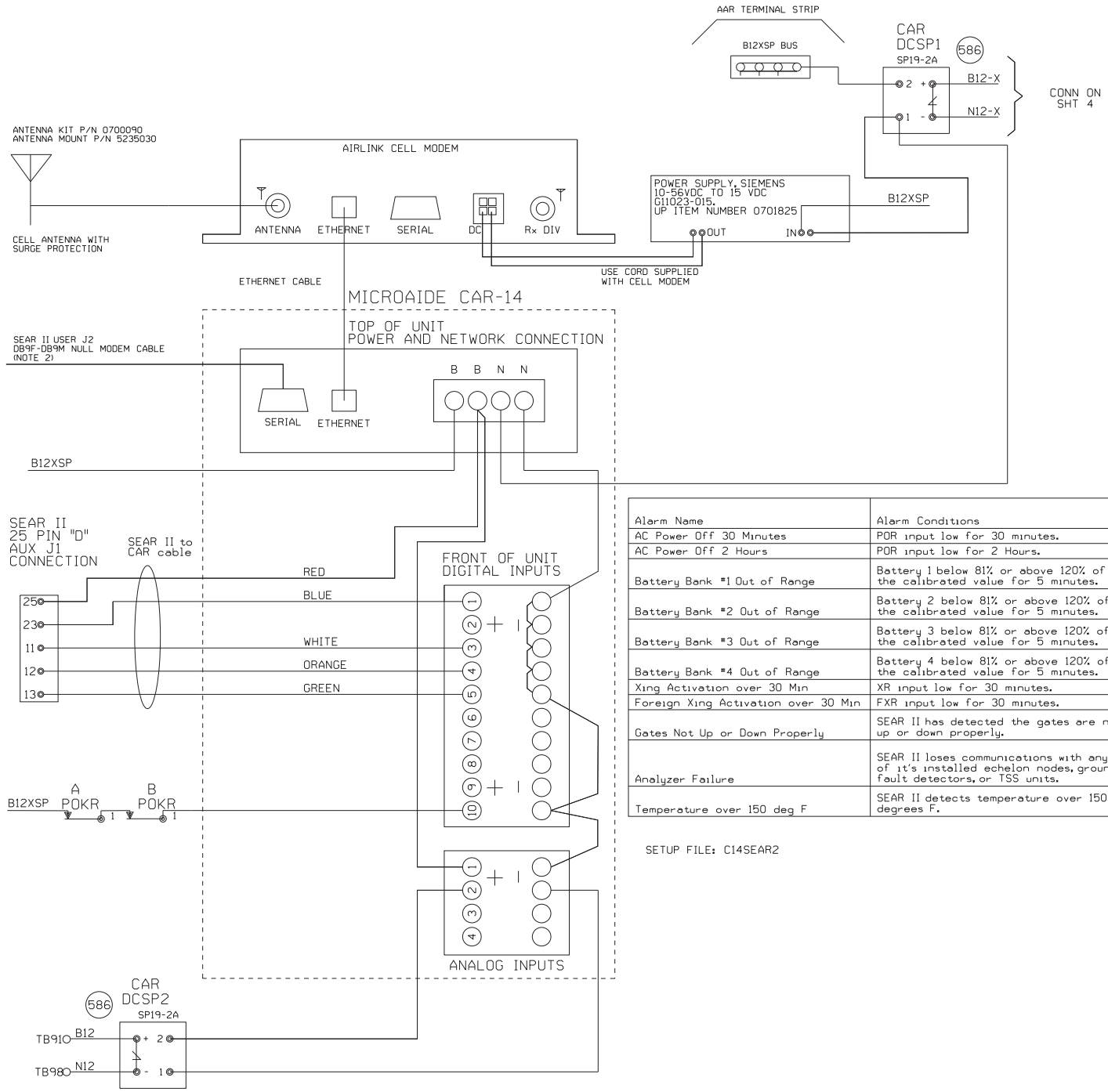

NOTE:
1) DO NOT JUMPER UNUSED INPUTS
2) THE CAR14 SERIAL PORT IS AVAILABLE TO ADD REMOTE CONNECTIVITY TO EXISTING LOGGING EQUIPMENT. USE NULL MODEM CABLE WITH SHIELDING DISCONNECTED AT ONE OR BOTH SIDES.

ANALOG INPUTS:
A1) B12X BATTERY BANK
A2) B12 BATTERY BANK
A3) BATTERY BANK 3
A4) BATTERY BANK 4

DIGITAL INPUTS
D1) XR (BLUE WIRE)
D2) FOREIGN XR
D3) ANALYZER FAILURE (WHITE WIRE)
D4) HIGH TEMPERATURE (ORANGE WIRE)
D5) GATES NOT UP OR DOWN PROPERLY (GREEN WIRE)
D10) POWER OFF INDICATION

Alarm Name	Alarm Conditions	Alarm Clearing Conditions	Cleared by Maintainer Mode?
AC Power Off 30 Minutes	POR input low for 30 minutes.	POR input high for 5 minutes.	No
AC Power Off 2 Hours	POR input low for 2 Hours.	POR input high for 5 minutes.	No
Battery Bank #1 Out of Range	Battery 1 below 81% or above 120% of the calibrated value for 5 minutes.	Battery 1 within acceptable range for 5 minutes.	No
Battery Bank #2 Out of Range	Battery 2 below 81% or above 120% of the calibrated value for 5 minutes.	Battery 2 within acceptable range for 5 minutes.	No
Battery Bank #3 Out of Range	Battery 3 below 81% or above 120% of the calibrated value for 5 minutes.	Battery 3 within acceptable range for 5 minutes.	No
Battery Bank #4 Out of Range	Battery 4 below 81% or above 120% of the calibrated value for 5 minutes.	Battery 4 within acceptable range for 5 minutes.	No
Xing Activation over 30 Min	XR input low for 30 minutes.	XR input high for 10 seconds.	Yes
Foreign Xing Activation over 30 Min	FXR input low for 30 minutes.	FXR input high for 10 seconds.	Yes
Gates Not Up or Down Properly	SEAR II has detected the gates are not up or down properly.	SEAR II has detected the gates are up or down properly.	No
Analyzer Failure	SEAR II loses communications with any of it's installed echelon nodes, ground fault detectors, or TSS units.	SEAR II has recovered after an analyzer failure alarm.	No
Temperature over 150 deg F	SEAR II detects temperature over 150 degrees F.	SEAR II sensor detects temperature is OK after a High-Temp alarm.	No

SETUP FILE: C14SEAR2

NEW SHEET

Designed: 9/10/14
INSTALL FLASHERS GATES AND CWT AT M.P. 62.49 WATER STREET
Rec#: IS:
WO#: 23968 /CES /DAS/JTB

MODIFICATION LEVEL	
Q.A. LAST LEVEL CHECKED	DU
LAST LEVEL MOD THIS TYPICAL	DU
LAST LEVEL BY DESIGNER	DU
CHANGED FROM TYPICAL?	Y

REV 01.24.11 4K ACDCCAR14S11.3

CIRCUIT MODIFICATIONS ARE NOT TO BE MADE WITHOUT AUTHORITY FROM THE OFFICE OF SIGNAL DESIGN

Date: 9/10/14
Des: DAS
Chk: CES
AFE: 23968

UNION PACIFIC RAILROAD
CHESTER, ILLINOIS
WATER STREET
CHESTER SUBDIVISION
Office of AVP Engineering - Signal Omaha, Nebraska

Sh.: 2A
DOT 436230H
MP: 62.49
ID: 127506249.2AX

127506249.2AX 12/8/2014 8:52:33 AM

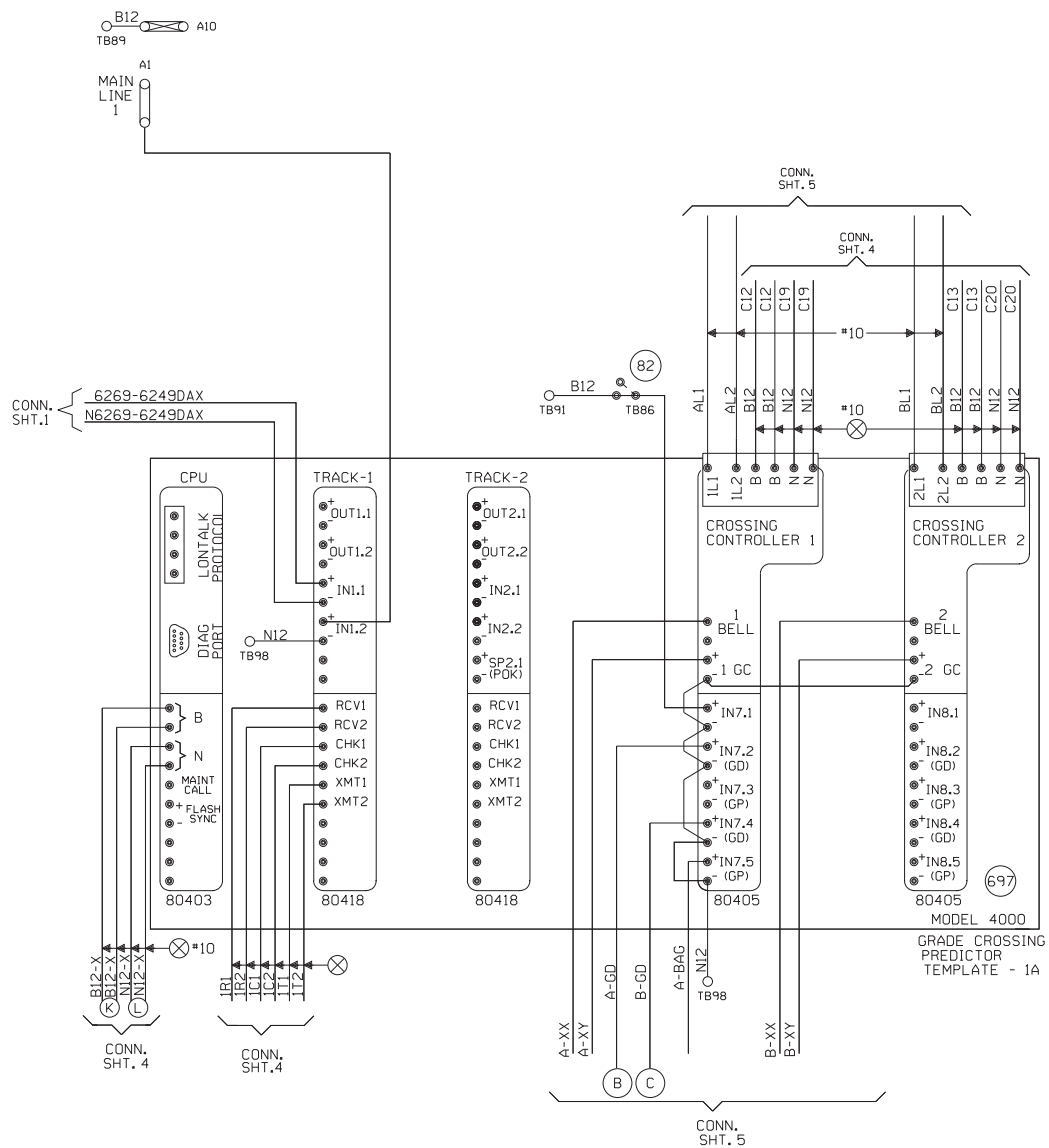

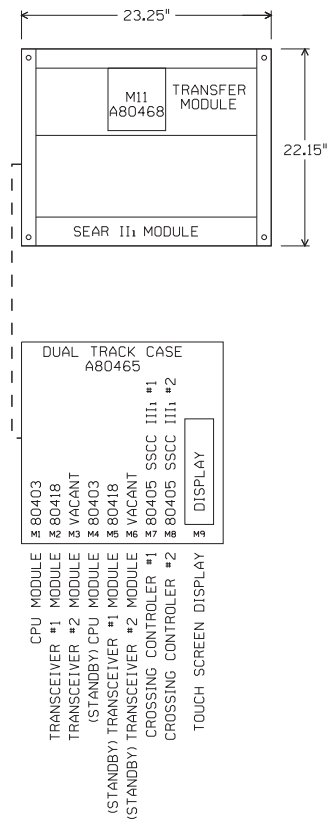

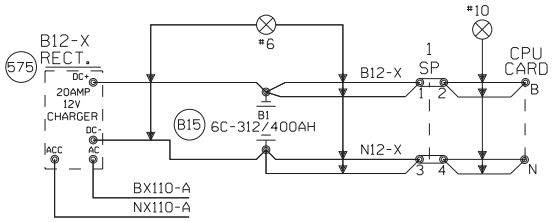

"Mf" FREQUENCY (HZ)	MAXIMUM TRANSMIT WIRE LENGTH (FEET)
86	100
114	125
156	150
211	200
285-970	250

NOTE:
EACH TRANSMITTER TO RAIL WIRE FROM XMT1 AND XMT2 MUST NOT EXCEED THE MAXIMUM LENGTH SPECIFIED IN THE TABLE SHOWN. THE RECEIVER WIRE LENGTH IS NOT CRITICAL. DOES NOT APPLY TO 6 TRACK WIRE APPLICATION.

NEW SHEET

Designed: 9/10/14
INSTALL FLASHERS GATES AND CWT AT M.P. 62.49 WATER STREET
Rec#: IS:
WO#: 23968 /CES /DAS/JTB

MODIFICATION LEVEL	
D. A. LAST LEVEL CHECKED	DU
LAST LEVEL MOD THIS TYPICAL	DU
LAST LEVEL BY DESIGNER	DU
CHANGED FROM TYPICAL?	Y

REV 01.24.11 4K 2TKGF.3

CIRCUIT MODIFICATIONS ARE NOT TO BE MADE WITHOUT AUTHORITY FROM THE OFFICE OF SIGNAL DESIGN

Date: 9/10/14
Des: DAS
Chk: CES
AFE: 23968

UNION PACIFIC RAILROAD
CHESTER, ILLINOIS
WATER STREET
CHESTER SUBDIVISION
Office of AVP Engineering - Signal Omaha, Nebraska

Sh.: 3
DOT 436230H
MP: 62.49
ID: 127506249.3X

127506249.3X 12/8/2014 8:52:39 AM

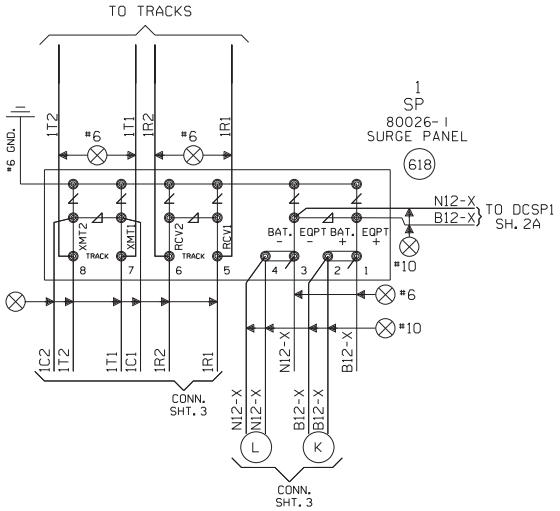

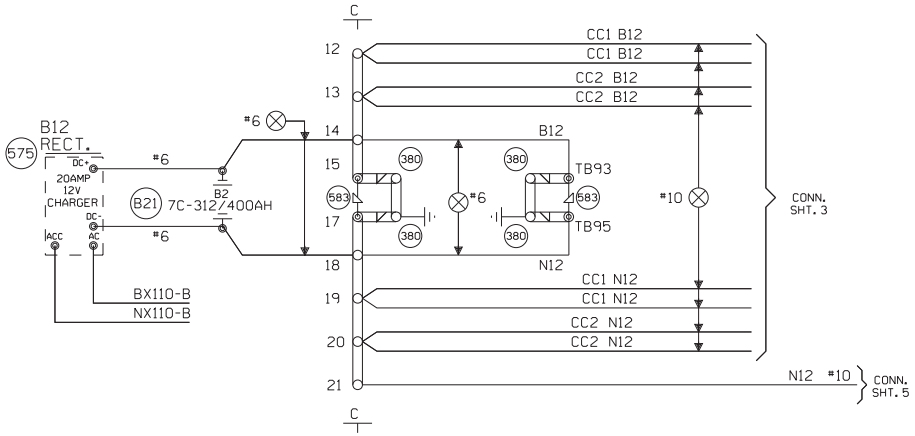

NEW SHEET

Designed: 9/10/14 INSTALL FLASHERS GATES AND CWT AT M.P. 62.49 WATER STREET Rec#: IS: WO#: 23968 /CES /DAS/JTB	MODIFICATION LEVEL		CIRCUIT MODIFICATIONS ARE NOT TO BE MADE WITHOUT AUTHORITY FROM THE OFFICE OF SIGNAL DESIGN	Date: 9/10/14	UNION PACIFIC RAILROAD	Sh.: 4
	D. A. LAST LEVEL CHECKED	DU		Des: DAS	CHESTER, ILLINOIS	DOT 436230H
	LAST LEVEL MOD THIS TYPICAL	DU		Chk: CES	WATER STREET	MP: 62.49
	LAST LEVEL BY DESIGNER	DU		AFE: 23968	CHESTER SUBDIVISION	ID: 127506249.4X
	CHANGED FROM TYPICAL?	Y			Office of AVP Engineering - Signal Omaha, Nebraska	
	REV 01.24.11 4K 4TKSPGFC.4					

127506249.4X 12/8/2014 8:52:41 AM

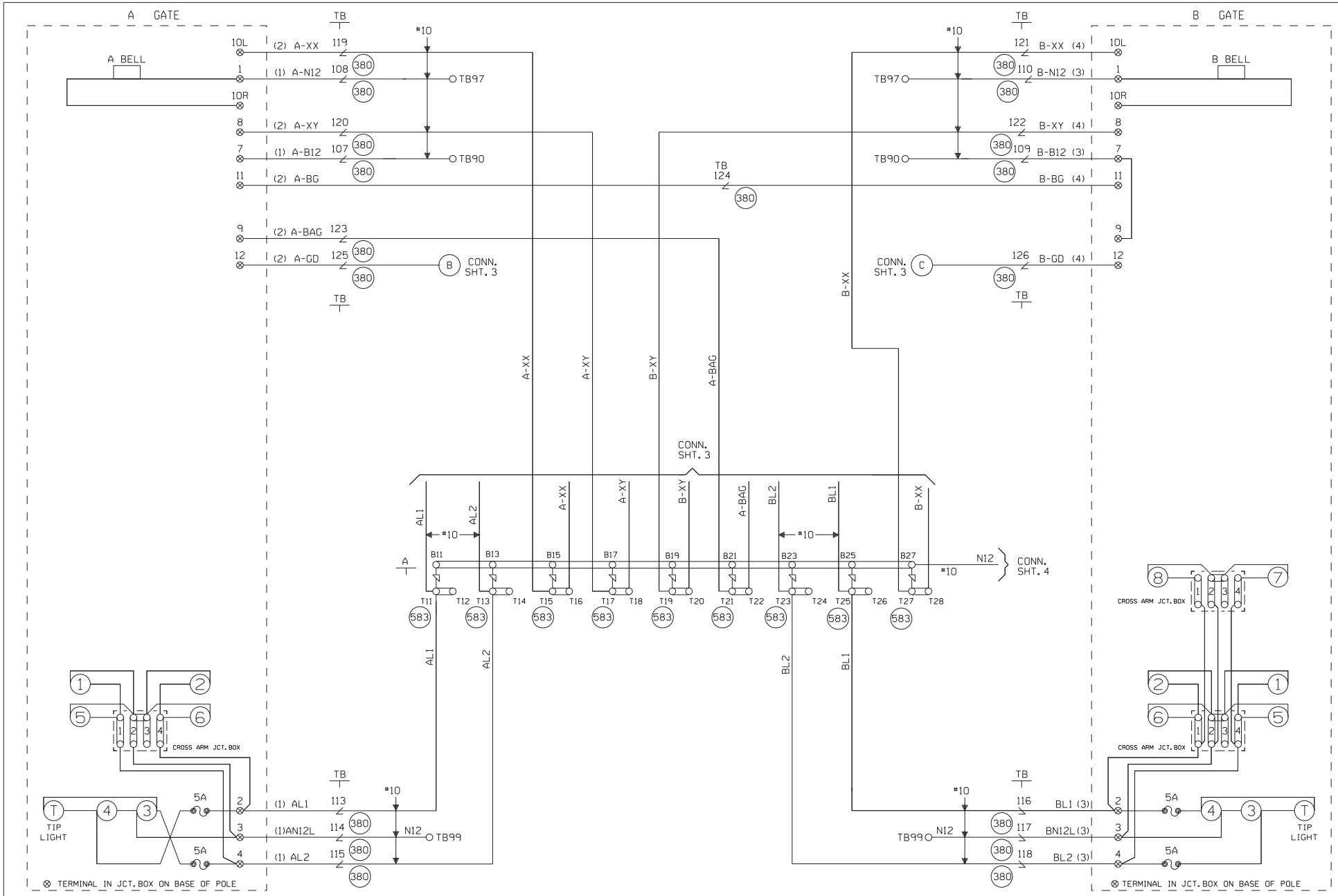

CABLE TABULATION

CABLE NO. 1 5C. NO.6 U.G.B.T. TO GATE A
CABLE NO. 2 7C. NO.14 U.G.B.T. TO GATE A
CABLE NO. 3 5C. NO.6 U.G.B.T. TO GATE B
CABLE NO. 4 7C. NO.14 U.G.B.T. TO GATE B

NEW SHEET

Designed: 9/10/14
INSTALL FLASHERS GATES AND CWT AT M.P. 62.49 WATER STREET
Rec#: 151
WO#: 23968 /CES
/ /DAS/JTB

MODIFICATION LEVEL	
D. A. LAST LEVEL CHECKED	DU
LAST LEVEL MOD THIS TYPICAL	DU
LAST LEVEL BY DESIGNER	DU
CHANGED FROM TYPICAL?	Y

REV 01.24.11 4K GFSLTYP.5

CIRCUIT MODIFICATIONS ARE NOT TO BE MADE WITHOUT AUTHORITY FROM THE OFFICE OF SIGNAL DESIGN

Date: 9/10/14
Des: DAS
Chk: CES
AFE: 23968

UNION PACIFIC RAILROAD

CHESTER, ILLINOIS
WATER STREET
CHESTER SUBDIVISION

Office of AVP Engineering - Signal Omaha, Nebraska

Sh.: 5
DOT 436230H
MP: 62.49
ID: 127506249.5X

127506249.5X 12/8/2014 8:52:44 AM

WCH 3593-E

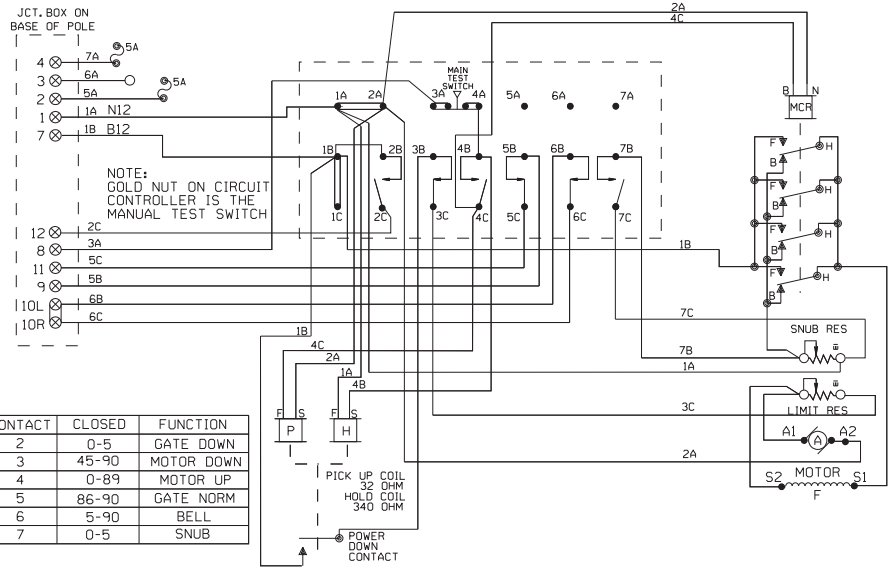

CONTACT	CLOSED	FUNCTION
2	0-5	GATE DOWN
3	45-90	MOTOR DOWN
4	0-89	MOTOR UP
5	86-90	GATE NORM
6	5-90	BELL
7	0-5	SNUB

WCH 3597-E

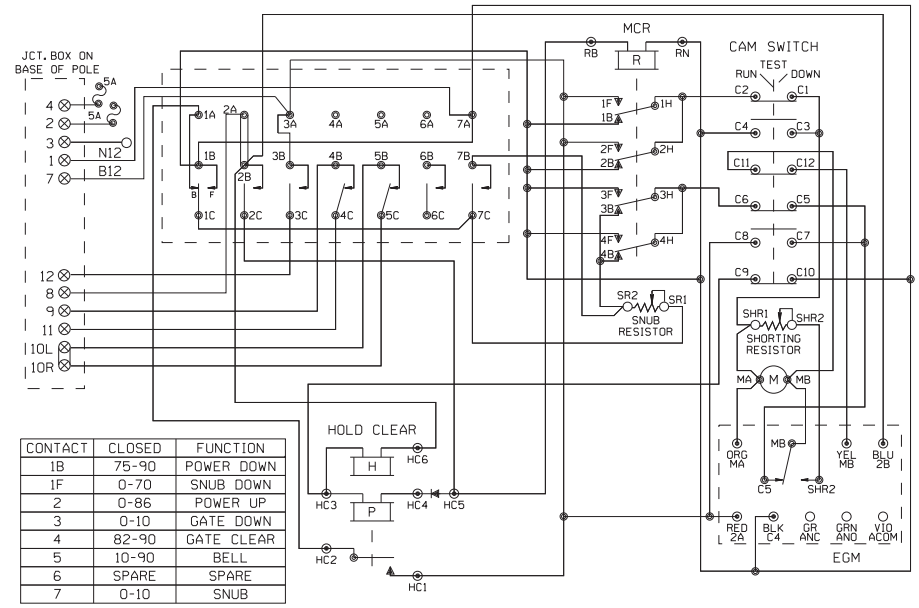

CONTACT	CLOSED	FUNCTION
1B	75-90	POWER DOWN
1F	0-70	SNUB DOWN
2	0-86	POWER UP
3	0-10	GATE DOWN
4	82-90	GATE CLEAR
5	10-90	BELL
6	SPARE	SPARE
7	0-10	SNUB

WCH 3597-RB

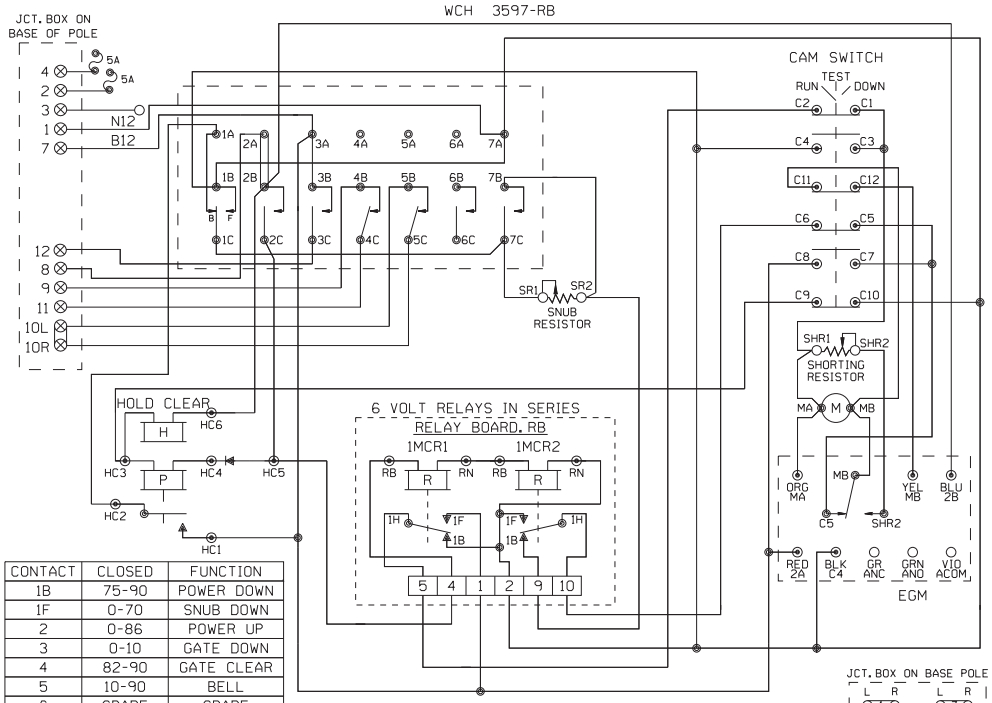

CONTACT	CLOSED	FUNCTION
1B	75-90	POWER DOWN
1F	0-70	SNUB DOWN
2	0-86	POWER UP
3	0-10	GATE DOWN
4	82-90	GATE CLEAR
5	10-90	BELL
6	SPARE	SPARE
7	0-10	SNUB

JCT. BOX ON BASE POLE

L	R	L	R
1		7	
2		8	
3		9	
4		10	
5		11	
6		12	

SHOW TYPE MECH. INSTALLED

ALL MECHANISMS SHOWN IN THE CLEAR POSITION

SAFETRAN S-60

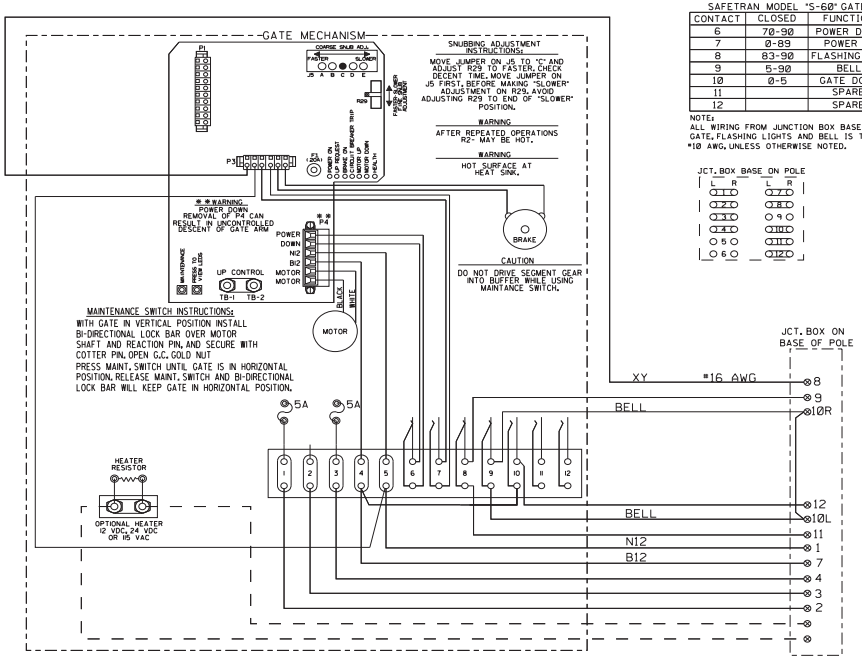

SAFETRAN MODEL "S-60" GATE

CONTACT	CLOSED	FUNCTION
6	70-90	POWER DOWN
7	0-89	POWER UP
8	83-90	FLASHING LGT.
9	5-90	BELL
10	0-5	GATE DOWN
11		SPARE
12		SPARE

NOTE:
ALL WIRING FROM JUNCTION BOX BASE TO GATE, FLASHING LIGHTS AND BELL IS TO BE #10 AWG, UNLESS OTHERWISE NOTED.

JCT. BOX BASE ON POLE

L	R	L	R
1		7	
2		8	
3		9	
4		10	
5		11	
6		12	

NEW SHEET

Designed: 9/10/14
INSTALL FLASHERS GATES AND CWT AT M.P. 62.49 WATER STREET
Rec#: 151
WO#: 23968
CES
DAS/JTB

MODIFICATION LEVEL	
D. A. LAST LEVEL CHECKED	DU
LAST LEVEL MOD THIS TYPICAL	DU
LAST LEVEL BY DESIGNER	DU
CHANGED FROM TYPICAL?	N

REV 01.24.11 4K GWIRING.7

CIRCUIT MODIFICATIONS ARE NOT TO BE MADE WITHOUT AUTHORITY FROM THE OFFICE OF SIGNAL DESIGN

Date: 9/10/14
Des: DAS
Chk: CES
AFE: 23968

UNION PACIFIC RAILROAD

CHESTER, ILLINOIS
WATER STREET
CHESTER SUBDIVISION

Office of AVP Engineering - Signal Omaha, Nebraska

Sh.: 6
DOT 436230H
MP: 62.49
ID: 127506249.6X

127506249.6X 12/8/2014 8:52:47 AM

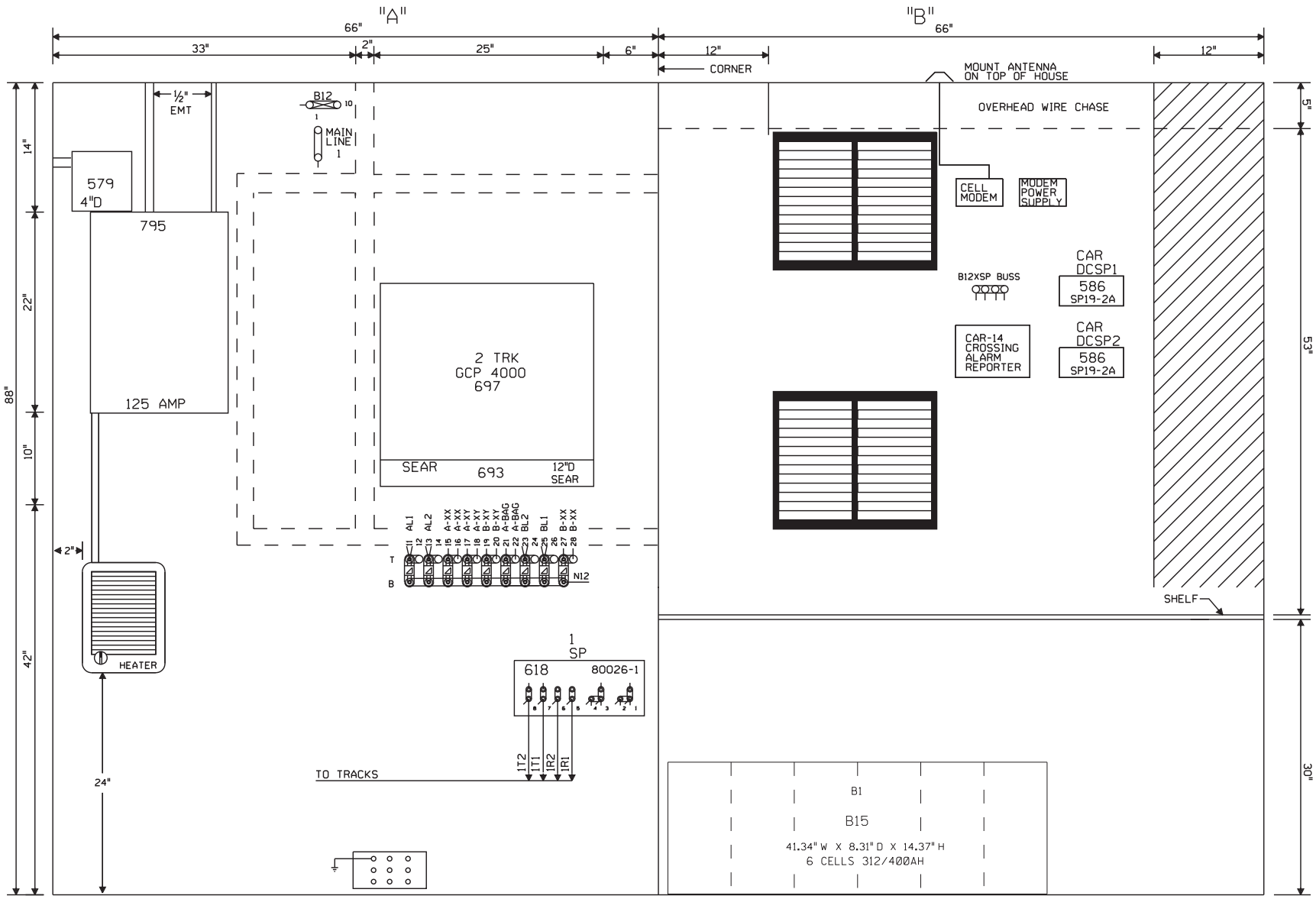

6X6 HOUSE WITH HEATER AND BLOWER & TIB U.P. PART#520-2530

NOTE: ALL DIMENSIONS SHOWN ARE APPROXIMATE.

NEW SHEET

Designed: 9/10/14
INSTALL FLASHERS GATES AND CWT AT M.P. 62.49 WATER STREET
Rec#: IS: WO#: 23968 /CES /DAS/JTB

MODIFICATION LEVEL	
O.A. LAST LEVEL CHECKED	DU
LAST LEVEL MOD THIS TYPICAL	DU
LAST LEVEL BY DESIGNER	DU
CHANGED FROM TYPICAL?	Y

REV 01.24.11 4K 4TKGFC.8

CIRCUIT MODIFICATIONS ARE NOT TO BE MADE WITHOUT AUTHORITY FROM THE OFFICE OF SIGNAL DESIGN

Date:	9/10/14
Des:	DAS
Chk:	CES
AFE:	23968

UNION PACIFIC RAILROAD
CHESTER, ILLINOIS
WATER STREET
CHESTER SUBDIVISION
Office of AVP Engineering - Signal Omaha, Nebraska

Sh.:	7
DOT	436230H
MP:	62.49
ID:	127506249.7X

127506249.7X 12/8/2014 8:52:49 AM

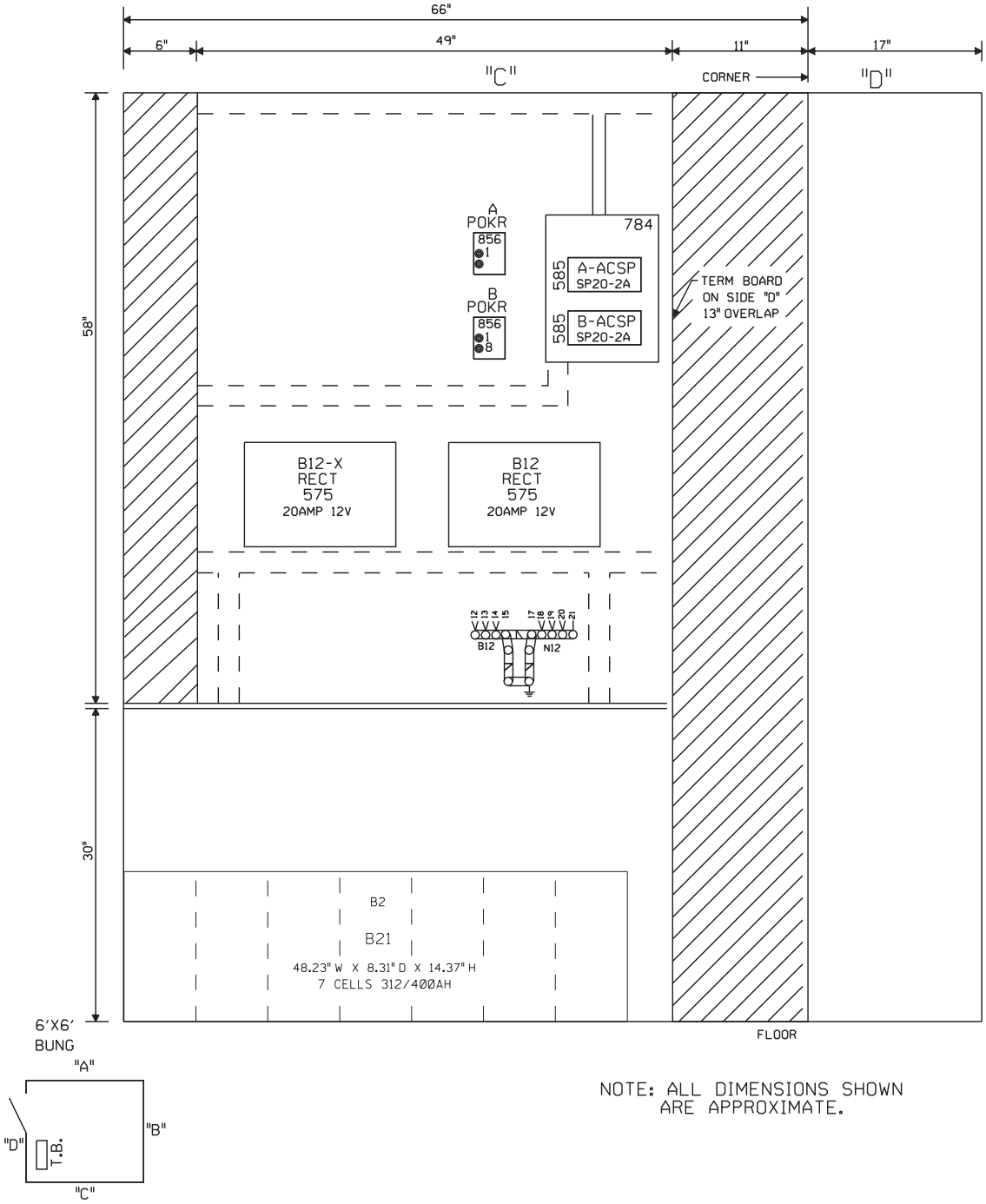

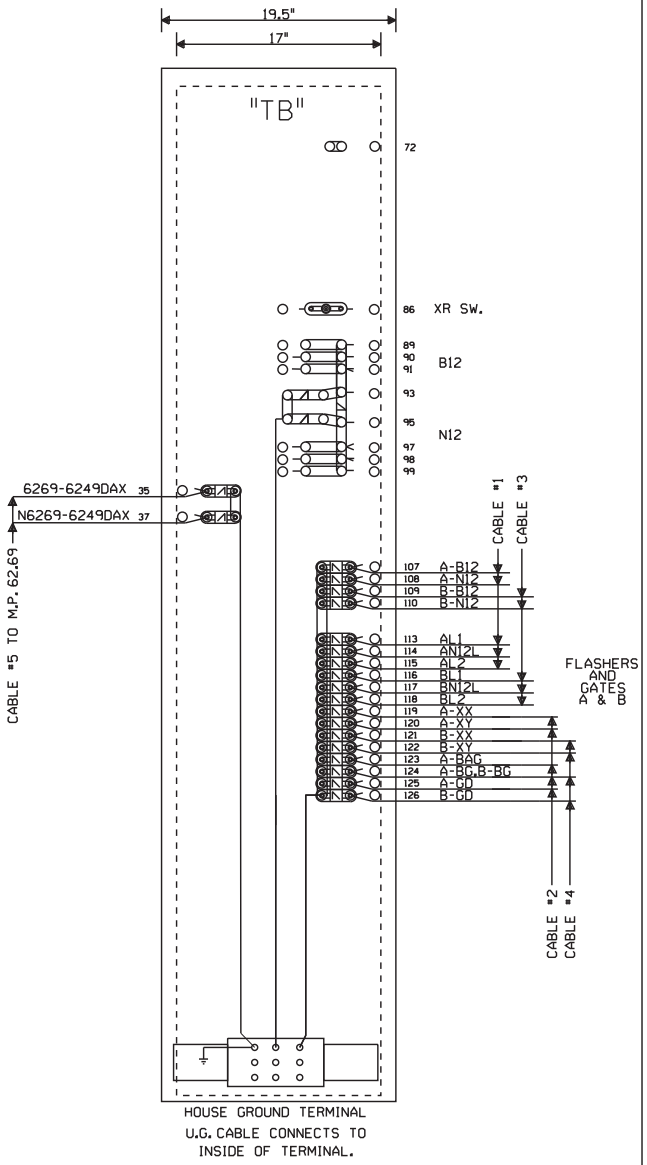

NOTE: ALL DIMENSIONS SHOWN ARE APPROXIMATE.

NOTE: NO TEST LINKS TO BE INSTALLED WITH CROSSING LIGHTING OR GATE MECH CIRCUITRY

NEW SHEET

Designed: 9/10/14
INSTALL FLASHERS GATES AND CWT AT M.P. 62.49 WATER STREET
Rec'd: IS:
WO#: 23968 /CES /DAS/JTB

MODIFICATION LEVEL	
Q.A. LAST LEVEL CHECKED	DU
LAST LEVEL MOD THIS TYPICAL	DU
LAST LEVEL BY DESIGNER	DU
CHANGED FROM TYPICAL?	Y

REV 01.24.11 4K 4GF.10

CIRCUIT MODIFICATIONS ARE NOT TO BE MADE WITHOUT AUTHORITY FROM THE OFFICE OF SIGNAL DESIGN

Date:	9/10/14
Des:	DAS
Chk:	CES
AFE:	23968

UNION PACIFIC RAILROAD
CHESTER, ILLINOIS
WATER STREET
CHESTER SUBDIVISION
Office of AVP Engineering - Signal Omaha, Nebraska

Sh.:	8
DOT	436230H
MP:	62.49
ID:	127506249.8X

127506249.8X 12/8/2014 8:52:52 AM

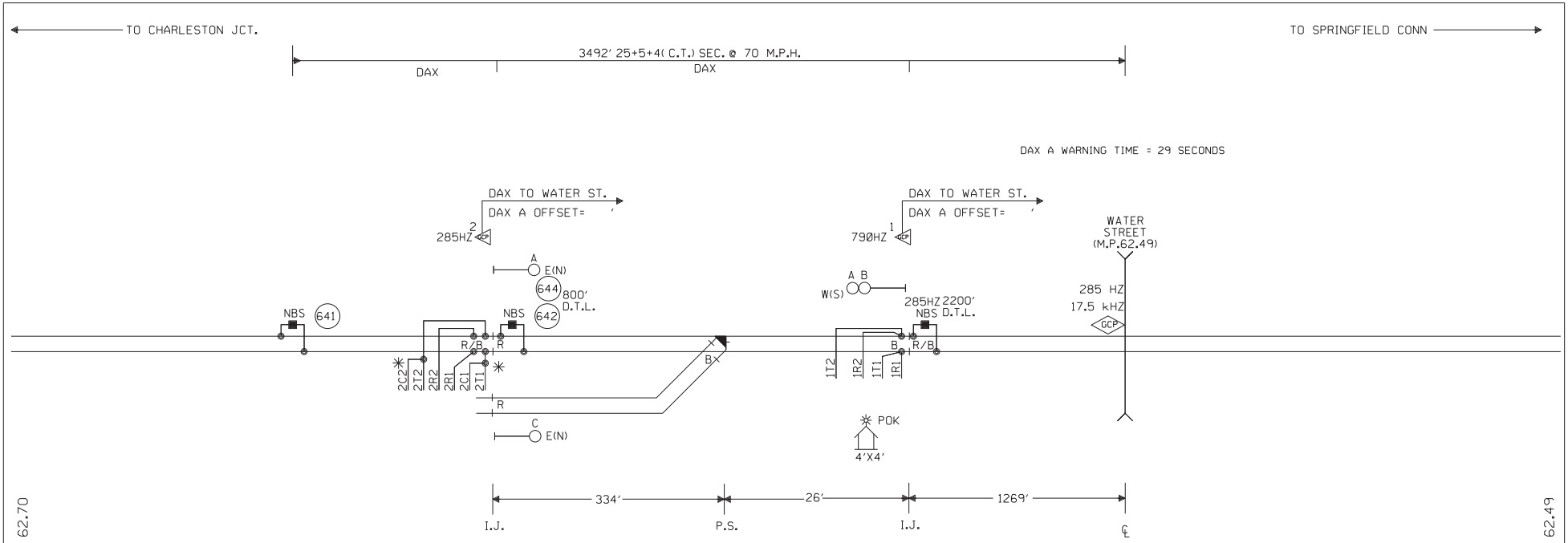

✳ TIE THE CHECK AND TRANSMIT TRACK WIRES TOGETHER AT OR NEAR THE BOOTLEG CONNECTION AND RUN A SINGLE WIRE TO THE RAIL.

NOTES:

⊗ = TWISTED WIRES
ALL TRACK WIRES 2C. #6
INSULATED 1 TWIST PER FT.

TRANSMITTER AND RECEIVER LEADS TO BE SEPARATED BY AT LEAST 12" IN TRENCH, LENGTHS SHOULD NOT EXCEED MANUFACTURES RECOMMENDATION.

ALL BUNGALOW WIRING TO BE #16 AWG FLEX UNLESS OTHERWISE SPECIFIED EXCEPT ALL GROUND WIRE TO BE #6 AWG FLEX OR LARGER.

REFER TO UP STANDARD DWG. FOR BUNGALOW GROUNDING.

PORTABLE GENERATOR EXTENSION CORD FOR 240V TO 240V IS PROVIDED AS WELL AS A 120V TO 240V ADAPTER.

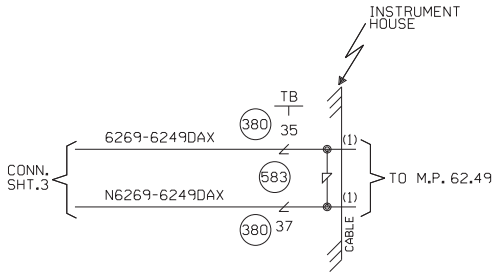

OFFSET AND ISLAND DISTANCES TO BE VERIFIED BY FIELD

W(S) ◄——○——► E(N)

CABLE TABULATION

CABLE #1 7C#14 U.G.B.T. HOUSE TO MP. 62.49

NEW SHEET

Designed: 9/02/14	MODIFICATION LEVEL		CIRCUIT MODIFICATIONS ARE NOT TO BE MADE WITHOUT AUTHORITY FROM THE OFFICE OF SIGNAL DESIGN	Date: 9/02/14	UNION PACIFIC RAILROAD
INSTALL FLASHERS GATES AND CWT AT M.P. 62.49 WATER STREET	D. A. LAST LEVEL CHECKED	DU		Des: DAS	CHESTER, ILLINOIS REMOTE LOCATION CHESTER SUBDIVISION
	LAST LEVEL MOD THIS TYPICAL	DU		Chk: AJA	
	LAST LEVEL BY DESIGNER	DU		AFE: 23968	
Rec#: 151 WO#: 23968 /AJA /DAS/JTB	CHANGED FROM TYPICAL?	Y			Office of AVP Engineering - Signal Omaha, Nebraska
	REV 01.24.11 4K REMOTE.1				

Sh.: 1
DOT 000000R
MP: 62.69
ID: 127506269.1X

127506269.1X 12/8/2014 8:52:16 AM

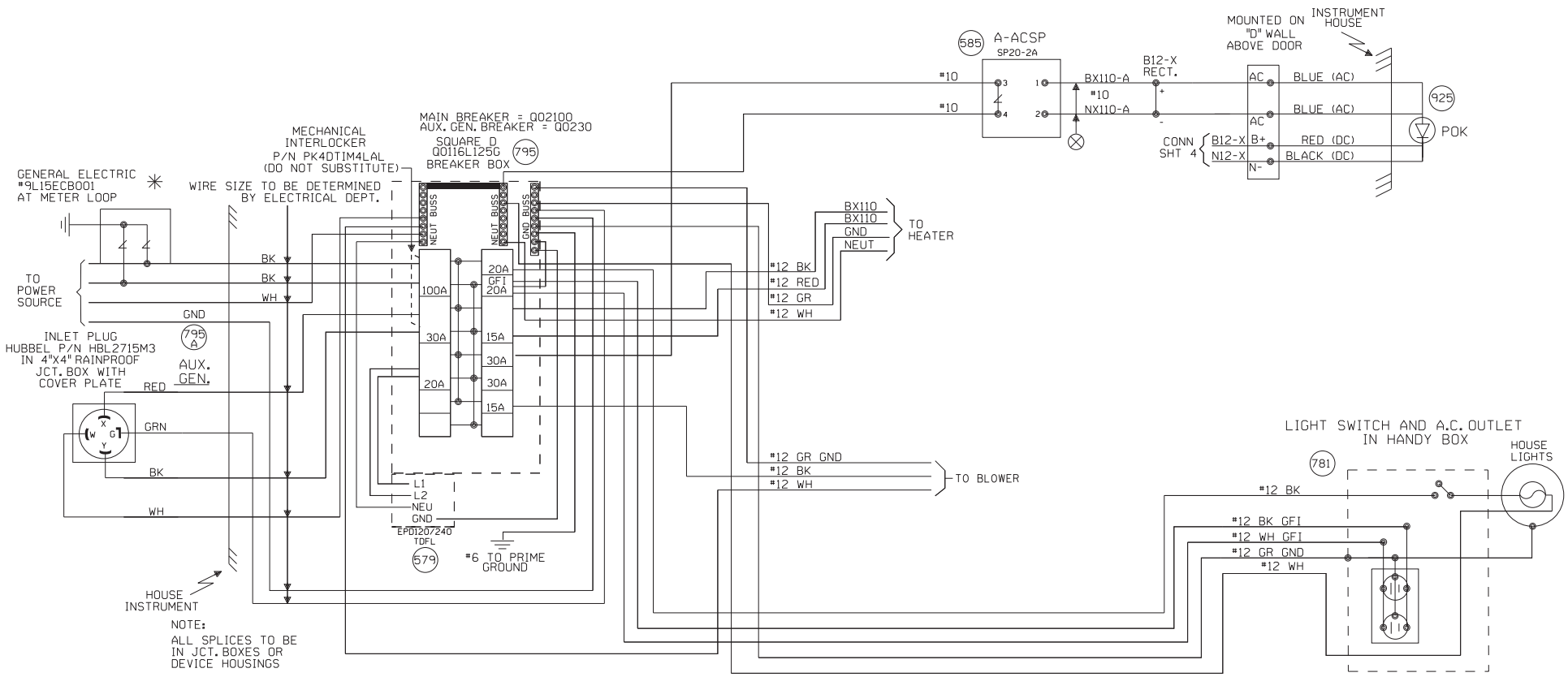

NOTE:
ALL SPLICES TO BE
IN JCT. BOXES OR
DEVICE HOUSINGS

NEW SHEET

Designed: 9/02/14
INSTALL FLASHERS
GATES AND CWT AT
M.P. 62.49
WATER STREET
Rec'd:
15:
WO#: 23968
/CES
/DAS/JTB

MODIFICATION LEVEL	
O. A. LAST LEVEL CHECKED	DU
LAST LEVEL MOD THIS TYPICAL	DU
LAST LEVEL BY DESIGNER	DU
CHANGED FROM TYPICAL?	Y

REV 01.24.11 4K SEARAC.2

CIRCUIT MODIFICATIONS ARE NOT TO BE MADE WITHOUT AUTHORITY FROM THE OFFICE OF SIGNAL DESIGN

Date: 9/02/14
Des: DAS
Chk: CES
AFE: 23968

UNION PACIFIC RAILROAD
CHESTER, ILLINOIS
REMOTE LOCATION
CHESTER SUBDIVISION
Office of AVP Engineering - Signal Omaha, Nebraska

Sh.: 2
DOT 000000R
MP: 62.69
ID: 127506269.2X

127506269.2X 12/8/2014 8:53:19 AM

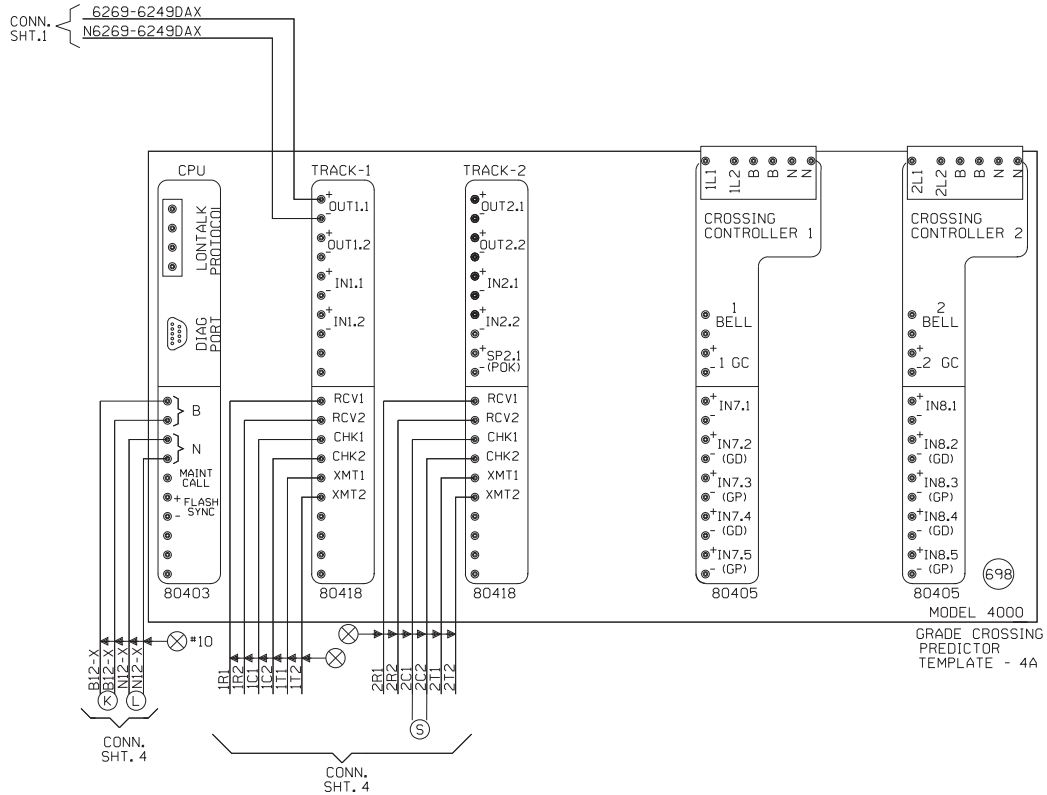

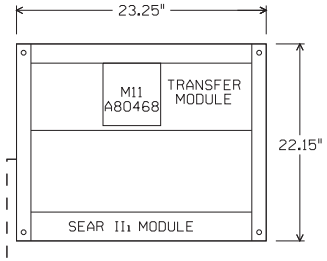

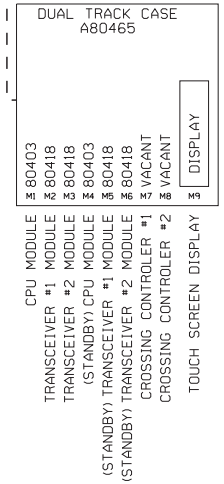

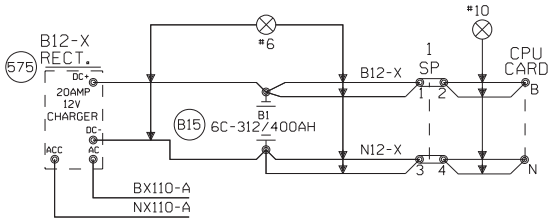

"Mf" FREQUENCY (HZ)	MAXIMUM TRANSMIT WIRE LENGTH (FEET)
86	100
114	125
156	150
211	200
285-970	250

NOTE:
EACH TRANSMITTER TO RAIL WIRE FROM XMT1 AND XMT2 MUST NOT EXCEED THE MAXIMUM LENGTH SPECIFIED IN THE TABLE SHOWN. THE RECEIVER WIRE LENGTH IS NOT CRITICAL. DOES NOT APPLY TO 6 TRACK WIRE APPLICATION.

NEW SHEET

Designed: 9/02/14
INSTALL FLASHERS GATES AND CWT AT M.P. 62.49 WATER STREET
Rec#: 151
WO#: 23968 /CES
/ /DAS/JTB

MODIFICATION LEVEL	
D. A. LAST LEVEL CHECKED	DU
LAST LEVEL MOD THIS TYPICAL	DU
LAST LEVEL BY DESIGNER	DU
CHANGED FROM TYPICAL?	Y

REV 01.24.11 4K 2TKGF.3

CIRCUIT MODIFICATIONS ARE NOT TO BE MADE WITHOUT AUTHORITY FROM THE OFFICE OF SIGNAL DESIGN

Date: 9/02/14
Des: DAS
Chk: CES
AFE: 23968

UNION PACIFIC RAILROAD
CHESTER, ILLINOIS
REMOTE LOCATION
CHESTER SUBDIVISION
Office of AVP Engineering - Signal Omaha, Nebraska

Sh.: 3
DOT 000000R
MP: 62.69
ID: 127506269.3X

127506269.3X 12/8/2014 8:53:23 AM

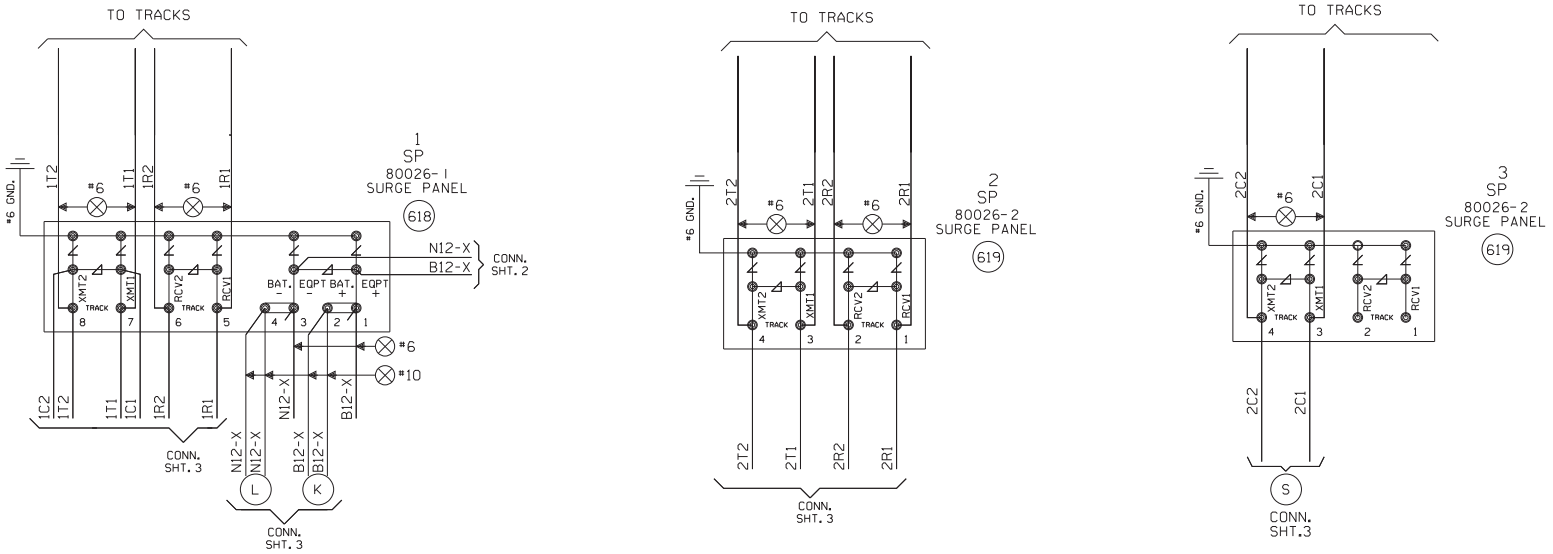

NEW SHEET

					Designed: 9/02/14 INSTALL FLASHERS GATES AND CWT AT M.P. 62.49 WATER STREET Rec#: WO#: 23968 IS: /CES /DAS/JTB	MODIFICATION LEVEL		CIRCUIT MODIFICATIONS ARE NOT TO BE MADE WITHOUT AUTHORITY FROM THE OFFICE OF SIGNAL DESIGN	Date: 9/02/14 Des: DAS Chk: CES AFE: 23968	UNION PACIFIC RAILROAD CHESTER, ILLINOIS REMOTE LOCATION CHESTER SUBDIVISION Office of AVP Engineering - Signal Omaha, Nebraska	Sh.: 4 DOT 000000R MP: 62.69 ID: 127506269.4X
						D. A. LAST LEVEL CHECKED	DU				
						LAST LEVEL MOD THIS TYPICAL	DU				
						LAST LEVEL BY DESIGNER	DU				
						CHANGED FROM TYPICAL? REV 01.24.11 4K REMOTE.4	Y				

127506269.4X 12/8/2014 8:53:25 AM

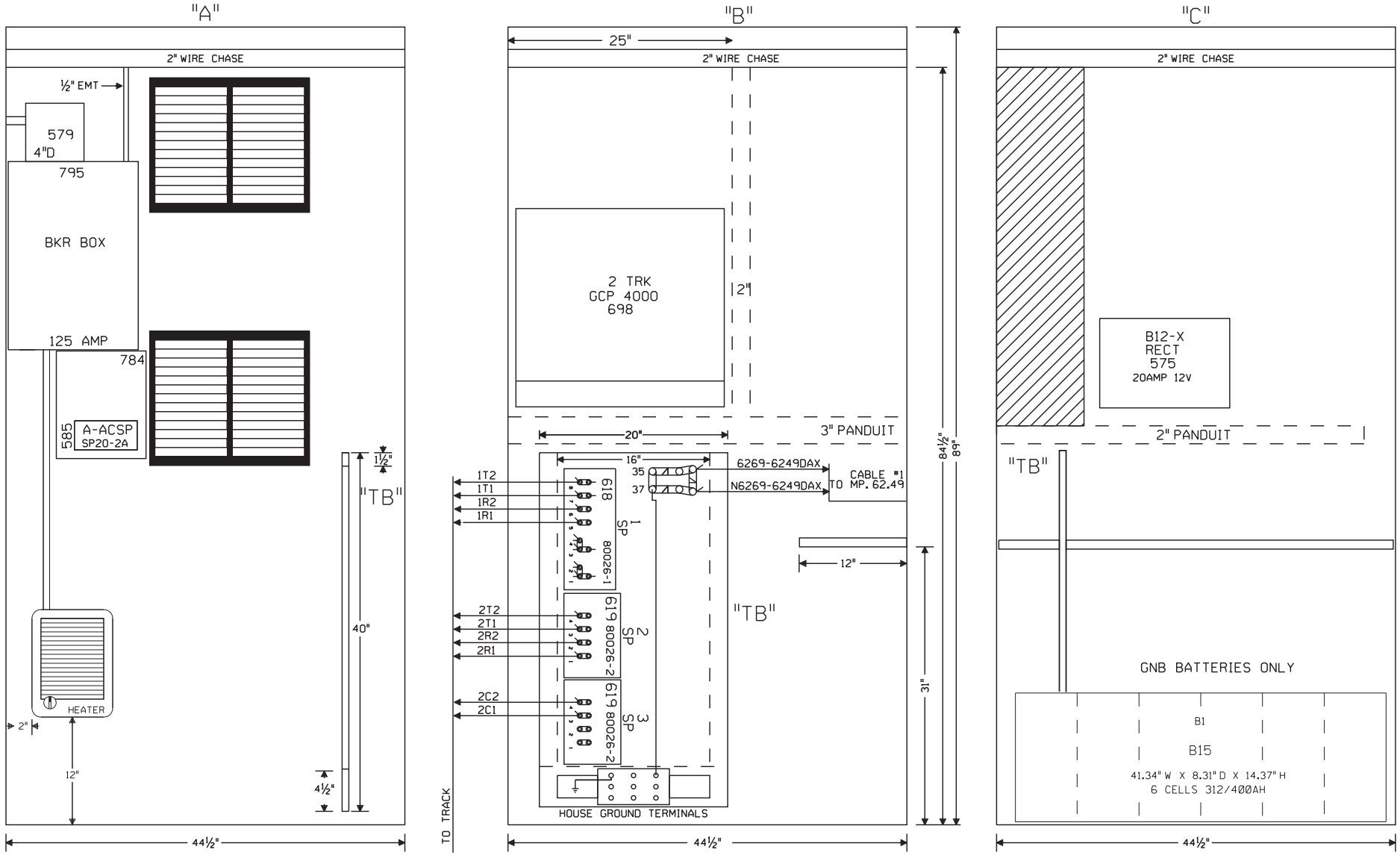

NOTE: ALL DIMENSIONS SHOWN ARE APPROXIMATE.

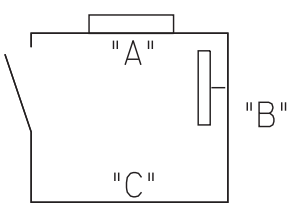

4X4 HOUSE WITH HEATER AND BLOWER U.P. PART#520-2528

NEW SHEET

Designed: 9/02/14
INSTALL FLASHERS GATES AND CWT AT M.P. 62.49 WATER STREET
Rec'd: IS:
WO#: 23968 /CES /DAS/JTB

MODIFICATION LEVEL	
Q.A. LAST LEVEL CHECKED	DU
LAST LEVEL MOD THIS TYPICAL	DU
LAST LEVEL BY DESIGNER	DU
CHANGED FROM TYPICAL?	Y

REV 01.24.11 4K REMOTE.5

CIRCUIT MODIFICATIONS ARE NOT TO BE MADE WITHOUT AUTHORITY FROM THE OFFICE OF SIGNAL DESIGN

Date:	9/02/14
Des:	DAS
Chk:	CES
AFE:	23968

UNION PACIFIC RAILROAD
CHESTER, ILLINOIS
REMOTE LOCATION
CHESTER SUBDIVISION
Office of AVP Engineering - Signal Omaha, Nebraska

Sh.:	5
DOT	000000R
MP:	62.69
ID:	127506269.5X

127506269.5X 12/8/2014 8:53:28 AM

Minimum Program Steps Report

Location and SIN

DOT Number: 436230H
Milepost Number: 62.49
Site Name: CHESTER, IL

SIN: 762010010016 *

* Parameter is part of office check number calculation.

MCF and Template Selection

MCF Name: GCP-T6X-02-4.mcf
MCF Revision: 24
MCFCRC: 09FC363B

Template = 1A:6 Trk Bi (OCCN) *

* Parameter is part of office check number calculation.

Minimum Program Steps

TEMPLATE: track 1-Bi, Island
Track 1 : GCP Frequency = 285 Hz (Field,TCN)
Track 1 : Approach Distance = 3492 ft (Set in Field,TCN)
Track 1 : Prime Warning Time = 29 sec (OCCN) *
Track 1 : Prime UAX = IP (OCCN) *
Track 1 : Prime UAX Pickup = 15 sec (OCCN) *
Track 1 : GCP Transmit Level = Medium (Set in Field,TCN)
Track 1 : Isl Frequency = 17.5 kHz (Set in Field)

TEMPLATE: AND 1 XR
AND 1 Enable Used = Yes (OCCN) *

TEMPLATE: SSCC
SSCC 1 : Lamp Neutral Test = Off (Set in Field)
SSCC 2 : Lamp Neutral Test = Off (Set in Field)

TEMPLATE: OOS
OOS Control = OOS IPs (OCCN) *

TEMPLATE: IP assignment 1
IN 1.1 = T1 Prime UAX (OCCN) *
IN 1.2 = Out Of Service IP 1 (OCCN) *

TEMPLATE: IP assignment SSCC
IN 7.1 = AND 1 XR Enable (OCCN) *

GCP: track 1
Track 1 : Island Distance = 148 ft (Set in Field,TCN)

ISLAND: track 1
Track 1 : Pickup Delay (2s +) = 2 sec (OCCN) *

ADVANCED: site options
Daylight Savings = Off (Set in Field)

* Parameter is part of office check number calculation.

Check Numbers

Office Check Number: 0C8C781B
Config. Check Number: 3FD7F258
(Based on MCF Revision 24)

Parameters not part of office check number calculation:

Track 1 : GCP Frequency = 285 Hz
Track 1 : Approach Distance = 3492 ft (Set in Field)
Track 1 : GCP Transmit Level = Medium (Set in Field)
Track 1 : Isl Frequency = 17.5 kHz
SSCC 1 : Lamp Neutral Test = Off (Set in Field)
SSCC 2 : Lamp Neutral Test = Off (Set in Field)
Track 1 : Island Distance = 148 ft (Set in Field)
Daylight Savings = Off (Set in Field)

Comments

<none>

Configuration Package File

Filename: 127506249-436230H.pac
Path: C:\Program Files (x86)\SAFETRAN\DT\MCF\EAU5498\
Date/Time: 10/22/2014 10:34:34

Minimum Program Steps Report

Location and SIN

DOT Number: 000000R
Milepost Number: 62.69
Site Name: CHESTER, ILLINOIS

SIN: 762010010016 *

* Parameter is part of office check number calculation.

MCF and Template Selection

MCF Name: GCP-T6X-02-4.mcf
MCF Revision: 24
MCFCRC: 09FC363B

Template = 4A:6 Remotes (OCCN) *

* Parameter is part of office check number calculation.

Minimum Program Steps

BASIC: module configuration
Track 2/RIO 1 Slot = Track (OCCN) *

GCP: track 1
Track 1 : GCP Frequency = 790 Hz (Set in Field,TCN)
Track 1 : Approach Distance = 360 ft (Set in Field,TCN)

GCP: track 1 Dax A
Track 1 : Dax A Warning Time = 29 sec (OCCN) *
Track 1 : Dax A Offset Distance = 1195 ft (Set in Field)

GCP: track 2
Track 2 : GCP Frequency = 285 Hz (Set in Field,TCN)
Track 2 : Approach Distance = 1937 ft (Set in Field,TCN)

GCP: track 2 Dax A
Track 2 : Dax A Warning Time = 29 sec (OCCN) *
Track 2 : Dax A Offset Distance = 1555 ft (Set in Field)

OUTPUT: assignment page 1
OUT 1.1 = AND 1 XR (OCCN) *

* Parameter is part of office check number calculation.

Check Numbers

Office Check Number: 02BEBF30
Config. Check Number: 7DF7AFE0
(Based on MCF Revision 24)

Parameters not part of office check number calculation:

Track 1 : GCP Frequency = 790 Hz (Set in Field)
Track 1 : Approach Distance = 360 ft (Set in Field)
Track 1 : Dax A Offset Distance = 1195 ft (Set in Field)
Track 2 : GCP Frequency = 285 Hz (Set in Field)
Track 2 : Approach Distance = 1937 ft (Set in Field)
Track 2 : Dax A Offset Distance = 1555 ft (Set in Field)

```
Comments
--------
<none>

Configuration Package File
--------------------------
Filename: 127506269-000000R.pac
Path: C:\Users\ODDE267\Desktop\
Date/Time: 1/16/2015 8:39:13
DT Version: 5.7.3
```