PRIME WARNING TIME = 26 SECONDS

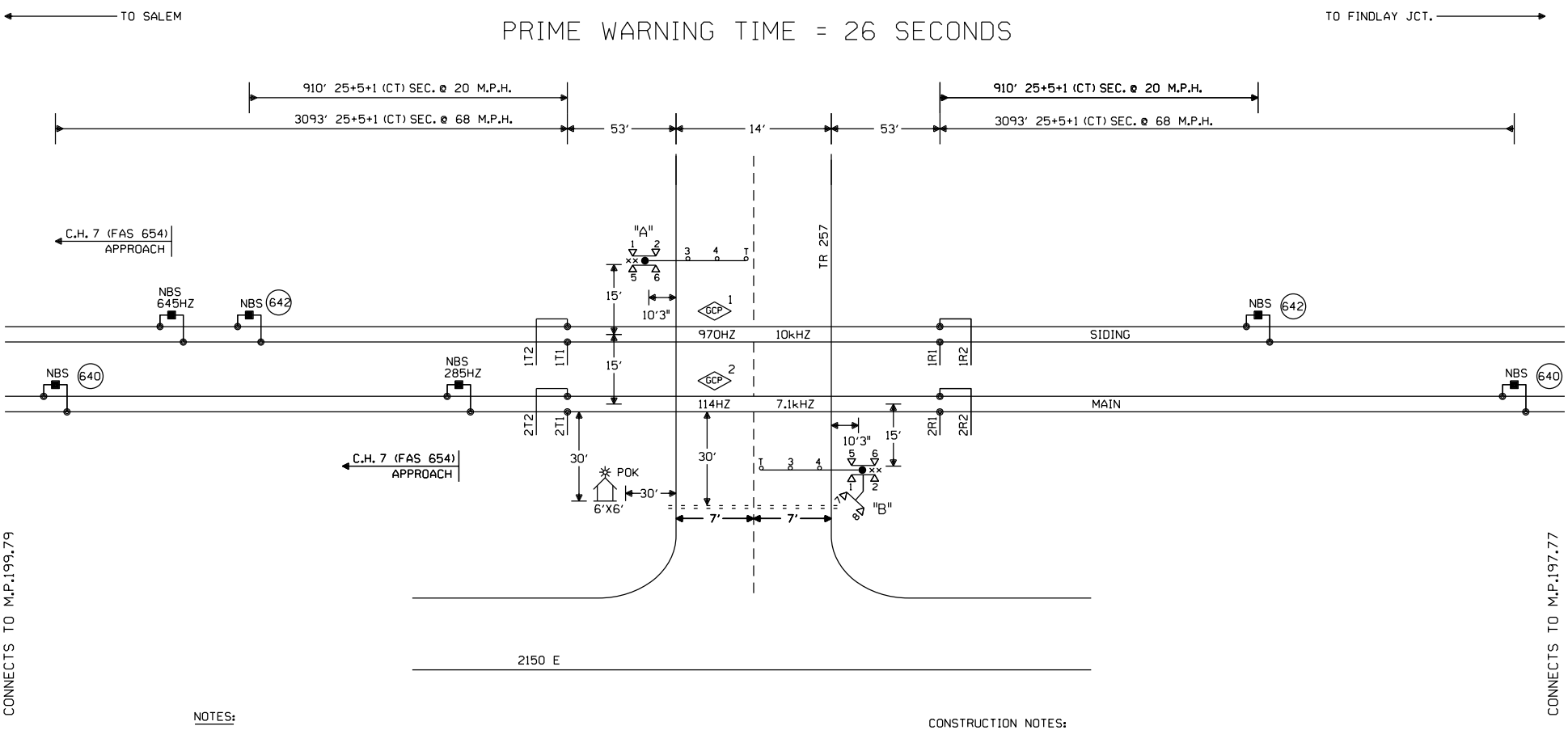

NOTES:

⊗ = TWISTED WIRES
INSULATED 1 TWIST PER FT.
ALL TRACK WIRES 2C. #6

TRANSMITTER AND RECEIVER LEADS TO BE SEPARATED BY AT LEAST 12" IN TRENCH, LENGTHS SHOULD NOT EXCEED MANUFACTURES RECOMMENDATION.

TOP OF FOUNDATION TO BE AT SAME ELEVATION AS THE SURFACE OF THE TRAVELED WAY & NO MORE THAN 4" ABOVE THE SURFACE OF THE GROUND.

ALL BUNGALOW WIRING TO BE #16 AWG FLEX UNLESS OTHERWISE SPECIFIED EXCEPT ALL GROUND WIRE TO BE #6 AWG FLEX OR LARGER.

ALL WIRING IN GATE MECHANISM TO BE #10 "AWG FLEX".

REFER TO UP STANDARD DWG FOR BUNGALOW GROUNDING.

PORTABLE GENERATOR EXTENSION CORD FOR 240V TO 240V IS PROVIDED AS WELL AS A 120V TO 240V ADAPTER.

ALL LIGHTS TO BE 12" ROUNDELS.

= = = = = = 4" X 30' CONDUIT

LIGHTS: LED LIGHTS

GATE A: 17'
GATE B: 17'

xx = BELL

W(S) ←—○—→ E(N)

CONSTRUCTION NOTES:

1. EXTEND ISLAND WIRES TO 53' TO ACCOMODATE 120' ISLAND LENGTH.
2. CABIN PLACEMENT TO BE VERIFIED BY ICC.

NEW SHEET

Designed: 06/17/14
INSTALL FLASHERS, GATES, AND CWT AT M.P. 199.16 TR 257
PID: 87036 WO#: 25082
IS: / CES
Rec#: / CAM / JTB

MODIFICATION LEVEL	
Q. A. LAST LEVEL CHECKED	DU
LAST LEVEL MOD THIS TYPICAL	DU
LAST LEVEL BY DESIGNER	DU
CHANGED FROM TYPICAL?	Y

REV 01.24.11 4K 1TKBG.1

CIRCUIT MODIFICATIONS ARE NOT TO BE MADE WITHOUT AUTHORITY FROM THE OFFICE OF SIGNAL DESIGN

Date: 06/17/14
Des: CAM Chk: CES
PID: 87036
AFE: 25082

UNION PACIFIC RAILROAD
SHELBYVILLE, ILLINOIS
TR 257
SALEM SUBDIVISION
Office of AVP Engineering - Signal Omaha, Nebraska

Sh.: 1
DOT 167866A
MP: 199.16
ID: 030119916.1X

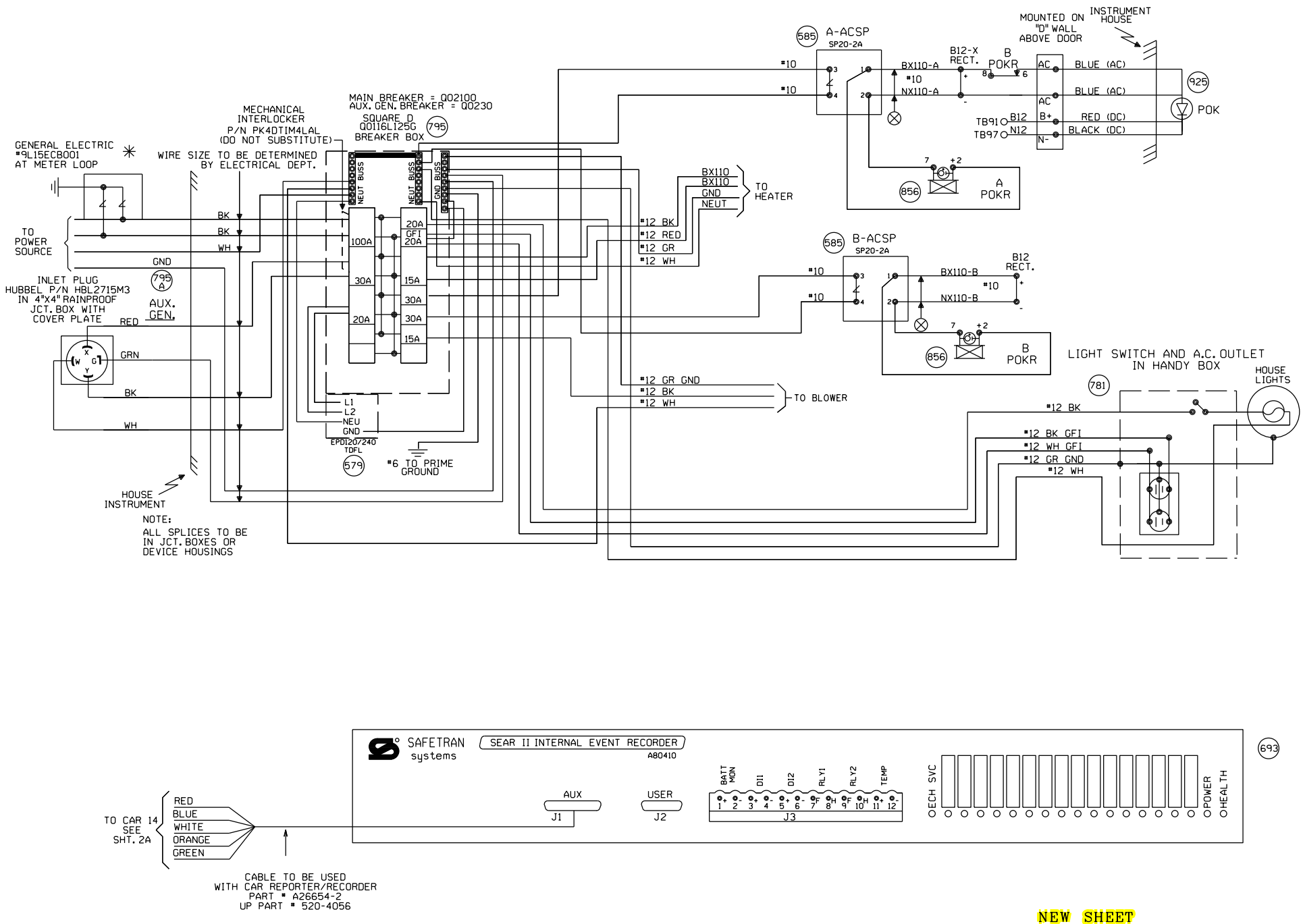

NEW SHEET

Designed: 06/17/14 INSTALL FLASHERS, GATES, AND CWT AT M.P. 199.16 TR 257 PID: 87036 WO#: 25082 IS: CES Rec#: CAM JTB	MODIFICATION LEVEL		CIRCUIT MODIFICATIONS ARE NOT TO BE MADE WITHOUT AUTHORITY FROM THE OFFICE OF SIGNAL DESIGN	Date: 06/17/14 Des: CAM Chk: CES PID: 87036 AFE: 25082	UNION PACIFIC RAILROAD SHELBYVILLE, ILLINOIS TR 257 SALEM SUBDIVISION Office of AVP Engineering - Signal Omaha, Nebraska	Sh.: 2 DOT 167866A MP: 199.16 ID: 030119916.2X
	O.A. LAST LEVEL CHECKED	DU				
	LAST LEVEL MOD THIS TYPICAL	DU				
	LAST LEVEL BY DESIGNER	DU				
	CHANGED FROM TYPICAL?	Y				
	REV 01.24.11 4K SEARAC.2					

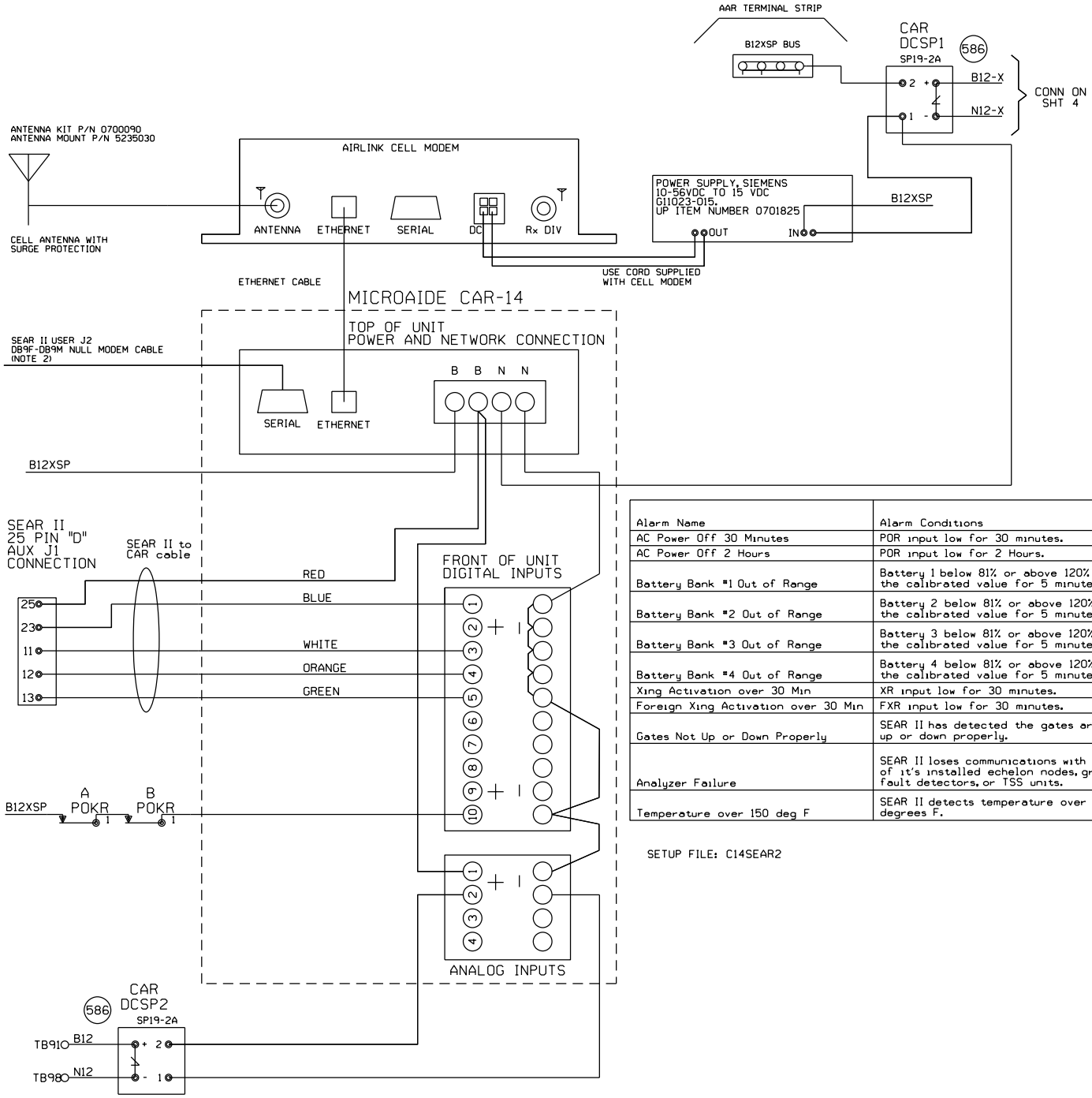

NOTE:
1) DO NOT JUMPER UNUSED INPUTS
2) THE CAR14 SERIAL PORT IS AVAILABLE TO ADD REMOTE CONNECTIVITY TO EXISTING LOGGING EQUIPMENT. USE NULL MODEM CABLE WITH SHIELDING DISCONNECTED AT ONE OR BOTH SIDES.

ANALOG INPUTS:
A1) B12X BATTERY BANK
A2) B12 BATTERY BANK
A3) BATTERY BANK 3
A4) BATTERY BANK 4

DIGITAL INPUTS
D1) XR (BLUE WIRE)
D2) FOREIGN XR
D3) ANALYZER FAILURE (WHITE WIRE)
D4) HIGH TEMPERATURE (ORANGE WIRE)
D5) GATES NOT UP OR DOWN PROPERLY (GREEN WIRE)
D10) POWER OFF INDICATION

Alarm Name	Alarm Conditions	Alarm Clearing Conditions	Cleared by Maintainer Mode?
AC Power Off 30 Minutes	POR input low for 30 minutes.	POR input high for 5 minutes.	No
AC Power Off 2 Hours	POR input low for 2 Hours.	POR input high for 5 minutes.	No
Battery Bank #1 Out of Range	Battery 1 below 81% or above 120% of the calibrated value for 5 minutes.	Battery 1 within acceptable range for 5 minutes.	No
Battery Bank #2 Out of Range	Battery 2 below 81% or above 120% of the calibrated value for 5 minutes.	Battery 2 within acceptable range for 5 minutes.	No
Battery Bank #3 Out of Range	Battery 3 below 81% or above 120% of the calibrated value for 5 minutes.	Battery 3 within acceptable range for 5 minutes.	No
Battery Bank #4 Out of Range	Battery 4 below 81% or above 120% of the calibrated value for 5 minutes.	Battery 4 within acceptable range for 5 minutes.	No
Xing Activation over 30 Min	XR input low for 30 minutes.	XR input high for 10 seconds.	Yes
Foreign Xing Activation over 30 Min	FXR input low for 30 minutes.	FXR input high for 10 seconds.	Yes
Gates Not Up or Down Properly	SEAR II has detected the gates are not up or down properly.	SEAR II has detected the gates are up or down properly.	No
Analyzer Failure	SEAR II loses communications with any of it's installed echelon nodes, ground fault detectors, or TSS units.	SEAR II has recovered after an analyzer failure alarm.	No
Temperature over 150 deg F	SEAR II detects temperature over 150 degrees F.	SEAR II sensor detects temperature is OK after a High-Temp alarm.	No

SETUP FILE: C14SEAR2

NEW SHEET

Designed: 06/17/14
INSTALL FLASHERS, GATES, AND CWT AT M.P. 199.16 TR 257
PID: 87036 WO#: 25082 ISs: / CES Rec's: / CAM / JTB
rev 01.24.11 4K ACDCCAR14SII.3

MODIFICATION LEVEL	
O. A. LAST LEVEL CHECKED	DU
LAST LEVEL MOD THIS TYPICAL	DU
LAST LEVEL BY DESIGNER	DU
CHANGED FROM TYPICAL?	Y

CIRCUIT MODIFICATIONS ARE NOT TO BE MADE WITHOUT AUTHORITY FROM THE OFFICE OF SIGNAL DESIGN

Date: 06/17/14
Des: CAM Chk: CES
PID: 87036
AFE: 25082

UNION PACIFIC RAILROAD
SHELBYVILLE, ILLINOIS
TR 257
SALEM SUBDIVISION
Office of AVP Engineering - Signal Omaha, Nebraska

Sh.: 2A
DOT 167866A
MP: 199.16
ID: 030119916.2AX

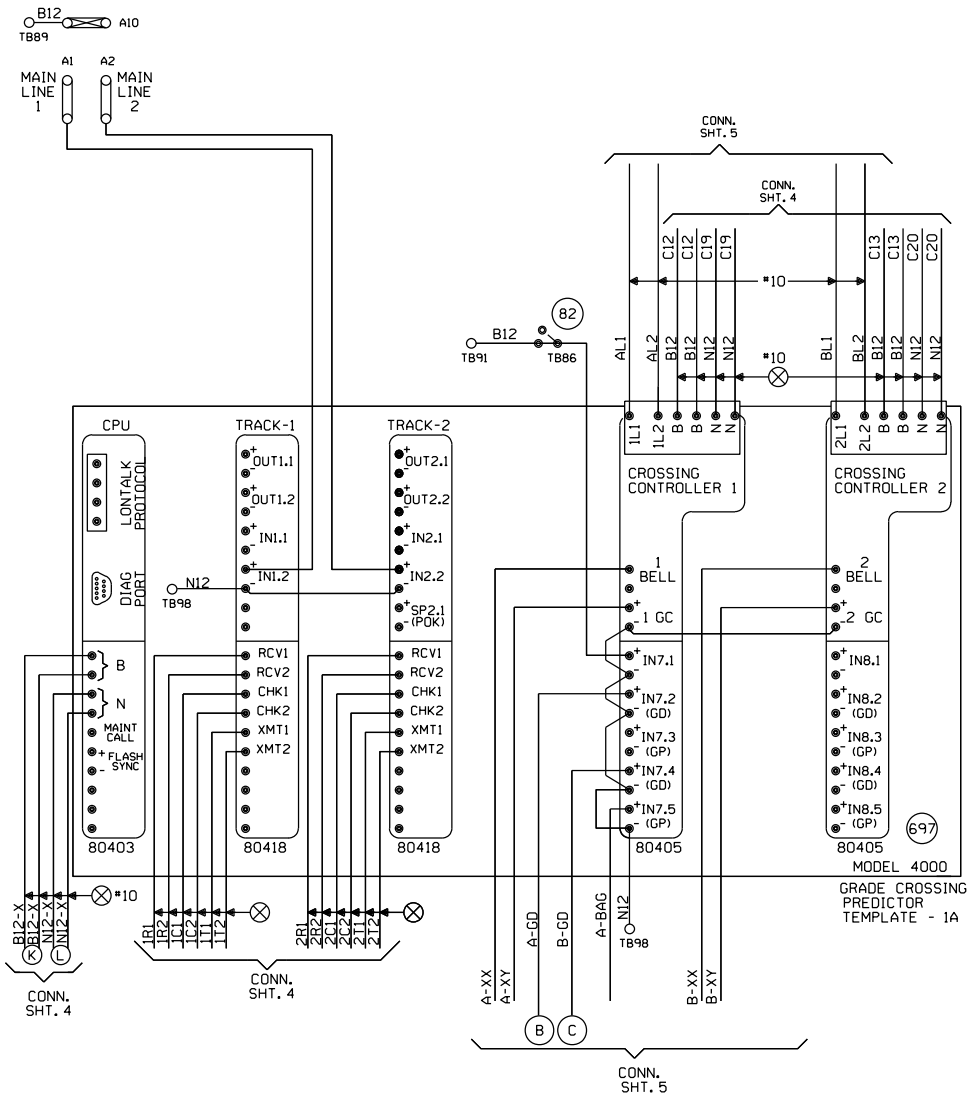

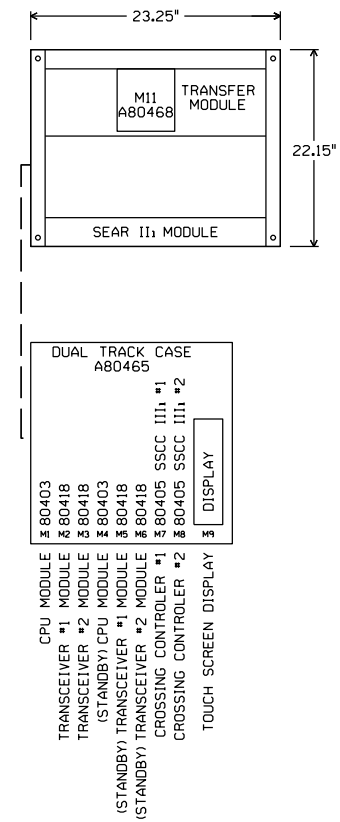

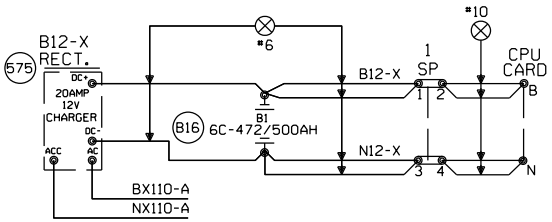

"Mf" FREQUENCY (HZ)	MAXIMUM TRANSMIT WIRE LENGTH (FEET)
86	100
114	125
156	150
211	200
285-970	250

NOTE:
EACH TRANSMITTER TO RAIL WIRE FROM XMT1 AND XMT2 MUST NOT EXCEED THE MAXIMUM LENGTH SPECIFIED IN THE TABLE SHOWN. THE RECEIVER WIRE LENGTH IS NOT CRITICAL. DOES NOT APPLY TO 6 TRACK WIRE APPLICATION.

NEW SHEET

Designed: 06/17/14
INSTALL FLASHERS, GATES, AND CWT AT M.P. 199.16 TR 257
PID: 87036 WO#: 25082
IS: / CES
Rec#: / CAM / JTB

MODIFICATION LEVEL	
Q. A. LAST LEVEL CHECKED	DU
LAST LEVEL MOD THIS TYPICAL	DU
LAST LEVEL BY DESIGNER	DU
CHANGED FROM TYPICAL?	Y

REV 01.24.11 4K 2TKGF.3

CIRCUIT MODIFICATIONS ARE NOT TO BE MADE WITHOUT AUTHORITY FROM THE OFFICE OF SIGNAL DESIGN

Date: 06/17/14
Des: CAM Chk: CES
PID: 87036
AFE: 25082

UNION PACIFIC RAILROAD
SHELBYVILLE, ILLINOIS
TR 257
SALEM SUBDIVISION
Office of AVP Engineering - Signal Omaha, Nebraska

Sh.: 3
DOT 167866A
MP: 199.16
ID: 030119916.3X

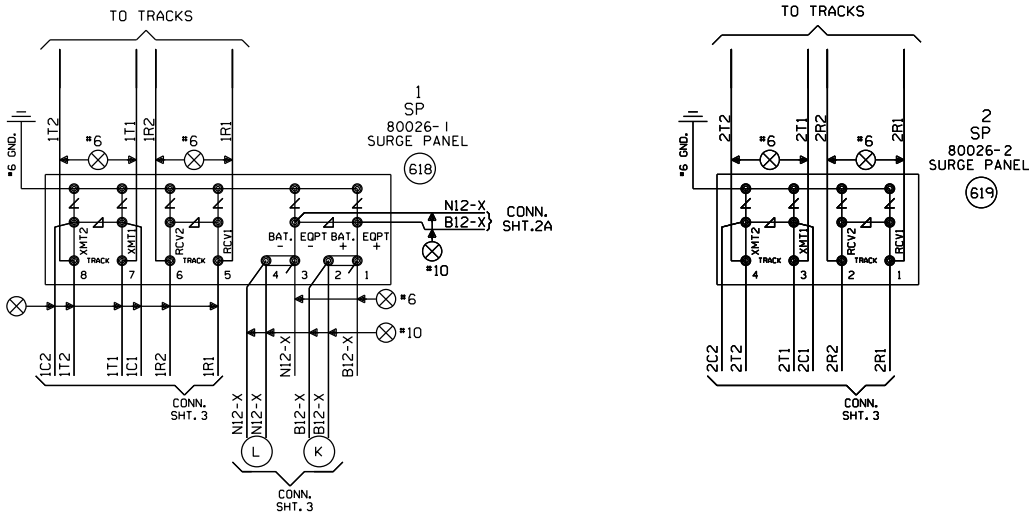

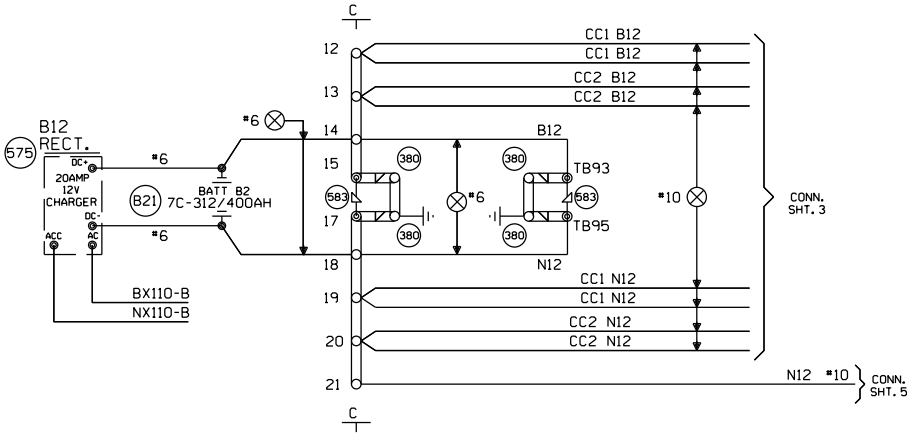

NEW SHEET

Designed: 06/17/14 INSTALL FLASHERS, GATES, AND CWT AT M.P. 199.16 TR 257 PID: 87036 WO#: 25082 IS: / CES Rec#: / CAM / JTB	MODIFICATION LEVEL		CIRCUIT MODIFICATIONS ARE NOT TO BE MADE WITHOUT AUTHORITY FROM THE OFFICE OF SIGNAL DESIGN	Date: 06/17/14 Des: CAM Chk: CES PID: 87036 AFE: 25082	UNION PACIFIC RAILROAD SHELBYVILLE, ILLINOIS TR 257 SALEM SUBDIVISION Office of AVP Engineering - Signal Omaha, Nebraska	Sh.: 4 DOT 167866A MP: 199.16 ID: 030119916.4X
	Q. A. LAST LEVEL CHECKED	DU				
	LAST LEVEL MOD THIS TYPICAL	DU				
	LAST LEVEL BY DESIGNER	DU				
	CHANGED FROM TYPICAL?	Y				
	REV 01.24.11 4K 4TKSPGFC.4					

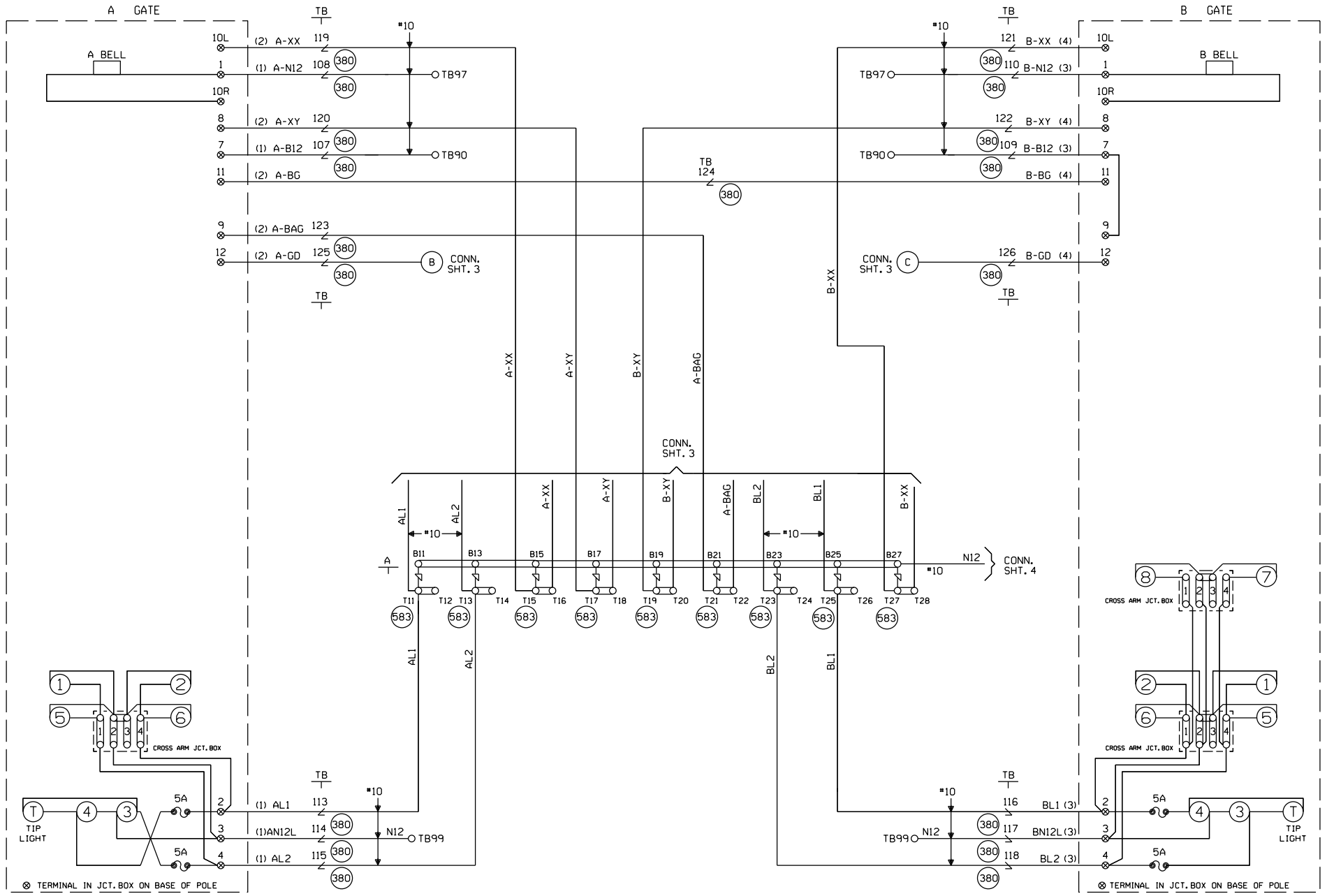

CABLE TABULATION

CABLE NO. 1 5C. NO.6 U.G.B.T. TO GATE A
CABLE NO. 2 7C. NO.14 U.G.B.T. TO GATE A
CABLE NO. 3 5C. NO.6 U.G.B.T. TO GATE B
CABLE NO. 4 7C. NO.14 U.G.B.T. TO GATE B

NEW SHEET

Designed: 06/17/14
INSTALL FLASHERS, GATES, AND CWT AT M.P. 199.16 TR 257
PID: 87036 WO#: 25082
IS: CES
Rec#: CAM JTB

MODIFICATION LEVEL	
Q. A. LAST LEVEL CHECKED	DU
LAST LEVEL MOD THIS TYPICAL	DU
LAST LEVEL BY DESIGNER	DU
CHANGED FROM TYPICAL?	Y

REV 01.24.11 4K GFSLTYP.5

CIRCUIT MODIFICATIONS ARE NOT TO BE MADE WITHOUT AUTHORITY FROM THE OFFICE OF SIGNAL DESIGN

Date: 06/17/14
Des: CAM Chk: CES
PID: 87036
AFE: 25082

UNION PACIFIC RAILROAD
SHELBYVILLE, ILLINOIS
TR 257
SALEM SUBDIVISION
Office of AVP Engineering - Signal Omaha, Nebraska

Sh.: 5
DOT 167866A
MP: 199.16
ID: 030119916.5X

WCH 3593-E

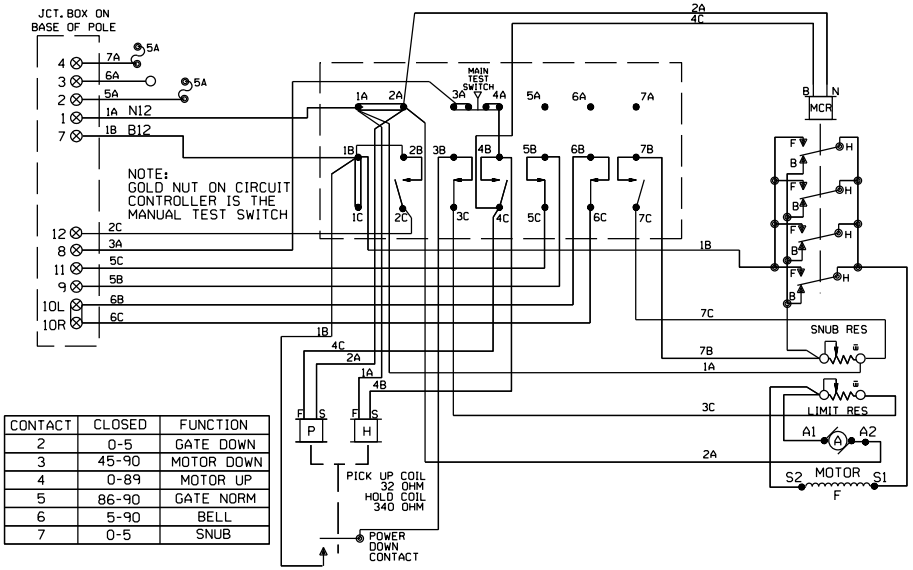

CONTACT	CLOSED	FUNCTION
2	0-5	GATE DOWN
3	45-90	MOTOR DOWN
4	0-89	MOTOR UP
5	86-90	GATE NORM
6	5-90	BELL
7	0-5	SNUB

WCH 3597-E

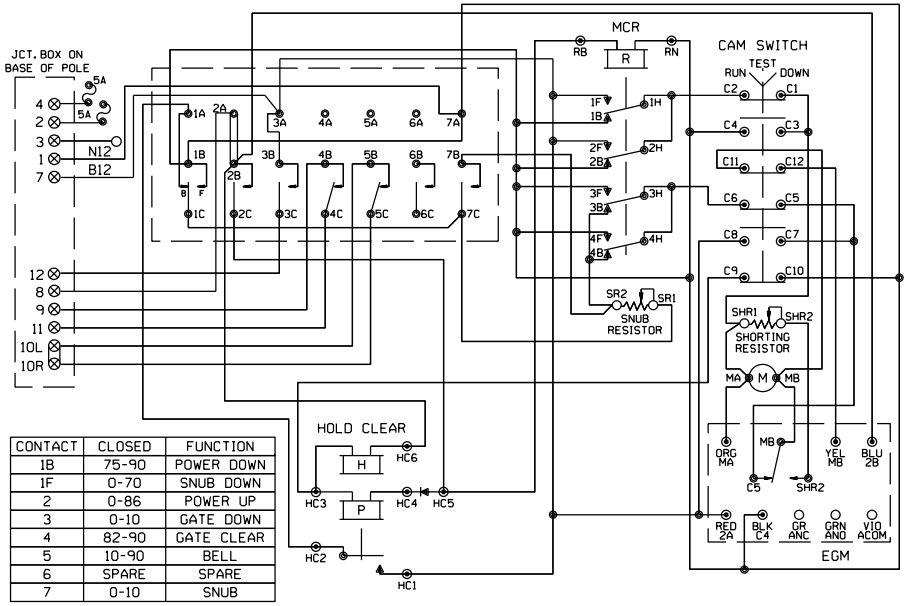

CONTACT	CLOSED	FUNCTION
1B	75-90	POWER DOWN
1F	0-70	SNUB DOWN
2	0-86	POWER UP
3	0-10	GATE DOWN
4	82-90	GATE CLEAR
5	10-90	BELL
6	SPARE	SPARE
7	0-10	SNUB

WCH 3597-RB

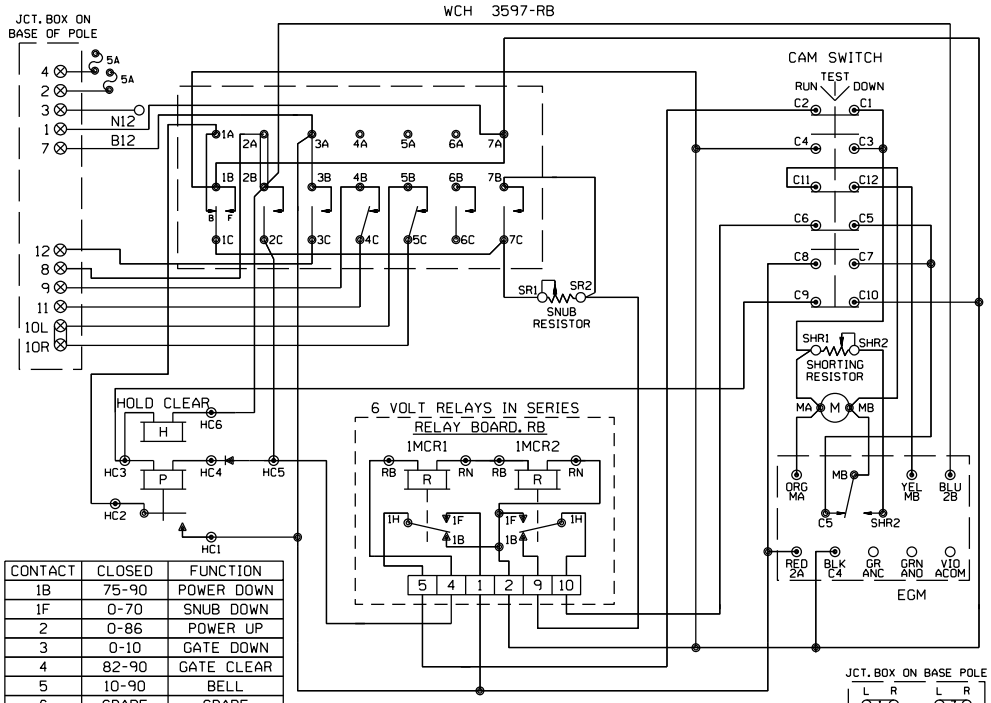

CONTACT	CLOSED	FUNCTION
1B	75-90	POWER DOWN
1F	0-70	SNUB DOWN
2	0-86	POWER UP
3	0-10	GATE DOWN
4	82-90	GATE CLEAR
5	10-90	BELL
6	SPARE	SPARE
7	0-10	SNUB

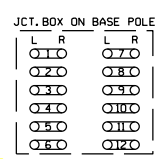

SHOW TYPE MECH. INSTALLED

ALL MECHANISMS SHOWN IN THE CLEAR POSITION

SAFETRAN S-60

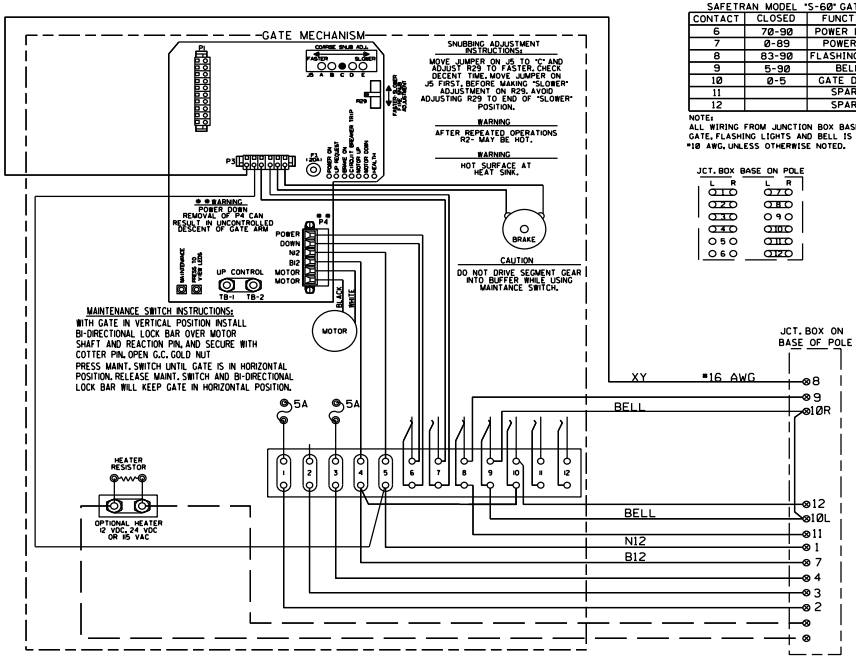

SAFETRAN MODEL "S-60" GATE

CONTACT	CLOSED	FUNCTION
6	70-90	POWER DOWN
7	0-89	POWER UP
8	83-90	FLASHING LGT.
9	5-90	BELL
10	0-5	GATE DOWN
11		SPARE
12		SPARE

NOTE:
ALL WIRING FROM JUNCTION BOX BASE TO GATE, FLASHING LIGHTS AND BELL IS TO BE #10 AWG, UNLESS OTHERWISE NOTED.

NEW SHEET

Designed: 06/17/14
INSTALL FLASHERS, GATES, AND CWT AT M.P. 199.16 TR 257
PID: 87036 WO#: 25082
IS: CES
Rec#: CAM JTB

MODIFICATION LEVEL	
Q. A. LAST LEVEL CHECKED	DU
LAST LEVEL MOD THIS TYPICAL	DU
LAST LEVEL BY DESIGNER	DU
CHANGED FROM TYPICAL?	N

REV 01.24.11 4K GWIRING.7

CIRCUIT MODIFICATIONS ARE NOT TO BE MADE WITHOUT AUTHORITY FROM THE OFFICE OF SIGNAL DESIGN

Date: 06/17/14
Des: CAM Chk: CES
PID: 87036
AFE: 25082

UNION PACIFIC RAILROAD

SHELBYVILLE, ILLINOIS
TR 257
SALEM SUBDIVISION

Office of AVP Engineering - Signal Omaha, Nebraska

Sh.: 6
DOT 167866A
MP: 199.16
ID: 030119916.6X

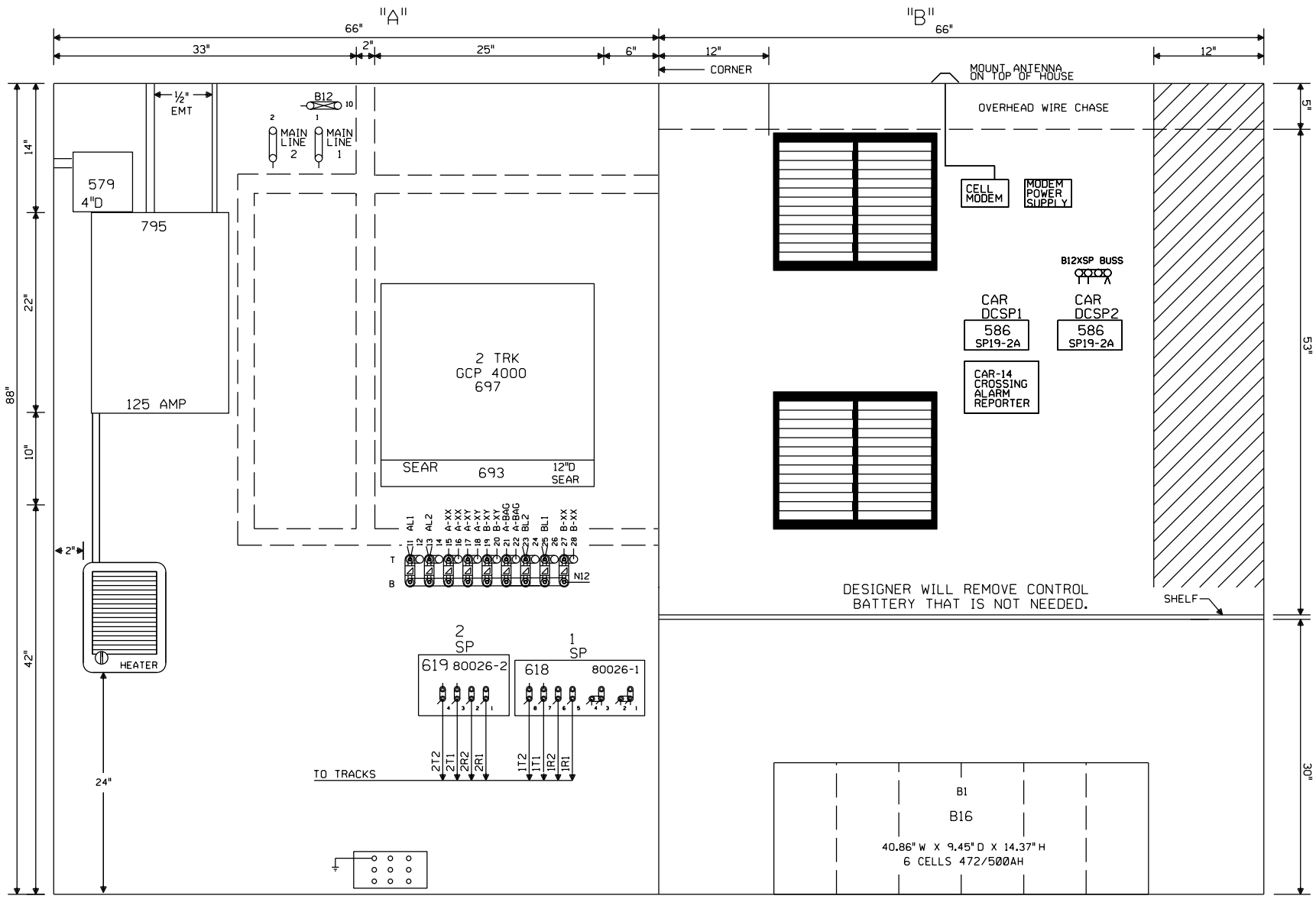

6X6 HOUSE WITH HEATER AND BLOWER & TIB U.P. PART#520-2530

NOTE: ALL DIMENSIONS SHOWN ARE APPROXIMATE.

NEW SHEET

Designed: 06/17/14
INSTALL FLASHERS, GATES, AND CWT AT M.P. 199.16 TR 257
PID: 87036 WO#: 25082
IS: CES
Rec#: CAM/JTB

MODIFICATION LEVEL	
Q. A. LAST LEVEL CHECKED	DU
LAST LEVEL MOD THIS TYPICAL	DU
LAST LEVEL BY DESIGNER	DU
CHANGED FROM TYPICAL?	Y

REV 01.24.11 4K 4TKGFC.8

CIRCUIT MODIFICATIONS ARE NOT TO BE MADE WITHOUT AUTHORITY FROM THE OFFICE OF SIGNAL DESIGN

Date: 06/17/14
Des: CAM Chk: CES
PID: 87036
AFE: 25082

UNION PACIFIC RAILROAD
SHELBYVILLE, ILLINOIS
TR 257
SALEM SUBDIVISION
Office of AVP Engineering - Signal Omaha, Nebraska

Sh.: 7
DOT 167866A
MP: 199.16
ID: 030119916.7X

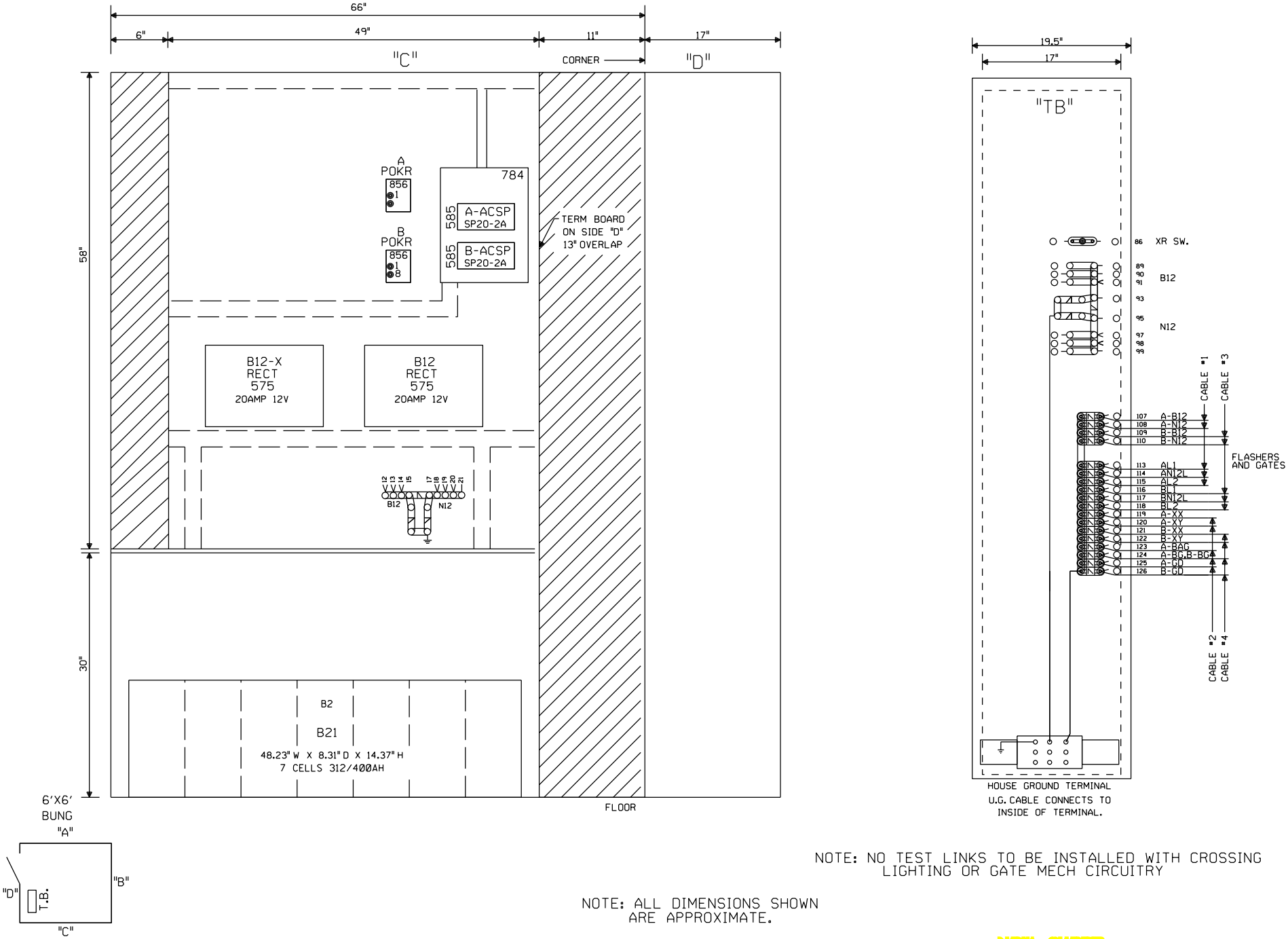

NOTE: NO TEST LINKS TO BE INSTALLED WITH CROSSING LIGHTING OR GATE MECH CIRCUITRY

NOTE: ALL DIMENSIONS SHOWN ARE APPROXIMATE.

NEW SHEET

Designed: 06/17/14
INSTALL FLASHERS, GATES, AND CWT AT M.P. 199.16 TR 257
PID: 87036 WO#: 25082
IS: CES
Rec#: CAM JTB

MODIFICATION LEVEL	
Q. A. LAST LEVEL CHECKED	DU
LAST LEVEL MOD THIS TYPICAL	DU
LAST LEVEL BY DESIGNER	DU
CHANGED FROM TYPICAL?	Y

REV 01.24.11 4K GFC.9

CIRCUIT MODIFICATIONS ARE NOT TO BE MADE WITHOUT AUTHORITY FROM THE OFFICE OF SIGNAL DESIGN

Date: 06/17/14
Des: CAM Chk: CES
PID: 87036
AFE: 25082

UNION PACIFIC RAILROAD
SHELBYVILLE, ILLINOIS
TR 257
SALEM SUBDIVISION
Office of AVP Engineering - Signal Omaha, Nebraska

Sh.: 8
DOT 167866A
MP: 199.16
ID: 030119916.8X

Minimum Program Steps Report

Location and SIN

DOT Number: 167866A
Milepost Number: 199.16
Site Name: SHELBYVILLE, IL
SIN: 762010010016 *
* Parameter is part of office check number calculation.
MCF and Template Selection

MCF Name: GCP-T6X-02-4.mcf
MCF Revision: 24
MCFCRC: 09FC363B
Template = 1A:6 Trk Bi (OCCN) *
* Parameter is part of office check number calculation.
Minimum Program Steps

TEMPLATE: module configuration
Track 2/RIO 1 Slot = Track (OCCN) *
TEMPLATE: track 1-Bi, Island
Track 1 : GCP Frequency = 970 Hz (Field,TCN)
Track 1 : Approach Distance = 910 ft (Set in Field,TCN)
Track 1 : Prime Warning Time = 26 sec (OCCN) *
Track 1 : GCP Transmit Level = Medium (Set in Field,TCN)
Track 1 : Isl Frequency = 10.0 kHz (Set in Field)
TEMPLATE: track 2-Bi, Island
Track 2 : GCP Frequency = 114 Hz (Field,TCN)
Track 2 : Approach Distance = 3093 ft (Set in Field,TCN)
Track 2 : Prime Warning Time = 26 sec (OCCN) *
Track 2 : GCP Transmit Level = Medium (Set in Field,TCN)
Track 2 : Isl Frequency = 7.1 kHz (Set in Field)
TEMPLATE: AND 1 XR
AND 1 Enable Used = Yes (OCCN) *
TEMPLATE: SSCC
SSCC 1 : Lamp Neutral Test = Off (Set in Field)
SSCC 2 : Lamp Neutral Test = Off (Set in Field)
TEMPLATE: OOS
OOS Control = OOS IPs (OCCN) *
TEMPLATE: IP assignment 1

IN 1.2 = Out Of Service IP 1 (OCCN) *
IN 2.2 = Out Of Service IP 2 (OCCN) *
TEMPLATE: IP assignment SSCC
IN 7.1 = AND 1 XR Enable (OCCN) *
GCP: track 1
Track 1 : Island Distance = 120 ft (Set in Field,TCN)

GCP: track 2
Track 2 : Island Distance = 120 ft (Set in Field,TCN)
ISLAND: track 1
Track 1 : Pickup Delay (2s +) = 2 sec (OCCN) *
ISLAND: track 2
Track 2 : Pickup Delay (2s +) = 2 sec (OCCN) *
ADVANCED: site options
Daylight Savings = Off (Set in Field)
* Parameter is part of office check number calculation.
Check Numbers

Office Check Number: 126A137D
Config. Check Number: 6B1BAE84
(Based on MCF Revision 24)
Parameters not part of office check number calculation:
Track 1 : GCP Frequency = 970 Hz
Track 1 : Approach Distance = 910 ft (Set in Field)
Track 1 : GCP Transmit Level = Medium (Set in Field)
Track 1 : Isl Frequency = 10.0 kHz
Track 2 : GCP Frequency = 114 Hz
Track 2 : Approach Distance = 3093 ft (Set in Field)
Track 2 : GCP Transmit Level = Medium (Set in Field)
Track 2 : Isl Frequency = 7.1 kHz
SSCC 1 : Lamp Neutral Test = Off (Set in Field)
SSCC 2 : Lamp Neutral Test = Off (Set in Field)
Track 1 : Island Distance = 120 ft (Set in Field)
Track 2 : Island Distance = 120 ft (Set in Field)
Daylight Savings = Off (Set in Field)
Comments

Configuration Package File

Filename: 030119916_167866A.pac
Path: P:\DRAWINGS\UPRR Design\WO 25082 - TR 257\01 Crossing Design\
Date/Time: 8/26/2014 16:16:35

DT Version: 5.3.3

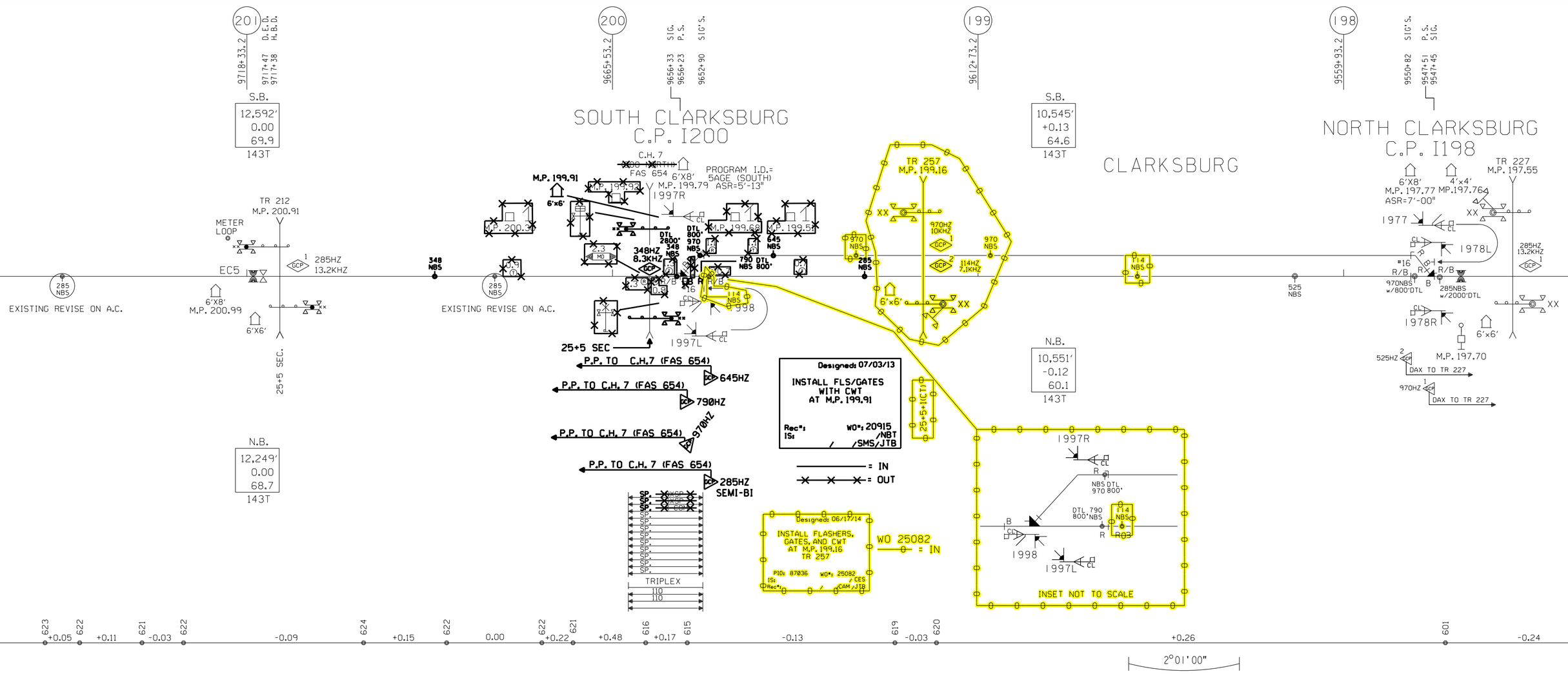
201
9718+33.2
D.E.D.
H.B.D.
9717+47
9717+38
S.B.
12,592'
0.00
69.9
143T
N.B.
12,249'
0.00
68.7
143T
200
9665+53.2
9656+33
9656+23
9652+90
SIG.
P.S.
SIG'S.
SOUTH CLARKSBURG
C.P. I200
C.H. 7
FAS 654
6'X8'
M.P. 199.79
ASR=5'-13"
PROGRAM I.D.=
5AGE (SOUTH)
M.P. 199.91
6'x6'
M.P. 199.93
1997R
M.P. 200.3
M.P. 199.68
M.P. 199.54
DTL
2800'
348
NBS
DTL
800'
970
NBS
645
NBS
348HZ
8.3KHZ
790 DTL
NBS 800'
I14
NBS
0.998
1997L
25+5 SEC
P.P. TO C.H.7 (FAS 654)
645HZ
P.P. TO C.H. 7 (FAS 654)
790HZ
P.P. TO C.H. 7 (FAS 654)
970HZ
P.P. TO C.H. 7 (FAS 654)
285HZ
SEMI-BI
TRIPLEX
110
110
TR 212
M.P. 200.91
METER
LOOP
EC5
285HZ
13.2KHZ
6'X8'
M.P. 200.99
6'X6'
25+5 SEC.
285
NBS
EXISTING REVISE ON A.C.
348
NBS
EXISTING REVISE ON A.C.
Designed: 07/03/13
INSTALL FLS/GATES
WITH CWT
AT M.P. 199.91
Rec#:
IS:
WO#: 20915
/NBT
/SMS/JTB
= IN
= OUT
Designed: 06/17/14
INSTALL FLASHERS,
GATES, AND CWT
AT M.P. 199.16
TR 257
P10: 87036
WO#: 25082
/CES
/CAM/JTB
WO 25082
= IN
TR 257
M.P. 199.16
970HZ
10KHZ
970
NBS
114HZ
7.1KHZ
6'x6'
25+5 (CT)
I14
NBS
525
NBS
CLARKSBURG
S.B.
10,545'
+0.13
64.6
143T
N.B.
10,551'
-0.12
60.1
143T
1997R
NBS DTL
970 800'
DTL 790
800'NBS
I14
NBS
R03
1998
1997L
INSET NOT TO SCALE
199
9612+73.2
198
9559+93.2
9550+82
9547+51
9547+45
SIG'S.
P.S.
SIG.
NORTH CLARKSBURG
C.P. I198
6'X8'
M.P. 197.77
ASR=7'-00"
4'x4'
MP.197.76
TR 227
M.P. 197.55
1977
1978L
#16
R/B
970NBS
w/800'DTL
285NBS
w/2000'DTL
285HZ
13.2KHZ
1978R
6'x6'
525HZ
M.P. 197.70
DAX TO TR 227
970HZ
DAX TO TR 227
623
+0.05
622
+0.11
621
-0.03
622
-0.09
624
+0.15
622
0.00
622
+0.22
621
+0.48
616
+0.17
615
-0.13
619
-0.03
620
+0.26
601
-0.24
2°01'00"