STATE OF ILLINOIS
ILLINOIS COMMERCE COMMISSION

BNSF RAILWAY COMPANY,	)	
	)	
Petitioner,	)	
v.	)	**Case No. T14-0150**
	)	
STATE OF ILLINOIS, DEPARTMENT	)	
OF TRANSPORTATION, AND	)	
COUNTY OF FULTON, ILLINOIS,	)	
	)	
Respondents.	)	

Petition for an Order of the Illinois Commerce Commission authorizing the installation of an additional railroad track at the grade crossing inventoried as DOT #078 455 Y (M.P. 142.62) at what is commonly known as CR 13 near Vermont, IL and for determination of suitable and appropriate warning and traffic devices at or near the crossing.

AMENDED PETITION

TO THE ILLINOIS COMMERCE COMMISSION:

NOW COMES Petitioner, BNSF Railway Company (BNSF), by its attorneys, Daley Mohan Groble, P.C., and respectfully petitions the Illinois Commerce Commission in this Petition, as follows:

1. That Petitioner is a railway company which operates trains over its single mainline railroad track which runs, by compass direction, generally in a north/south direction near and through the City of Vermont, Fulton County, Illinois.

2. The Respondent, State of Illinois, Department of Transportation, is a Department of the State of Illinois which exists by virtue of the laws of the State of Illinois;

3. The Respondent, County of Fulton, is a political subdivision of the State of Illinois.

4. The County Road, CR 13, runs generally in an east/west direction near its intersection with the BNSF single main line track near Vermont, Illinois.

5. The grade crossing formed by the intersection of CR 13 and the single main line track of BNSF, is inventoried as DOT # 078 455 Y, and is located at railroad milepost 142.62 near Vermont, Illinois. BNSF owns and maintains said railroad tracks and right of way at or near CR 13. The crossing is currently equipped with warning devices, consisting of automatic flashing lights.

6. The public street known as CR 13 is currently located on both the east and west sides of the aforementioned grade crossing and is and will be maintained, by and at the expense of the County Fulton, Illinois.

7. The number of trains operated over this single mainline track is approximately 14 trains per day.

8. Pursuant to Stipulated Agreement No. 1783 and Case No. T14-0099, the Illinois Commerce Commission has previously ordered on September 18, 2014, the installation of automatic flashing lights and gates, and constant warning time (CWT) for the crossing containing the single main line, with the parties hereto to pay a division of cost as follows:

- COST DIVISION TABLE -

IMPROVEMENT	EST. COST	GCPF	ROAD DISTRICT	COUNTY	COMPANY
Install Automatic Flashing Light Signals and Gates, controlled by CWT Circuitry at the CH 13 grade crossing.	$178,308	85% $151,562[2]	$0	10% 17,831	5% $8,915[3]

9. The Petitioner, in order to improve the efficiencies of the operations in the area and elsewhere, and enhance the public convenience in this and other counties, now needs to build an extension of the siding track on its right of way, which parallels the mainline track, and will run through the aforementioned at grade crossing if approved.

10. The current roadway profile for the project is attached hereto as Exhibit A to the Petition. The roadway and signal plan is contained on the attached Exhibit B to the Petition.

11. Given the proposed changes in the area, Petitioner requests that the Commission, upon investigation and hearing, consider approving these plans, and make a determination of suitable and appropriate warnings, and their location, at the aforementioned grade crossing.

12. The current signal plan, as diagrammed in Exhibit B, includes relocation of the existing signals to accommodate the siding extension and an upgrade of the signals to a constant warning time system.

13. Given the proposed changes in the area, and that the ICC has already ordered and allocated funds for the installation of the flashing lights, gates, and CWT circuitry on one track, BNSF will agree to pay all reasonable costs of the proposed additional changes in excess of the allocated amount from T14-0099 noted above, which will include installation of cantilevers, the additional track and crossing surface as well.

14. It is in the best interest of the public at large to install the additional track at the crossing, have the Commission consider and determine suitable warning devices at the crossing and highway approaches, and to meet the need for improved efficiencies of rail operations in the area.

WHEREFORE, Petitioner prays that this Honorable Commission will set the aforesaid matter for **an expedited hearing and determination**, and after said hearing enter an order:

1. Approving the installation of an additional track at the public crossing inventoried as DOT # 078 455 Y;

2. Determine appropriate and suitable warning and traffic control devices at the said crossing, as well as the location of those devices;

3. Determine the division of the costs among the parties;

4. Determine a reasonable time period for completion of any work or improvements to be performed;

5. For other just and appropriate relief.

Respectfully submitted,

BNSF Railway Company, Petitioner

By: s/Robert J. Prendergast
Robert J. Prendergast

Robert J. Prendergast
Kevin W. Baldwin
Michael W. Shumate
DALEY MOHAN GROBLE, P.C.
Attorneys for BNSF Railway Company
55 West Monroe Street
Suite 1600
Chicago, Illinois, 60603
Phone-(312) 422-9999
Fax-(312) 422-5370
Email-rprendergast@daleymohan.com

VERIFICATION

I, Calvin Nutt, Manager Public Projects for the Petitioner, BNSF Railway Company, hereby certify pursuant to 735 ILCS 5/1-109 that I have read the foregoing Amended Petition and the matters contained therein are believed true and correct based upon the information provided to me and reasonable inquiry made with respect to same.

By: s/ Calvin Nutt
Calvin Nutt

CERTIFICATE OF SERVICE

I, Robert J. Prendergast, an attorney, hereby certify that on the 13th day of January, 2015, I caused the foregoing AMENDED PETITION to be served on attorneys/parties of record by e-filing the same with the Illinois Commerce Commission and by forwarding the same to the following at the email and/or street addresses listed below, before 5:00 p.m.:

John Saladino
Illinois Commerce Commission
527 E. Capitol Avenue
Springfield, IL 62701
jsaladino@icc.illinois.gov

Nicole L. Grube
County Engineer
Fulton County Department of Public Works & Highways
430 East Oak Street
Canton, Illinois 61520
NGrube@fultonco.org

Omer Osman, Director of Highways – IDOT
ATTN: Jason Johnson
2300 South Dirksen Parkway, Room 205
Springfield, IL 62764
jason.johnson@illinois.gov

Jennifer R. Kuntz
Assistant Chief Counsel
Illinois Department of Transportation
2300 South Dirksen Parkway, Room 313
Springfield, IL 62764
jennifer.kuntz@illinois.gov

s/Robert J. Prendergast
Robert J. Prendergast

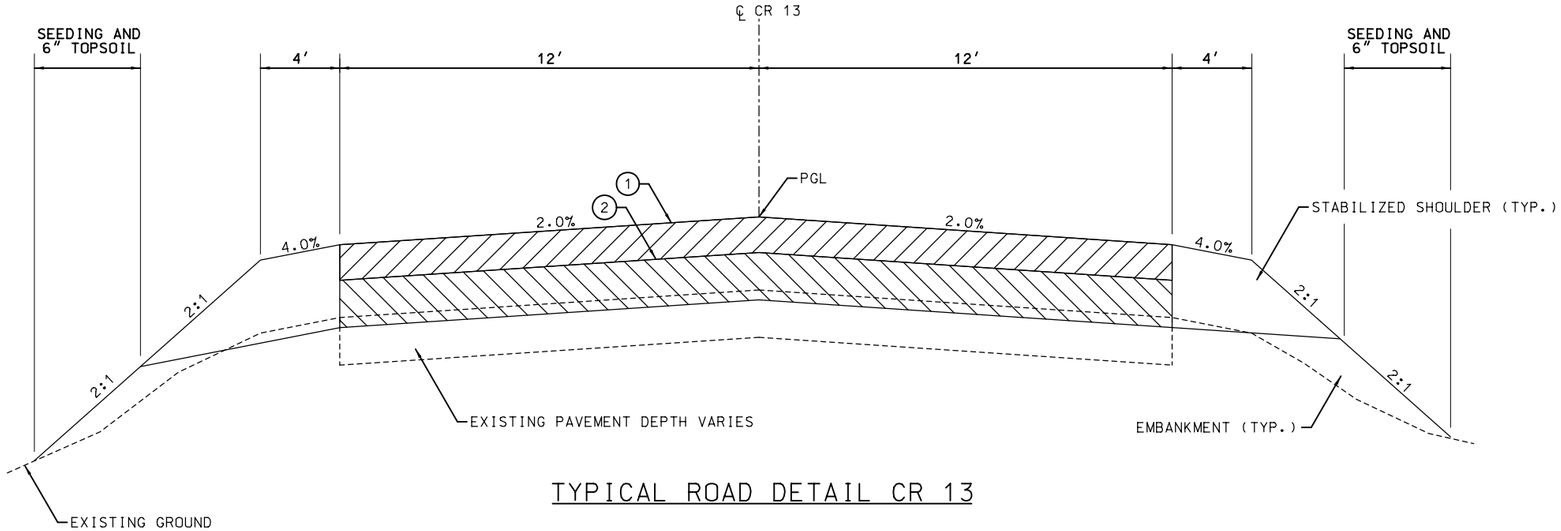

NOTE:
STABILIZED SHOULDER IS THE EQUIVALENT OF SUBBALLAST AS SPECIFIED IN THE PROJECT MANUAL.

TYPICAL ROAD DETAIL CR 13

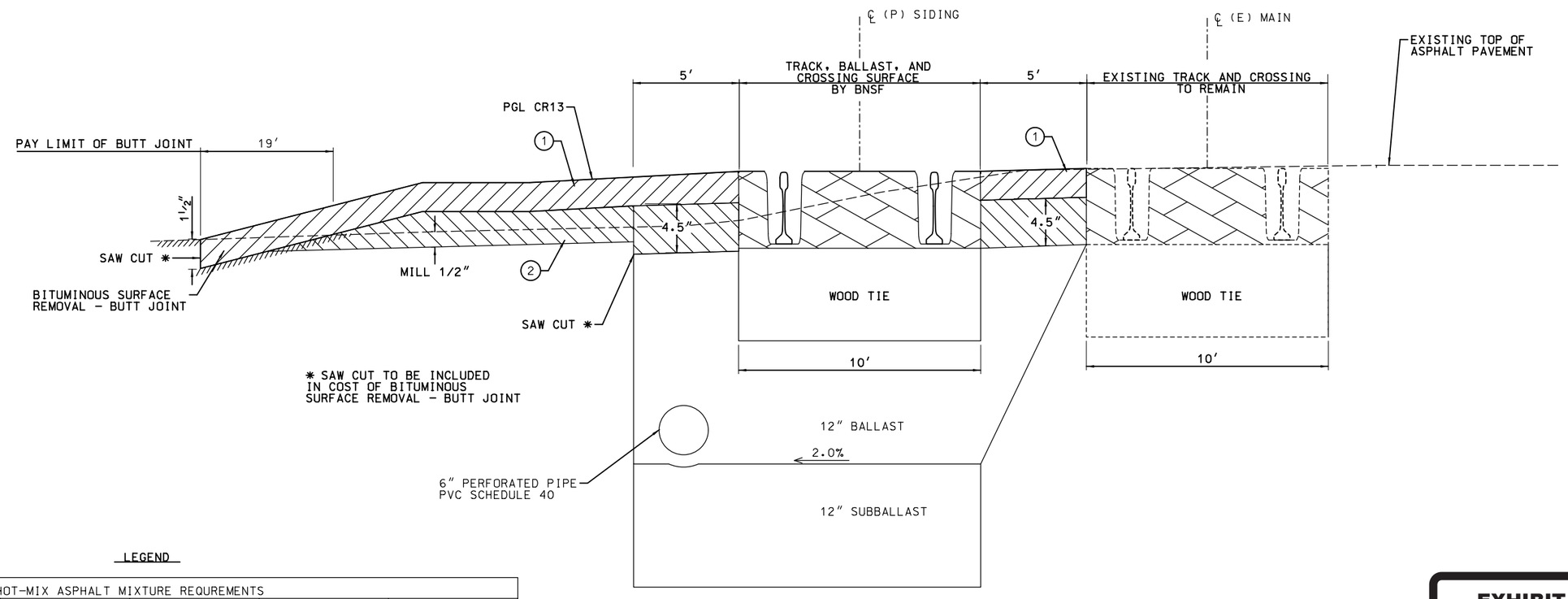

LEGEND

	HOT-MIX ASPHALT MIXTURE REQUREMENTS					
	PATTERNS	ITEM	AGGREGATE COMPOSITION	ASPHALT GRADE	VOIDS	THICKNESS
1		HMA SURFACE	IL-12.5 MIX "C"	PG 64-28	4% N50	1.5"
2		HMA BINDER	IL-12.5	PG 64-22	4% N50	VARIES

NOTE: SEE CROSS SECTIONS FOR CHANGES IN TYPICAL SECTIONS

CROSSING DETAIL CR 13

NTS

EXHIBIT

A

exhibitsticker.com

ISSUED FOR REVIEW

REV	DATE	DESCRIPTION	BY	SUB	APP

INFORMATION CONFIDENTIAL
ALL PLANS, DRAWINGS, SPECIFICATIONS, AND/OR INFORMATION FURNISHED HEREWITH SHALL REMAIN THE PROPERTY OF BNSF RAILWAY COMPANY AND SHALL BE HELD CONFIDENTIAL AND SHALL NOT BE USED FOR ANY PURPOSE NOT PROVIDED FOR IN AGREEMENTS WITH BNSF RAILWAY COMPANY.

DESIGNED BY GCN
DRAWN BY JRW
CHECKED BY BJR
APPROVED BY
DATE 10/23/2014

BNSF RAILWAY

HANSON
Hanson Professional Services Inc.
1525 S. Sixth Street
Springfield, IL 62703
Offices Nationwide

BNSF RAILWAY
SPRINGFIELD DIVISION
VERMONT SIDING EXTENSION
ROAD AND CROSSING TYPICAL SECTIONS

CONTRACT NO. 14R0115B
DRAWING NO. RC-02
REVISION
SHEET NO. 8 OF 22
SCALE

Plot driver:pw:\spi-svr306.hanson.dom\Hanson Projects\Documents\Project_Workspace\MicroStation\Projects\BNSF_Railway-2011\Plot\BNSF_Railway.pdf half.pltcfg
Pen table:pw:\spi-svr306.hanson.dom\Hanson Projects\Documents\Project_Workspace\MicroStation\Projects\BNSF_Railway-2011\Plot\BNSF_Railway_Color.tbl
File:pw:\spi-svr306.hanson.dom\Hanson Projects\Documents\Jobs\R0098\CAD\Rail\Sheet\C-3002-Typical_Section_v.dgn
Date:10/27/2014 Time:4:12:33 PM

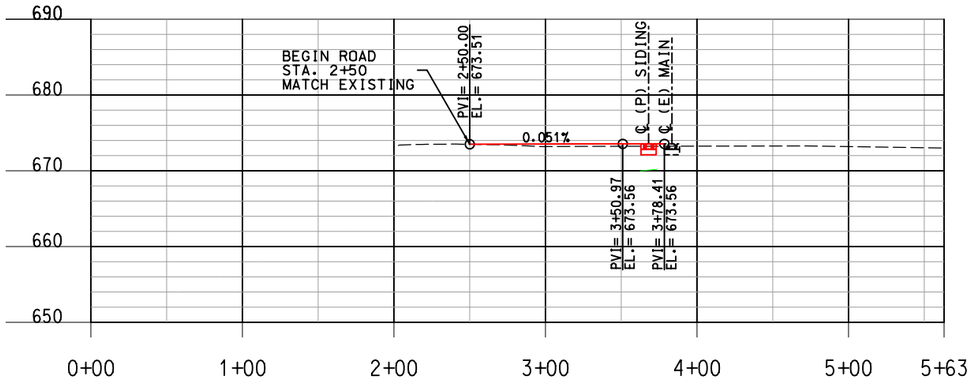

PROFILE

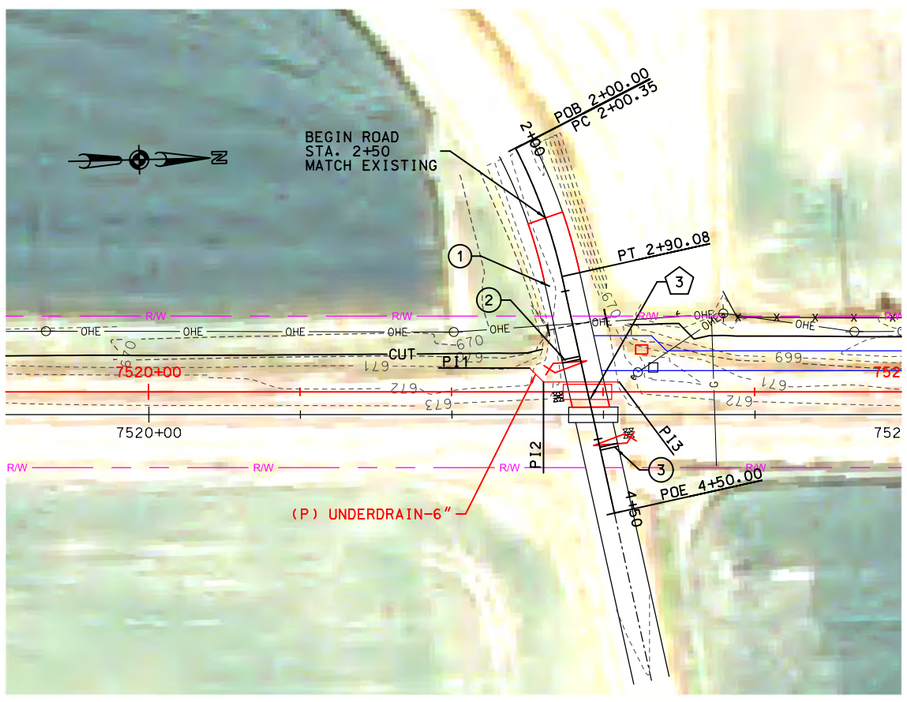

PLAN

CONSTRUCTION NOTES:

1. SEE SHEET RC-02 FOR ROAD TYPICAL SECTION.
2. 2' WIDE STOP BAR FOR EAST BOUND TRAFFIC STA. 3+43.98 TO STA. 3+45.98
3. 2' WIDE STOP BAR FOR WEST BOUND TRAFFIC STA. 4+05.48 TO STA. 4+07.48

WORK BY BNSF:

3. CONSTRUCT TRACK SECTION PER BNSF STANDARD DWG NO. 2253. INSTALL 10' CONCRETE PANELS PER BNSF STD DWG NOS. 200100-200102.

NOTES:

1. FOR TRACK ALIGNMENT, SEE DRAWING NO. RT-01
2. ALL EXISTING SIGNS TO BE MAINTAINED DURING CONSTRUCTION AND RELOCATED AS NECESSARY AFTER COMPLETION.
3. ADJUSTMENTS TO ROAD VERTICAL ALIGNMENTS TO FOLLOW EXISTING ROAD HORIZONTAL ALIGNMENTS.
4. PROPOSED ROAD CROSS SECTION WIDTH TO MATCH EXISTING ROAD WIDTH.

EXHIBIT
B
exhibitsticker.com

COUNTY ROAD 13

ELEMENT NAME	ELEMENT TYPE	POINT	STATION	NORTHING	EASTING	BEARING
POB	PI	PI	2+00.00	1330452.90	2224822.80	
CURVE_1	TOTAL DELTA = 14°44'26" RT Dc = 16°25'35" Rc = 350.00 Lc = 89.74 T = 45.27	PC	2+00.35	1330453.05	2224823.11	N64°07'39"E
		PI	2+45.62	1330472.81	2224863.85	
		PT	2+90.08	1330481.55	2224908.27	N78°52'06"E
POE	PI	PI	4+50.00	1330512.42	2225065.18	N78°52'06"E

UNDERDRAIN-6" SCHEDULE 40 PVC CORRUGATED PERFORATED

ELEMENT NAME	ELEMENT TYPE	POINT	STATION	NORTHING	EASTING
PI1	PI (OUTLET ON FRONT SLOPE)	PI	7522+51.51	1330458.8024	2224968.1849
PI2	PI	PI	7522+60.48	1330467.7619	2224977.5803
PI3	PI	PI	7523+10.48	1330517.7478	2224978.7672

50' 0 25' 50' 100'
GRAPHIC SCALE:

Plot driver:pw:\spi-svr306.hanson.dom\Hanson Projects\Documents\Project Workspace\MicroStation\Projects\BNSF_Railway-2011\Plot\BNSF_Railway_pdf_half.pltcfg
Pen table:pw:\spi-svr306.hanson.dom\Hanson Projects\Documents\Project Workspace\MicroStation\Projects\BNSF_Railway-2011\Plot\BNSF_Railway_Color.tbl
File:pw:\spi-svr306.hanson.dom\Hanson Projects\Documents\Jobs\R0098\CAD\Rail\Sheet\C-7030-v.dgn
Date:10/27/2014 Time:4:12:52 PM

ISSUED FOR REVIEW

REV	DATE	DESCRIPTION	BY	SUB	APP

INFORMATION CONFIDENTIAL
ALL PLANS, DRAWINGS, SPECIFICATIONS, AND/OR INFORMATION FURNISHED HEREWITH SHALL REMAIN THE PROPERTY OF BNSF RAILWAY COMPANY AND SHALL BE HELD CONFIDENTIAL AND SHALL NOT BE USED FOR ANY PURPOSE NOT PROVIDED FOR IN AGREEMENTS WITH BNSF RAILWAY COMPANY.

DESIGNED BY GCN
DRAWN BY JRW
CHECKED BY BJR
APPROVED BY
DATE 10/23/2014

BNSF RAILWAY

HANSON
Hanson Professional Services Inc.
1525 S. Sixth Street
Springfield, IL 62703
Offices Nationwide

BNSF RAILWAY
SPRINGFIELD DIVISION
VERMONT SIDING EXTENSION
PLAN AND PROFILE

CONTRACT NO. 14R0115B
DRAWING NO. CP-01
REVISION
SHEET NO. 15 OF 22
SCALE