PRIME WARNING TIME = 30 SECONDS

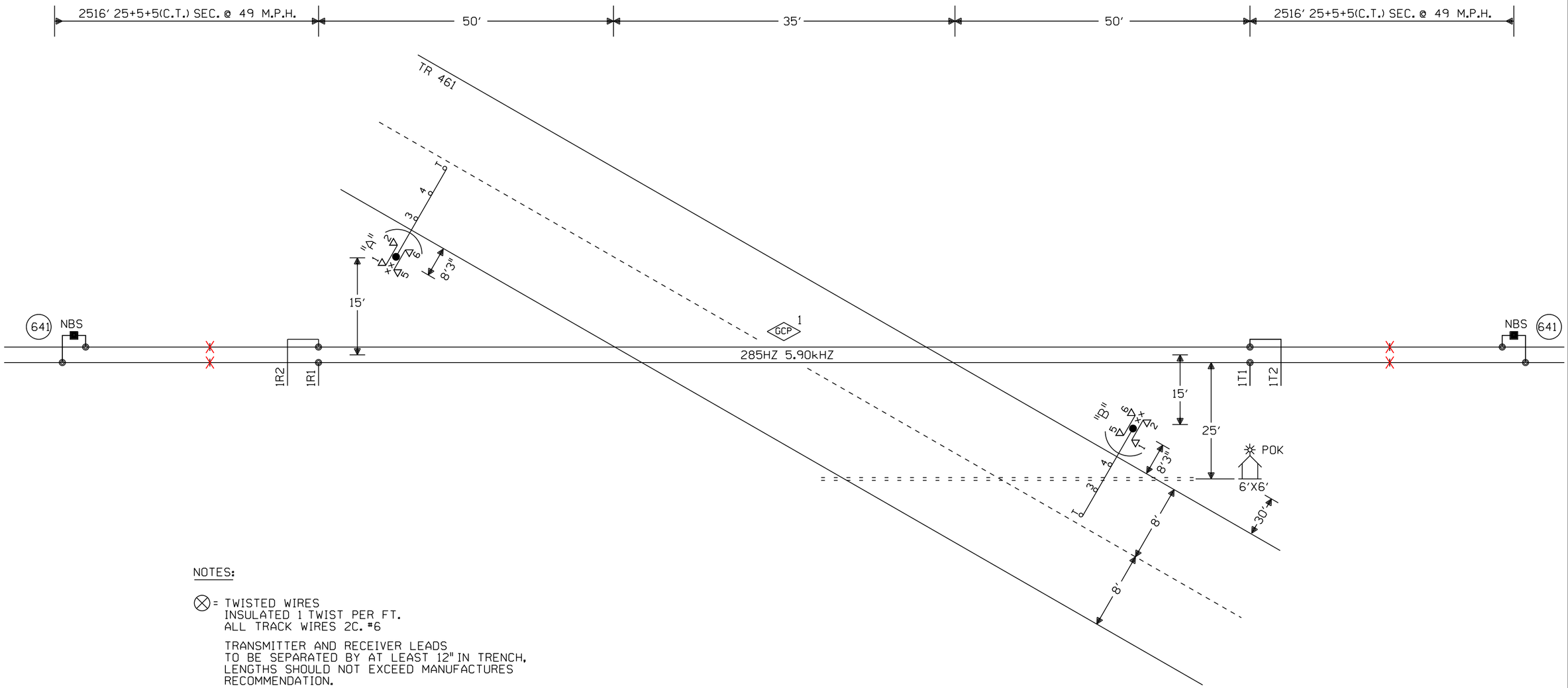

NOTES:

⊗ = TWISTED WIRES
INSULATED 1 TWIST PER FT.
ALL TRACK WIRES 2C. #6

TRANSMITTER AND RECEIVER LEADS
TO BE SEPARATED BY AT LEAST 12" IN TRENCH,
LENGTHS SHOULD NOT EXCEED MANUFACTURES
RECOMMENDATION.

TOP OF FOUNDATION TO BE AT SAME ELEVATION
AS THE SURFACE OF THE TRAVELED WAY & NO
MORE THAN 4" ABOVE THE SURFACE OF THE GROUND.

ALL BUNGALOW WIRING TO BE #16 AWG FLEX
UNLESS OTHERWISE SPECIFIED EXCEPT ALL GROUND
WIRE TO BE #6 AWG FLEX OR LARGER.

ALL WIRING IN GATE MECHANISM TO BE #10 "AWG FLEX".

REFER TO UP STANDARD DWG FOR BUNGALOW GROUNDING.

PORTABLE GENERATOR EXTENSION CORD
FOR 240V TO 240V IS PROVIDED AS WELL
AS A 120V TO 240V ADAPTER.

ALL LIGHTS TO BE 12" ROUNDELS.

= = = = = = 4" X 70' CONDUIT

LIGHTS: LED LIGHTS

GATE A: 16'
GATE B: 16'

xx = BELL

) = GUARD RAIL

OFFSET AND ISLAND DISTANCES
TO BE VERIFIED BY FIELD

W(S) ←—○—→ E(N)

CONSTRUCTION NOTES:

1. REMOVE INSULATED JOINTS AT M.P. 112.36 AND M.P. 112.68
2. FINAL CABIN PLACEMENT TO BE VERIFIED BY THE ICC.

X = REMOVE INSULATED JOINTS

NEW SHEET

					Designed: 07/07/14 INSTALL FLASHERS W/GATES & CWT. AT TR 461 M.P. 112.50 Rec#: WO#: 25649 IS: /MRN / /SSS/JTB	MODIFICATION LEVEL		CIRCUIT MODIFICATIONS ARE NOT TO BE MADE WITHOUT AUTHORITY FROM THE OFFICE OF SIGNAL DESIGN	Date: 07/07/14 Des: SSS Chk: MRN AFE: 25649	UNION PACIFIC RAILROAD SCHELLER, ILLINOIS TR 461 PINCKNEYVILLE SUBDIVISION Office of AVP Engineering - Signal Omaha, Nebraska	Sh.: 1 DOT 431038L MP: 112.50 ID: 127611250.1X
						Q. A. LAST LEVEL CHECKED	DU				
						LAST LEVEL MOD THIS TYPICAL	DU				
						LAST LEVEL BY DESIGNER	DU				
						CHANGED FROM TYPICAL? REV 01.24.11 4K 1TKBG.1	Y				

127611250.1X 11/18/2014 1:31:37 PM

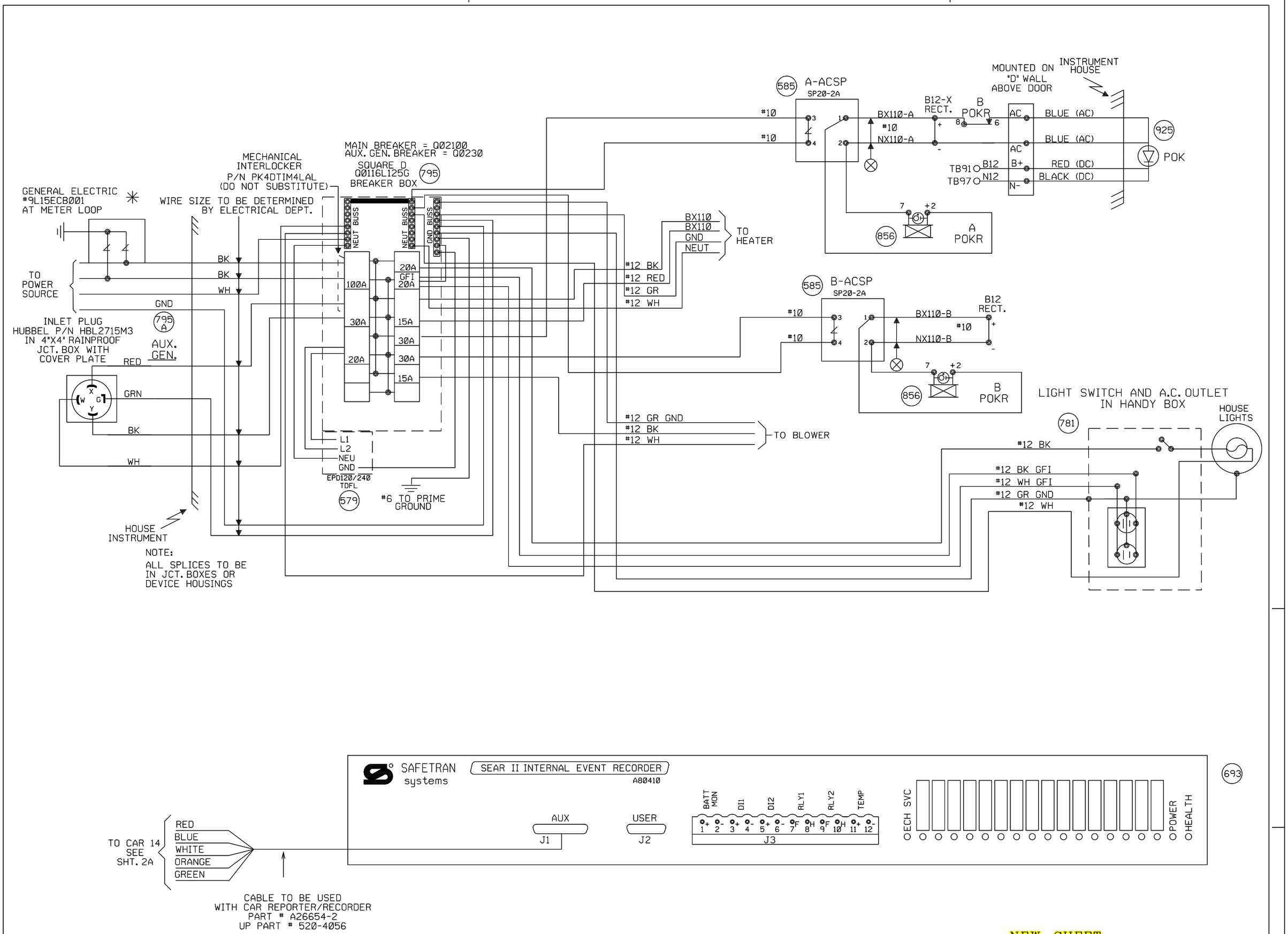

NEW SHEET

Designed: 07/07/14 INSTALL FLASHERS W/GATES & CWT, AT TR 461 M.P. 112.50 Rec#: WO#: 25649 IS: /NBT / /SSS/JTB	MODIFICATION LEVEL		CIRCUIT MODIFICATIONS ARE NOT TO BE MADE WITHOUT AUTHORITY FROM THE OFFICE OF SIGNAL DESIGN	Date: 07/07/14 Des: SSS Chk: NBT AFE: 25649	UNION PACIFIC RAILROAD SCHELLER, ILLINOIS TR 461 PINCKNEYVILLE SUBDIVISION Office of AVP Engineering - Signal Omaha, Nebraska	Sh.: 2 DOT 431038L MP: 112.50 ID: 127611250.2X
	Q. A. LAST LEVEL CHECKED	DU				
	LAST LEVEL MOD THIS TYPICAL	DU				
	LAST LEVEL BY DESIGNER	DU				
	CHANGED FROM TYPICAL?	Y				
	REV 01.24.11 4K SEARAC.2					

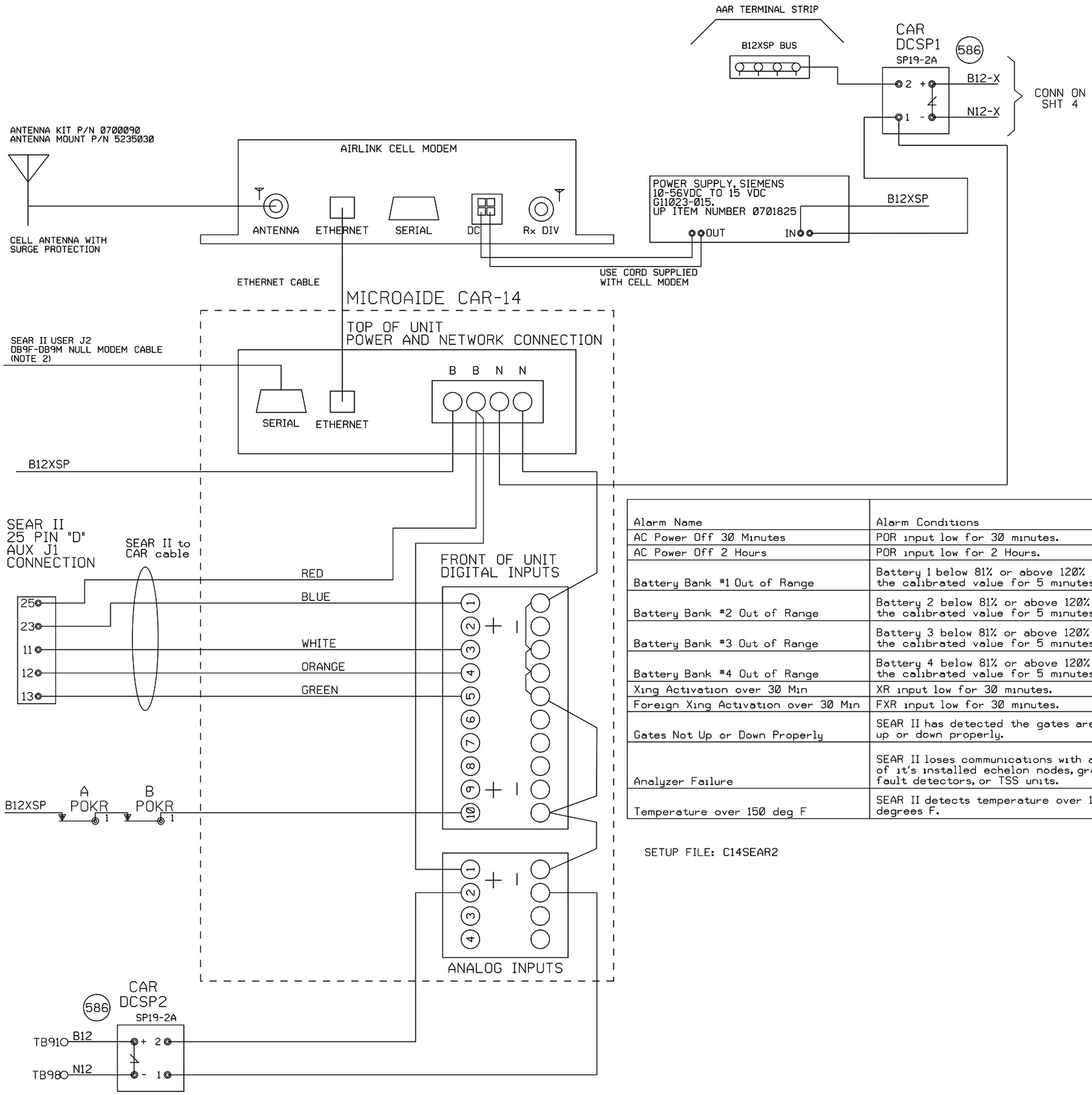

NOTE:
1) DO NOT JUMPER UNUSED INPUTS
2) THE CAR14 SERIAL PORT IS AVAILABLE TO ADD REMOTE CONNECTIVITY TO EXISTING LOGGING EQUIPMENT. USE NULL MODEM CABLE WITH SHIELDING DISCONNECTED AT ONE OR BOTH SIDES.

ANALOG INPUTS:
A1) B12X BATTERY BANK
A2) B12 BATTERY BANK
A3) BATTERY BANK 3
A4) BATTERY BANK 4

DIGITAL INPUTS
D1) XR (BLUE WIRE)
D2) FOREIGN XR
D3) ANALYZER FAILURE (WHITE WIRE)
D4) HIGH TEMPERATURE (ORANGE WIRE)
D5) GATES NOT UP OR DOWN PROPERLY (GREEN WIRE)
D10) POWER OFF INDICATION

Alarm Name	Alarm Conditions	Alarm Clearing Conditions	Cleared by Maintainer Mode?
AC Power Off 30 Minutes	POR input low for 30 minutes.	POR input high for 5 minutes.	No
AC Power Off 2 Hours	POR input low for 2 Hours.	POR input high for 5 minutes.	No
Battery Bank #1 Out of Range	Battery 1 below 81% or above 120% of the calibrated value for 5 minutes.	Battery 1 within acceptable range for 5 minutes.	No
Battery Bank #2 Out of Range	Battery 2 below 81% or above 120% of the calibrated value for 5 minutes.	Battery 2 within acceptable range for 5 minutes.	No
Battery Bank #3 Out of Range	Battery 3 below 81% or above 120% of the calibrated value for 5 minutes.	Battery 3 within acceptable range for 5 minutes.	No
Battery Bank #4 Out of Range	Battery 4 below 81% or above 120% of the calibrated value for 5 minutes.	Battery 4 within acceptable range for 5 minutes.	No
Xing Activation over 30 Min	XR input low for 30 minutes.	XR input high for 10 seconds.	Yes
Foreign Xing Activation over 30 Min	FXR input low for 30 minutes.	FXR input high for 10 seconds.	Yes
Gates Not Up or Down Properly	SEAR II has detected the gates are not up or down properly.	SEAR II has detected the gates are up or down properly.	No
Analyzer Failure	SEAR II loses communications with any of it's installed echelon nodes, ground fault detectors, or TSS units.	SEAR II has recovered after an analyzer failure alarm.	No
Temperature over 150 deg F	SEAR II detects temperature over 150 degrees F.	SEAR II sensor detects temperature is OK after a High-Temp alarm.	No

SETUP FILE: C14SEAR2

NEW SHEET

Designed: 07/07/14
INSTALL FLASHERS W/GATES & CWT, AT TR 461 M.P. 112.50
Rec#: WO#: 25649
IS: /NBT /SSS/JTB

MODIFICATION LEVEL	
Q. A. LAST LEVEL CHECKED	DU
LAST LEVEL MOD THIS TYPICAL	DU
LAST LEVEL BY DESIGNER	DU
CHANGED FROM TYPICAL?	Y

REV 01.24.11 4K ACDCCAR14SII.3

CIRCUIT MODIFICATIONS ARE NOT TO BE MADE WITHOUT AUTHORITY FROM THE OFFICE OF SIGNAL DESIGN

Date: 07/07/14
Des: SSS
Chk: NBT
AFE: 25649

UNION PACIFIC RAILROAD
SCHELLER, ILLINOIS
TR 461
PINCKNEYVILLE SUBDIVISION
Office of AVP Engineering - Signal Omaha, Nebraska

Sh.: 2A
DOT 431038L
MP: 112.50
ID: 127611250.2AX

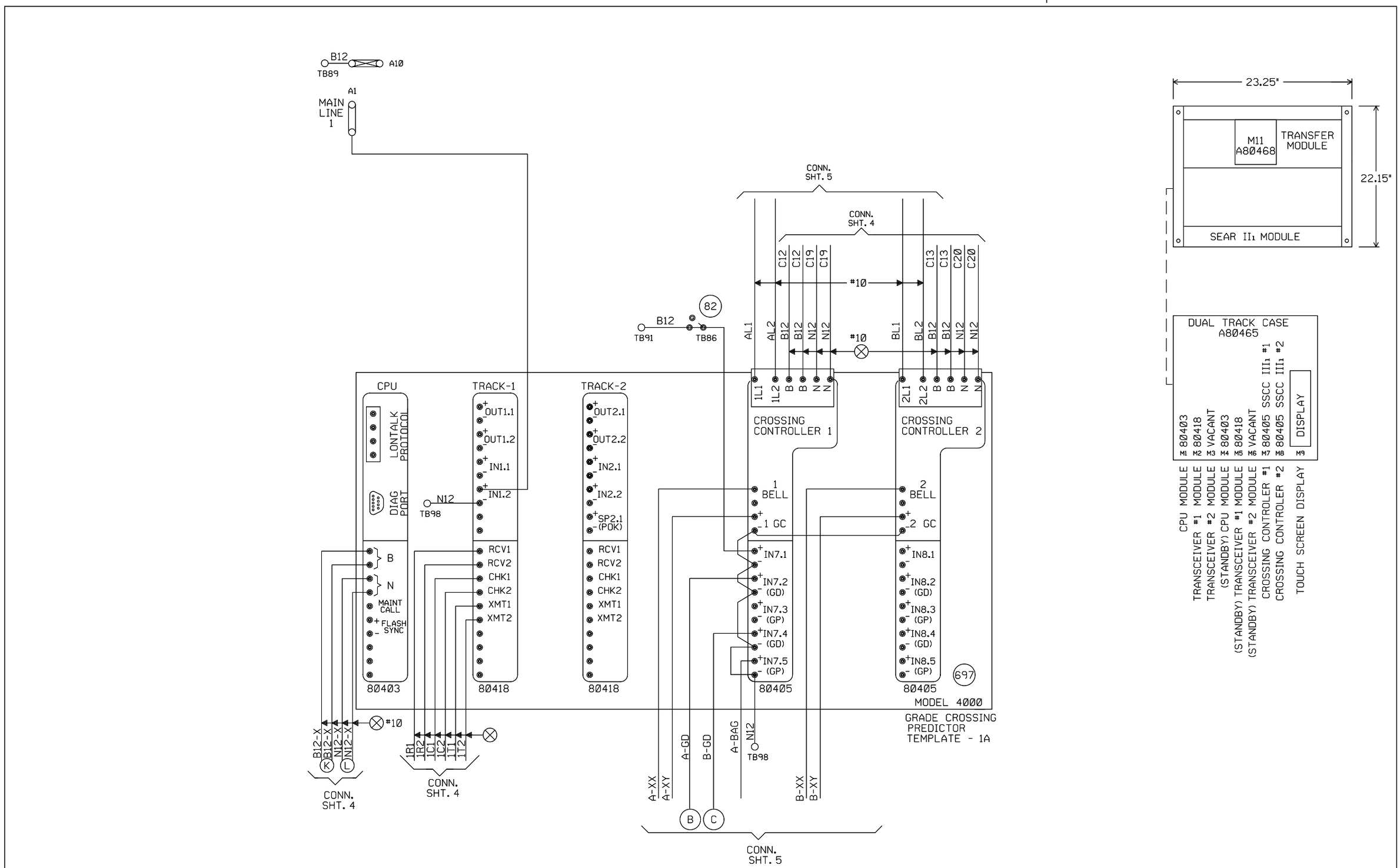

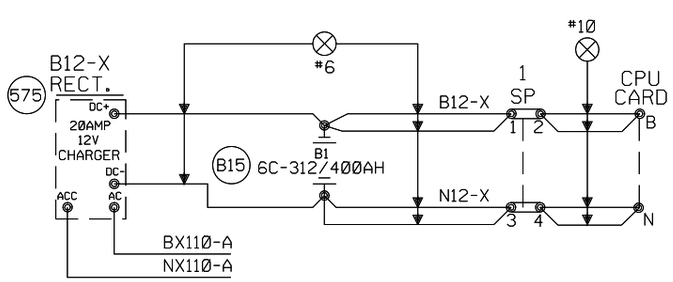

"Mf" FREQUENCY (HZ)	MAXIMUM TRANSMIT WIRE LENGTH (FEET)
86	100
114	125
156	150
211	200
285-970	250

NOTE:
EACH TRANSMITTER TO RAIL WIRE FROM XMT1 AND XMT2 MUST NOT EXCEED THE MAXIMUM LENGTH SPECIFIED IN THE TABLE SHOWN. THE RECEIVER WIRE LENGTH IS NOT CRITICAL. DOES NOT APPLY TO 6 TRACK WIRE APPLICATION.

NEW SHEET

Designed: 07/07/14
INSTALL FLASHERS W/GATES & CWT. AT TR 461 M.P. 112.50
Rec#: WO#: 25649
IS: /NBT /SSS/JTB

MODIFICATION LEVEL	
Q. A. LAST LEVEL CHECKED	DU
LAST LEVEL MOD THIS TYPICAL	DU
LAST LEVEL BY DESIGNER	DU
CHANGED FROM TYPICAL?	Y

REV 01.24.11 4K 2TKGF.3

CIRCUIT MODIFICATIONS ARE NOT TO BE MADE WITHOUT AUTHORITY FROM THE OFFICE OF SIGNAL DESIGN

Date: 07/07/14
Des: SSS
Chk: NBT
AFE: 25649

UNION PACIFIC RAILROAD
SCHELLER, ILLINOIS
TR 461
PINCKNEYVILLE SUBDIVISION
Office of AVP Engineering - Signal Omaha, Nebraska

Sh.: 3
DOT 431038L
MP: 112.50
ID: 127611250.3X

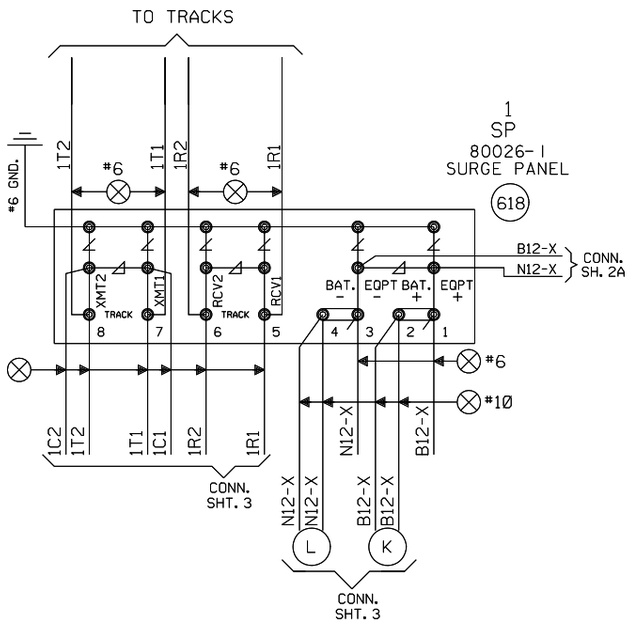

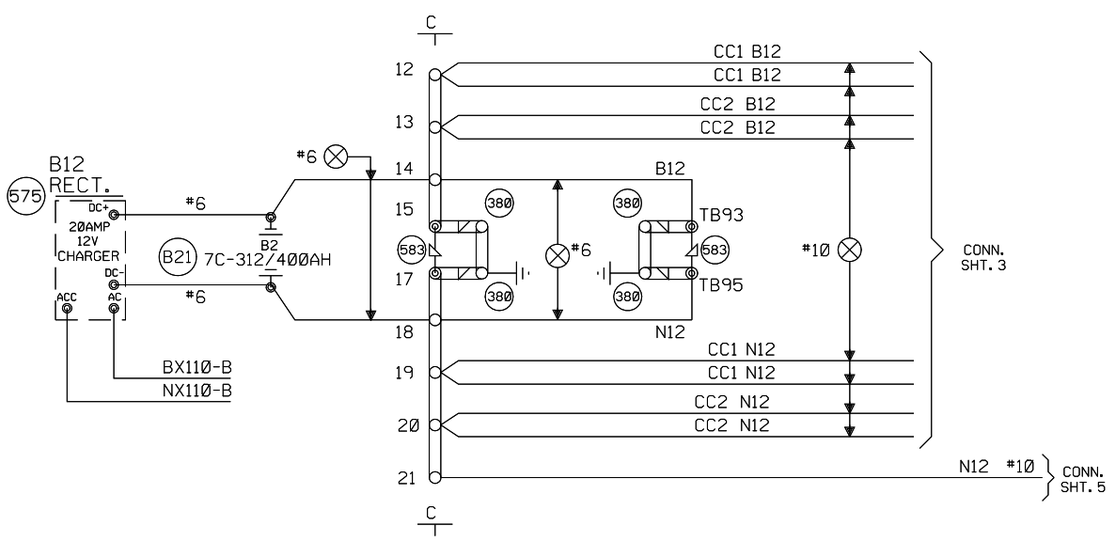

NEW SHEET

Designed: 07/07/14	MODIFICATION LEVEL		
INSTALL FLASHERS W/GATES & CWT, AT TR 461 M.P. 112.50	Q. A. LAST LEVEL CHECKED	DU	
	LAST LEVEL MOD THIS TYPICAL	DU	
	LAST LEVEL BY DESIGNER	DU	
Rec#: 15: WO#: 25649 /NBT /SSS/JTB	CHANGED FROM TYPICAL?	Y	
	REV 01.24.11 4K 4TKSPGFC.4		

CIRCUIT MODIFICATIONS ARE NOT TO BE MADE WITHOUT AUTHORITY FROM THE OFFICE OF SIGNAL DESIGN

Date: 07/07/14
Des: SSS
Chk: NBT
AFE: 25649

UNION PACIFIC RAILROAD
SCHELLER, ILLINOIS
TR 461
PINCKNEYVILLE SUBDIVISION
Office of AVP Engineering - Signal Omaha, Nebraska

Sh.: 4
DOT 431038L
MP: 112.50
ID: 127611250.4X

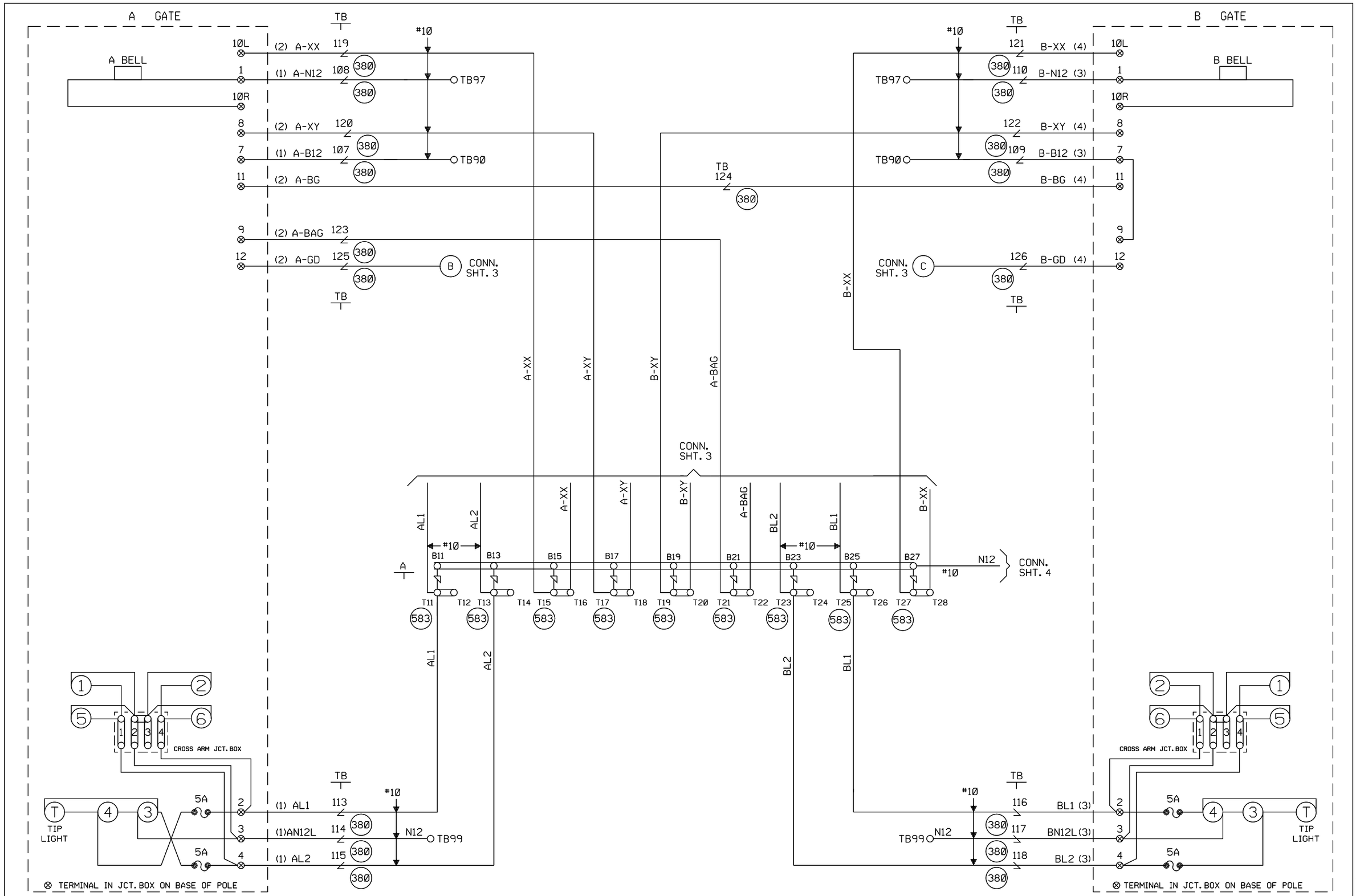

CABLE TABULATION

CABLE NO. 1 5C. NO.6 U.G.B.T. TO GATE A
CABLE NO. 2 7C. NO.14 U.G.B.T. TO GATE A
CABLE NO. 3 5C. NO.6 U.G.B.T. TO GATE B
CABLE NO. 4 7C. NO.14 U.G.B.T. TO GATE B

NEW SHEET

Designed: 07/07/14
INSTALL FLASHERS W/GATES & CWT, AT TR 461 M.P. 112.50
Rec#: WO#: 25649
IS: /NBT
/SSS/JTB

MODIFICATION LEVEL	
Q. A. LAST LEVEL CHECKED	DU
LAST LEVEL MOD THIS TYPICAL	DU
LAST LEVEL BY DESIGNER	DU
CHANGED FROM TYPICAL?	Y

REV 01.24.11 4K GFCTYP.5

CIRCUIT MODIFICATIONS ARE NOT TO BE MADE WITHOUT AUTHORITY FROM THE OFFICE OF SIGNAL DESIGN

Date: 07/07/14
Des: SSS
Chk: NBT
AFE: 25649

UNION PACIFIC RAILROAD
SCHELLER, ILLINOIS
TR 461
PINCKNEYVILLE SUBDIVISION
Office of AVP Engineering - Signal Omaha, Nebraska

Sh.: 5
DOT 431038L
MP: 112.50
ID: 127611250.5X

WCH 3593-E

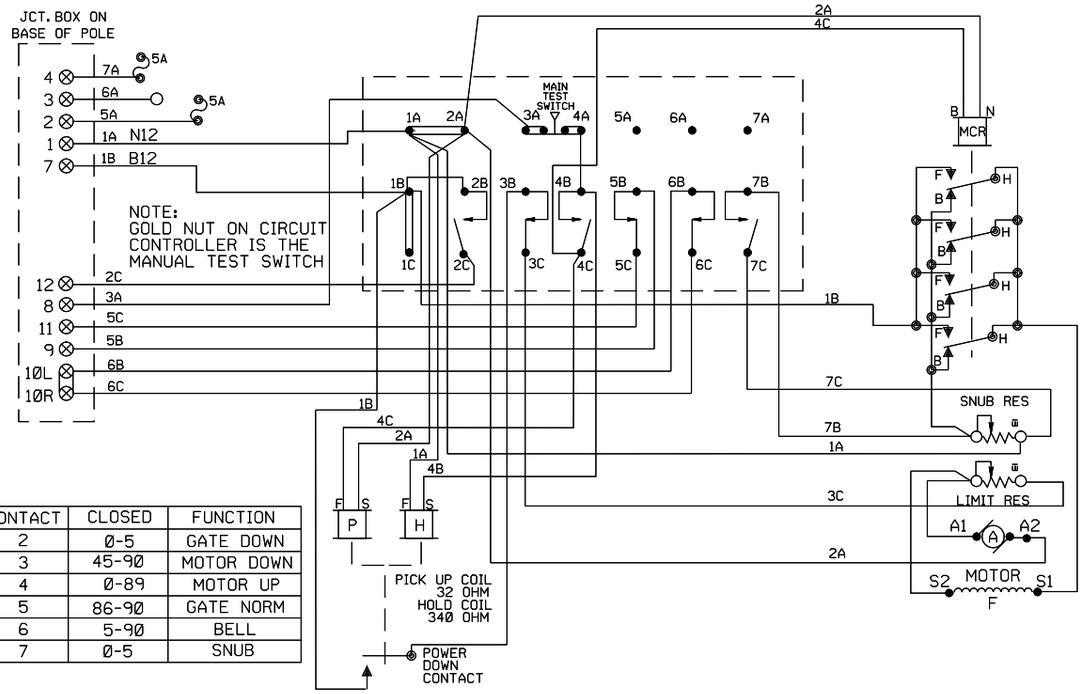

CONTACT	CLOSED	FUNCTION
2	0-5	GATE DOWN
3	45-90	MOTOR DOWN
4	0-89	MOTOR UP
5	86-90	GATE NORM
6	5-90	BELL
7	0-5	SNUB

WCH 3597-E

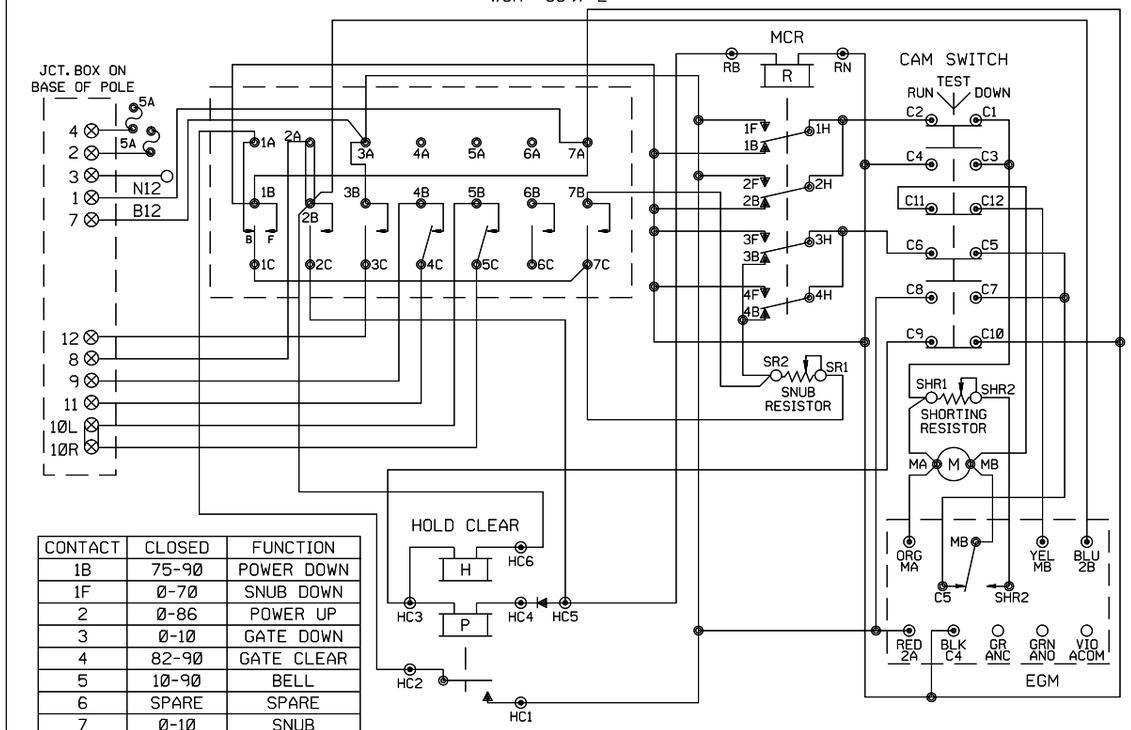

CONTACT	CLOSED	FUNCTION
1B	75-90	POWER DOWN
1F	0-70	SNUB DOWN
2	0-86	POWER UP
3	0-10	GATE DOWN
4	82-90	GATE CLEAR
5	10-90	BELL
6	SPARE	SPARE
7	0-10	SNUB

WCH 3597-RB

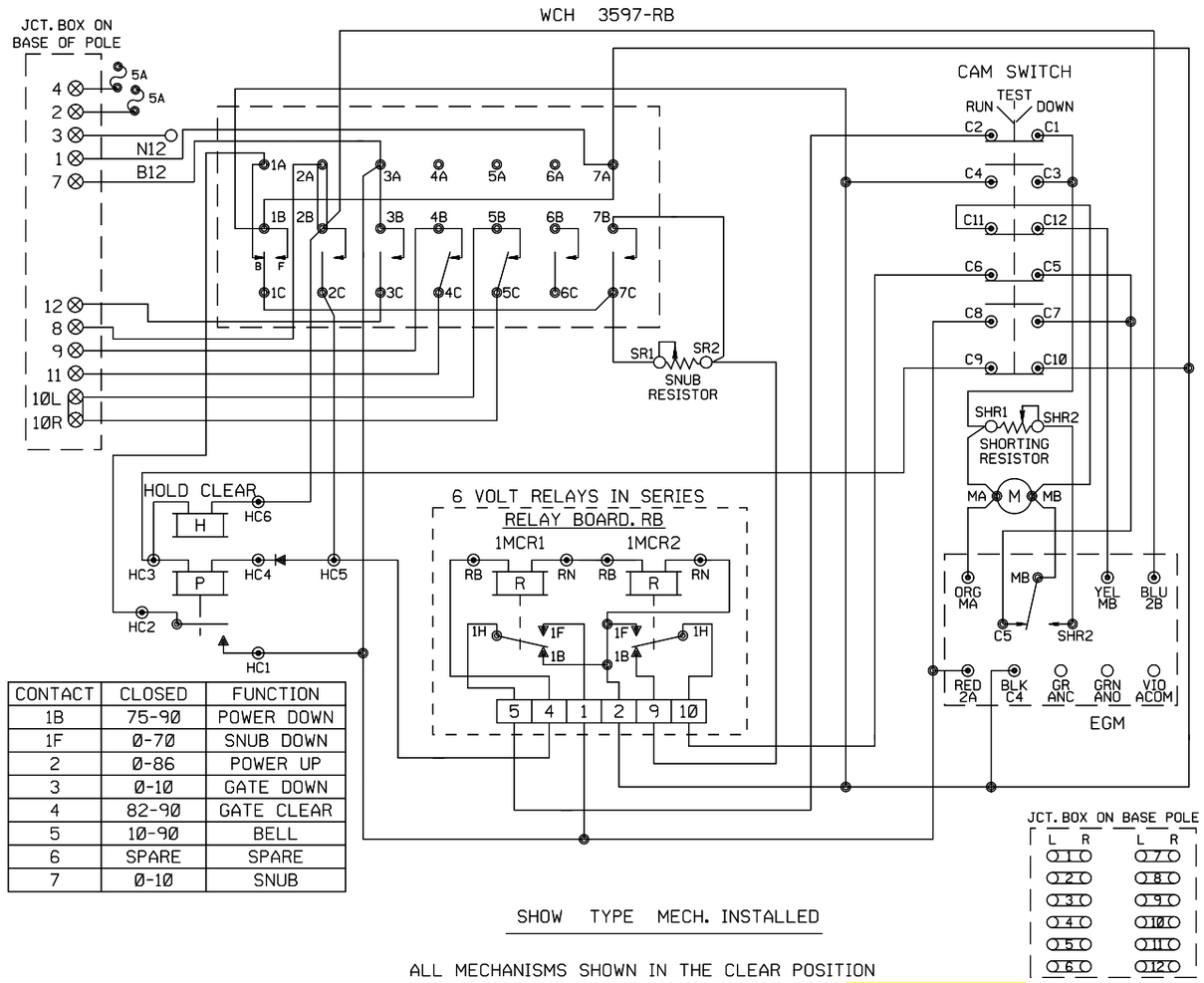

CONTACT	CLOSED	FUNCTION
1B	75-90	POWER DOWN
1F	0-70	SNUB DOWN
2	0-86	POWER UP
3	0-10	GATE DOWN
4	82-90	GATE CLEAR
5	10-90	BELL
6	SPARE	SPARE
7	0-10	SNUB

SHOW TYPE MECH. INSTALLED

ALL MECHANISMS SHOWN IN THE CLEAR POSITION

SAFETRAN S-60

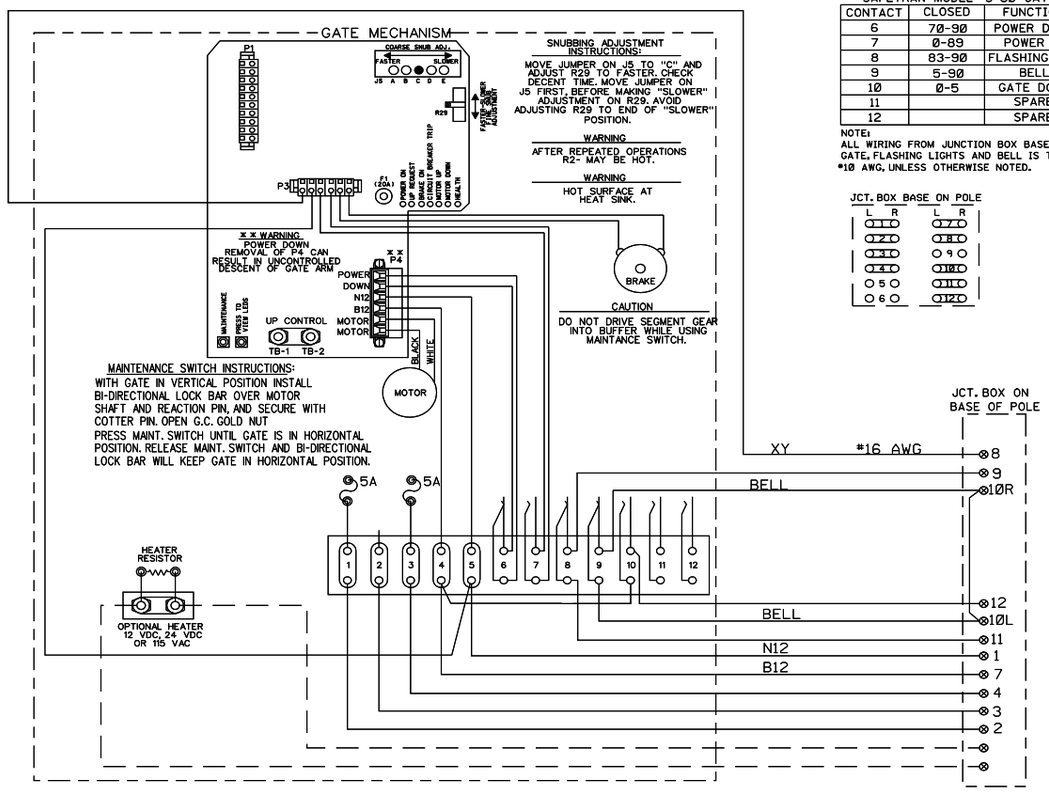

SAFETRAN MODEL "S-60" GATE

CONTACT	CLOSED	FUNCTION
6	70-90	POWER DOWN
7	0-89	POWER UP
8	83-90	FLASHING LGT.
9	5-90	BELL
10	0-5	GATE DOWN
11		SPARE
12		SPARE

NOTE:
ALL WIRING FROM JUNCTION BOX BASE TO GATE, FLASHING LIGHTS AND BELL IS TO BE #10 AWG, UNLESS OTHERWISE NOTED.

JCT. BOX BASE ON POLE

NEW SHEET

Designed: 07/07/14
INSTALL FLASHERS W/GATES & CWT, AT TR 461 M.P. 112.50
Rec#: WO#: 25649
IS: /NBT /SSS/JTB

MODIFICATION LEVEL	
Q. A. LAST LEVEL CHECKED	DU
LAST LEVEL MOD THIS TYPICAL	DU
LAST LEVEL BY DESIGNER	DU
CHANGED FROM TYPICAL?	N

REV 01.24.11 4K GWIRING.7

CIRCUIT MODIFICATIONS ARE NOT TO BE MADE WITHOUT AUTHORITY FROM THE OFFICE OF SIGNAL DESIGN

Date: 07/07/14
Des: SSS
Chk: NBT
AFE: 25649

UNION PACIFIC RAILROAD
SCHELLER, ILLINOIS
TR 461
PINCKNEYVILLE SUBDIVISION
Office of AVP Engineering - Signal Omaha, Nebraska

Sh.: 6
DOT 431038L
MP: 112.50
ID: 127611250.6X

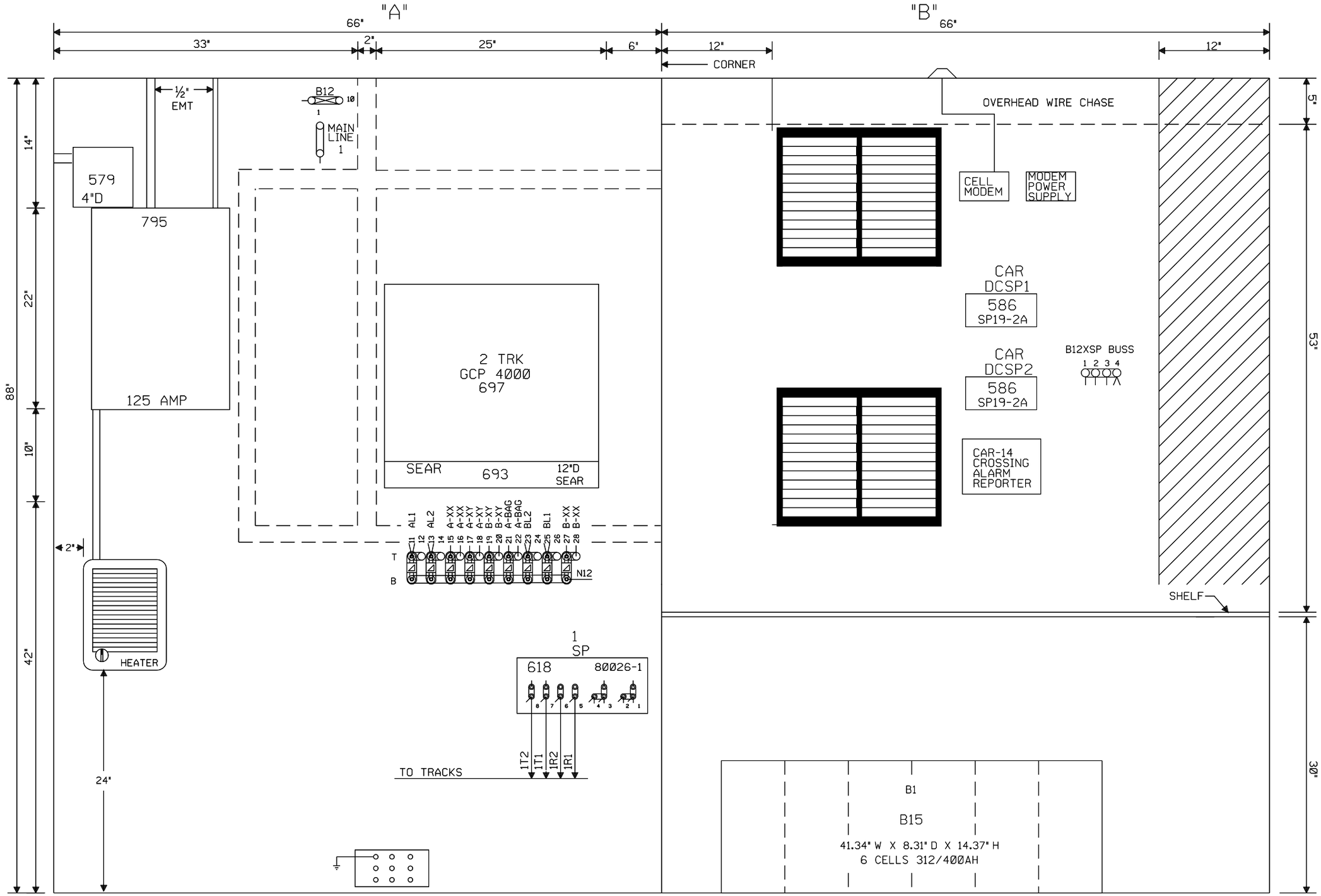

6X6 WAYSIDE/XING HOUSE WITH HEATER AND BLOWER U.P. PART#520-2529

NOTE: ALL DIMENSIONS SHOWN ARE APPROXIMATE.

NEW SHEET

Designed: 07/07/14 INSTALL FLASHERS W/GATES & CWT, AT TR 461 M.P. 112.50 Rec#: WO#: 25649 IS: /NBT /SSS/JTB	MODIFICATION LEVEL		CIRCUIT MODIFICATIONS ARE NOT TO BE MADE WITHOUT AUTHORITY FROM THE OFFICE OF SIGNAL DESIGN	Date: 07/07/14 Des: SSS Chk: NBT AFE: 25649	UNION PACIFIC RAILROAD SCHELLER, ILLINOIS TR 461 PINCKNEYVILLE SUBDIVISION Office of AVP Engineering - Signal Omaha, Nebraska
	Q. A. LAST LEVEL CHECKED	DU			
	LAST LEVEL MOD THIS TYPICAL	DU			
	LAST LEVEL BY DESIGNER	DU			
	CHANGED FROM TYPICAL?	Y			
	REV 01.24.11 4K 4TKGFC.8				

Sh.:	7
DOT	431038L
MP:	112.50
ID:	127611250.7X

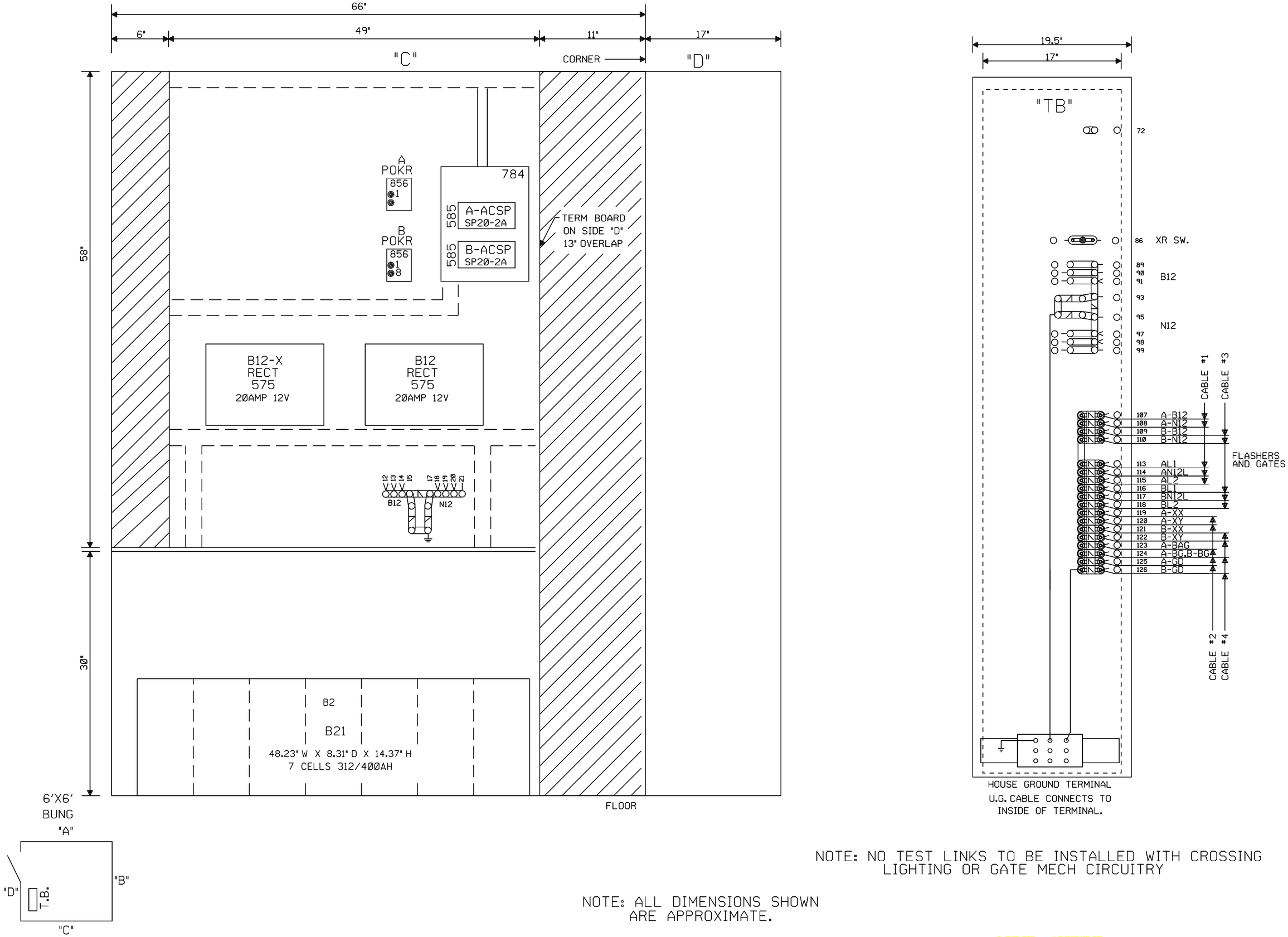

NOTE: NO TEST LINKS TO BE INSTALLED WITH CROSSING LIGHTING OR GATE MECH CIRCUITRY

NOTE: ALL DIMENSIONS SHOWN ARE APPROXIMATE.

NEW SHEET

Designed: 07/07/14 INSTALL FLASHERS W/GATES & CWT. AT TR 461 M.P. 112.50 Rec#: WO#: 25649 IS: /NBT / /SSS/JTB	MODIFICATION LEVEL Q. A. LAST LEVEL CHECKED DU LAST LEVEL MOD THIS TYPICAL DU LAST LEVEL BY DESIGNER DU CHANGED FROM TYPICAL? Y REV 01.24.11 4K GFC.9	CIRCUIT MODIFICATIONS ARE NOT TO BE MADE WITHOUT AUTHORITY FROM THE OFFICE OF SIGNAL DESIGN	Date: 07/07/14 Des: SSS Chk: NBT AFE: 25649	UNION PACIFIC RAILROAD SCHELLER, ILLINOIS TR 461 PINCKNEYVILLE SUBDIVISION Office of AVP Engineering - Signal Omaha, Nebraska	Sh.: 8 DOT 431038L MP: 112.50 ID: 127611250.8X

Minimum Program Steps Report

Location and SIN

DOT Number: 431038L
Milepost Number: 112.50
Site Name: SCHELLER, IL

SIN: 762010010016 *

* Parameter is part of office check number calculation.

MCF and Template Selection

MCF Name: GCP-T6X-02-4.mcf
MCF Revision: 24
MCFCRC: 09FC363B

Template = 1A:6 Trk Bi (OCCN) *

* Parameter is part of office check number calculation.

Minimum Program Steps

TEMPLATE: track 1-Bi, Island
Track 1 : GCP Frequency = 285 Hz (Field,TCN)
Track 1 : Approach Distance = 2516 ft (Set in Field,TCN)
Track 1 : Prime Warning Time = 30 sec (OCCN) *
Track 1 : GCP Transmit Level = Medium (Set in Field,TCN)
Track 1 : Isl Frequency = 5.9 kHz (Set in Field)

TEMPLATE: AND 1 XR
AND 1 Enable Used = Yes (OCCN) *

TEMPLATE: SSCC
SSCC 1 : Lamp Neutral Test = Off (Set in Field)
SSCC 2 : Lamp Neutral Test = Off (Set in Field)

TEMPLATE: OOS
OOS Control = OOS IPs (OCCN) *

TEMPLATE: IP assignment 1
IN 1.2 = Out Of Service IP 1 (OCCN) *

TEMPLATE: IP assignment SSCC
IN 7.1 = AND 1 XR Enable (OCCN) *

GCP: track 1
Track 1 : Island Distance = 135 ft (Set in Field,TCN)

ISLAND: track 1
Track 1 : Pickup Delay (2s +) = 2 sec (OCCN) *

ADVANCED: site options
Daylight Savings = Off (Set in Field)

* Parameter is part of office check number calculation.

Check Numbers

Office Check Number: 3AF4F021
Config. Check Number: 19AF27C6
(Based on MCF Revision 24)

Parameters not part of office check number calculation:

Track 1 : GCP Frequency = 285 Hz
Track 1 : Approach Distance = 2516 ft (Set in Field)
Track 1 : GCP Transmit Level = Medium (Set in Field)
Track 1 : Isl Frequency = 5.9 kHz
SSCC 1 : Lamp Neutral Test = Off (Set in Field)
SSCC 2 : Lamp Neutral Test = Off (Set in Field)
Track 1 : Island Distance = 135 ft (Set in Field)
Daylight Savings = Off (Set in Field)

Comments

<none>

Configuration Package File

Filename: 127611250_431038L.pac
Path: C:\Users\ODDE267\Desktop\
Date/Time: 11/18/2014 15:41:14

Program Report

Location and SIN

DOT Number: 431038L
Milepost Number: 112.50
Site Name: SCHELLER, IL

SIN: 762010010016

MCF and Template Selection

MCF Name: GCP-T6X-02-4.mcf
MCF Revision: 24
MCFCRC: 09FC363B

Template = 1A:6 Trk Bi (OCCN)

Check Numbers

Office Check Number: 30CE30C5
Config. Check Number: 01BA722C
(Based on MCF Revision 24)

Program

BASIC: module configuration
Track 1/PSO 1 Slot = Track (OCCN)
Track 2/RIO 1 Slot = Not Used (OCCN)
Track 3/PSO 2 Slot = Not Used (OCCN)
Track 4/PSO 3 Slot = Not Used (OCCN)
Track 5/RIO 2 Slot = Not Used (OCCN)
Track 6/RIO 3 Slot = Not Used (OCCN)
SSCC-1 Slot = SSCC3i (OCCN)
SSCC-2 Slot = SSCC3i (OCCN)
SEAR Used = Yes (OCCN)

BASIC: MS/GCP operation
Track 1 : MS/GCP Operation = Yes (OCCN)

BASIC: island operation
Track 1 : Island Used = Internal (OCCN)

BASIC: preemption
Preempt Logic = No (OCCN)

BASIC: radio Dax links
Radio DAX link A Used = No (OCCN)
Radio DAX link B Used = No (OCCN)

BASIC: Vital Comms links
Vital Comms link 1 Used = No (OCCN)
Vital Comms link 2 Used = No (OCCN)

PREDICTORS: track 1
Track 1 : Prime Used = Yes (OCCN)
Track 1 : Dax A Used = No (OCCN)
Track 1 : Dax B Used = No (OCCN)
Track 1 : Dax C Used = No (OCCN)
Track 1 : Dax D Used = No (OCCN)
Track 1 : Dax E Used = No (OCCN)
Track 1 : Dax F Used = No (OCCN)
Track 1 : Dax G Used = No (OCCN)

GCP: track 1
Track 1 : GCP Freq Category = Standard (Field)
Track 1 : GCP Frequency = 285 Hz (Field,TCN)
Track 1 : Approach Distance = 2445 ft (Field,TCN)
Track 1 : Uni/Bi/Sim-Bidirnl = Bidirnl (OCCN,TCN)
Track 1 : GCP Transmit Level = Medium (Field,TCN)
Track 1 : Island Connection = Isl 1 (OCCN)
Track 1 : Directionally Wired = No (OCCN)
Track 1 : Island Distance = 135 ft (Field,TCN)
Track 1 : Computed Distance = 9999 ft (Field,TCN)
Track 1 : Linearization Steps = 100 (Field,TCN)

GCP: track 1 enhanced det
Track 1 : Inbound PS Sensitivity = High (Field)
Track 1 : Speed Limiting Used = Yes (Field)
Track 1 : Outbound False Act Lvl = Normal (Field)
Track 1 : Outbound PS Timer = 20 sec (Field)
Track 1 : Trailing Switch Logic = On (Field)
Track 1 : Post Joint Detn Time = 15 sec (OCCN)
Track 1 : Adv Appr Predn = No (OCCN)
Track 1 : Cancel Pickup Delay = This Isl (OCCN)

GCP: track 1 BIDAX RX
Track 1 : BIDAX To RX Appr = Not Used (OCCN)

GCP: track 1 BIDAX TX
Track 1 : BIDAX To TX Appr = Not Used (OCCN)

GCP: track 1 prime
Track 1 : Prime Warning Time = 29 sec (OCCN)
Track 1 : Prime Offset Distance = 0 ft (Field)
Track 1 : Switch MS EZ Level = 10 (OCCN)
Track 1 : Prime MS/GCP Mode = Pred (OCCN)
Track 1 : Prime Pickup Delay = 15 sec (OCCN)
Track 1 : Prime UAX = Not Used (OCCN)

GCP: track 1 pos start
Track 1 : Positive Start = Off (OCCN)
Track 1 : Sudden Shnt Det Used = No (OCCN)
Track 1 : Low EZ Detection Used = No (OCCN)

GCP: track 1 MS Control
Track 1 : MS/GCP Ctrl IP Used = No (OCCN)
Track 1 : MS Sensitivity Level = 0 (Field)
Track 1 : Compensation Level = 1300 (Field,TCN)
Track 1 : Warn Time-Ballast Comp = High (Field,TCN)
Track 1 : Low EX Adjustment = 39 (Field)
Track 1 : Bidirn Dax Passthru = No (OCCN)
Track 1 : False Act on Train Stop = No (Field)
Track 1 : EX Limiting Used = Yes (Field)
Track 1 : EZ Correction Used = Yes (Field)

ISLAND: track 1
Track 1 : Isl Frequency = 5.9 kHz (Field)
Track 1 : Pickup Delay (2s +) = 2 sec (OCCN)
Track 1 : Isl Enable IP Used = No (OCCN)

AND: track Anding
AND 1 XR Used = Yes (OCCN)
AND 2 Used = No (OCCN)
AND 3 Used = No (OCCN)
AND 4 Used = No (OCCN)
AND 5 Used = No (OCCN)
AND 6 Used = No (OCCN)
AND 7 Used = No (OCCN)
AND 8 Used = No (OCCN)

AND: AND 1 XR
AND 1 XR Track 1 = Prime (OCCN)
AND 1 Enable Used = Yes (OCCN)
And 1 Enable Pickup = 5 sec (OCCN)
AND 1 Enable Drop = 0 sec (OCCN)
AND 1 Wrap Used = No (OCCN)

ADVANCED: MS restart
MS/GCP Restart Used = No (OCCN)

ADVANCED: out of service
OOS Control = OOS IPs (OCCN)

ADVANCED: out of service 2
T1 OOS Control = OOS Input 1 (OCCN)
T1 OOS Controls = GCP and Island (OCCN)

ADVANCED: track wrap circuits
Wrap LOS Timer = 5 sec (OCCN)
Track 1 Wrap Used = No (OCCN)

ADVANCED: trk 1 overrides
Track 1 : All Predictors Override Used = No (OCCN)

ADVANCED: OR logic
OR 1 Used = No (OCCN)
OR 2 Used = No (OCCN)
OR 3 Used = No (OCCN)
OR 4 Used = No (OCCN)

ADVANCED: internal I/O 1
Pass Thrus = No (OCCN)
Int.1 Sets = Not Used (OCCN)
Int.1 Set by = Not Used (OCCN)
Int.2 Sets = Not Used (OCCN)
Int.2 Set by = Not Used (OCCN)
Int.3 Sets = Not Used (OCCN)
Int.3 Set by = Not Used (OCCN)
Int.4 Sets = Not Used (OCCN)
Int.4 Set by = Not Used (OCCN)

ADVANCED: internal I/O 2
Int.5 Sets = Not Used (OCCN)
Int.5 Set by = Not Used (OCCN)
Int.6 Sets = Not Used (OCCN)
Int.6 Set by = Not Used (OCCN)
Int.7 Sets = Not Used (OCCN)
Int.7 Set by = Not Used (OCCN)
Int.8 Sets = Not Used (OCCN)
Int.8 Set by = Not Used (OCCN)

ADVANCED: internal I/O 3
Int.9 Sets = Not Used (OCCN)
Int.9 Set by = Not Used (OCCN)
Int.10 Sets = Not Used (OCCN)
Int.10 Set by = Not Used (OCCN)
Int.11 Sets = Not Used (OCCN)
Int.11 Set by = Not Used (OCCN)
Int.12 Sets = Not Used (OCCN)
Int.12 Set by = Not Used (OCCN)

ADVANCED: internal I/O 4
Int.13 Sets = Not Used (OCCN)
Int.13 Set by = Not Used (OCCN)
Int.14 Sets = Not Used (OCCN)
Int.14 Set by = Not Used (OCCN)
Int.15 Sets = Not Used (OCCN)
Int.15 Set by = Not Used (OCCN)
Int.16 Sets = Not Used (OCCN)
Int.16 Set by = Not Used (OCCN)

ADVANCED: site options

Daylight Savings = Off (Field)
Units = Standard (OCCN)
Maint Call Rpt IP Used = No (OCCN)
Emergency Activate IP = No (OCCN)
EZ/EX Logging = Change (Field)
EZ/EX Point Change = 3 (Field)

SSCC
Gates Used = Yes (OCCN)
SSCC1+2 GPs Coupled = Yes (OCCN)
Min Activation = 0 sec (OCCN)
Rmt Activation Cancel = 2 min (OCCN)
Bell On Gate Rising = No (OCCN)
Mute Bell On Gate Down = No (OCCN)
SSCCIV Controller Used = No (OCCN)

SSCC: 1
SSCC-1 Activation = AND 1 XR (OCCN)
SSCC-1 Gate Delay = 4 sec (OCCN)
SSCC-1 Number of GPs = 1 (OCCN)
SSCC-1 Number of GDs = 2 (OCCN)
SSCC 1 : Flash Rate = 50 (OCCN)
SSCC 1 : Low Battery Detection = No (Field)
SSCC 1 : Flash Sync = master (OCCN)
SSCC 1 : Invert Gate Output = No (OCCN)
SSCC 1 : Lamp Neutral Test = Off (Field)
Aux-1 Xng Ctrl Used = No (OCCN)

SSCC: 2
SSCC-2 Activation = AND 1 XR (OCCN)
SSCC-2 Gate Delay = 4 sec (OCCN)
SSCC-2 Number of GPs = 0 (OCCN)
SSCC-2 Number of GDs = 0 (OCCN)
SSCC 2 : Flash Rate = 50 (OCCN)
SSCC 2 : Low Battery Detection = No (Field)
SSCC 2 : Flash Sync = slave (OCCN)
SSCC 2 : Invert Gate Output = No (OCCN)
SSCC 2 : Lamp Neutral Test = Off (Field)
Aux-2 Xng Ctrl Used = No (OCCN)

OUTPUT: assignment page 1
OUT 1.1 = Not Used (OCCN)
OUT 1.2 = Not Used (OCCN)

INPUT: assignment page 1
IN 1.1 = Not Used (OCCN)
IN 1.2 = Out Of Service IP 1 (OCCN)

IO: assignment SSCC
OUT GC 1 = Gate Output 1 (OCCN)
OUT GC 2 = Gate Output 2 (OCCN)
IN 7.1 = AND 1 XR Enable (OCCN)
IN 7.2 = GD 1.2 (OCCN)
IN 7.3 = Not Used (OCCN)
IN 7.4 = GD 1.1 (OCCN)
IN 7.5 = GP 1.1 (OCCN)
IN 8.1 = Not Used (OCCN)
IN 8.2 = Not Used (OCCN)
IN 8.3 = Not Used (OCCN)
IN 8.4 = Not Used (OCCN)
IN 8.5 = Not Used (OCCN)

SEAR
SEAR Subnode = 99 (OCCN)
DI 1 = Not Used (OCCN)
DI 2 = Not Used (OCCN)
Rly 1 = Not Used (OCCN)
Rly 2 = Not Used (OCCN)

SEAR: inputs
SP 2.1 = POK 1 (OCCN)
SP 3.1 = Not Used (OCCN)
SP 4.1 = Not Used (OCCN)
SP 5.1 = Not Used (OCCN)
SP 6.1 = Not Used (OCCN)

SEAR: slot 1-4 inputs
IN 1.1 = Not Used (OCCN)
IN 2.1 = Not Used (OCCN)
IN 2.2 = Not Used (OCCN)
IN 3.1 = Not Used (OCCN)
IN 3.2 = Not Used (OCCN)
IN 4.1 = Not Used (OCCN)
IN 4.2 = Not Used (OCCN)

SEAR: inputs slot 5
IN 5.1 = Not Used (OCCN)
IN 5.2 = Not Used (OCCN)

SEAR: inputs slot 6
IN 6.1 = Not Used (OCCN)
IN 6.2 = Not Used (OCCN)

SEAR: slot 7-8 inputs
IN 7.3 = Not Used (OCCN)
IN 8.1 = Not Used (OCCN)
IN 8.2 = Not Used (OCCN)
IN 8.3 = Not Used (OCCN)

IN 8.4 = Not Used (OCCN)
IN 8.5 = Not Used (OCCN)

SITE: programming
Radio Subnode = 1 (Field)
Field Password = Off (OCCN)
Low Battery Enabled = Off (Field)

Configuration Package File

Filename: 127611250_431038L.pac
Path: U:\UP_Projects\25649_SchellerIL_TR 461\Locations\112.50 TR 461 ALL NEW\program\
Date/Time: 10/31/2014 7:46:38