INDEX

CONTENTS

SH. NO.		REVISION NO. 1	2	3	4	5	6	7	8	9
I01	INDEX AND REVISIONS	⧄								
S01	TRACK AND SIGNAL PLAN	⧄								
P01	MINIMUM PROGRAM STEPS REPORT CWE-80	⧄								
E01	POWER DISTRIBUTION	⧄								
E02	RELAY RACK 1 LAYOUT	⧄								
C01	DETECTION DEVICE CONSIST CWE-80	⧄								
C02	DETECTION DEVICE CONSIST CWE-80	⧄								
C03	DETECTION CIRCUITRY CWE-80	⧄								
C04	DETECTION CIRCUITRY CWE-80	⧄								
C05	DETECTION CIRCUITRY CWE-80	⧄								
C06	CROSSING WARNING DEVICE GATE CIRCUITRY	⧄								
C07	CROSSING WARNING DEVICE LIGHT CIRCUITRY	⧄								
C08	CROSSING WARNING DEVICE CIRCUITRY	⧄								
C09	SEAR II1 CONFIGURATION & FUNCTIONS	⧄								

⧄ = PLANS SENT TO FIELD (DISTRIBUTED)

⧅ = PLANS AS-IN-SERVICED (UP TO DATE)

= NOTE

REVISIONS

REV. NO.	PROJECT NO.	DESIGN DATE	IN SERVICE DATE	REVISION DATE
1	IL2014024A	08-18-14		

TO BE COMPLETED ON A.I.S.

CSX TRANSPORTATION

RAIL TRANSPORT GROUP ENGINEERING
COMMUNICATIONS AND SIGNALS

KING ROAD (546513J)

INDEX AND REVISIONS
SMITHBORO, IL M.P. OS-184.80

4000GCP.I01
REV. 03-31-06

DESIGNED	DIGITIZED	CHECKED	DATE
XRL	XRL	XRL	08-18-14

DESIGN DATE	REV. NO.	DRAWING	SHEET NO	FILE	SHEET
08-18-14	1	-----	-----	-----	I01

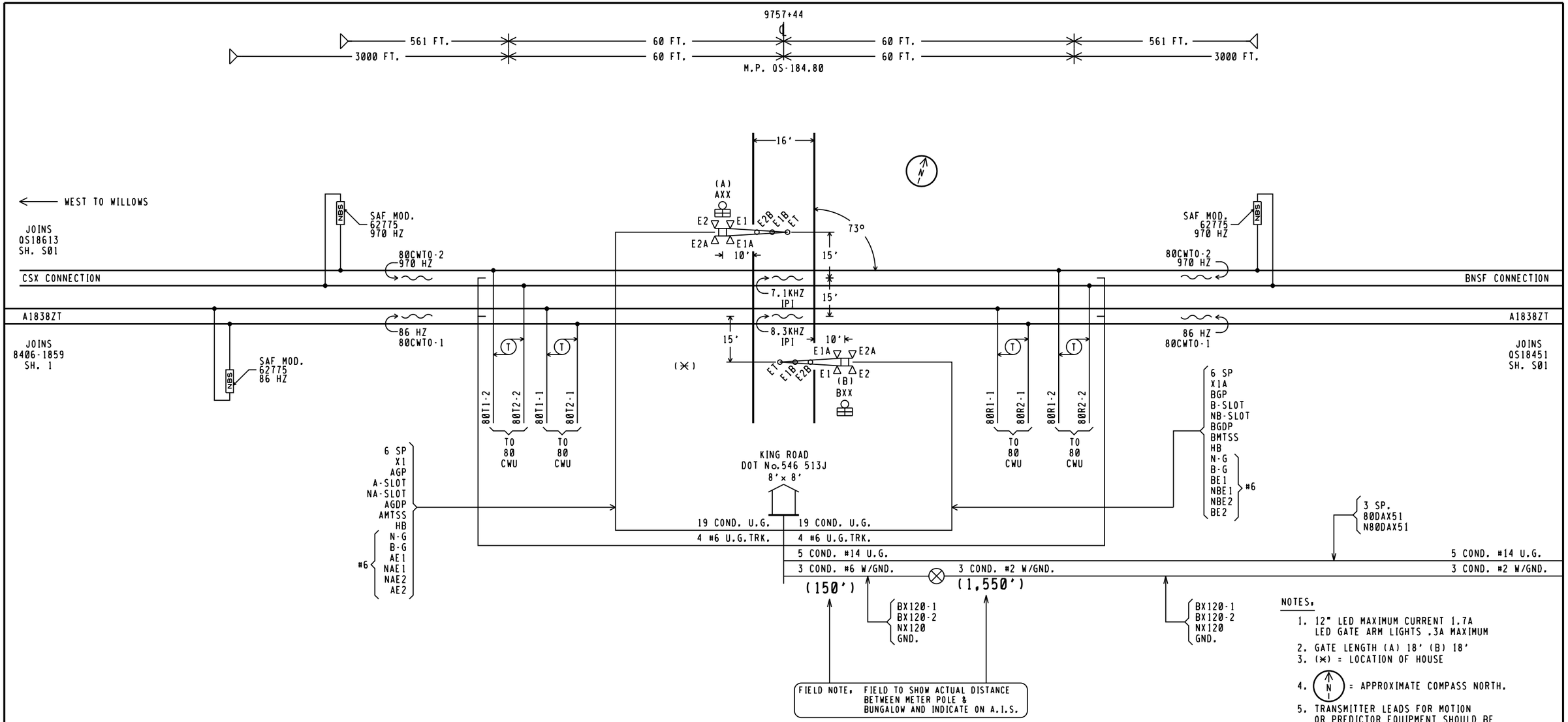

NOTES,

1. 12" LED MAXIMUM CURRENT 1.7A
   LED GATE ARM LIGHTS .3A MAXIMUM
2. GATE LENGTH (A) 18' (B) 18'
3. (✳) = LOCATION OF HOUSE
4. (N) = APPROXIMATE COMPASS NORTH.
5. TRANSMITTER LEADS FOR MOTION OR PREDICTOR EQUIPMENT SHOULD BE CONNECTED ON THE BUNGALOW OR SHORT LEAD SIDE OF THE CROSSING.
6. ISLAND TRACK LEADS SHOULD BE CONNECTED 50 FEET FROM ROAD EDGE BUT ON NARROW ROADS (20' OR LESS) ISLAND LENGTH SHALL BE 120 FEET.
7. WARNING SYSTEM APPROACH CIRCUIT DISTANCES ARE TO BE MEASURED FROM THE ISLAND TRACK CONNECTIONS.

( ) = NOTE

APPROACH LENGTHS TABLE DC, AFO, TYPE C, MOTION, CWT, OR OTHER	WESTWARD TRACK 1 CWT	EASTWARD TRACK 1 CWT	WESTWARD TRACK 2 MOT	EASTWARD TRACK 2 MOT
STANDARD MINIMUM WARNING TIME IN SECONDS	20	20	20	20
ROADWAY GATE TIME IN SECONDS	5	5	5	5
CLEARANCE TIME IN SECONDS	3	32	3	3
DOT TRAFFIC LIGHT SIMULTANEOUS PREEMPT TIME IN SECONDS ✳	0	0	0	0
DESIGNED WARNING TIME FOR TRAINS AT TIME TABLE SPEED	28 SEC.	28 SEC.	28 SEC.	28 SEC.
DOT TRAFFIC LIGHT ADVANCE PREEMPT TIME IN SECONDS ✳	0	0	0	0
CONTROL EQUIPMENT DECISION TIME IN SECONDS	5	5	5	5
DESIGNED DETECTION TIME FOR TRAINS AT TIME TABLE SPEED	33 SEC.	33 SEC.	33 SEC.	33 SEC.
TIME TABLE MAXIMUM TRAIN SPEED IN MILES PER HOUR	60	60	10	10
BUFFER SPEED IN MILES PER HOUR	5	5	2.5	2.5
TOTAL WARNING SYSTEM DESIGN SPEED IN MILES PER HOUR	65	65	12.5	12.5
APPROACH DISTANCE TO ISLAND EDGE IN FEET	3000	3000	561	561
HALF WIDTH OF ISLAND IN FEET	60	60	60	60
APPROXIMATE MILE POSTS FOR APPROACH CIRCUIT	185.38	184.22	184.92	184.68

✳AUTHORIZING AGENCY, NONE
✳DATE OF REQUIREMENT, NONE
✳AMOUNT OF TIME (SEC.), NONE

CSX TRANSPORTATION
RAIL TRANSPORT GROUP ENGINEERING
COMMUNICATIONS AND SIGNALS

KING ROAD (546513J)

TRACK AND SIGNAL PLAN
SMITHBORO, IL M.P. QS-184.80

4000GCP.S01
REV. 11-30-08

DESIGNED	DIGITIZED	CHECKED	DATE
XRL	XRL	XRL	08-18-14

DESIGN DATE	REV. NO.	DRAWING	SHEET NO	FILE	SHEET
08-18-14	1	-----	-----	-----	S01

Minimum Program Steps Report

Location and SIN

DOT Number: 546513J
Milepost Number: QS-184.80
Site Name: King Road

SIN: 712541202016 *

* Parameter is part of office check number calculation.

MCF and Template Selection

MCF Name: GCP-T6X-02-1.mcf
MCF Revision: 021
MCFCRC: 6076E435

Template = 1A:6 Trk Bi *

* Parameter is part of office check number calculation.

Minimum Program Steps

TEMPLATE: module configuration
Track 2/RIO 1 Slot = Track *

TEMPLATE: track 1-Bi, Island
Track 1 : GCP Frequency = 86 Hz
Track 1 : Approach Distance = 3000 ft
Track 1 : Prime Warning Time = 27 sec
Track 1 : Prime UAX = IP *
Track 1 : GCP Transmit Level = High
Track 1 : Isl Frequency = 8.3 kHz

TEMPLATE: track 2-Bi, Island
Track 2 : GCP Frequency = 970 Hz
Track 2 : Approach Distance = 561 ft
Track 2 : GCP Transmit Level = Medium (Set in Field)
Track 2 : Isl Frequency = 7.1 kHz

TEMPLATE: SSCC
SSCC-1 Number of GDs = 1 *
SSCC-2 Number of GPs = 1 *
SSCC-2 Number of GDs = 1 *
SSCC 1 : Lamp Neutral Test = Off (Set in Field)
SSCC 2 : Lamp Neutral Test = Off (Set in Field)

TEMPLATE: OOS
OOS Control = Display+OOS IPs *
T2 OOS Control = OOS Input 1 *

TEMPLATE: IP assignment 1
IN 1.1 = T1 Prime UAX *

TEMPLATE: IP assignment SSCC
IN 7.2 = Not Used *
IN 8.2 = Out Of Service IP 1 *
IN 8.4 = GD 2.1 *
IN 8.5 = GP 2.1 *

GCP: track 1
Track 1 : Island Distance = 120 ft *

GCP: track 2
Track 2 : Island Distance = 120 ft *

GCP: track 2 prime
Track 2 : Prime MS/GCP Mode = MS *

ADVANCED: site options
Daylight Savings = On *

SSCC: 1
SSCC-1 Gate Delay = 5 sec *
SSCC 1 : Flash Rate = 55 *

SSCC: 2
SSCC-2 Gate Delay = 5 sec *
SSCC 2 : Flash Rate = 55 *

SEAR
DI 1 = Gnd Flt Tester 1 *
DI 2 = Gnd Flt Tester 2 *
Rly 1 = Ground Fault Test *
Rly 2 = AC Control *

SEAR: slot 7-8 inputs
IN 7.1 = TSS 1 *
IN 8.1 = TSS 2 *
IN 8.3 = POK 2 *

* Parameter is part of office check number calculation.

Check Numbers

Office Check No. (DT 4.6.0): 2A276E9D
Office Check Number: 2A276E9D
Config. Check Number: 1A51E617
(Based on MCF Revision 021)

Parameters not part of office check number calculation:

Track 1 : GCP Frequency = 86 Hz
Track 1 : Approach Distance = 3000 ft
Track 1 : Prime Warning Time = 27 sec
Track 1 : GCP Transmit Level = High
Track 1 : Isl Frequency = 8.3 kHz
Track 2 : GCP Frequency = 970 Hz
Track 2 : Approach Distance = 561 ft
Track 2 : GCP Transmit Level = Medium (Set in Field)
Track 2 : Isl Frequency = 7.1 kHz
SSCC 1 : Lamp Neutral Test = Off (Set in Field)
SSCC 2 : Lamp Neutral Test = Off (Set in Field)

Comments

<none>

Configuration Package File

Filename: Config-546513J.pac
Path: C:ZSafetranZDTZtempZ
Date/Time: 10/06/2014 11:42:01
DT Version: 4.7.5

CSX TRANSPORTATION
RAIL TRANSPORT GROUP ENGINEERING
COMMUNICATIONS AND SIGNALS

KING ROAD (546513J)

MINIMUM PROGRAM STEPS REPORT CWE-80
SMITHBORO, IL M.P. QS-184.80

4000GCP.P01
REV. 06-30-09

DESIGNED	DIGITIZED	CHECKED	DATE
XRL	XRL	XRL	08-18-14

DESIGN DATE	REV. NO.	DRAWING	SHEET NO	FILE	SHEET
08-18-14	1	-----	-----	-----	P01

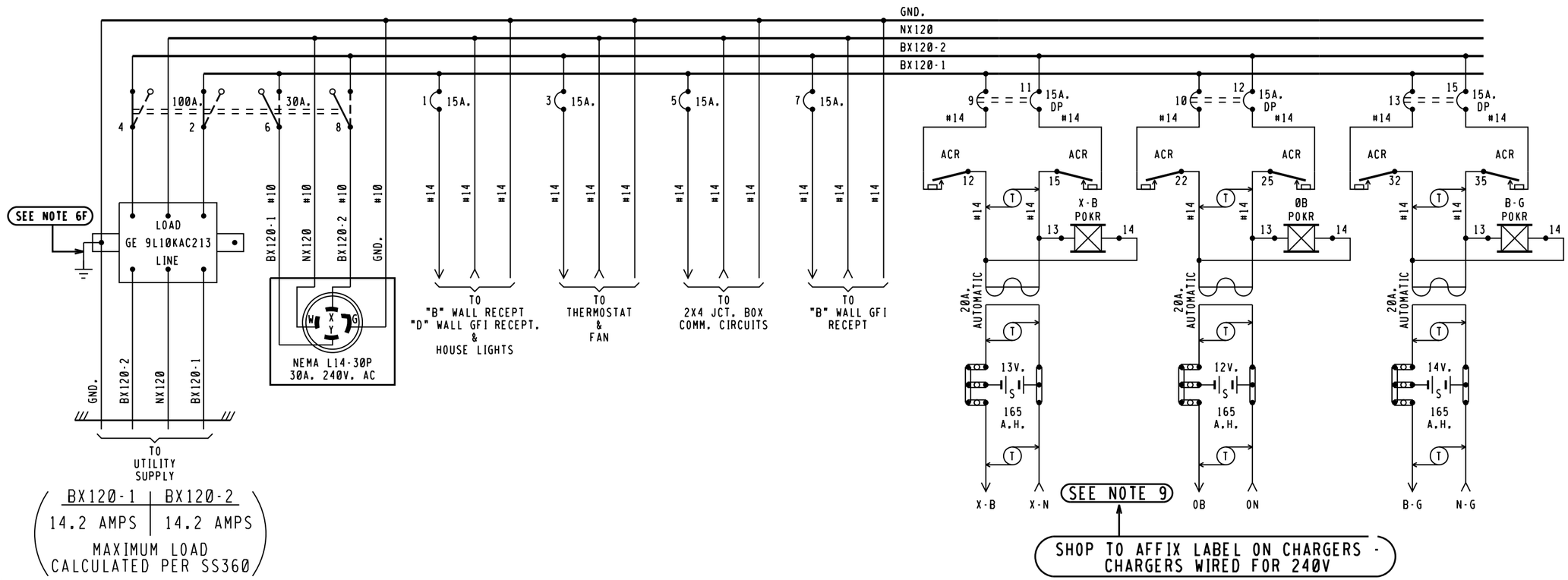

BX120-1	BX120-2
14.2 AMPS	14.2 AMPS

MAXIMUM LOAD
CALCULATED PER SS360

NOTES:

1 - REFERENCES ARE PER SCMS-13.
2 - ARRESTERS ARE PER SS382.
3 - SHELF RELAY PLACEMENT ON CONSIST CHART HAS NO SIGNIFICANCE.
4 - PLUG-IN RELAYS ARE VIEWED FROM THE FRONT OF RACK.
5 - BATTERY A.H. CAPACITY SHOWN IS THE MINIMUM REQUIREMENT.
6 - WIRING
  A - FEED TO ALL BUSSES, LIGHT CIRCUITS,MOTOR CIRCUITS TO BE #10 FLEX.
  B - 120-VOLT FEED FROM ENTRANCE TO POWER BUSS TO BE #10 FLEX.
  C - ALL TRACK WIRES TO BE #10 FLEX.
  D - ALL OTHERS TO BE #16 FLEX UNLESS NOTED.
  E - ALL BATTERY OUTPUTS TO BE #6 PER SS360.
  F - GROUND WIRE NOT NECESSARY WHEN GE ARRESTER IS MOUNTED ON GROUND PLANE OR METAL ENCLOSURE AFFIXED DIRECTLY TO BUNGALOW METALLIC STRUCTURAL MEMBER.
7 - CIRCUIT INTERRUPTERS 2 & 4 ARE MECHANICALLY INTERLOCKED WITH CIRCUIT INTERRUPTERS 6 & 8.
8 - CHARGERS TO BE WIRED FOR 240VAC
9 - CIRCUIT BREAKER PANEL - 00124L125G (24 SPACES)

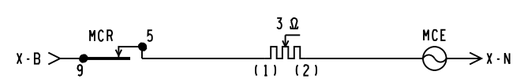

= NOTE

8'X 8' RELAY HOUSE W/FARADAY SHIELD

CSX TRANSPORTATION
RAIL TRANSPORT GROUP ENGINEERING
COMMUNICATIONS AND SIGNALS

KING ROAD (546513J)

POWER DISTRIBUTION
SMITHBORO, IL M.P. QS-184.80

4000GCP.E01
REV. 11-30-08

DESIGNED	DIGITIZED	CHECKED	DATE
XRL	XRL	XRL	08-18-14

DESIGN DATE	REV. NO.	DRAWING	SHEET NO	FILE	SHEET
08-18-14	1	-----	-----	-----	E01

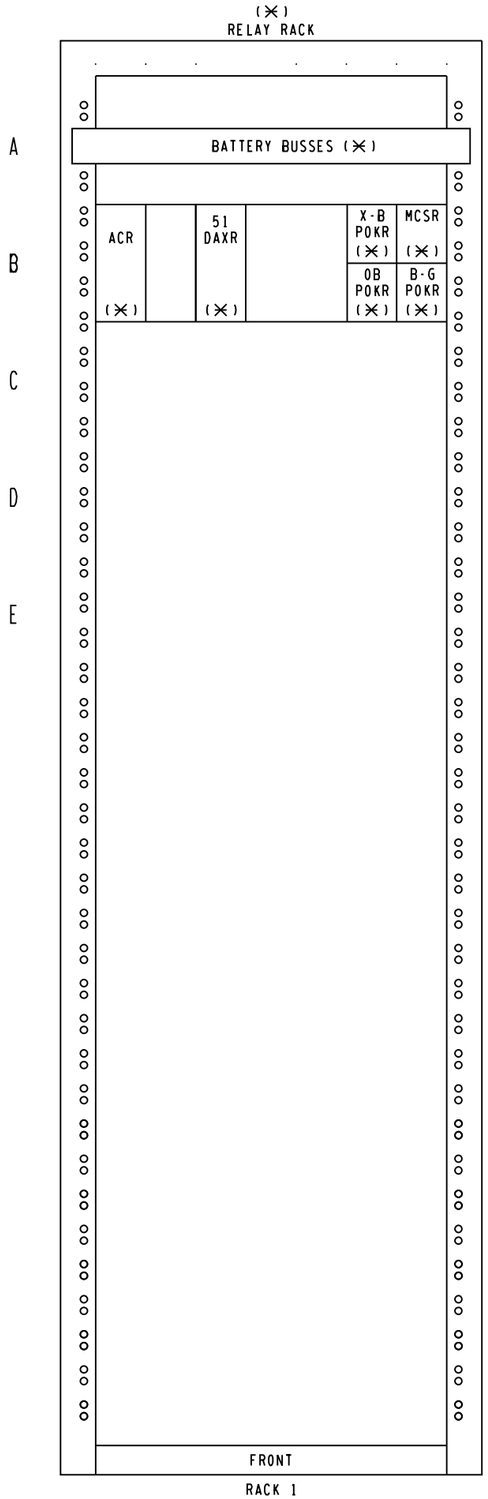

RELAYS AND RACK WIRED AND SUPPLIED BY RAILROAD

RELAY RACK (RACK XX)

ROW B

ACR			51DAXR			X-B POKR			MCSR		
12	B	B77	12		B8	9		N66	9	F	N41
15	B	C30	15		C30	10	F	C48	10		C48
22	B		22			11	F	C49	11		C49
25	B		23	F		12			12		
32	B		25	F							
35	B		32								
			35								

OB POKR			B-G POKR		
9		N66	9		N66
10	F	C48	10	F	C48
11	F		11	F	
12			12		

EQUIPMENT RACK 84" X 19"			
REF.	DESCRIPTION	CSX ITEM NO.	QTY
---	ASSY RACK 19" CSX	020-0065621-1	1 EA.
B	BAR MTG 19" W/BLU PAINT	020-3471120-1	3 EA.
B	TIE BAR RELAY 19" W/BLU PAINT	020-3471121-1	2 EA.
B	RLY B1 PLBD KIT	020-0022651-1	2 EA.
B	SOCKET RLY 4 POLE SCREW	020-0056514-1	4 EA.
B	PNL B1 W/2 PB RELAY MTG.	020-0064060-1	2 EA.
B	RLY 160 OHM 4PDT 12VDC	020-0055602-1	1 EA.
B	RLY 12K OHM 4PDT 240VAC	020-2901192-1	3 EA.

NOTES:

1. 19" RACK ASSEMBLY INCLUDES 3 MOUNTING BARS AND 2 TIE BARS, AND ARE INCLUDED IN THE QTY.
2. (✕) = SUPPLIED BY RAILROAD.

= NOTE

CSX TRANSPORTATION
RAIL TRANSPORT GROUP ENGINEERING
COMMUNICATIONS AND SIGNALS

KING ROAD (546513J)

RELAY RACK 1 LAYOUT

SMITHBORO, IL M.P. QS-184.80

RLYRACK.E01XING
REV. 08-20-14

DESIGNED	DIGITIZED	CHECKED	DATE
XRL	XRL	XRL	08-18-14

DESIGN DATE	REV. NO.	DRAWING	SHEET NO	FILE	SHEET
08-18-14	1	.....	.....	.....	E02

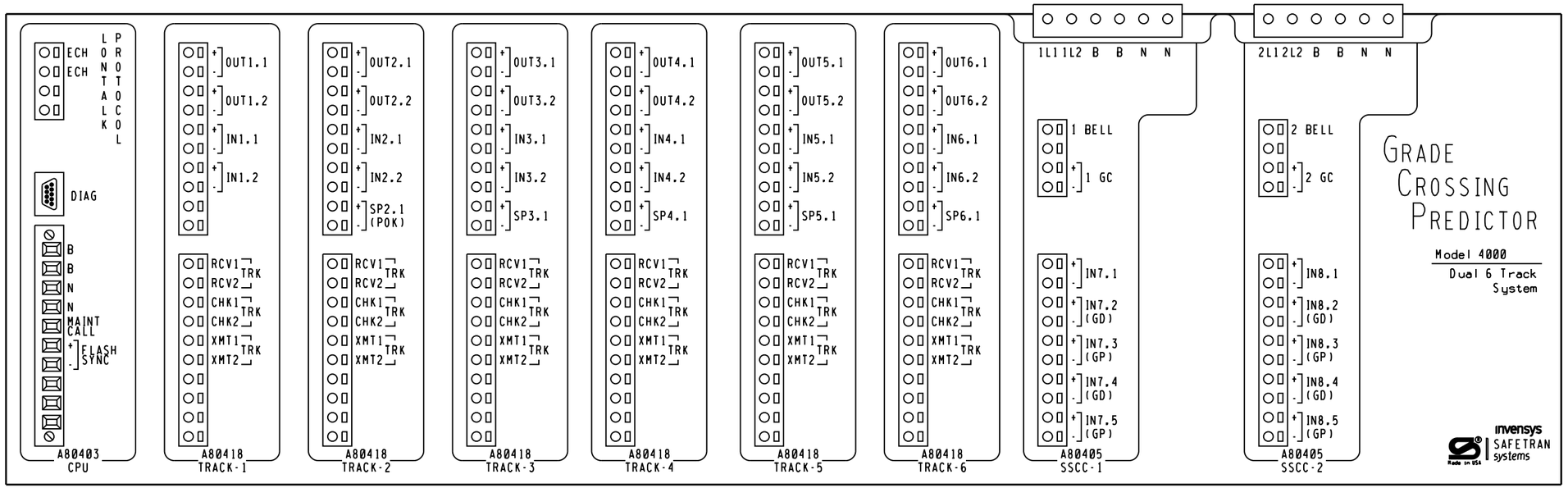

CSX TRANSPORTATION

RAIL TRANSPORT GROUP ENGINEERING
COMMUNICATIONS AND SIGNALS

KING ROAD (546513J)

DETECTION DEVICE CONSIST CWE-80
SMITHBORO, IL M.P. OS-184.80

DESIGNED	DIGITIZED	CHECKED	DATE
XRL	XRL	XRL	08-18-14

DESIGN DATE	REV. NO.	DRAWING	SHEET NO	FILE	SHEET
08-18-14	1	-----	-----	-----	C01

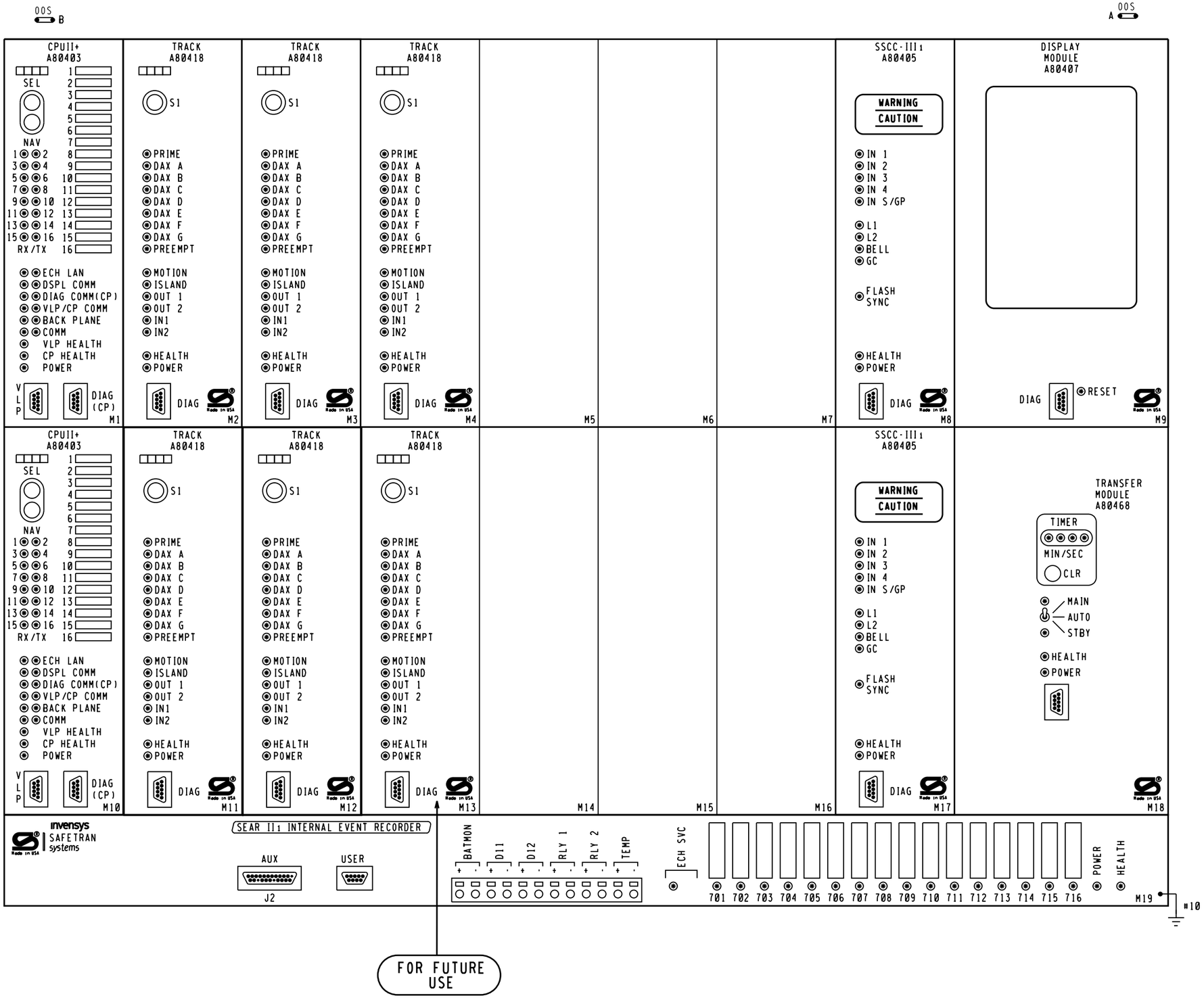

GCP 4000 APPLICATION NOTES.

1. THE GRADE CROSSING PREDICTOR (GCP) IS A MODULAR MICROPROCESSOR CONTROLLED SYSTEM THAT IS DEPLOYED TO CONTINUALLY MONITOR THE APPROACHES TO RAILROAD GRADE CROSSINGS AND TO CONTROL THE LAMPS, GATES AND BELLS ASSOCIATED WITH THOSE CROSSINGS. WHEN EQUIPPED WITH THE SEAR II1 MODULE THE GCP 4000 WILL RECORD EVENTS AND REPORT ALARMS WHEN CONNECTED TO AN OFFICE SYSTEM.

2. THE GCP 4000 GCP (A80460) IS A SIX TRACK REDUNDANT UNIT CAPABLE OF DRIVING 4 INDEPENDENT FLASHER AND GATE SIGNALS AND RECORDING EVENTS AND REPORTING ALARMS. THE STANDARD A80460 INCLUDES THE FOLLOWING MODULES.

SLOT	MODULE	FUNCTION	PART NO.
M1	CPU-II+	MAIN	A80403
M2	TRACK-1	MAIN	A80418
M3	TRACK-2	MAIN	A80418
M4	TRACK-3	MAIN	A80418
M5	PANEL	NONE	D39325
M6	PANEL	NONE	D39325
M7	PANEL	NONE	D39325
M8	SSCC-III1	1L	A80405
M9	DISPLAY MODULE		A80407
M10	CPU-II+	STANDBY	A80403
M11	TRACK-1	STANDBY	A80418
M12	TRACK-2	STANDBY	A80418
M13	TRACK-3	STANDBY	A80418
M14	PANEL	NONE	D39325
M15	PANEL	NONE	D39325
M16	PANEL	NONE	D39325
M17	SSCC-III1	2L	A80405
M18	TRANSFER UNIT		A80406
M19	SEAR II1	RECORDER	A80410

OPTIONAL MODULES.
RIO MODULE A80413

3. EACH TRACK MODULE HAS TWO PROGRAMMABLE INPUTS AND TWO PROGRAMABLE OUTPUTS.

4. THE SEAR II1 INTERNAL EVENT RECORDER HAS INPUTS FOR ONE BATTERY MONITOR, TWO NON-VITAL INPUTS AND TWO PROGRAMMABLE RELAY DRIVES (HEEL/FRONT).

5. LOCATED ON THE FRONT OF EACH MODULE THERE ARE LED LIGHTS TO INDICATE THE ACTIVITY OF CERTAIN FUNCTIONS OCCURRING INSIDE THE GCP.

6. BETWEEN SLOT 1 & 2 THERE IS A CHASSIS IDENTIFICATION CHIP (CIC) SOCKET AND A ECD CONNECTOR (DB-25 FEMALE).

7. UPON THE FAILURE OF A MODULE IN SLOTS M1-M7 THE AUTOMATIC TRANSFER UNIT SWITCHES TO THE STANDBY MODULES IN SLOTS M10-M16.

CSX TRANSPORTATION
RAIL TRANSPORT GROUP ENGINEERING
COMMUNICATIONS AND SIGNALS

KING ROAD (546513J)

DETECTION DEVICE CONSIST CWE-80
SMITHBORO, IL M.P. QS-184.80

DESIGNED	DIGITIZED	CHECKED	DATE
XRL	XRL	XRL	08-18-14

DESIGN DATE	REV. NO.	DRAWING	SHEET NO	FILE	SHEET
08-18-14	1	-----	-----	-----	C02

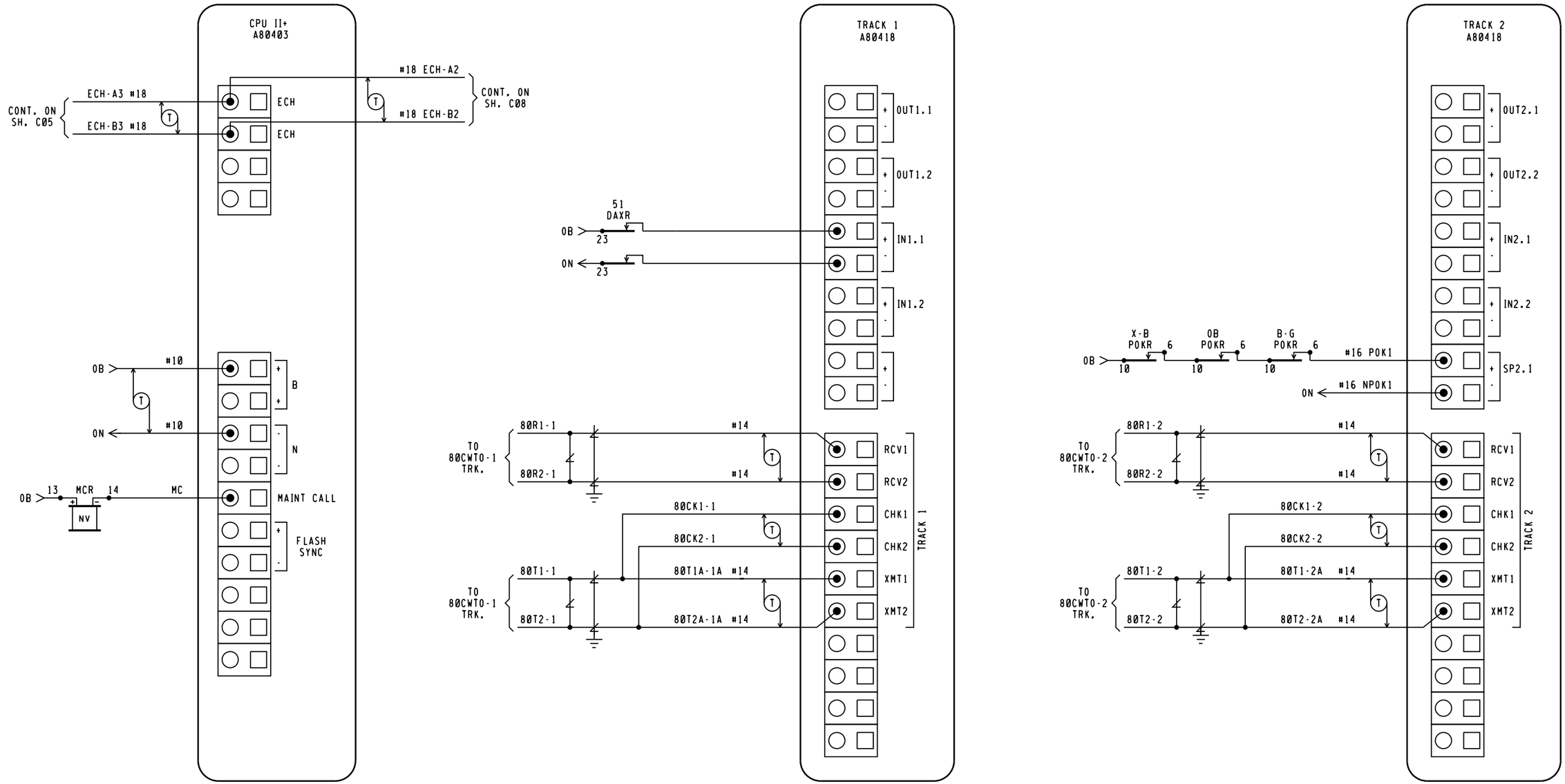

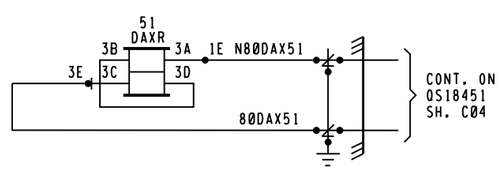

NOTE:

ECHELON CONNECTIONS NOT TO EXCEED 53' IN LENGTH AND TOTAL LENGTH COMBINED NOT TO EXCEED 430' WITH A MAXIMUM OF 8 NODES. RECOMMEND USE BELDEN WIRE CABLE #8461 OR EQUIVALENT.

CSX TRANSPORTATION

RAIL TRANSPORT GROUP ENGINEERING
COMMUNICATIONS AND SIGNALS

KING ROAD (546513J)

DETECTION CIRCUITRY CWE-80
SMITHBORO, IL M.P. OS-184.80

4000GCP.C03
REV. 11-30-08

DESIGNED	DIGITIZED	CHECKED	DATE
XRL	XRL	XRL	08-18-14

DESIGN DATE	REV. NO.	DRAWING	SHEET NO	FILE	SHEET
08-18-14	1	-----	-----	-----	C03

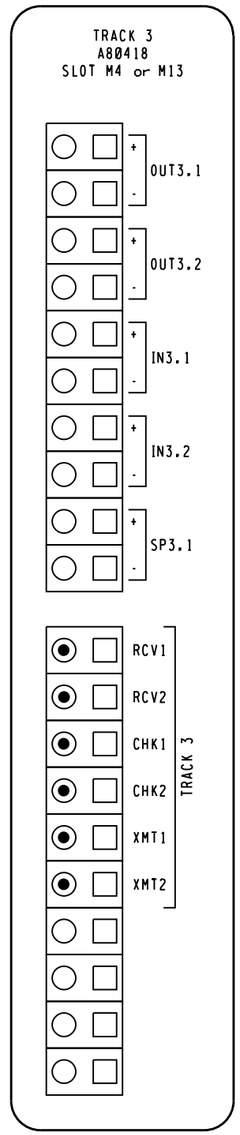

NOTE:

ECHELON CONNECTIONS NOT TO EXCEED 53' IN LENGTH AND TOTAL LENGTH COMBINED NOT TO EXCEED 430' WITH A MAXIMUM OF 8 NODES. RECOMMEND USE BELDEN WIRE CABLE #8461 OR EQUIVALENT.

4000GCP6TK.C05
SWE REV. 03-10-06

CSX TRANSPORTATION
RAIL TRANSPORT GROUP ENGINEERING
COMMUNICATIONS AND SIGNALS

KING ROAD (546513J)

DETECTION CIRCUITRY CWE-80
SMITHBORO, IL M.P. QS-184.80

DESIGNED	DIGITIZED	CHECKED	DATE
XRL	XRL	XRL	08-18-14

DESIGN DATE	REV. NO.	DRAWING	SHEET NO	FILE	SHEET
08-18-14	1	-----	-----	-----	C04

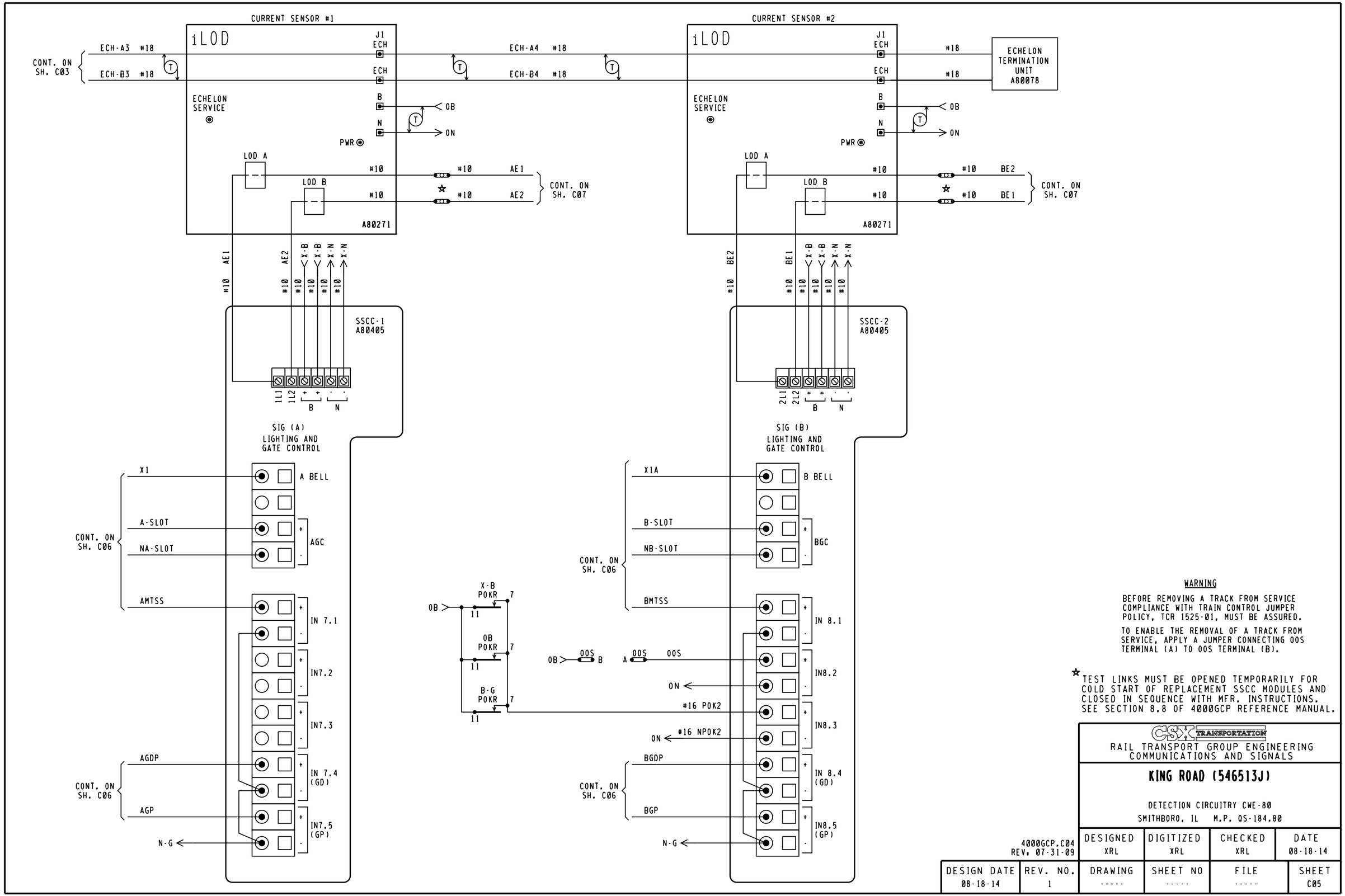

WARNING

BEFORE REMOVING A TRACK FROM SERVICE COMPLIANCE WITH TRAIN CONTROL JUMPER POLICY, TCR 1525-01, MUST BE ASSURED.

TO ENABLE THE REMOVAL OF A TRACK FROM SERVICE, APPLY A JUMPER CONNECTING 00S TERMINAL (A) TO 00S TERMINAL (B).

☆ TEST LINKS MUST BE OPENED TEMPORARILY FOR COLD START OF REPLACEMENT SSCC MODULES AND CLOSED IN SEQUENCE WITH MFR. INSTRUCTIONS. SEE SECTION 8.8 OF 4000GCP REFERENCE MANUAL.

CSX TRANSPORTATION

RAIL TRANSPORT GROUP ENGINEERING
COMMUNICATIONS AND SIGNALS

KING ROAD (546513J)

DETECTION CIRCUITRY CWE-80

SMITHBORO, IL M.P. QS-184.80

4000GCP.C04
REV. 07-31-09

DESIGNED	DIGITIZED	CHECKED	DATE
XRL	XRL	XRL	08-18-14

DESIGN DATE	REV. NO.	DRAWING	SHEET NO	FILE	SHEET
08-18-14	1	-----	-----	-----	C05

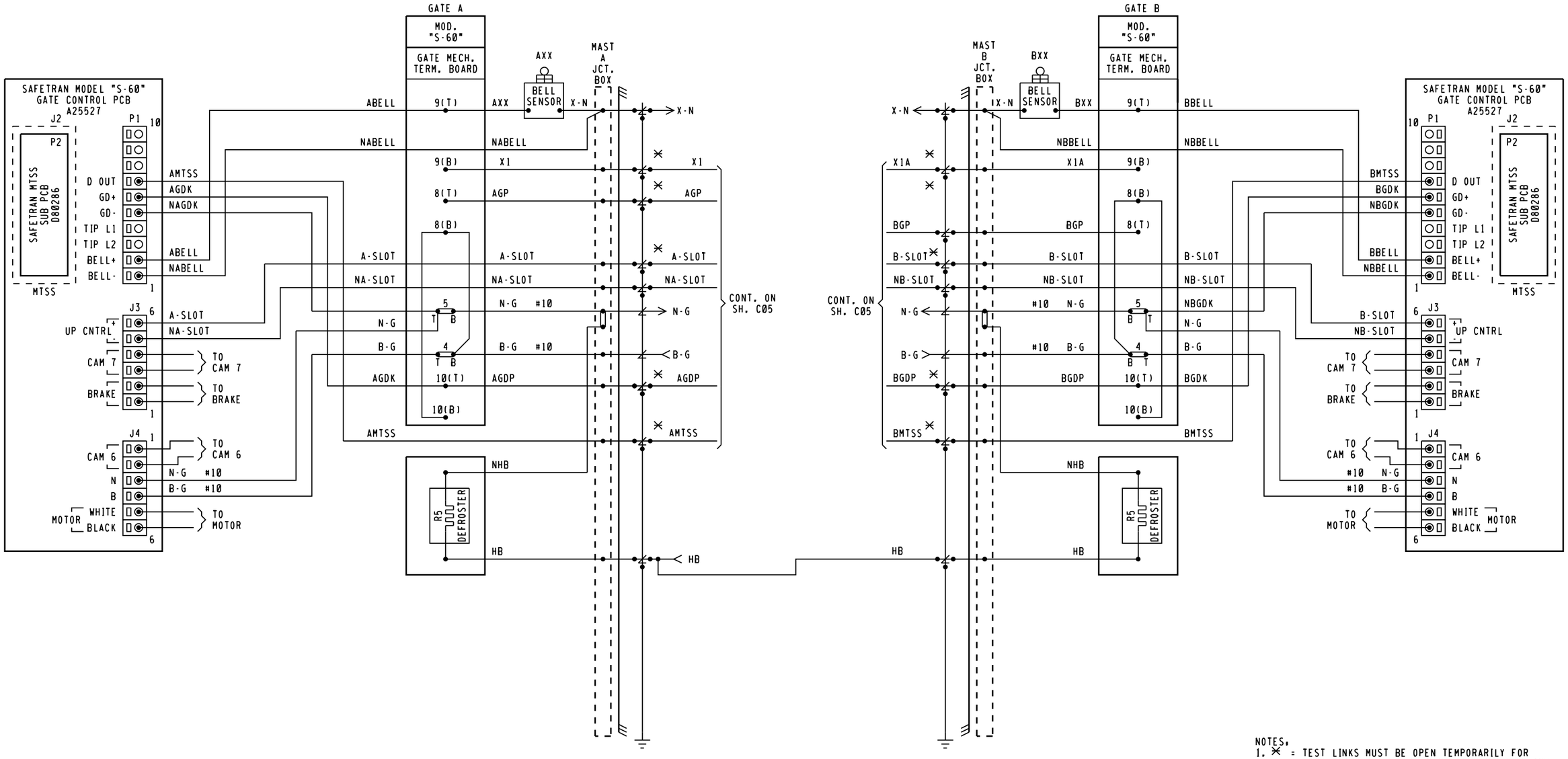

NOTES.
1. ✕ = TEST LINKS MUST BE OPEN TEMPORARILY FOR COLD START OF REPLACEMENT SSCC MODULES AND AND CLOSED IN SEQUENCE WITH MFR. INSTRUCTIONS. SEE SECTION 8.8 OF 4000GCP REFERENCE MANUAL.
2. = TERMINAL IN JCT. BOX BASE
3. ALL WIRING #16 UNLESS NOTED OTHERWISE.

CSX TRANSPORTATION
RAIL TRANSPORT GROUP ENGINEERING
COMMUNICATIONS AND SIGNALS

KING ROAD (546513J)

CROSSING WARNING DEVICE GATE CIRCUITRY
SMITHBORO, IL M.P. OS-184.80

4000GCP.C05
REV. 07-31-09

DESIGNED	DIGITIZED	CHECKED	DATE
XRL	XRL	XRL	08-18-14

DESIGN DATE	REV. NO.	DRAWING	SHEET NO	FILE	SHEET
08-18-14	1	-----	-----	-----	C06

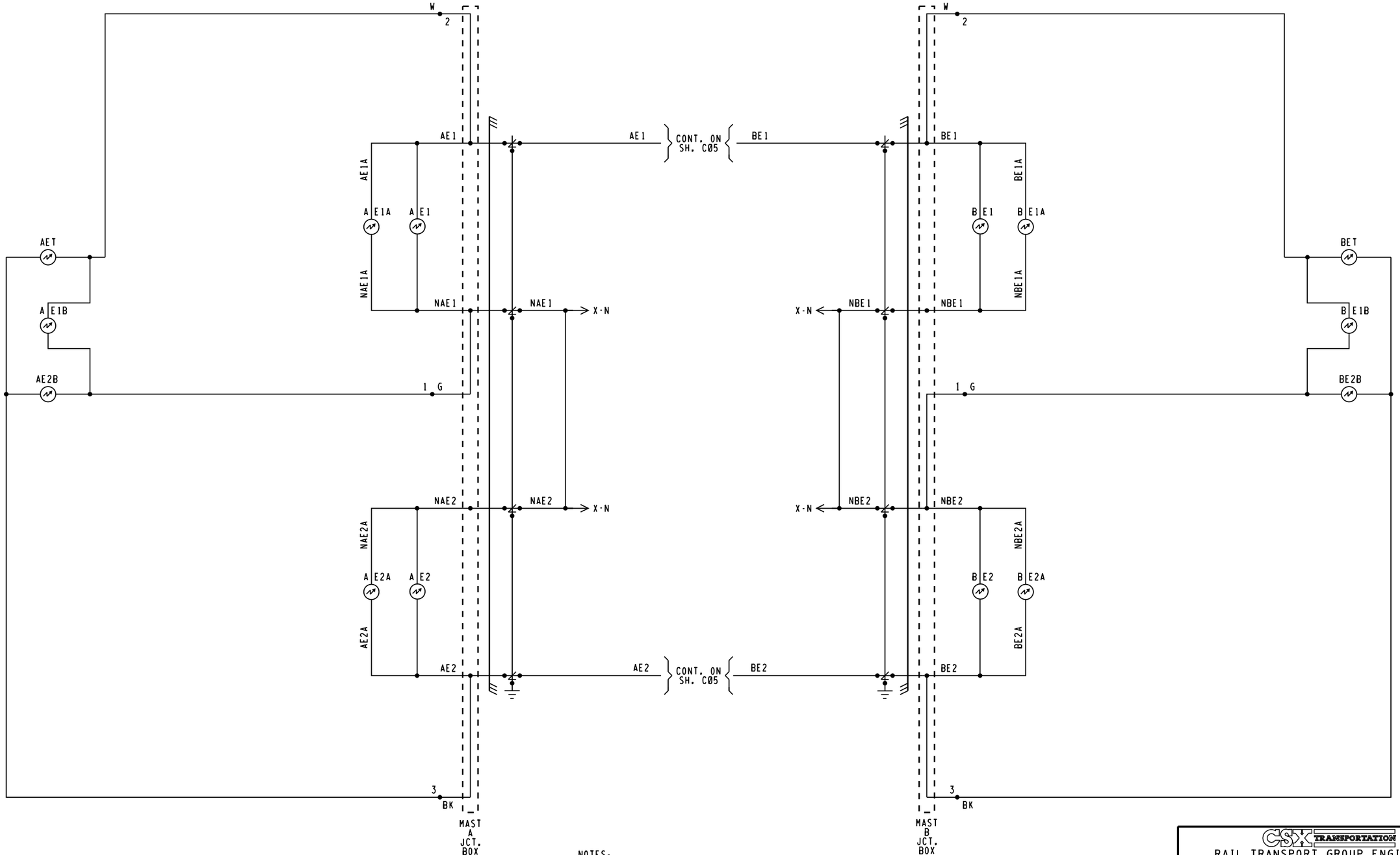

NOTES:

1. = TERMINAL IN JUNCTION BOX
2. WHEN 7 OR MORE LIGHTS ON A SINGLE STRUCTURE REFER TO SS382 FOR REQUIRED ARRESTERING
3. FEEDS TO ALL BUSSES AND LIGHT CIRCUITS ARE #10 FLEX
4. UNLESS NOTED ALL OTHER WIRING #16
5. CABLING SPECIFICATIONS SHOWN ON SH. S01

CSX TRANSPORTATION

RAIL TRANSPORT GROUP ENGINEERING
COMMUNICATIONS AND SIGNALS

KING ROAD (546513J)

CROSSING WARNING DEVICE LIGHT CIRCUITRY
SMITHBORO, IL M.P. QS-184.80

DESIGNED	DIGITIZED	CHECKED	DATE
XRL	XRL	XRL	08-18-14

DESIGN DATE	REV. NO.	DRAWING	SHEET NO	FILE	SHEET
08-18-14	1	-----	-----	-----	C07

WAYSIDE ACCESS GATEWAY CONFIGURATION	
SITE ATCS ADDRESS	7.125.412.020.16.01 7.125.LLL.GGG.SS.DD
SERIAL INTERFACE	38,400,NONE,8,1/NOFLOW
SERIAL FORMAT	RAW
WAG TEST MODE	DISABLED
ECHELON ADDRESS	01.07
UDP PORTS	5000, 5001, 5002, 5003
ROUTE TABLE EXPIRY	5400 SEC
BROADCAST MEDIUM	IP ETHERNET
TCP PORTS	23, 10023, 6001, 6002
DHCP SERVER	DISABLED
IP ADDRESS	192.168.13.1
TYPE 7 ROUTE LENGTH	12--7RRLLLGGGSS
IP NETWORK MASK	255.255.255.0
WAG CIRCUIT ID	DISABLE
ROUTING REGION DOMAIN 1	OCGSERVER1.JAX.COM
ATCS SERVER UDP PORT NUMBER	6001
TELNET NUMBERS	WAG 6002, SERIAL 10023
DEFAULT GATEWAY IP	192.168.013.031

NOTE TO INSPECTOR, AT INSTALLATION OF WAG, OR UPDATE OF THE CONFIGURATION, OR UPDATE OF THE EXECUTIVE PROGRAM, MARK-UP CONFIGURATION TABLE FOR AS IN SERVICE PLANS

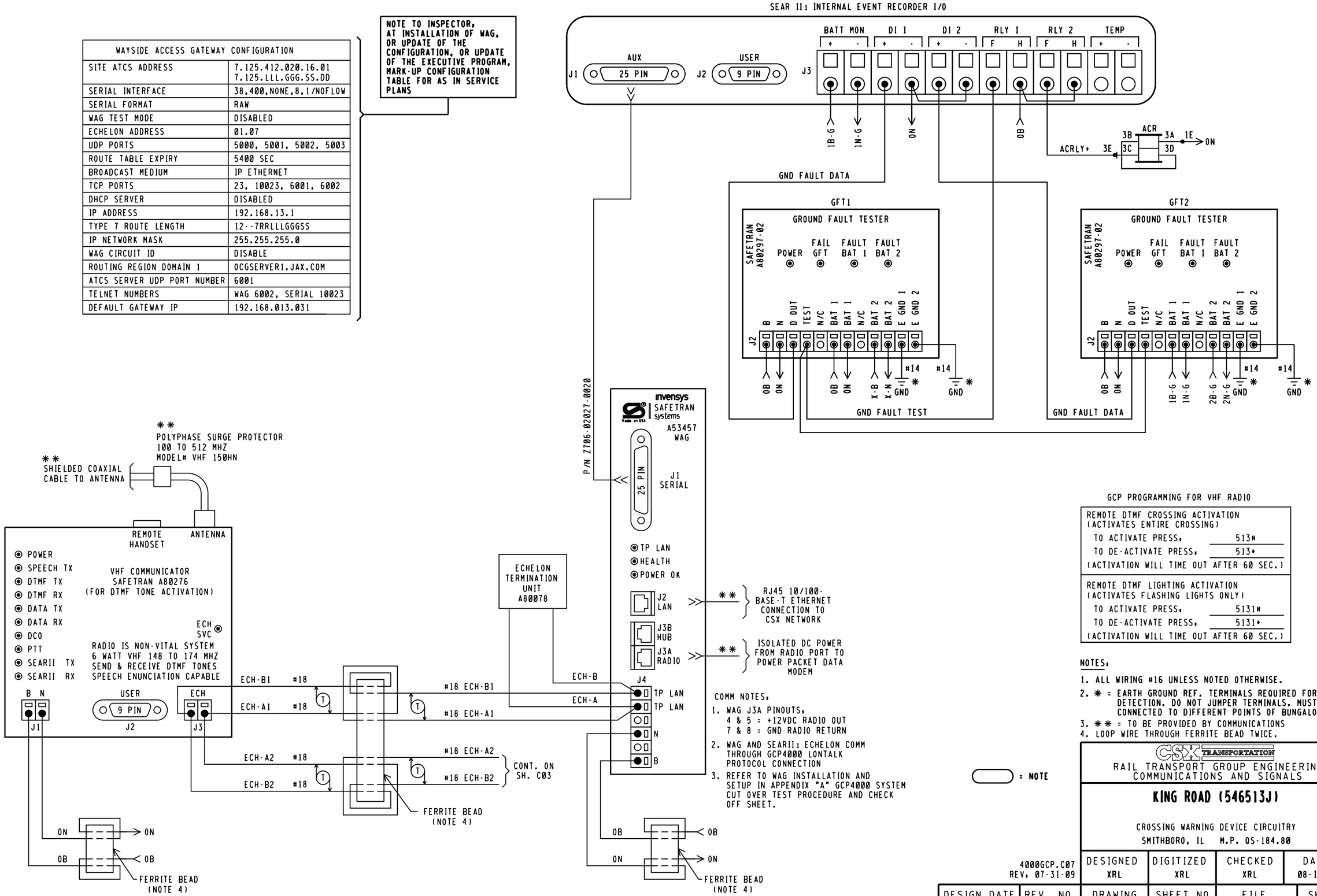

COMM NOTES.

1. WAG J3A PINOUTS.
   4 & 5 = +12VDC RADIO OUT
   7 & 8 = GND RADIO RETURN
2. WAG AND SEARII1 ECHELON COMM THROUGH GCP4000 LONTALK PROTOCOL CONNECTION
3. REFER TO WAG INSTALLATION AND SETUP IN APPENDIX "A" GCP4000 SYSTEM CUT OVER TEST PROCEDURE AND CHECK OFF SHEET.

GCP PROGRAMMING FOR VHF RADIO

REMOTE DTMF CROSSING ACTIVATION (ACTIVATES ENTIRE CROSSING)	
TO ACTIVATE PRESS.	513#
TO DE-ACTIVATE PRESS.	513*
(ACTIVATION WILL TIME OUT AFTER 60 SEC.)	

REMOTE DTMF LIGHTING ACTIVATION (ACTIVATES FLASHING LIGHTS ONLY)	
TO ACTIVATE PRESS.	5131#
TO DE-ACTIVATE PRESS.	5131*
(ACTIVATION WILL TIME OUT AFTER 60 SEC.)	

NOTES.

1. ALL WIRING #16 UNLESS NOTED OTHERWISE.
2. * = EARTH GROUND REF. TERMINALS REQUIRED FOR DETECTION. DO NOT JUMPER TERMINALS. MUST BE CONNECTED TO DIFFERENT POINTS OF BUNGALOW.
3. ** = TO BE PROVIDED BY COMMUNICATIONS
4. LOOP WIRE THROUGH FERRITE BEAD TWICE.

= NOTE

CSX TRANSPORTATION
RAIL TRANSPORT GROUP ENGINEERING
COMMUNICATIONS AND SIGNALS

KING ROAD (546513J)

CROSSING WARNING DEVICE CIRCUITRY
SMITHBORO, IL M.P. QS-184.80

4000GCP.C07
REV. 07-31-09

DESIGNED	DIGITIZED	CHECKED	DATE
XRL	XRL	XRL	08-18-14

DESIGN DATE	REV. NO.	DRAWING	SHEET NO	FILE	SHEET
08-18-14	1	-----	-----	-----	C08

	DEFAULTS AND/OR STYLE	FIELD RECORD
SEAR II1 EXECUTIVE PROGRAM	VERSION, 9V725A01X	VERSION, T
APPLICATION PROGRAM (IF LOADED)	VERSION, 9V864A01X	VERSION, B

NOTE TO INSPECTOR, AT IN SERVICE OF SEAR II1 OR UPDATE OF ITS INTERNAL EXECUTIVE PROGRAM OR ITS CSXT APPLICATION PROGRAM, THE VERSION NUMBER OF EACH PROGRAM MUST BE INSERTED IN THE BLANK FIELDS.

SITE SET UP PROCEDURE	
FUNCTION	LED DISPLAY
DATE/TIME	XX-XX-XXXX XX:XX:XX
AUTOMACTIC DST ADJUSTMENT	YES
TIME ZONE	EASTERN
SITE NAME	KING ROAD
MILEPOST	QS-184.80
DOT NUMBER	546513J
TESTER TYPE	CROSSING
DATE FORMAT	MM-DD-YYYY
TEMP FORMAT	FAHRENHEIT
INDICATE HOLD (SEC)	0
SITE TYPE	COLLECTOR
SITE ATCS ADDRESS	7.125.412.020.99.01 (7.RRR.LLL.GGG.99.01)
POLL ID	1
OFFICE ADDRESS	2.125.00.0000 (2.RRR.NN.DDDD)
FIELD COMM. DEVICE	VHF COMM. (ECHELON)
XID DISABLED	NO
GEN/ATCS MODE	EXTENDED
OFFICE COMM. DEVICE	SPREAD SPEC (ECHELON)
USER PORT BAUD	9600
USER PORT DATA BITS	8
USER PORT PARITY	NONE
USER PORT STOP BITS	1
USER PORT FLOW CONTROL	NONE
AUX PORT BAUD	9600
AUX PORT DATA BITS	8
AUX PORT PARITY	NONE
AUX PORT STOP BITS	1
AUX PORT FLOW CONTROL	NONE
COMM PORT BAUD	9600
COMM PORT DATA BITS	8
COMM PORT PARITY	NONE
COMM PORT STOP BITS	1
COMM PORT FLOW CONTROL	NONE

INSPECTOR NOTE,
USE VHF RADIO CHANNEL TABLE TO SELECT ROAD AND, MAINT. CHANNEL PER DIVISIONS FREQUENCY ALLOCATIONS. INDICATE ON A.I.S.

	CONTROL SYSTEM CONFIGURATION MENU QUESTIONS	
	OPTION	SELECTION
NOTE 1	RESET NAMES AND MODULES*	YES ☐ NO ☐
	RAILROAD NUMBER	125
	ENTRANCE GATES*	0 ☐ 1 ☐ 2 ■ 3 ☐ 4 ☐ 5 ☐ 6 ☐ 7 ☐ 8 ☐
NOTE 2	EXIT GATES*	0 ■ 1 ☐ 2 ☐ 3 ☐ 4 ☐
	GATE POSITION FAIL*	20 SECS. (10 TO 60 SECS.)
	BATTERY BANKS*	1 ☐ 2 ■ 3 ☐
	BATT MON USED*	NO ☐ YES ■
	INTERNAL CROSSING CONTROLLERS*	0 ☐ 1 ☐ 2 ■
	EXTERNAL CROSSING CONTROLLERS*	0 ■ 1 ☐ 2 ☐
	VHF COMMUNICATOR*	YES ■ NO ☐
NOTE 3	ACTIVATION CODE	513
	ACTIVATION TIMEOUT	(60 SEC)
	ILOD MODULES*	0 ☐ 1 ☐ 2 ■ 3 ☐ 4 ☐
NOTE 4	MIXED LED/INCANDESCENT BULBS*	NO ☐ YES ■
	AUTO INSPECTIONS*	YES ■ NO ☐
	BELL SENSOR*	0 ☐ 1 ■ 2 ☐ 3 ☐ 4 ☐
NOTE 5	BELL SENSOR TSS 1*	NO ☐ YES ■
	BELL SENSOR TSS 2*	NO ☐ YES ■
	BELL SENSOR TSS 3*	NO ■ YES ☐
	BELL SENSOR TSS 4*	NO ■ YES ☐
	BELL SENSOR TSS 5*	NO ■ YES ☐
	BELL SENSOR TSS 6*	NO ■ YES ☐
	BELL SENSOR TSS 7*	NO ■ YES ☐
	BELL SENSOR TSS 8*	NO ■ YES ☐
	BELL ON*	GATES LOWERING ■ GATES MOVING ☐ ALWAYS ☐
	GFT'S	YES ■ NO ☐
	BATTERIES ON GFT1	1 ☐ 2 ■
NOTE 6	GATE TIP SENSORS*	YES ■ NO ☐
	RTU	NO ■ YES ☐
NOTE 7	ROAD CHANNEL	1 ☐ 2 ☐ 3 ☐ 4 ☐ 5 ☐ 6 ☐ 7 ☐ 8 ☐
	MAINT. CHANNEL	1 ☐ 2 ☐ 3 ☐ 4 ☐ 5 ☐ 6 ☐ 7 ☐ 8 ☐
	FULL APPROACH MOVE ALARMS*	ACTIVATED ■ DO NOT ACTIVATE ☐

NOTE 8	EDIT DIGITAL INPUTS	■ NO ☐ YES
	EDIT BATTERIES	■ NO ☐ YES
	EDIT RELAYS	■ NO ☐ YES
	EDIT INDICATOR LEDS	■ NO ☐ YES
	EDIT TEST LED'S	■ NO ☐ YES
	EDIT ILOD SENSOR	■ NO ☐ YES
	EDIT VHF SETTINGS	■ NO ☐ YES

NOTES,

1. SELECT YES ON INITIAL SET-UP.
2. OPTION AVAILABLE IF GATES = YES
3. OPTION AVAILABLE IF VHF COMMUNICATOR = YES LAST 3 DIGITS OF DOT NUMBER.
4. OPTION AVAILABLE IF ILODS.
5. OPTION AVAILABLE IF BELL SENSORS.
6. OPTION AVAILABLE IF GATES.
7. OPTION AVAILABLE IF VHF RADIO.
8. ONLY YES IN SPECIAL CIRCUMSTANCES.

VHF RADIO CHANNELS			
1	161.130	5	161.550
2	160.710	6	160.785
3	160.560	7	160.785
4	160.860	8	160.785

INSPECTOR NOTE,
CURRENT VALUES MAY VARY DEPENDANT ON FIELD CONDITIONS, MARK UP PER ACTUAL READINGS FOR IN-SERVICE REVISION.

LIT BULB COUNT ON EACH CIRCUIT	NO.	TYPE OF BULB	CURRENT READING IN AMP. AT APPROX. 10.0 V ARRAY VOLTAGE
CURRENT SENSOR (1) AE1, LAMP SET UP	4	☐BULBS ■LED	4.0
CURRENT SENSOR (1) AE2, LAMP SET UP	4	☐BULBS ■LED	4.0
CURRENT SENSOR (2) BE1, LAMP SET UP	4	☐BULBS ■LED	4.0
CURRENT SENSOR (2) BE2, LAMP SET UP	4	☐BULBS ■LED	4.0

MEASURE BATTERY VOLTAGE AT INPUT		
BATTERY VOLTAGE	OB	_____ VOLTS
BATTERY VOLTAGE	X-B	_____ VOLTS
BATTERY VOLTAGE	B-G	_____ VOLTS

FIELD TO PROVIDE ON AS-IN-SERVICE

( ) = NOTE

4000GCP6TK.C11
SWE REV. 03-10-06

CSX TRANSPORTATION
RAIL TRANSPORT GROUP ENGINEERING
COMMUNICATIONS AND SIGNALS

KING ROAD (546513J)

SEAR II I CONFIGURATION & FUNCTION
SMITHBORO, IL M.P. QS-184.80

DESIGNED	DIGITIZED	CHECKED	DATE
XRL	XRL	XRL	08-18-14

DESIGN DATE	REV. NO.	DRAWING	SHEET NO	FILE	SHEET
08-18-14	1	.....	.....	.....	C09

INDEX

CONTENTS

SH. NO.		REVISION NO. 1	2	3	4	5	6	7	8	9
I01	INDEX AND REVISIONS	/	/							
S01	TRACK AND SIGNAL PLAN	/	/							
E01	POWER DISTRIBUTION	/								
C01	CROSSING DETECTION CIRCUITRY (20CWU)	/								
C02	DETECTION DEVICE PROGRAM (20CWU)	/								
C03	CROSSING WARNING DEVICE GATE CIRCUITRY	/								
C04	CROSSING WARNING DEVICE LIGHT CIRCUITRY	/	/							
C05	SEAR II CIRCUITS	/								
C06	SEAR II CONFIGURATION AND FUNCTIONS	/	/							
C07	SEAR II CHANNELS	/								
C08	WAYSIDE ACCESS GATEWAY	/								

/ = DESIGN COMPLETED

X = REVISION COMPLETED

= NOTE

REVISIONS

REV. NO.	PROJECT NO.	DESIGN DATE	IN SERVICE DATE	REVISION DATE
1	IL2014024A	08-18-14		
2	IL2014024B	11-10-14		

TO BE COMPLETED ON A.I.S.

CSX TRANSPORTATION

RAIL TRANSPORT GROUP ENGINEERING
COMMUNICATIONS AND SIGNALS

MAIN STREET (546514R)

INDEX AND REVISIONS
SMITHBORO, IL M.P. QS-186.20

1TRKHXP3R.I01
REV. 07-03-13

DESIGNED	DIGITIZED	CHECKED	DATE
XRL	XRL	XRL	08-18-14

DESIGN DATE	REV. NO.	DRAWING	SHEET NO	FILE	SHEET
11-10-14	2	-----	-----	-----	I01

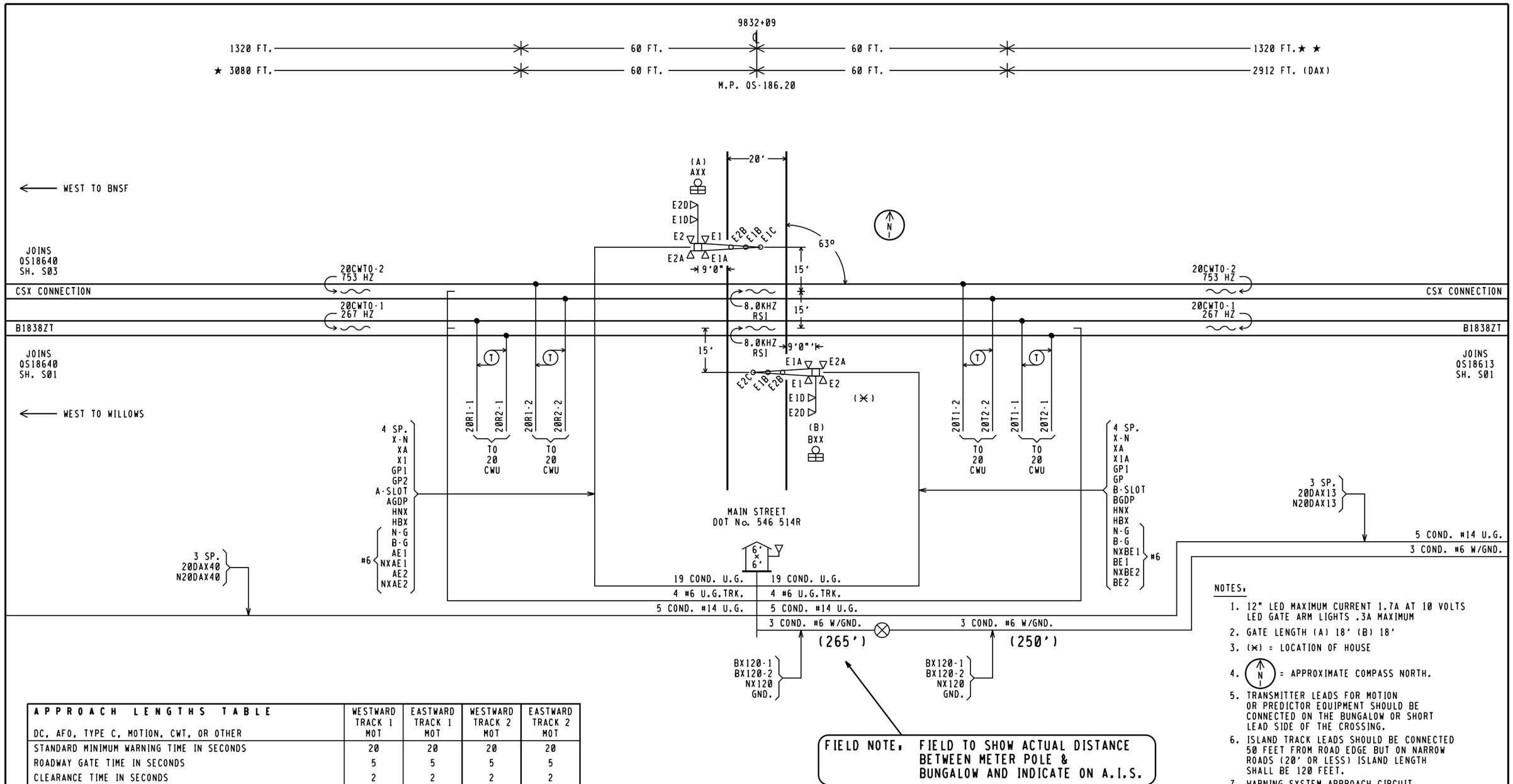

APPROACH LENGTHS TABLE DC, AFO, TYPE C, MOTION, CWT, OR OTHER	WESTWARD TRACK 1 MOT	EASTWARD TRACK 1 MOT	WESTWARD TRACK 2 MOT	EASTWARD TRACK 2 MOT
STANDARD MINIMUM WARNING TIME IN SECONDS	20	20	20	20
ROADWAY GATE TIME IN SECONDS	5	5	5	5
CLEARANCE TIME IN SECONDS	2	2	2	2
DOT TRAFFIC LIGHT SIMULTANEOUS PREEMPT TIME IN SECONDS✳	0	0	0	0
DESIGNED WARNING TIME FOR TRAINS AT TIME TABLE SPEED	27 SEC.	27 SEC.	27 SEC.	27 SEC.
DOT TRAFFIC LIGHT ADVANCE PREEMPT TIME IN SECONDS ✳	0	0	0	0
CONTROL EQUIPMENT DECISION TIME IN SECONDS	4	4	4	4
DESIGNED DETECTION TIME FOR TRAINS AT TIME TABLE SPEED	31 SEC.	31 SEC.	31 SEC.	31 SEC.
TIME TABLE MAXIMUM TRAIN SPEED IN MILES PER HOUR	60	60	25	10
BUFFER SPEED IN MILES PER HOUR	5	5	5	2.5
TOTAL WARNING SYSTEM DESIGN SPEED IN MILES PER HOUR	65	65	30	12.5
APPROACH DISTANCE TO ISLAND EDGE IN FEET	2912	2912	1320	567
HALF WIDTH OF ISLAND IN FEET	60	60	60	60
APPROXIMATE MILE POSTS FOR APPROACH CIRCUIT	186.78	185.65		185.95

✳AUTHORIZING AGENCY, NONE
✳DATE OF REQUIREMENT, NONE
✳AMOUNT OF TIME (SEC.), NONE

★ = APPROACH ADJUSTED DUE TO EXISTING START
★★= APPROACH ADJUSTED TO BALANCE UNIT

FIELD NOTE, FIELD TO SHOW ACTUAL DISTANCE BETWEEN METER POLE & BUNGALOW AND INDICATE ON A.I.S.

NOTES,

1. 12" LED MAXIMUM CURRENT 1.7A AT 10 VOLTS LED GATE ARM LIGHTS .3A MAXIMUM
2. GATE LENGTH (A) 18' (B) 18'
3. (✕) = LOCATION OF HOUSE
4. (N) = APPROXIMATE COMPASS NORTH.
5. TRANSMITTER LEADS FOR MOTION OR PREDICTOR EQUIPMENT SHOULD BE CONNECTED ON THE BUNGALOW OR SHORT LEAD SIDE OF THE CROSSING.
6. ISLAND TRACK LEADS SHOULD BE CONNECTED 50 FEET FROM ROAD EDGE BUT ON NARROW ROADS (20' OR LESS) ISLAND LENGTH SHALL BE 120 FEET.
7. WARNING SYSTEM APPROACH CIRCUIT DISTANCES ARE TO BE MEASURED FROM THE ISLAND TRACK CONNECTIONS.

= NOTE

CSX TRANSPORTATION
RAIL TRANSPORT GROUP ENGINEERING
COMMUNICATIONS AND SIGNALS

MAIN STREET (546514R)

TRACK AND SIGNAL PLAN
SMITHBORO, IL M.P. OS-186.20

1TRKHXP3R.S01
REV. 07-03-13

DESIGNED	DIGITIZED	CHECKED	DATE
XRL	XRL	XRL	08-18-14

DESIGN DATE	REV. NO.	DRAWING	SHEET NO	FILE	SHEET
11-10-14	2	-----	-----	-----	S01

TOP ROW

XR			XPR			GPR				EOR				13DAXR			POR			40DAXR			1ACR			2ACR			DTMFR			13DAXR		
12	FB	B8	22	F	B36	12	B	B82		12	FB	B81		12		B8	12	FB	B62	12	F	B8	12	B	B77	12	B	B77	9	B	11 N68	12	F	B8
15	FB	C30	25	F	C30	15	B	C30		15	FB	C30		15		C30	15	FB	C30	15		C30	15	B	C30	15	B	C30	10		12 C48	15		C30
22						22				32	FB			22			22	FB		22			22			22					C49	22		
23						25				35	FB			23	F		25	FB		23	F		25			25						23	F	
25	F					32	F							25	F		32	F		25	F		32	B		32	B					25	F	
32						35	B							32			35			32			35	B		35	B					32		
35														35						35												35		

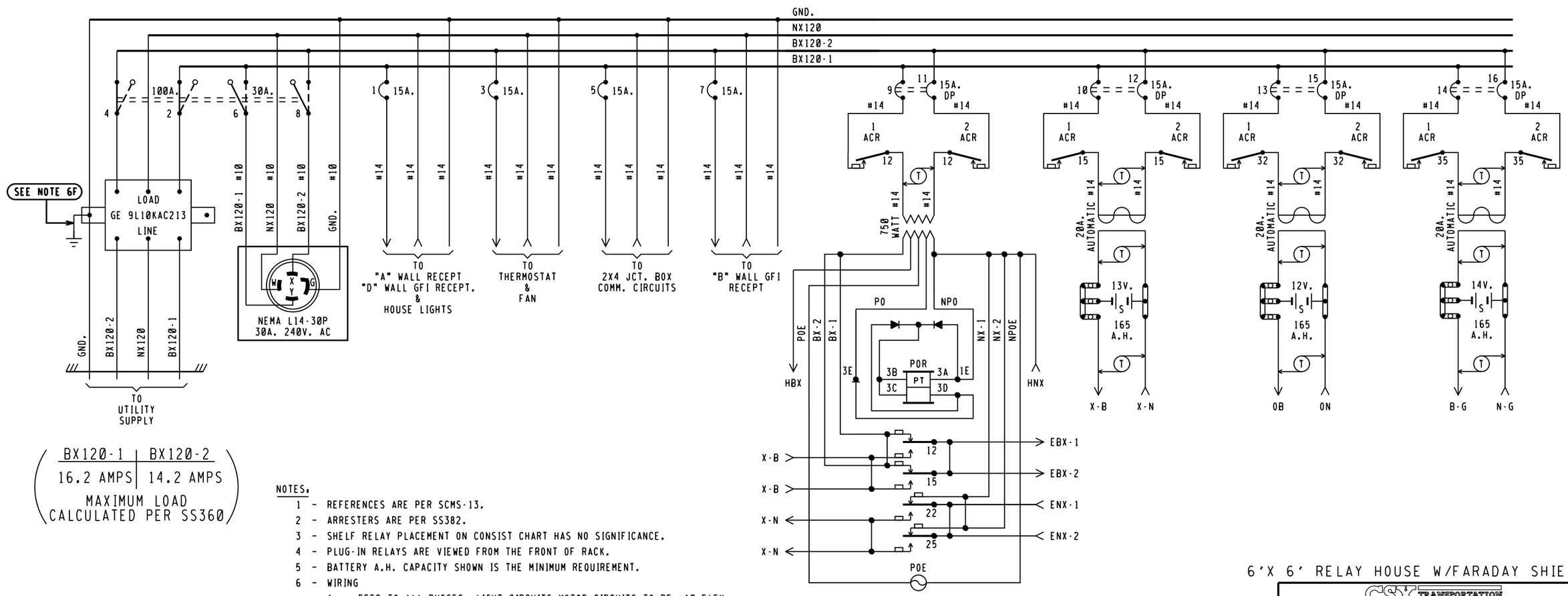

BX120-1	BX120-2
16.2 AMPS	14.2 AMPS

MAXIMUM LOAD CALCULATED PER SS360

NOTES.

1 - REFERENCES ARE PER SCMS-13.
2 - ARRESTERS ARE PER SS382.
3 - SHELF RELAY PLACEMENT ON CONSIST CHART HAS NO SIGNIFICANCE.
4 - PLUG-IN RELAYS ARE VIEWED FROM THE FRONT OF RACK.
5 - BATTERY A.H. CAPACITY SHOWN IS THE MINIMUM REQUIREMENT.
6 - WIRING
  A - FEED TO ALL BUSSES, LIGHT CIRCUITS,MOTOR CIRCUITS TO BE #10 FLEX.
  B - 120-VOLT FEED FROM ENTRANCE TO POWER BUSS TO BE #10 FLEX.
  C - ALL TRACK WIRES TO BE #10 FLEX.
  D - ALL OTHERS TO BE #16 FLEX UNLESS NOTED.
  E - ALL BATTERY OUTPUTS TO BE #6 PER SS360.
  F - GROUND WIRE NOT NECESSARY WHEN GE ARRESTER IS MOUNTED ON GROUND PLANE OR METAL ENCLOSURE AFFIXED DIRECTLY TO BUNGALOW METALLIC STRUCTURAL MEMBER.
7 - CIRCUIT INTERRUPTERS 2 & 4 ARE MECHANICALLY INTERLOCKED WITH CIRCUIT INTERRUPTERS 6 & 8.
8 - CHARGERS TO BE WIRED FOR 240VAC
9 - CIRCUIT BREAKER PANEL - 00124L125G (24 SPACES)

WILMORE DC-DC CONVERTER
MODEL 1675-12-12-15

INPUT: + → 0B, - → 0N
OUTPUT: + → B, - → N

6'X 6' RELAY HOUSE W/FARADAY SHIELD

CSX TRANSPORTATION
RAIL TRANSPORT GROUP ENGINEERING
COMMUNICATIONS AND SIGNALS

MAIN STREET (546514R)

POWER DISTRIBUTION
SMITHBORO, IL M.P. OS-186.20

1TRKHXP3R.E01
REV. 07-03-13

DESIGNED	DIGITIZED	CHECKED	DATE
XRL	XRL	XRL	08-18-14

DESIGN DATE	REV. NO.	DRAWING	SHEET NO	FILE	SHEET
08-18-14	1	-----	-----	-----	E01

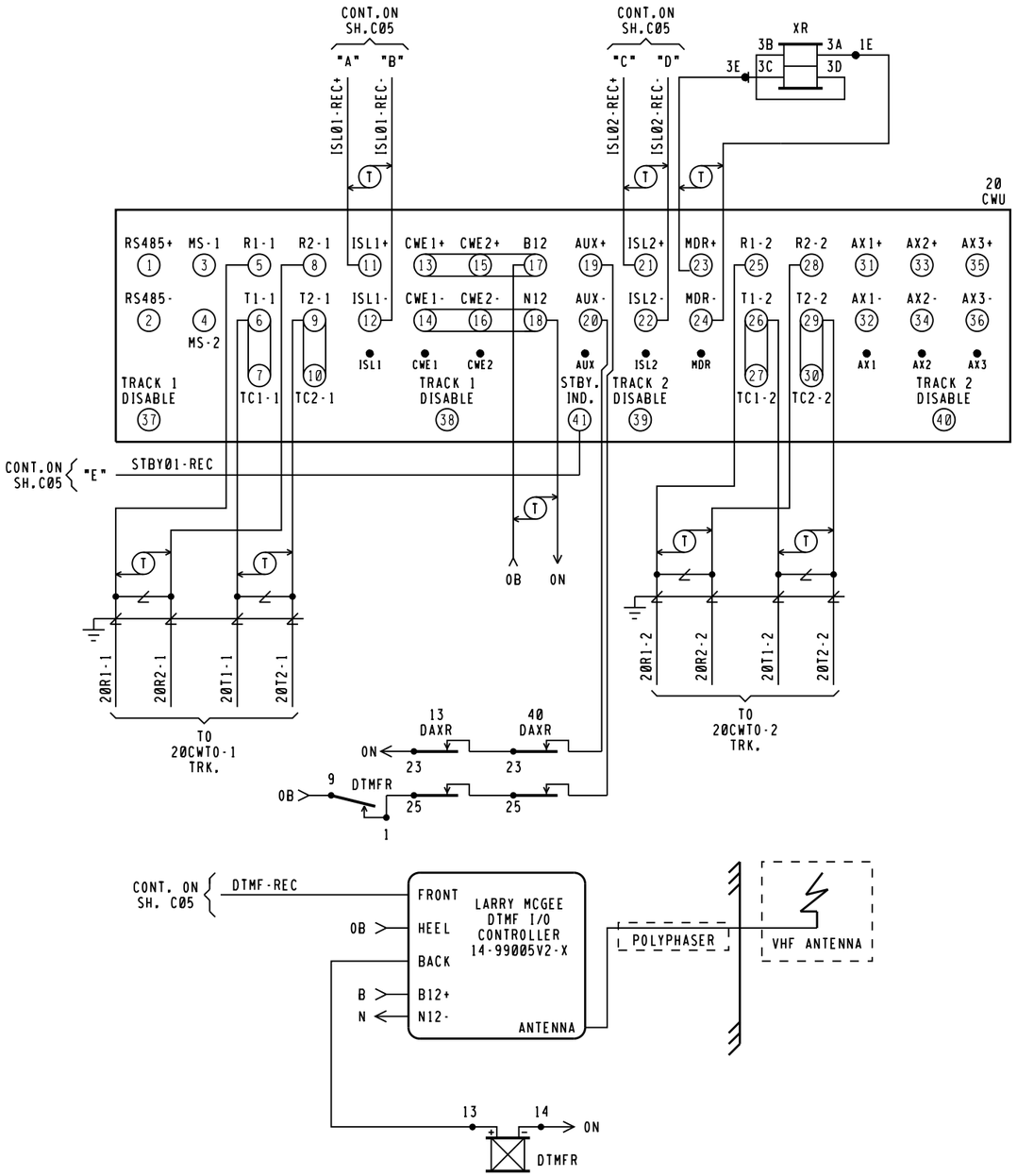

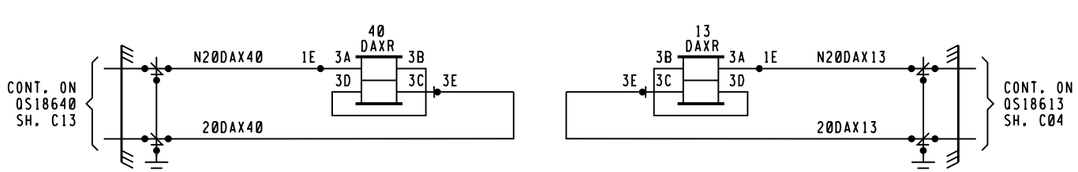

NORMAL SYSTEM

CABINET SWITCHES

MASTER/SLAVE SWITCHES ARE LOCATED IN THE UPPER BAY OF CABINET

THESE SWITCHES ARE LOCATED ON MOTHERBOARD

SYSTEM CONFIGURATION				
S13 & S14 DIP SWITCH POSITIONS				
SWITCH #	1	2	3	4
SWITCH POSITION	ON	OFF	OFF	OFF
APPROACH,	NORMAL		(NOT USED)	

	FREQUENCY SELECT					
TRACK 1	S11 & S12 DIP SWITCH POSITIONS 267 HZ					
	SWITCH #	1	2	3	4	5
	SWITCH POSITION	OFF	OFF	OFF	ON	OFF
TRACK 2	S15 & S16 DIP SWITCH POSITIONS 753 HZ					
	SWITCH #	1	2	3	4	5
	SWITCH POSITION	ON	OFF	ON	OFF	ON

STANDBY SYSTEM

CABINET SWITCHES

MASTER/SLAVE SWITCHES ARE LOCATED IN THE UPPER BAY OF CABINET

MASTER/SLAVE

MASTER SLAVE S1 TRACK 1

MASTER SLAVE S2 TRACK 2

THESE SWITCHES ARE LOCATED ON MOTHERBOARD

SYSTEM CONFIGURATION				
S5 & S6 DIP SWITCH POSITIONS				
SWITCH #	1	2	3	4
SWITCH POSITION	ON	OFF	OFF	OFF
APPROACH,	NORMAL		(NOT USED)	

	FREQUENCY SELECT					
TRACK 1	S3 & S4 DIP SWITCH POSITIONS 267 HZ					
	SWITCH #	1	2	3	4	5
	SWITCH POSITION	OFF	OFF	OFF	ON	OFF
TRACK 2	S7 & S8 DIP SWITCH POSITIONS 753 HZ					
	SWITCH #	1	2	3	4	5
	SWITCH POSITION	ON	OFF	ON	OFF	ON

GCP PROGRAMMING FOR VHF RADIO

REMOTE DTMF CROSSING ACTIVATION
(ACTIVATES ENTIRE CROSSING)

TO ACTIVATE PRESS, 514#

TO DE-ACTIVATE PRESS, 514*

(ACTIVATION WILL TIME OUT AFTER 60 SEC.)

REMOTE DTMF LIGHTING ACTIVATION
(ACTIVATES FLASHING LIGHTS ONLY)

TO ACTIVATE PRESS, 5141#

TO DE-ACTIVATE PRESS, 5141*

(ACTIVATION WILL TIME OUT AFTER 60 SEC.)

20CWU HXP-3R2 MODULES REQUIRED

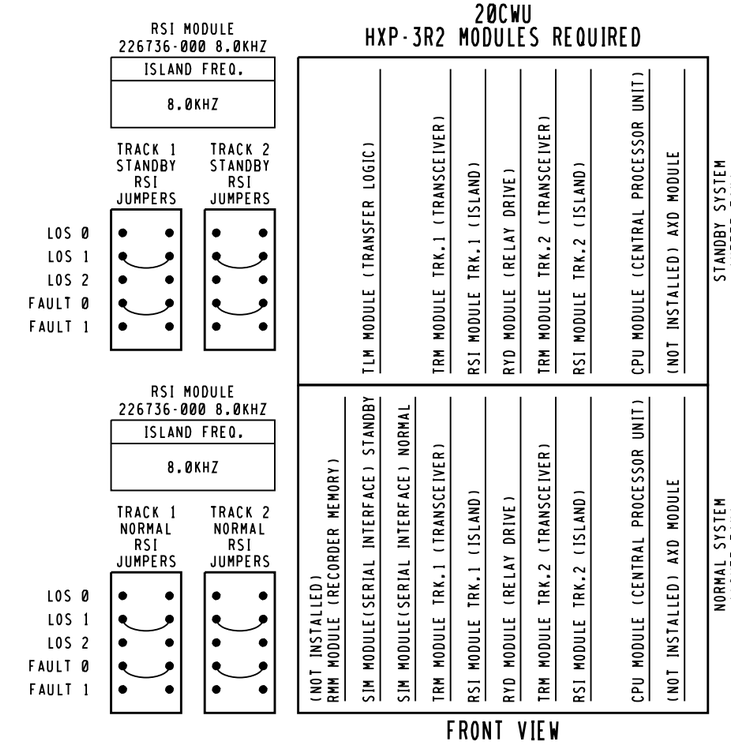

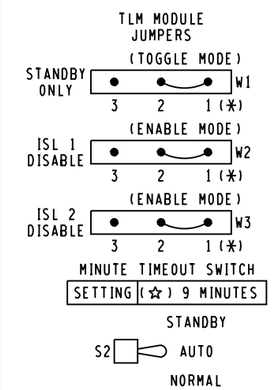

NOTE,
PIN 1 IS IDENTIFIED BY ASTERICK BELOW IT.
(☆) = MAY BE SET PER FIELD CONDITIONS.

2TRKHXP3R2(NO MDSA).C01
REV, 08-31-09

CSX TRANSPORTATION
RAIL TRANSPORT GROUP ENGINEERING
COMMUNICATIONS AND SIGNALS

MAIN STREET (546514R)

CROSSING DETECTION CIRCUITRY (20CWU)
SMITHBORO, IL M.P. OS-186.20

DESIGNED	DIGITIZED	CHECKED	DATE
XRL	XRL	XRL	08-18-14

DESIGN DATE	REV. NO.	DRAWING	SHEET NO	FILE	SHEET
08-18-14	1	-----	-----	-----	C01

20CWU

HXP-3R2 APPLICATION DESIGN CARD

OPTION 90 (CABINET #)	CABINET #

PASSWORD(_ _*_ _)(SEE MANUAL 100052-001 AA0 1-27		TRACK 1	TRACK 2	DEFAULT
APPROACH LENGTH ADJUSTMENT		1053'	1320'	9,999 FT.
WARNING TIME ADJUSTMENT		27 SEC.	27 SEC.	99 SEC.
LUMPED IMPEDANCE ADJUSTMENT (LIA)		*	*	0
TRANSMITTER CHECK ADJUSTMENT (TC)		*	*	0
MOTION DETECT RESTART (MD RESTART)		0 ☆	0 ☆	99%
OPTION 1 TRACK ENABLE (TK-ENA)		UP	UP	UP (ALWAYS ENABLED)
OPTION 2 TRACK FREQUENCY (TK FO)		STRAP ◇	STRAP ◇	0 HZ
OPTION 3 CONSTANT WARNING/MOTION (CW/MD)		d	d	d (Motion)
OPTION 4 UNI/BIDIRECTIONAL (UNI-BI)		b	b	b (bi)
OPTION 5 NARROW BAND COMPENSATION (NBS-C)		⊗	⊗	9,999 FT.
OPTION 6 CWE WARNING TIME (CWEWT)		80 SEC.	80 SEC.	80 SEC.
OPTION 7 LOSS OF SHUNT TIME (LOS)		16 SEC.	16 SEC.	16 SEC.
OPTION 8 LOS W/JOINTS NEAR ISLAND (IJ-LOS)		5 SEC. **	5 SEC. **	5 SEC.
OPTION 9 BALLAST COMPENSATION (BC)		*	*	FREQUENCY DEPENDANT ◎
OPTION 10 PHASE COMPENSATION ADJUSTMENT (P-COMP)		~~***~~	~~***~~	0°
OPTION 17 MDR DRIVE OR AX RELAY DRIVE SELECTION (MDR-AX)		◎	N/A	dn (STATUS ONLY) ◎
OPTION 18 MOTION DETECTOR TIMER (MD-TMR)		10 MIN.	10 MIN.	10 MIN. (0 = DISABLE)
OPTION 19 MINIMUM WARNING TIME WITH ADVANCED PREEMPTION (MIN-WT)		00 SEC.	00 SEC.	00 SEC. (0 = DISABLE)
	OPTION 20 FALSE SHUNT TIMER ADJUSTMENT (FS-TMR)			
ITEM 1	FALSE SHUNT RX (FS-RX)	0	0	0, 0 = DISABLE
ITEM 2	FALSE SHUNT TIMER ADJUSTMENT (FS-TM)	10	10	10
	OPTION 21 POSITIVE START RX & TIMER ADJUSTMENT (POS-ST)			
ITEM 1	POSITIVE START RX (POS-RX)	0	0	0, 0 = DISABLE
ITEM 2	POSITIVE START TIMER (POS-TM)	10	10	10
	OPTION 22 APPROACH RELEASE RX (AR-TM)			
ITEM 1	APPROACH RELEASE RX (AR-RX)	0	0	0, 0 = DISABLE
ITEM 2	APPROACH RELEASE TIMER (AR-TM)	10	10	10
OPTION 47 AUTO RX ADJUSTMENT (ATO-RX)		dn	dn	dn = DISABLE
OPTION 48 PREDICTIVE FILTER ENABLE/DISABLE (PF-ENA)		dn	dn	UP = ENABLE
OPTION 49 RESET LOCAL PARAMETERS TO DEFAULT SETTINGS (RESET)				PAGE 3-14 & 3-41
OPTION 50 RECORDER PRINTER CONTROL (PRNTR)		⊕		PAGE 1-47 & 3-41
OPTION 51 CLOCK ADJUSTMENT (CLOCK)		⊕		PAGE 3-32
	OPTION 70 LOCAL SERIAL I/O PORT ADJUSTMENT (LSP)			
ITEM 1	BAUD RATE	38.4	⊕	PAGE 1-47 & 3-42
ITEM 2	DBITS (DATA BITS)	8	⊕	PAGE 1-47 & 3-42
ITEM 3	PA (PARITY)	NO(-=NO PARITY)	⊕	PAGE 1-47 & 3-42
OPTION 90 CABINET NUMBER DISPLAY (CAB)		*		PAGE 1-47 & 3-41
OPTION 91 HXP-3 OPERATING PROGRAM VERSION NUMBER (VERS)		*		VERSION 35.0
OPTION 99 RESET PASSWORD TIMER (TIMER)		⊕		PAGE 3-30

NOTE:

- * = ENTRY TO BE DONE ON AS-IN-SERVICE.
- ☆ = NORMALLY SET AT "0" SEE MANUAL 100052-001 AA0 PG. 1-46 & 3-41.
- ◇ = THE WORD STRAP IS DISPLAYED WHEN FREQUENCY SELECT DIP SWITCHES USED TO SELECT A STANDARD FREQUENCY.
- ⊗ = ADJUSTMENT NECESSARY ONLY WHEN AX RELAY DRIVE MODULE USED.
- ** = ADJUSTMENT NECESSARY IF INSULATED JOINTS ARE LOCATED NEAR ISLAND CIRCUIT.
- ~~***~~ = ADJUSTMENT NECESSARY ONLY IF VERY POOR BALLAST CONDITIONS NEED TO BE COMPENSATED.
- ◎ = OPTION 17 SUB-MENU USED ONLY WHEN AX RELAY DRIVE OPERATION IS SELECTED. ENTERING AN OFFSET DISTANCE VALUE OTHER THAN ZERO ASSIGNS A MDR AS AN AX DRIVE.
- ◎ = FREQUENCY DEPENDANT, RANGE BETWEEN 50-250 TO BE SUPPLIED ON AS-IN-SERVICE.
- ⊕ = OPTIONS 50-99 ARE NON-VITAL AND NOT REQUIRED FOR INITIAL SETUP. SEE MANUAL 100052-001 AA0. FOR OPTIONS 49 TO 99 SEE PAGES AS LISTED IN DEFAULT COLUMN.
- ⊕ = SET CORRECT LOCAL TIME AND DATE. TIME OF DAY SHOULD BE SYNCRONIZED WITH TIME SHOWN BY EXTERNAL EVENT RECORDER.

CSX TRANSPORTATION
RAIL TRANSPORT GROUP ENGINEERING
COMMUNICATIONS AND SIGNALS

MAIN STREET (546514R)

DETECTION DEVICE PROGRAM (20CWU)
SMITHBORO, IL M.P. QS-186.20

2TRKHXP3R2.C02
REV. 10-31-07

DESIGNED	DIGITIZED	CHECKED	DATE
XRL	XRL	XRL	08-18-14

DESIGN DATE	REV. NO.	DRAWING	SHEET NO	FILE	SHEET
08-18-14	1	-----	-----	-----	C02

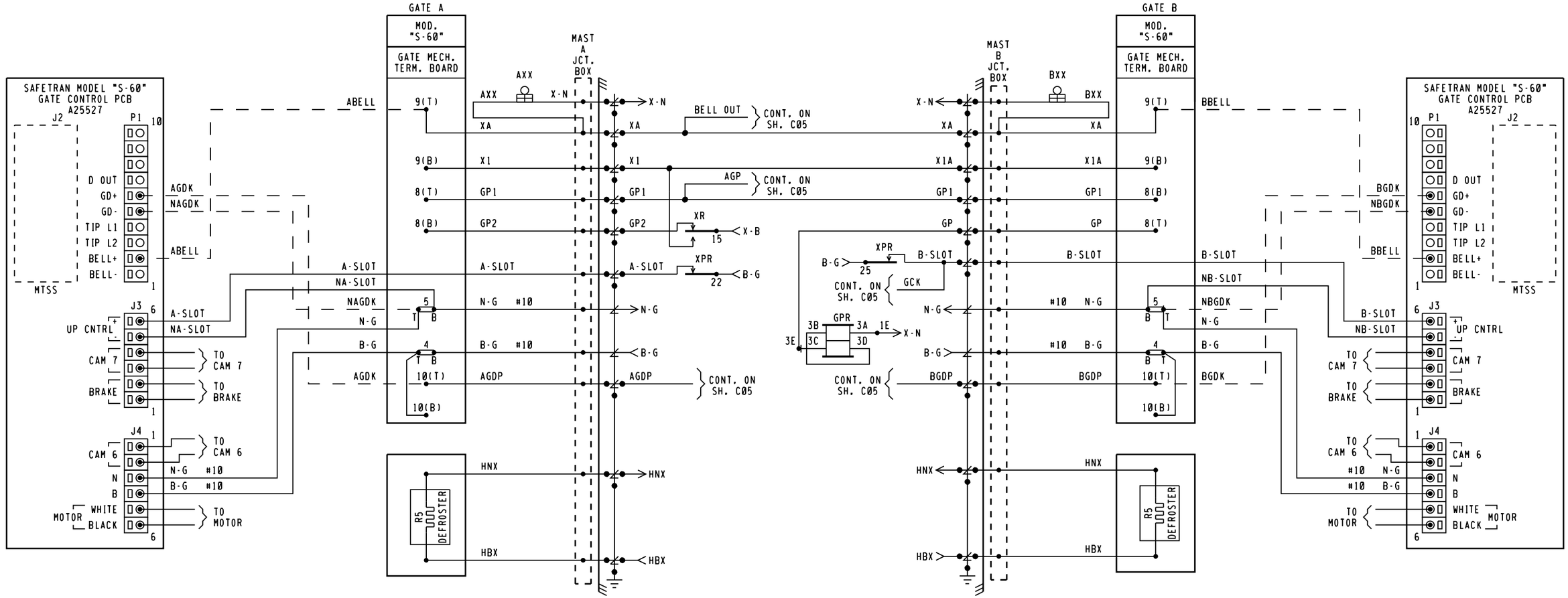

CSX TRANSPORTATION
RAIL TRANSPORT GROUP ENGINEERING
COMMUNICATIONS AND SIGNALS

MAIN STREET (546514R)

CROSSING WARNING DEVICE GATE CIRCUITRY
SMITHBORO, IL M.P. QS-186.20

1TRKHXP3R.C03
REV. 07-03-13

DESIGNED	DIGITIZED	CHECKED	DATE
XRL	XRL	XRL	08-18-14

DESIGN DATE	REV. NO.	DRAWING	SHEET NO	FILE	SHEET
08-18-14	1	-----	-----	-----	C03

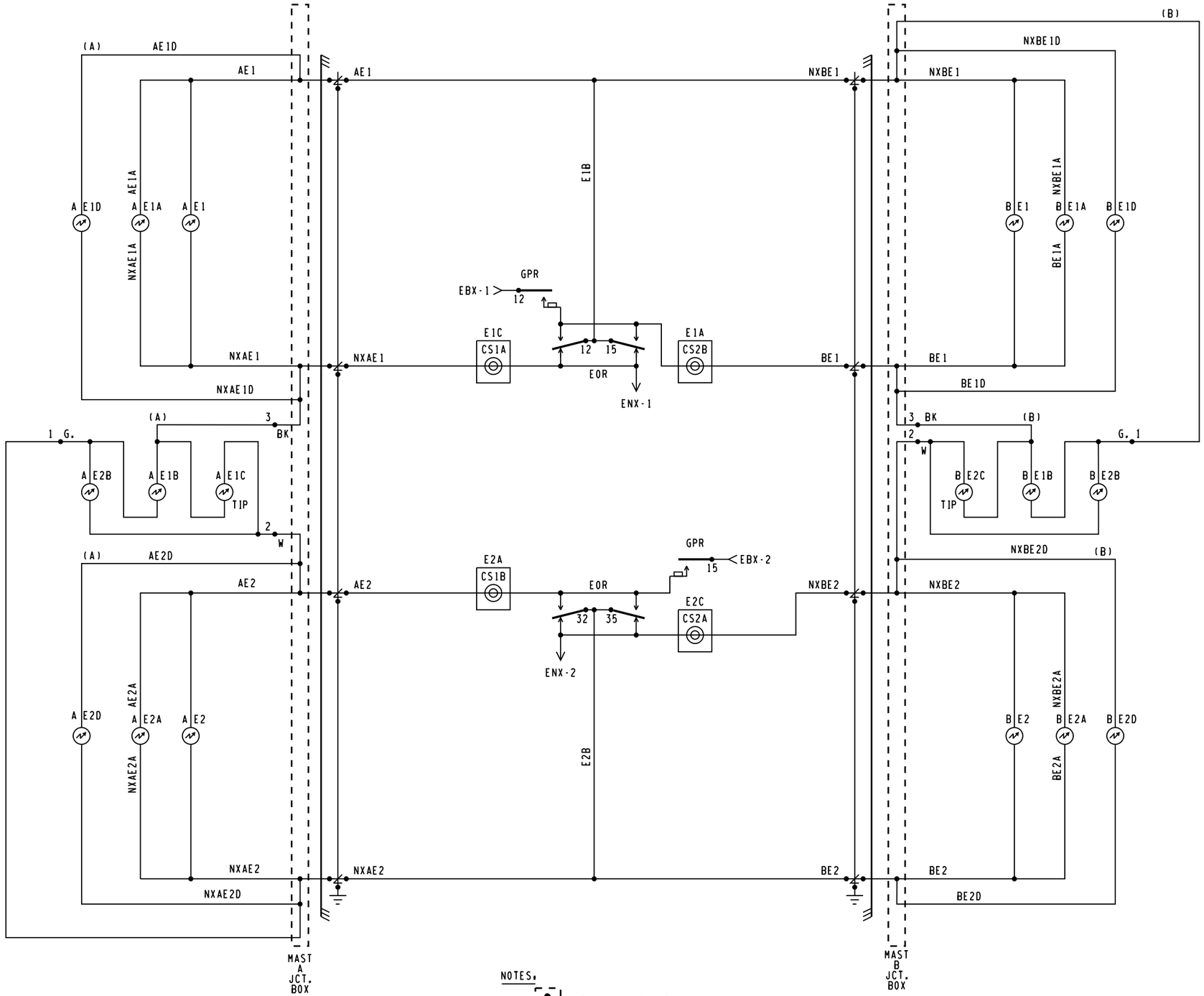

NOTES:

1. [•] = TERMINAL IN JCT. BOX
2. WHEN 7 OR MORE LIGHTS ON A SINGLE STRUCTURE REFER TO SS-382 FOR REQUIRED ARRESTER RATING.

CSX TRANSPORTATION

RAIL TRANSPORT GROUP ENGINEERING
COMMUNICATIONS AND SIGNALS

MAIN STREET (546514R)

CROSSING WARNING DEVICE LIGHT CIRCUITRY
SMITHBORO, IL M.P. QS-186.20

1TRKHXP3R.C04
REV. 07-03-13

DESIGNED	DIGITIZED	CHECKED	DATE
XRL	XRL	XRL	08-18-14

DESIGN DATE	REV. NO.	DRAWING	SHEET NO	FILE	SHEET
11-10-14	2	-----	-----	-----	C04

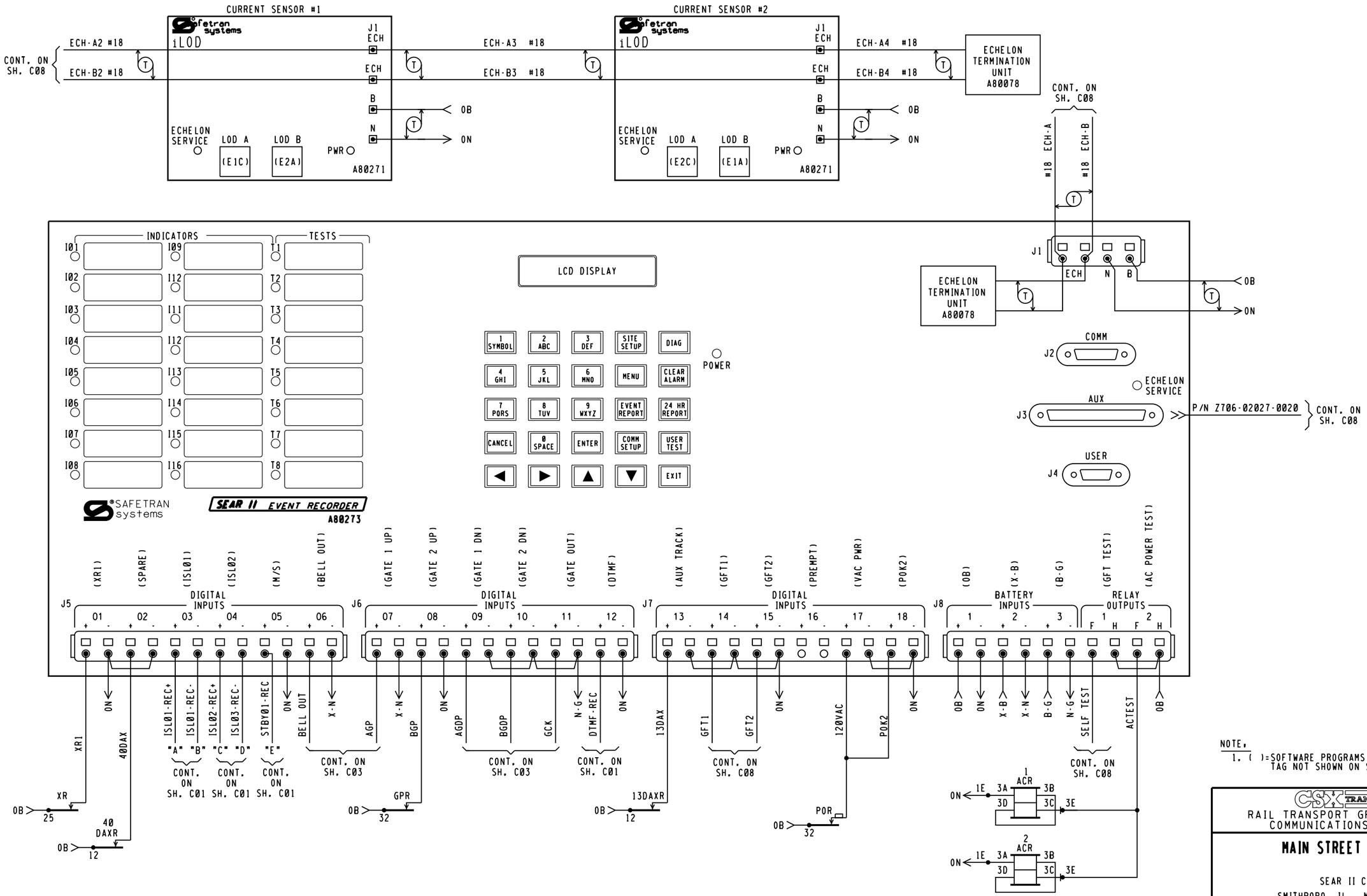

NOTE,
1. ( )=SOFTWARE PROGRAMS NAME, TAG NOT SHOWN ON SEAR

CSX TRANSPORTATION
RAIL TRANSPORT GROUP ENGINEERING
COMMUNICATIONS AND SIGNALS

MAIN STREET (546514R)

SEAR II CIRCUITS
SMITHBORO, IL M.P. QS-186.20

1TRKHXP3R.C05
REV. 07-03-13

DESIGNED	DIGITIZED	CHECKED	DATE
XRL	XRL	XRL	08-18-14

DESIGN DATE	REV. NO.	DRAWING	SHEET NO	FILE	SHEET
08-18-14	1	-----	-----	-----	C05

	DEFAULTS AND/OR STYLE	FIELD RECORD
SEAR II EXECUTIVE PROGRAM	VERSION, 9V645A01Y	VERSION,
APPLICATION PROGRAM (IF LOADED)	VERSION, _____	VERSION,

FIELD TO PROVIDE FOR AS-IN-SERVICE

SITE SET UP OPTIONS		
OPTION	SELECTION	
DATE	XX-XX-XXXX	
TIME	[XX:XX:XX]	
DAYLIGHT SAVINGS TIME	YES ■ NO ☐	
TIME ZONE	■ EST ☐ CST	
SITE NAME	MAIN STREET	
MILEPOST	OS-186.20	
DOT NUMBER	546514R	
TESTER TYPE	■ CROSSING ☐ WAYSIDE	
DATE FORMAT	■ MM-DD-YYYY ☐ DD-MM-YYYY	
TEMP FORMAT	■ FAHRENHEIT ☐ CELSIUS	
INDICATE HOLDOFF	0	
INDICATE REFRESH	60	
SITE TYPE	☐ NO COMMUNICATION ☐ DIAL-UP ■ COLLECTOR ☐ NODE ☐ BULLHORN/MODE ☐ CDS902X	
SITE ATCS ADDRESS	7.125.412.019.99.01 (7.RRR.LLL.GGG.99.01)	NOTE 5
OFFICE ADDRESS	2.125.00.0000 (2.RRR.NN.DDDD)	
OFFICE SITE ADDRESS	NA	
BACK UP SITE ADDRESS 1	NA	
BACK UP SITE ADDRESS 2	NA	
POLL ID (1-99)	1	
GEN/ATCS MODE	☐ GENISYS ■ GEN/ATCS	
XID DISABLED	■ YES ☐ NO	
OFFICE COM. DEVICE	☐ DIRECT ☐ MCM (RS232) ☐ MCM (ECH) ■ WAG (ECHELON) ☐ DIAL UP (RS232) ☐ S200 RADIO (RS422)	NOTE 6
RADIO ATCS ADDRESS	7.125.XXX.XXX.XX.XX	
OFFICE PHONE NUMBER	1-XXX-XXX-XXXX	
INIT. STRING		
FIELD COMM	☐ VHF (ECH) ☐ VHF (RS232) ☐ WAG (ECH) ☐ SS (RS232) ■ NONE	
USER PORT	BAUD RATE (9600)	
AUX PORT	BAUD RATE (9600)	NOTE 7
COMM PORT	BAUD RATE (9600)	

NOTES,

1. LARGE CONFIGURATION ASSIGNS RECORDER INPUTS FOR USE WHEN DIGITAL I/O MODULE REQUIRED.
2. IF WARNING DEVICE = NONE MAIN/STANDBY OPTION NOT SHOWN.
3. IF VHF COMMUNICATIONS = NO THEN DTMF ACTIVATION AND CHANNEL OPTIONS ARE NOT SHOWN.
4. LAST 3 DIGITS OF DOT NO. FOR FIRST ACTIVATION CODE.
5. DEFAULT ADDRESS 7.620.100.100.99.01 USED FOR STAND ALONE LOCATIONS.
6. OPTIONS NOT SHOWN IF SITE TYPE = NO COMMUNICATIONS.
7. FORMAT AS, BAUD, DATA BITS, PARITY STOP BITS, FLOW CONTROL.

SITE SET UP OPTIONS CONT.		
	OPTION	SELECTION
	RAILROAD NUMBER	125
NOTE 1	CROSSING CONFIGURATION	STANDARD ■ LARGE ☐ REMOTE ☐ SPLIT GATE ☐ ISL ONLY ☐ CP COLLECTOR ☐
	NUMBER OF XR INPUTS	0 ☐ 1 ■ 2 ☐ 3 ☐ 4 ☐
	NUMBER OF ISL INPUTS	0 ☐ 1 ☐ 2 ■ 3 ☐ 4 ☐
	CONSTANT WARNING DEVICE	GCP ☐ OTHER ■ NONE ☐
	TOTAL NUMBER OF GCP NODES	1 ☐ 2 ☐ 3 ☐ 4 ☐ 5 ☐
	NUMBER OF REDUNDANT GCP	1 ☐ 2 ☐ 3 ☐ 4 ☐
	CROSSING CONTROLLER 1	SSCC IIIA / PLUS ☐ SSCC IV ☐ OTHER ☐ NONE ■
	POK2	YES ■ NO ☐
NOTE 2	MAIN / STANDBY	YES ■ NO ☐
	AUXILIARY TRACKS	0 ☐ 1 ■ 2 ☐
	ENTRANCE GATE	0 ☐ 1 ☐ 2 ■ 3 ☐ 4 ☐ 5 ☐ 6 ☐ 7 ☐ 8 ☐
	EXIT GATES	0 ■ 1 ☐ 2 ☐ 3 ☐ 4 ☐
	GATE POSITION FAIL 10-60 SEC	25
	NUMBER OF UAX INPUTS	0 ■ 1 ☐ 2 ☐
	BATTERY BANKS	1 ☐ 2 ☐ 3 ■ 4 ☐ 5 ☐ 6 ☐
	OB RESOLUTION	.2 ■ .5 ☐ 1.0 ☐
	X-B RESOLUTION	.2 ■ .5 ☐ 1.0 ☐ NOT PRESENT ☐
	B-G RESOLUTION	.2 ☐ .5 ☐ 1.0 ■ NOT PRESENT ☐
	X-B2 RESOLUTION	.2 ☐ .5 ☐ 1.0 ☐ NOT PRESENT ■
	B-G2 RESOLUTION	.2 ☐ .5 ☐ 1.0 ☐ NOT PRESENT ■
	X-B3 RESOLUTION	.2 ☐ .5 ☐ 1.0 ☐ NOT PRESENT ■
	PREEMPTION	NORMAL ☐ ADVANCED ☐ NO ■
	KDR INPUT	YES ■ NO ☐
NOTE 3	VHF COMMUNICATOR	YES ☐ NO ■
NOTE 4	ACTIVATION CODE 1	514
	ACTIVATION CODE 2	XXX
	ACTIVATION CODE 3	XXX
	ACTIVATION TIMEOUT (30 TO 600 SECONDS)	60
	iLOD MODULES	0 ☐ 1 ☐ 2 ■ 3 ☐ 4 ☐ 5 ☐ 6 ☐
	ANY LED BULBS	NO ☐ YES ■
	AUTO INSPECTIONS	YES ■ NO ☐
	BELL ON	GATES LOWERING ■ GATES MOVING ☐ ALWAYS ☐
	GROUND FAULT DETECTORS	YES ■ NO ☐
	BATTERIES ON GFT1	1 ☐ 2 ■
	FULL APPROACH MOVE ALARMS	ACTIVATED ■ DO NOT ACTIVATE ☐

LIT BULB COUNT ON EACH CIRCUIT	NO.	TYPE OF BULB	CURRENT READING IN AMP. AT APPROX. 10.0 V BULB VOLTAGE
CURRENT SENSOR (1) E1C, LAMP SET UP	4	☐BULBS ■LED	6.0
CURRENT SENSOR (1) E2A, LAMP SET UP	4	☐BULBS ■LED	6.0
CURRENT SENSOR (2) E2C, LAMP SET UP	4	☐BULBS ■LED	6.0
CURRENT SENSOR (2) E1A, LAMP SET UP	4	☐BULBS ■LED	6.0

MEASURE BATTERY VOLTAGE AT INPUT	
BATTERY VOLTAGE OB	XXXX VOLTS
BATTERY VOLTAGE X-B	XXXX VOLTS
BATTERY VOLTAGE B-G	XXXX VOLTS

FIELD TO PROVIDE FOR AS-IN-SERVICE

CSX TRANSPORTATION
RAIL TRANSPORT GROUP ENGINEERING
COMMUNICATIONS AND SIGNALS

MAIN STREET (546514R)

SEAR II CONFIGURATION AND FUNCTIONS
SMITHBORO, IL M.P. OS-186.20

1TRKHXP3R.C06
REV. 07-03-13

DESIGNED	DIGITIZED	CHECKED	DATE
XRL	XRL	XRL	08-18-14

DESIGN DATE	REV. NO.	DRAWING	SHEET NO	FILE	SHEET
11-10-14	2	-----	-----	-----	C06

DISCRETE INPUTS	DI 01	DI 02	DI 03	DI 04	DI 05	DI 06
CHANNEL	1	2	3	4	5	6
NAME	XR1	(40DAXR)	ISLAND 1 (TRACK)	ISLAND 2 (TRACK)	MAIN/STANDBY	BELL OUT (BELL PWR)
TAG	XR1 (XR)	(40DAXR)	ISL1	ISL2	M/S	BELL OUT (BELL PWR)
OFF NAME	DOWN (XR)	DOWN (EB DAX)	DOWN (ISL1)	DOWN (ISL2)	DOWN (STANDBY)	OFF (BELL PWR)
ON NAME	UP (XR)	UP (EB DAX)	UP (ISL1)	UP (ISL2)	UP (MAIN)	ON (BELL PWR)
ON DEBOUNCE TIME	100 ms	100 ms	100 ms	100 ms	100 ms	100 ms
OFF DEBOUNCE TIME	100 ms	100 ms	100 ms	100 ms	100 ms	100 ms
TOGGLE PERIOD	1000 ms	1000 ms	1000 ms	1000 ms	1000 ms	1000 ms

TSS INPUTS	DI 07	DI 08	DI 09	DI 10
CHANNEL	7	8	9	10
NAME	AGP	BGP	AGDP	BGDP
TAG	AGP (GP)	BGP (GP)	AGDP	BGDP
OFF NAME	LIGHTS FLASH	LIGHTS FLASH	NOT HORIZ	NOT HORIZ
ON NAME	GATE VERTICAL	GATE VERTICAL	GATE HORIZ	GATE HORIZ
ON DEBOUNCE TIME	100 ms	100 ms	100 ms	100 ms
OFF DEBOUNCE TIME	100 ms	100 ms	100 ms	100 ms
TOGGLE PERIOD	1000 ms	1000 ms	1000 ms	1000 ms

DISCRETE INPUTS	DI 11	DI 12	DI 13
CHANNEL	11	12	13
NAME	GATE CONTROL	DTMF	(13DAXR) AUX
TAG	GCOUT1 (GCK)	DTMF-REC	AUX TRACK
OFF NAME	OFF (DESCENT)	OFF (NO GATE KEYED)	DOWN (WBDAX)
ON NAME	ON (ASCENT ON)	ON (ACTIVATE)	UP (WBDAX)
ON DEBOUNCE TIME	100 ms	100 ms	100 ms
OFF DEBOUNCE TIME	100 ms	100 ms	100 ms
TOGGLE PERIOD	1000 ms	1000 ms	1000 ms

GFT INPUTS	DI 14	DI 15
CHANNEL	14	15
NAME	GND FAULT TESTER 1 (GFT1,2)	GND FAULT TESTER 2 (GFT3,4)
TAG	GFT1 (GFT1 DATA)	GFT2 (GFT2 DATA)
BATTERY 1 NAME	OB (GND FAULT)	B-G (GND FAULT)
BATTERY 1 TAG	OB (GND FAULT)	B-G (GND FAULT)
BATTERY 2 NAME	X-B (GND FAULT)	SP.
BATTERY 2 TAG	X-B (GND FAULT)	SP.

DISCRETE INPUTS	DI 16	DI 17	DI 18
CHANNEL	16	17	18
NAME		120 VAC	POK2
TAG	PREEMPTION	120 VAC	POK2
OFF NAME		OFF (ALL POWER OFF)	OFF (ALL POWER OFF)
ON NAME		ON (ALL POWER ON)	ON (ALL POWER ON)
ON DEBOUNCE TIME	1000 ms	100 ms	100 ms
OFF DEBOUNCE TIME	1000 ms	100 ms	100 ms
TOGGLE PERIOD	1000 ms	1000 ms	1000 ms

BATTERY INPUTS	BI1	BI2	BI3
CHANNEL	1	2	3
NAME	OB (ELECTRONIC BATT)	X-B (BULB BATT)	B-G (GATE BATT)
TAG	OB	X-B	B-G
SAMPLE PERIOD (ms)	500 (ms)	500 (ms)	500 (ms)
RESOLUTION (V)	0.2 (VOLTS)	0.2 (VOLTS)	1.0 (VOLTS)
AVGERAGING SAMPLES	32 SAMPLES	32 SAMPLES	32 SAMPLES

RELAYS	RO1	RO2
CHANNEL	1	2
NAME	GFT TEST	AC POWER TEST (ACRLY)
TAG	SELF TEST	AC POWER TEST (ACRLY)
OFF STATE NAME	NOT TESTING	OFF (ACR DN)
ON STATE NAME	TESTING	ON (ACR UP)
UNKNOWN STATE NAME	PULSE	PULSE
ON PULSE TIME (s)	1 (s)	1 (s)
OFF PULSE TIME (s)	1 (s)	1 (s)
TOGGLE PERIOD (s)	1 (s)	1 (s)
DUTY CYCLE	50	50

NOTE, ( ) DENOTES NOMENCLATURE FOR CLARIFICATION AND WILL NOT DISPLAY ON LOG REPORTS.

CSX TRANSPORTATION

RAIL TRANSPORT GROUP ENGINEERING
COMMUNICATIONS AND SIGNALS

MAIN STREET (546514R)

SEAR II CHANNELS
SMITHBORO, IL M.P. OS-186.20

1TRKHXP3R.C07
REV. 07-03-13

DESIGNED	DIGITIZED	CHECKED	DATE
XRL	XRL	XRL	08-18-14

DESIGN DATE	REV. NO.	DRAWING	SHEET NO	FILE	SHEET
08-18-14	1	-----	-----	-----	C07

WAYSIDE ACCESS GATEWAY CONFIGURATION	
SITE ATCS ADDRESS	7.125.412.019.01.01 7.125.LLL.GGG.SS.DD
SERIAL INTERFACE	9600,NONE,8,1/NOFLOW
SERIAL FORMAT	RAW
WAG TEST MODE	DISABLED
ECHELON ADDRESS	01.01
UDP PORTS	5000, 5001, 5002, 5003
ROUTE TABLE EXPIRY	5400 SEC
BROADCAST MEDIUM	IP ETHERNET
TCP PORTS	6001
DHCP SERVER	DISABLED
IP ADDRESS	192.168.13.1
TYPE 7 ROUTE LENGTH	12--7RRRLLLGGGSS
IP NETWORK MASK	255.255.255.000

NOTE TO INSPECTOR,
AT INSTALLATION OF CDMA BY COM.
MARK-UP CONFIGURATION TABLE FOR
AS IN SERVICE PLANS

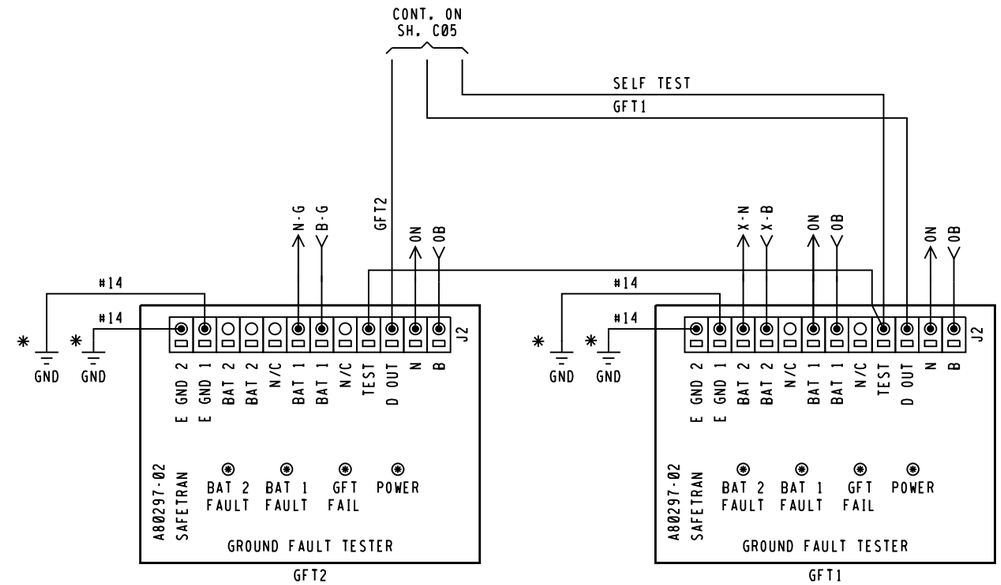

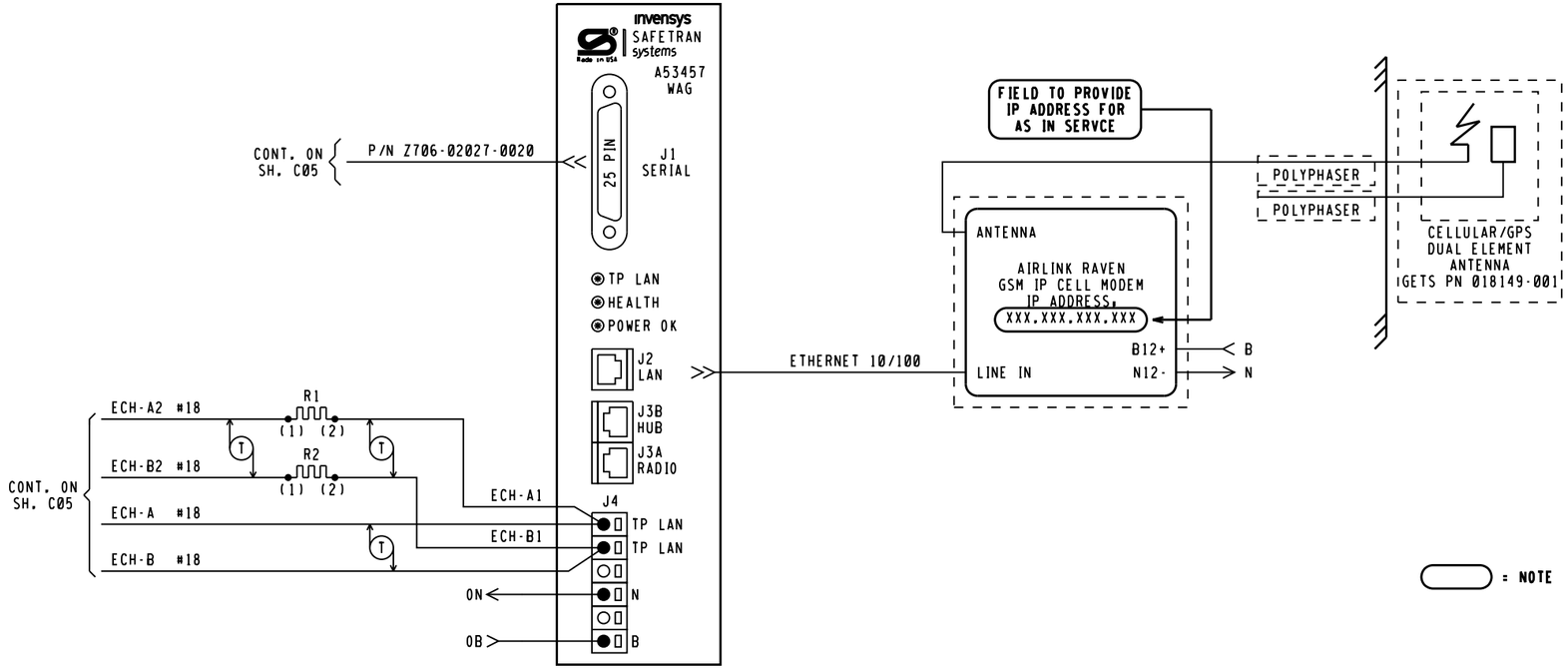

COMM NOTES,

1. WAG J3A PINOUTS,
   4 & 5 = +12VDC RADIO OUT
   7 & 8 = GND RADIO RETURN
2. WAG AND SEARII ECHELON COMM THROUGH GCP3000 LONTALK PROTOCOL CONNECTION

NOTES,

1. ALL WIRING #16 UNLESS NOTED OTHERWISE.
2. ✱ = EARTH GROUND REF. TERMINALS REQUIRED FOR DETECTION. DO NOT JUMPER TERMINALS. MUST BE CONNECTED TO DIFFERENT POINTS OF BUNGALOW.
3. R1 & R2 = .5 WATT, 20Ω RESISTOR

= NOTE

CSX TRANSPORTATION
RAIL TRANSPORT GROUP ENGINEERING
COMMUNICATIONS AND SIGNALS

MAIN STREET (546514R)

WAYSIDE ACCESS GATEWAY
SMITHBORO, IL M.P. OS-186.20

1TRKHXP3R.C08
REV. 07-03-13

DESIGNED	DIGITIZED	CHECKED	DATE
XRL	XRL	XRL	08-18-14

DESIGN DATE	REV. NO.	DRAWING	SHEET NO	FILE	SHEET
08-18-14	1	-----	-----	-----	C08