PRIME WARNING TIME = 25 SECONDS

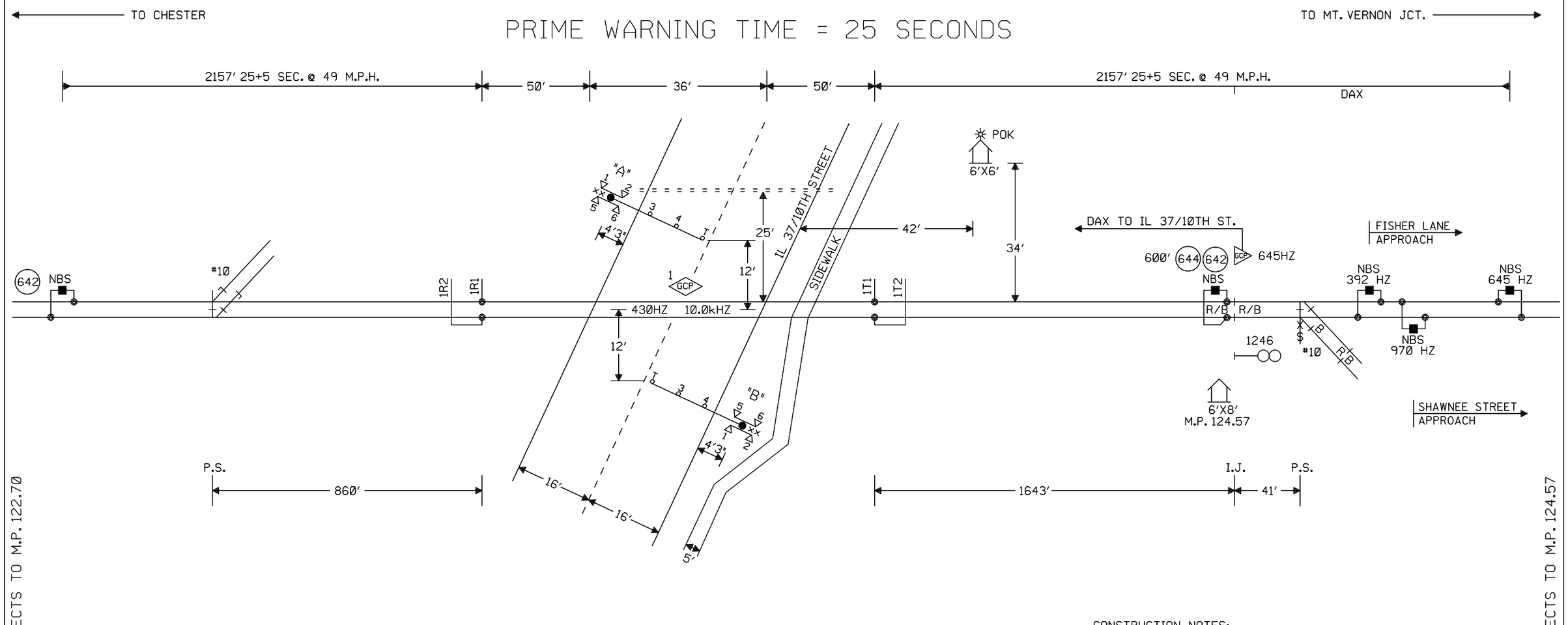

NOTES:

⊗ = TWISTED WIRES
INSULATED 1 TWIST PER FT.
ALL TRACK WIRES 2C. #6

TRANSMITTER AND RECEIVER LEADS TO BE SEPARATED BY AT LEAST 12" IN TRENCH, LENGTHS SHOULD NOT EXCEED MANUFACTURES RECOMMENDATION.

TOP OF FOUNDATION TO BE AT SAME ELEVATION AS THE SURFACE OF THE TRAVELED WAY & NO MORE THAN 4" ABOVE THE SURFACE OF THE GROUND.

ALL BUNGALOW WIRING TO BE #16 AWG FLEX UNLESS OTHERWISE SPECIFIED EXCEPT ALL GROUND WIRE TO BE #6 AWG FLEX OR LARGER.

ALL WIRING IN GATE MECHANISM TO BE #10 "AWG FLEX".

REFER TO UP STANDARD DWG FOR BUNGALOW GROUNDING.

PORTABLE GENERATOR EXTENSION CORD FOR 240V TO 240V IS PROVIDED AS WELL AS A 120V TO 240V ADAPTER.

ALL LIGHTS TO BE 12" ROUNDELS.

= = = = = = 4" X 50' CONDUIT

LIGHTS: LED LIGHTS

GATE A: 20'
GATE B: 20'

xx = BELL

CONSTRUCTION NOTES:

1. INSTALL REMOTE HOUSE AT M.P. 124.57. SHOP TO WIRE FOR AND FIELD TO TRANSFER WAYSIDE EQUIPMENT TO NEW HOUSE.
2. INSTALL RETAINING WALL AROUND "A" GATE
3. CABIN PLACEMENT TO BE VERIFIED BY ICC.

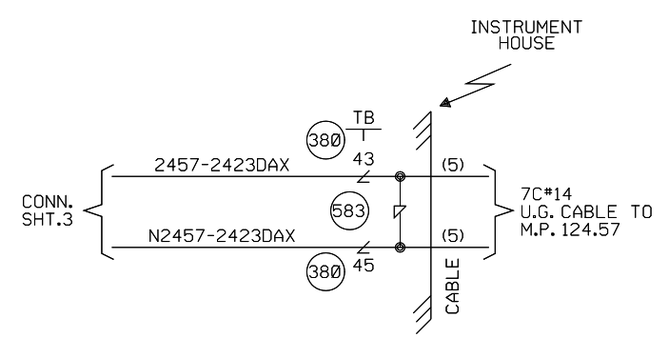

OFFSET AND ISLAND DISTANCES TO BE VERIFIED BY FIELD

W(S) ←—○—→ E(N)

CABLE TABULATION

CABLE NO. 5 7C#14 U.G.B.T. HOUSE TO M.P. 124.57

NEW SHEET

					Designed: 05/05/14 INSTALL FLASHERS W/GATES & CWT. AT IL37/10TH ST. M.P. 124.23 Rec#: WO#: 24093 IS: /JPW / /SSS/JTB	MODIFICATION LEVEL Q. A. LAST LEVEL CHECKED DU LAST LEVEL MOD THIS TYPICAL DU LAST LEVEL BY DESIGNER DU CHANGED FROM TYPICAL? Y REV 01.24.11 4K 1TKBG.1	CIRCUIT MODIFICATIONS ARE NOT TO BE MADE WITHOUT AUTHORITY FROM THE OFFICE OF SIGNAL DESIGN	Date: 05/05/14 Des: SSS Chk: JPW AFE: 24093	UNION PACIFIC RAILROAD MT. VERNON, ILLINOIS ILLINOIS 37/10TH STREET PINCKNEYVILLE SUBDIVISION Office of AVP Engineering - Signal Omaha, Nebraska	Sh.: 1 DOT 167709G MP: 124.23 ID: 127612423.1X

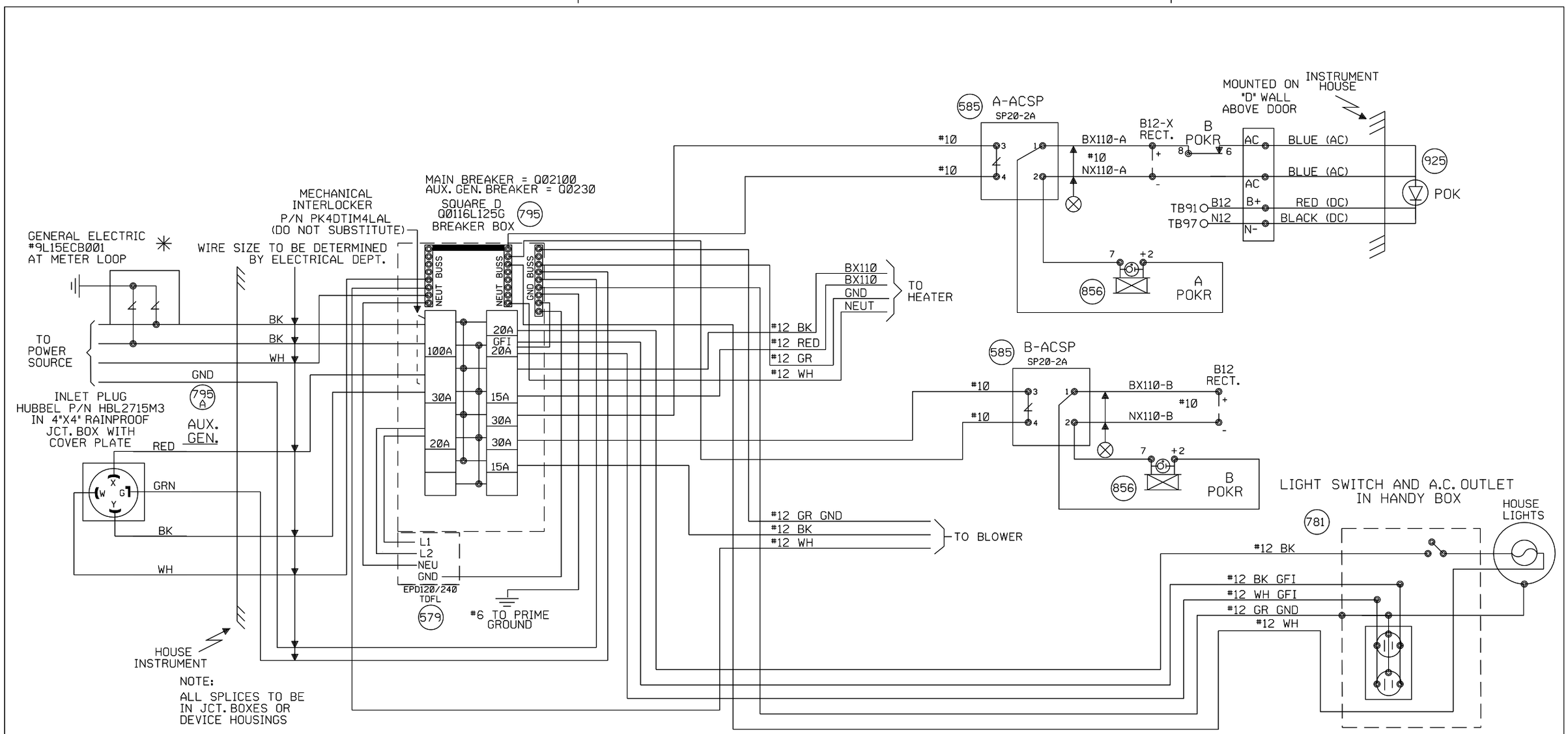

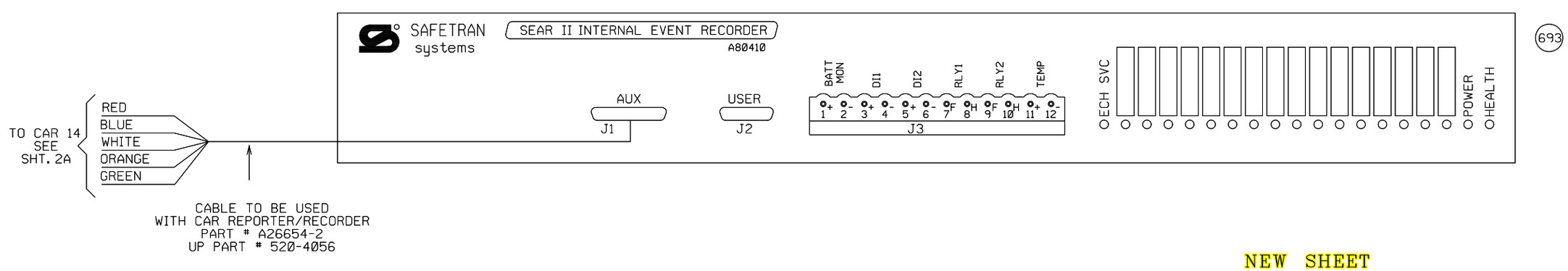

NEW SHEET

Designed: 05/05/14
INSTALL FLASHERS
W/GATES & CWT.
AT IL37/10TH ST.
M.P. 124.23
Rec#: WO#: 24093
IS: /NBT
/ /SSS/JTB

MODIFICATION LEVEL	
Q.A. LAST LEVEL CHECKED	DU
LAST LEVEL MOD THIS TYPICAL	DU
LAST LEVEL BY DESIGNER	DU
CHANGED FROM TYPICAL?	Y

REV 01.24.11 4K SEARAC.2

CIRCUIT MODIFICATIONS ARE NOT TO BE MADE WITHOUT AUTHORITY FROM THE OFFICE OF SIGNAL DESIGN

Date: 05/05/14
Des: SSS
Chk: NBT
AFE: 24093

UNION PACIFIC RAILROAD
MT. VERNON, ILLINOIS
ILLINOIS 37/10TH STREET
PINCKNEYVILLE SUBDIVISION
Office of AVP Engineering - Signal Omaha, Nebraska

Sh.: 2
DOT 167709G
MP: 124.23
ID: 127612423.2X

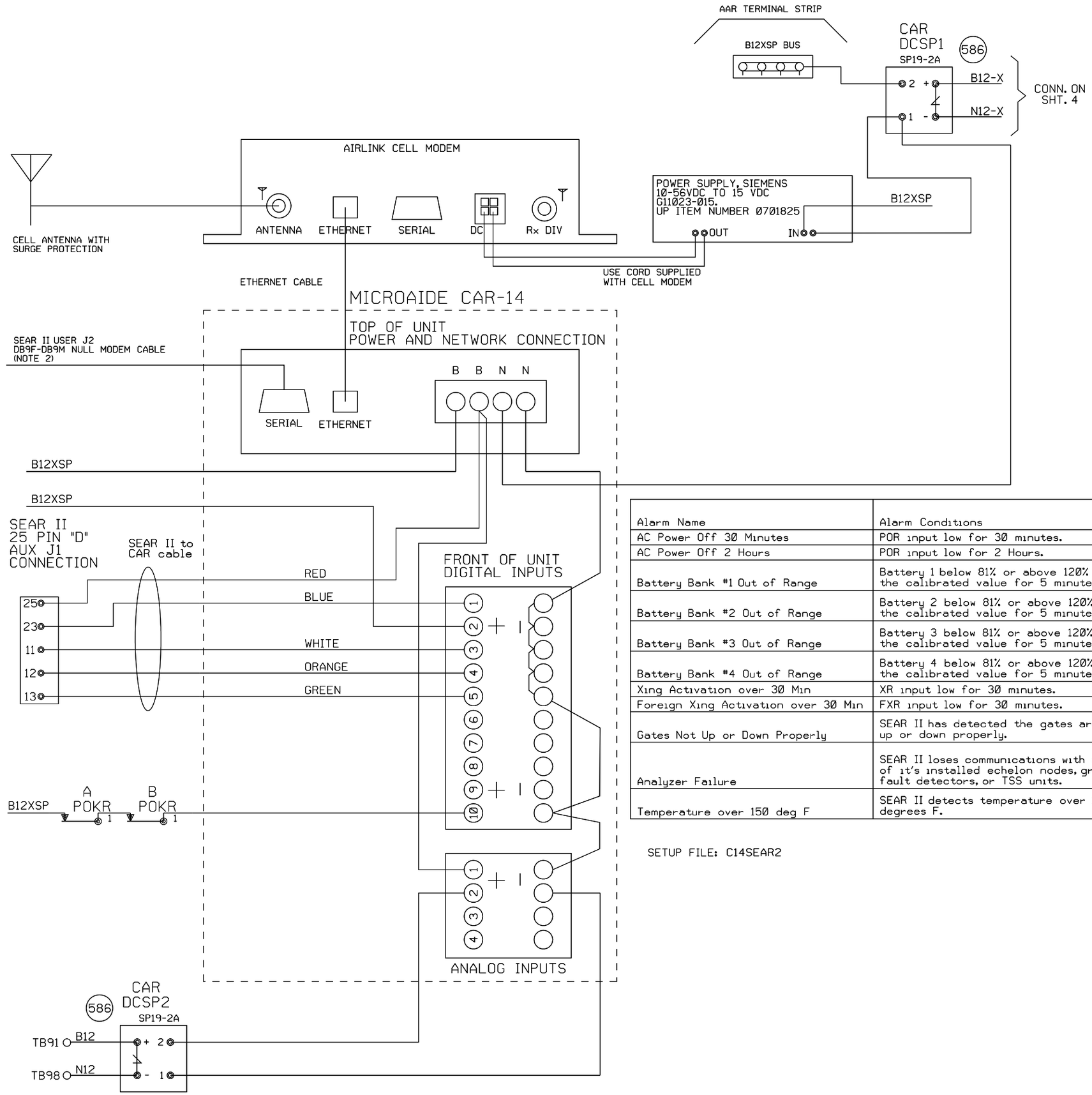

NOTE:
1) DO NOT JUMPER UNUSED INPUTS
2) THE CAR14 SERIAL PORT IS AVAILABLE TO ADD REMOTE CONNECTIVITY TO EXISTING LOGGING EQUIPMENT. USE NULL MODEM CABLE WITH SHIELDING DISCONNECTED AT ONE OR BOTH SIDES.

ANALOG INPUTS:
A1) B12X BATTERY BANK
A2) B12 BATTERY BANK
A3) BATTERY BANK 3
A4) BATTERY BANK 4

DIGITAL INPUTS
D1) XR (BLUE WIRE)
D2) FOREIGN XR
D3) ANALYZER FAILURE (WHITE WIRE)
D4) HIGH TEMPERATURE (ORANGE WIRE)
D5) GATES NOT UP OR DOWN PROPERLY (GREEN WIRE)
D10) POWER OFF INDICATION

Alarm Name	Alarm Conditions	Alarm Clearing Conditions	Cleared by Maintainer Mode?
AC Power Off 30 Minutes	POR input low for 30 minutes.	POR input high for 5 minutes.	No
AC Power Off 2 Hours	POR input low for 2 Hours.	POR input high for 5 minutes.	No
Battery Bank #1 Out of Range	Battery 1 below 81% or above 120% of the calibrated value for 5 minutes.	Battery 1 within acceptable range for 5 minutes.	No
Battery Bank #2 Out of Range	Battery 2 below 81% or above 120% of the calibrated value for 5 minutes.	Battery 2 within acceptable range for 5 minutes.	No
Battery Bank #3 Out of Range	Battery 3 below 81% or above 120% of the calibrated value for 5 minutes.	Battery 3 within acceptable range for 5 minutes.	No
Battery Bank #4 Out of Range	Battery 4 below 81% or above 120% of the calibrated value for 5 minutes.	Battery 4 within acceptable range for 5 minutes.	No
Xing Activation over 30 Min	XR input low for 30 minutes.	XR input high for 10 seconds.	Yes
Foreign Xing Activation over 30 Min	FXR input low for 30 minutes.	FXR input high for 10 seconds.	Yes
Gates Not Up or Down Properly	SEAR II has detected the gates are not up or down properly.	SEAR II has detected the gates are up or down properly.	No
Analyzer Failure	SEAR II loses communications with any of it's installed echelon nodes, ground fault detectors, or TSS units.	SEAR II has recovered after an analyzer failure alarm.	No
Temperature over 150 deg F	SEAR II detects temperature over 150 degrees F.	SEAR II sensor detects temperature is OK after a High-Temp alarm.	No

SETUP FILE: C14SEAR2

NEW SHEET

Designed: 05/05/14
INSTALL FLASHERS W/GATES & CWT, AT IL37/10TH ST. M.P. 124.23
Rec#: WO#: 24093
IS: /NBT
/SSS/JTB

MODIFICATION LEVEL	
Q.A. LAST LEVEL CHECKED	DU
LAST LEVEL MOD THIS TYPICAL	DU
LAST LEVEL BY DESIGNER	DU
CHANGED FROM TYPICAL?	Y

REV 01.24.11 4K ACDCCAR14SII.3

CIRCUIT MODIFICATIONS ARE NOT TO BE MADE WITHOUT AUTHORITY FROM THE OFFICE OF SIGNAL DESIGN

Date: 05/05/14
Des: SSS
Chk: NBT
AFE: 24093

UNION PACIFIC RAILROAD
MT. VERNON, ILLINOIS
ILLINOIS 37/10TH STREET
PINCKNEYVILLE SUBDIVISION
Office of AVP Engineering - Signal Omaha, Nebraska

Sh.: 2A
DOT 167709G
MP: 124.23
ID: 127612423.2AX

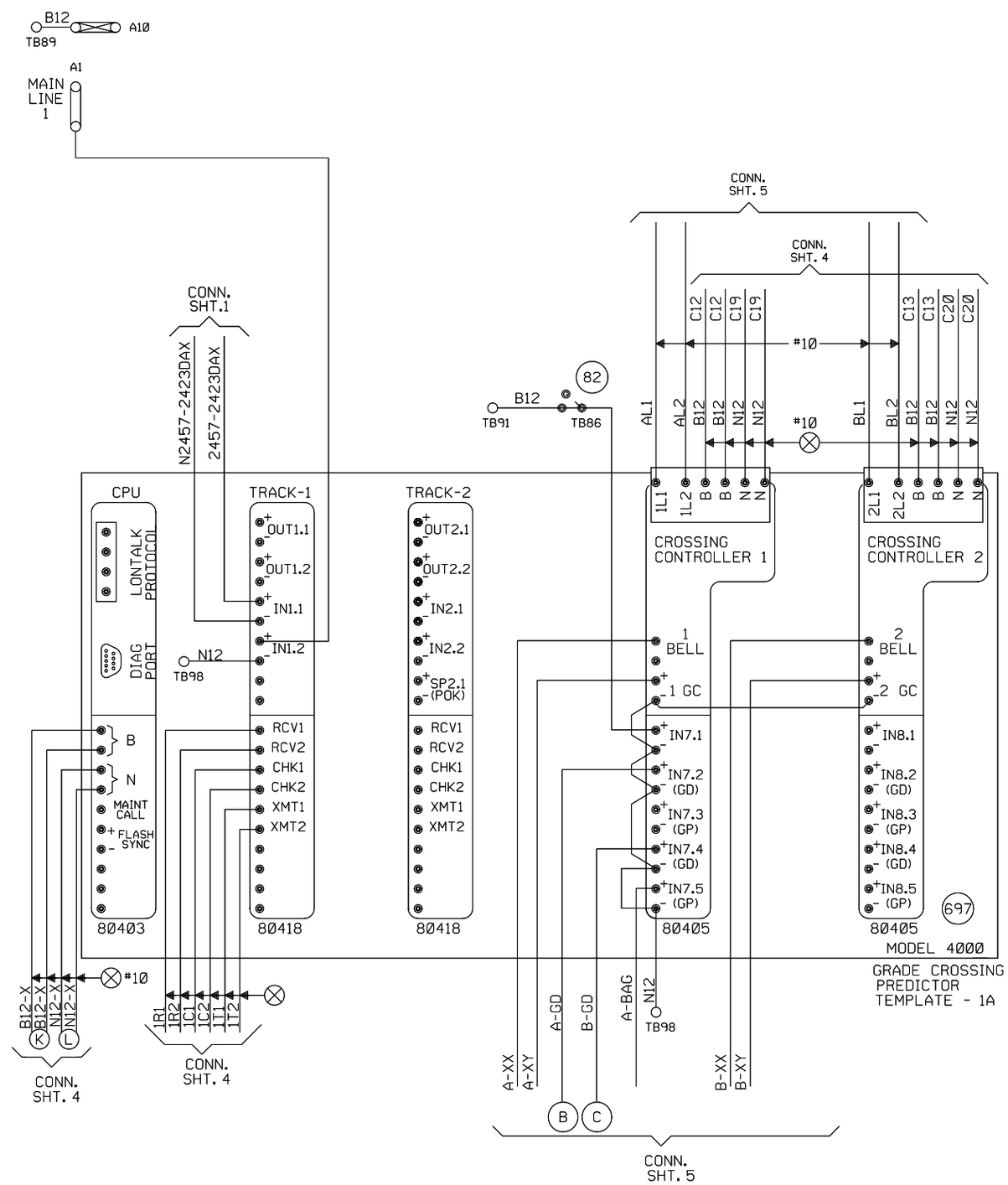

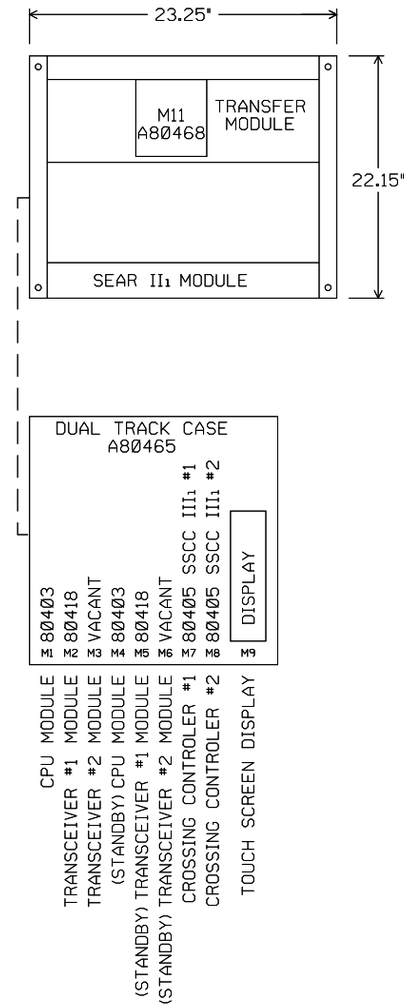

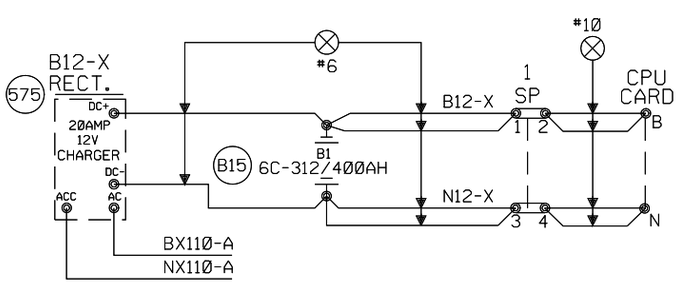

"Mf" FREQUENCY (HZ)	MAXIMUM TRANSMIT WIRE LENGTH (FEET)
86	100
114	125
156	150
211	200
285-970	250

NOTE:
EACH TRANSMITTER TO RAIL WIRE FROM XMT1 AND XMT2 MUST NOT EXCEED THE MAXIMUM LENGTH SPECIFIED IN THE TABLE SHOWN. THE RECEIVER WIRE LENGTH IS NOT CRITICAL. DOES NOT APPLY TO 6 TRACK WIRE APPLICATION.

NEW SHEET

Designed: 05/05/14
INSTALL FLASHERS W/GATES & CWT, AT IL37/10TH ST. M.P. 124.23
Rec#: WO#: 24093
IS: /NBT
/SSS/JTB

MODIFICATION LEVEL	
Q. A. LAST LEVEL CHECKED	DU
LAST LEVEL MOD THIS TYPICAL	DU
LAST LEVEL BY DESIGNER	DU
CHANGED FROM TYPICAL?	Y

REV 01.24.11 4K 2TKGF.3

CIRCUIT MODIFICATIONS ARE NOT TO BE MADE WITHOUT AUTHORITY FROM THE OFFICE OF SIGNAL DESIGN

Date: 05/05/14
Des: SSS
Chk: NBT
AFE: 24093

UNION PACIFIC RAILROAD
MT. VERNON, ILLINOIS
ILLINOIS 37/10TH STREET
PINCKNEYVILLE SUBDIVISION
Office of AVP Engineering - Signal Omaha, Nebraska

Sh.: 3
DOT 167709G
MP: 124.23
ID: 127612423.3X

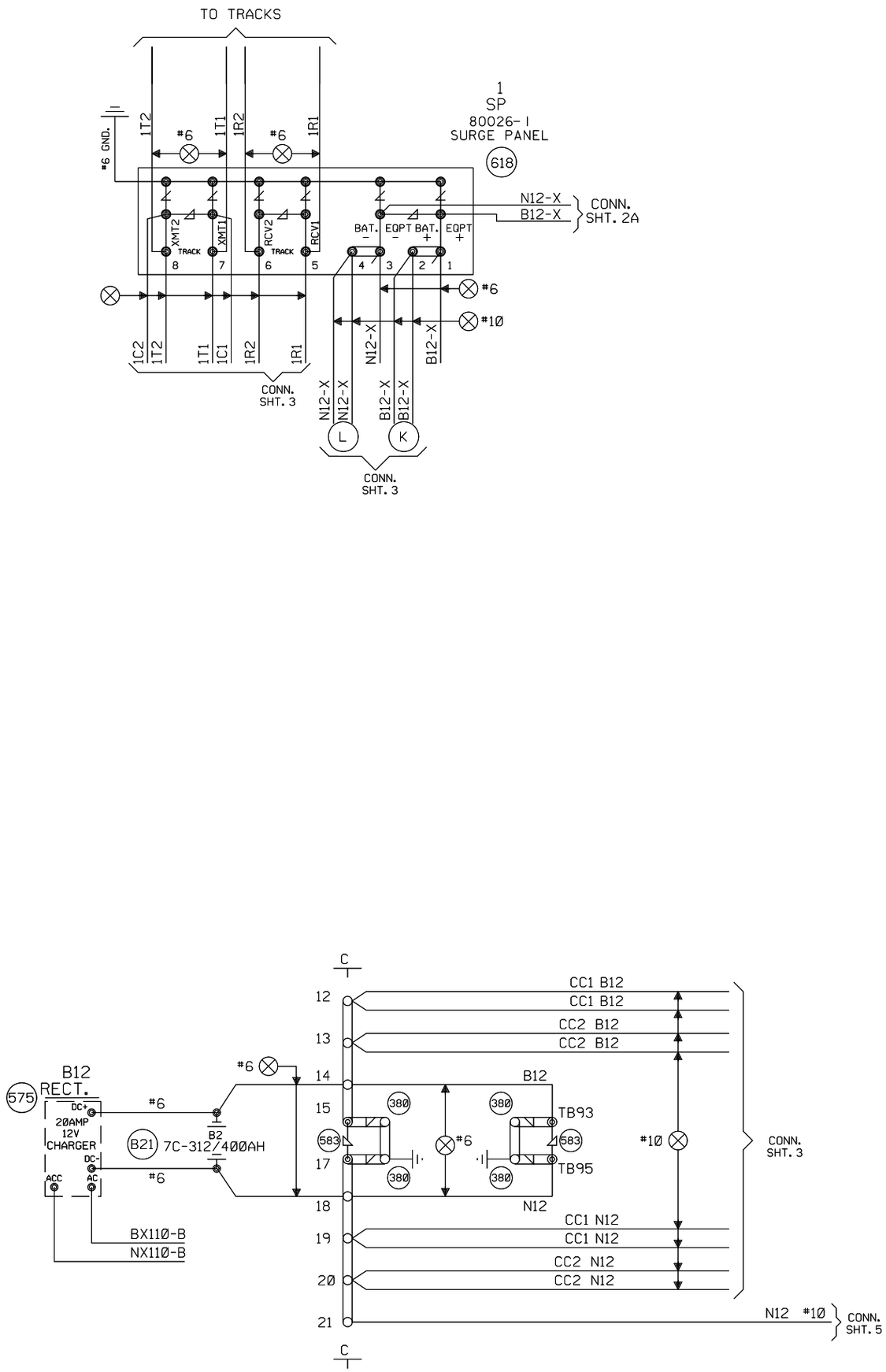

NEW SHEET

Designed: 05/05/14	MODIFICATION LEVEL		
INSTALL FLASHERS W/GATES & CWT. AT IL37/10TH ST. M.P. 124.23	Q.A. LAST LEVEL CHECKED	DU	
	LAST LEVEL MOD THIS TYPICAL	DU	
	LAST LEVEL BY DESIGNER	DU	
Rec#: WO#: 24093	CHANGED FROM TYPICAL?	Y	
IS: /NBT			
/ /SSS/JTB	REV 01.24.11 4K 4TKSPGFC.4		

CIRCUIT MODIFICATIONS ARE NOT TO BE MADE WITHOUT AUTHORITY FROM THE OFFICE OF SIGNAL DESIGN

Date: 05/05/14
Des: SSS
Chk: NBT
AFE: 24093

UNION PACIFIC RAILROAD
MT. VERNON, ILLINOIS
ILLINOIS 37/10TH STREET
PINCKNEYVILLE SUBDIVISION
Office of AVP Engineering - Signal Omaha, Nebraska

Sh.: 4
DOT 167709G
MP: 124.23
ID: 127612423.4X

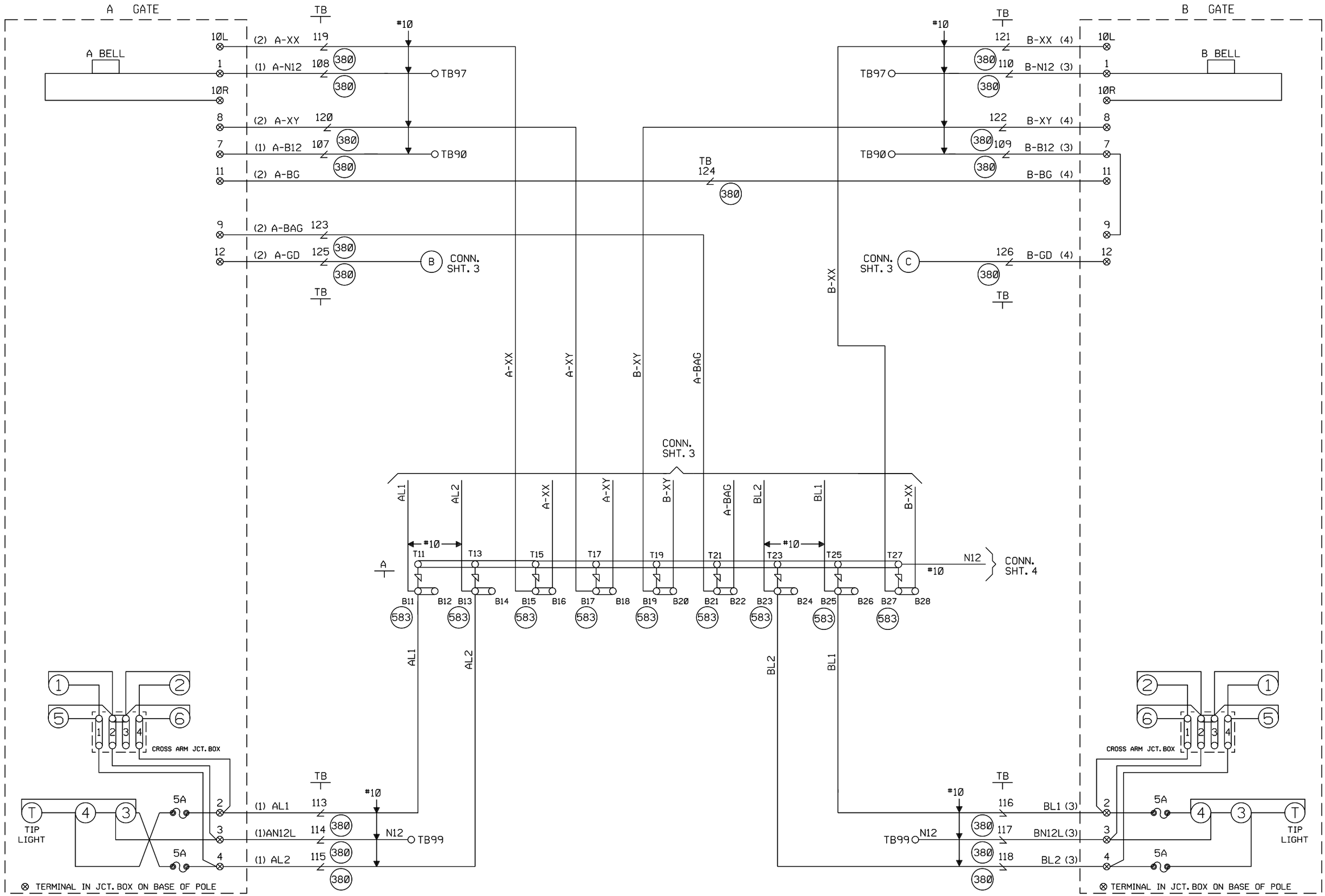

CABLE TABULATION

CABLE NO. 1 5C. NO.6 U.G.B.T. TO GATE A
CABLE NO. 2 7C. NO.14 U.G.B.T. TO GATE A
CABLE NO. 3 5C. NO.6 U.G.B.T. TO GATE B
CABLE NO. 4 7C. NO.14 U.G.B.T. TO GATE B

NEW SHEET

Designed: 05/05/14
INSTALL FLASHERS W/GATES & CWT, AT IL37/10TH ST. M.P. 124.23
Rec#: WO#: 24093
IS: /NBT
/ /SSS/JTB

MODIFICATION LEVEL	
Q. A. LAST LEVEL CHECKED	DU
LAST LEVEL MOD THIS TYPICAL	DU
LAST LEVEL BY DESIGNER	DU
CHANGED FROM TYPICAL?	Y

REV 01.24.11 4K GFCTYP.5

CIRCUIT MODIFICATIONS ARE NOT TO BE MADE WITHOUT AUTHORITY FROM THE OFFICE OF SIGNAL DESIGN

Date: 05/05/14
Des: SSS
Chk: NBT
AFE: 24093

UNION PACIFIC RAILROAD
MT. VERNON, ILLINOIS
ILLINOIS 37/10TH STREET
PINCKNEYVILLE SUBDIVISION
Office of AVP Engineering - Signal Omaha, Nebraska

Sh.: 5
DOT 167709G
MP: 124.23
ID: 127612423.5X

WCH 3593-E

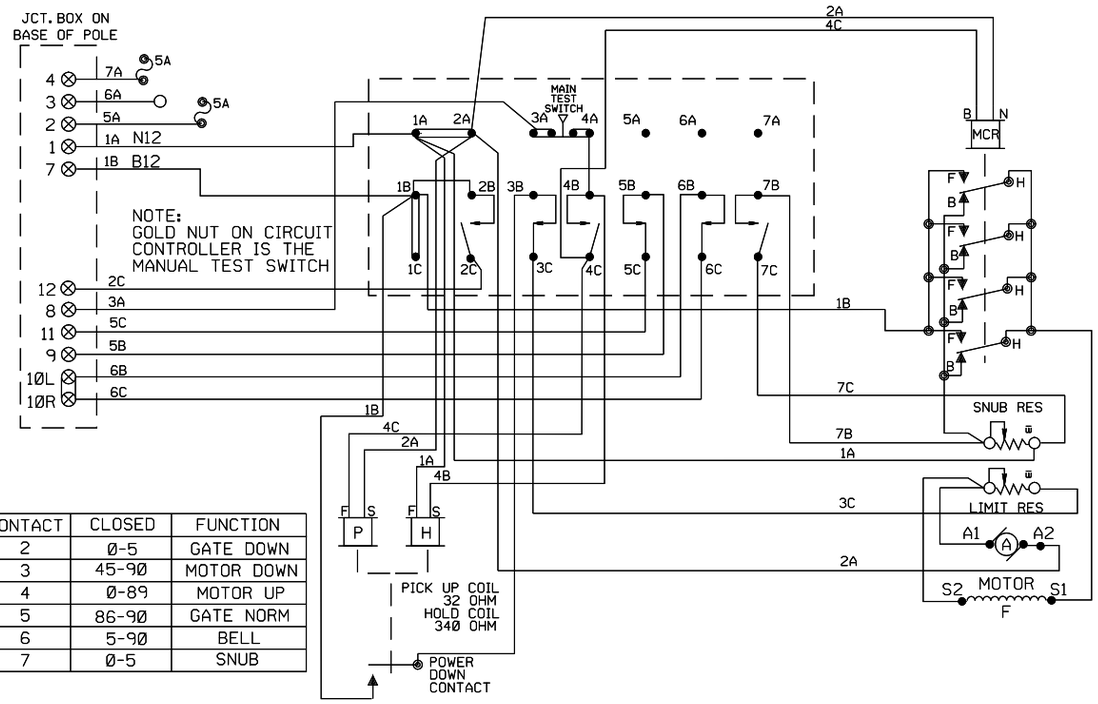

CONTACT	CLOSED	FUNCTION
2	0-5	GATE DOWN
3	45-90	MOTOR DOWN
4	0-89	MOTOR UP
5	86-90	GATE NORM
6	5-90	BELL
7	0-5	SNUB

WCH 3597-E

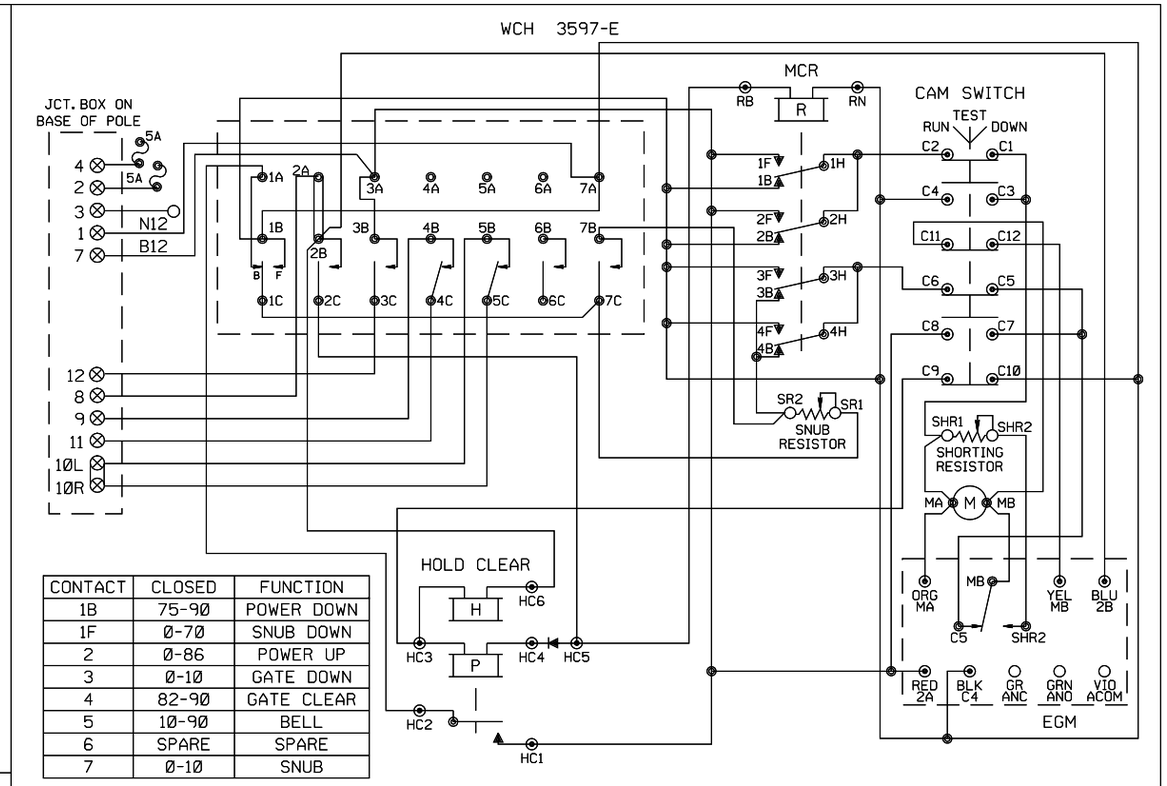

CONTACT	CLOSED	FUNCTION
1B	75-90	POWER DOWN
1F	0-70	SNUB DOWN
2	0-86	POWER UP
3	0-10	GATE DOWN
4	82-90	GATE CLEAR
5	10-90	BELL
6	SPARE	SPARE
7	0-10	SNUB

WCH 3597-RB

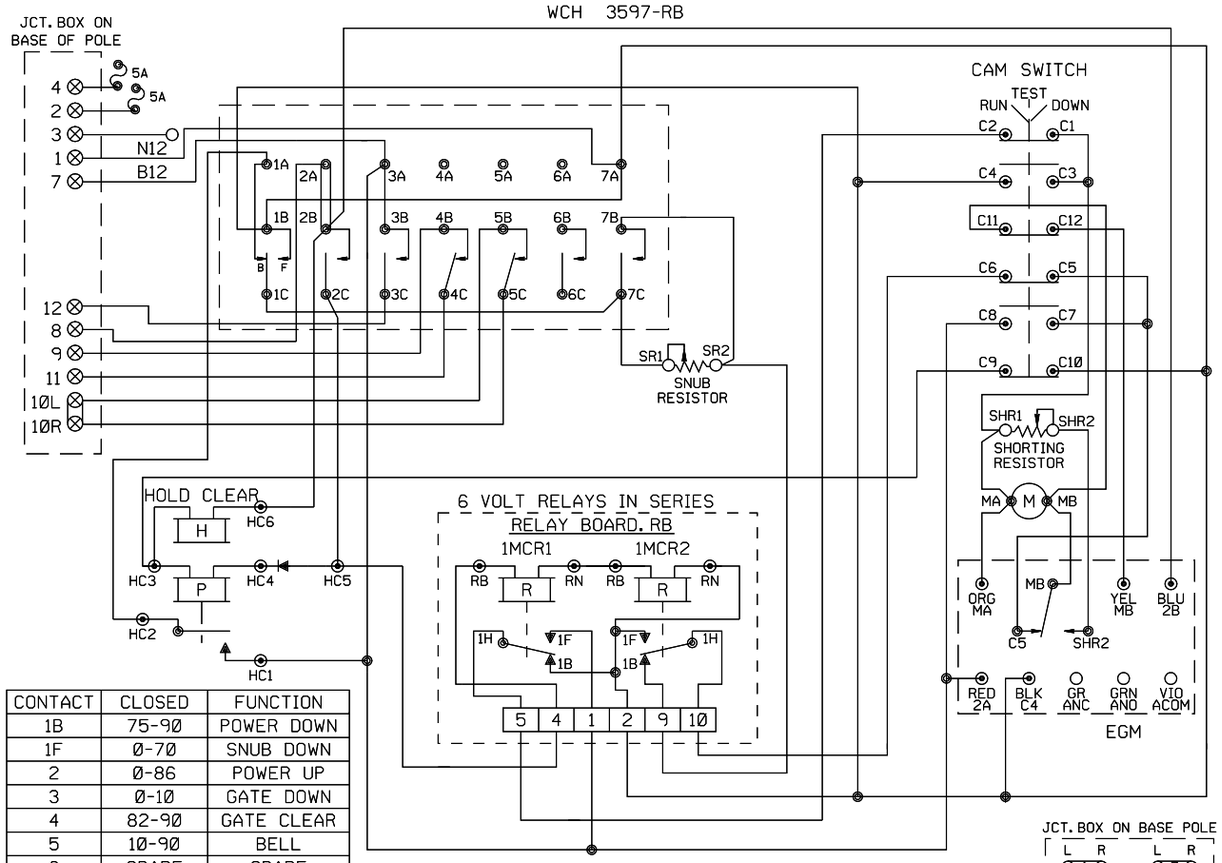

CONTACT	CLOSED	FUNCTION
1B	75-90	POWER DOWN
1F	0-70	SNUB DOWN
2	0-86	POWER UP
3	0-10	GATE DOWN
4	82-90	GATE CLEAR
5	10-90	BELL
6	SPARE	SPARE
7	0-10	SNUB

JCT. BOX ON BASE POLE

L	R	L	R
1		7	
2		8	
3		9	
4		10	
5		11	
6		12	

SHOW TYPE MECH. INSTALLED

ALL MECHANISMS SHOWN IN THE CLEAR POSITION

SAFETRAN S-60

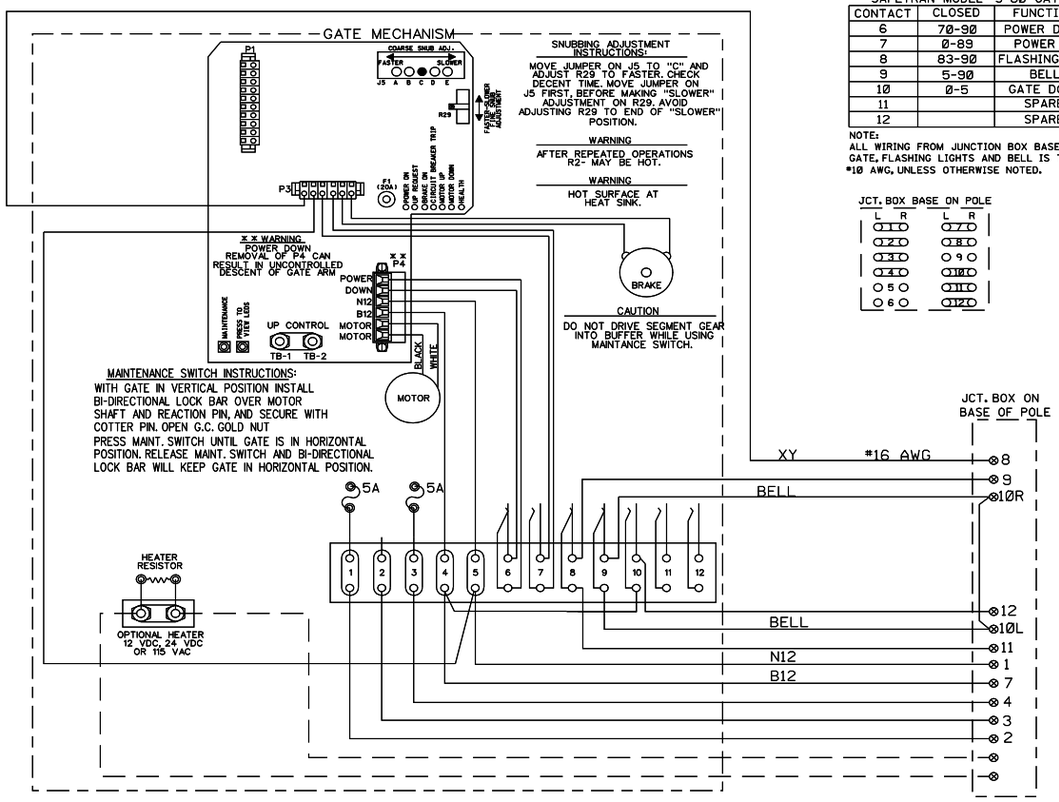

SAFETRAN MODEL "S-60" GATE

CONTACT	CLOSED	FUNCTION
6	70-90	POWER DOWN
7	0-89	POWER UP
8	83-90	FLASHING LGT.
9	5-90	BELL
10	0-5	GATE DOWN
11		SPARE
12		SPARE

NOTE:
ALL WIRING FROM JUNCTION BOX BASE TO GATE, FLASHING LIGHTS AND BELL IS TO BE #10 AWG, UNLESS OTHERWISE NOTED.

JCT. BOX BASE ON POLE

L	R	L	R
1		7	
2		8	
3		9	
4		10	
5		11	
6		12	

NEW SHEET

Designed: 05/05/14
INSTALL FLASHERS W/GATES & CWT, AT IL37/10TH ST. M.P. 124.23
Rec#: WO#: 24093
IS: /NBT
/ /SSS/JTB

MODIFICATION LEVEL	
Q. A. LAST LEVEL CHECKED	DU
LAST LEVEL MOD THIS TYPICAL	DU
LAST LEVEL BY DESIGNER	DU
CHANGED FROM TYPICAL?	N

REV 01.24.11 4K GWIRING.7

CIRCUIT MODIFICATIONS ARE NOT TO BE MADE WITHOUT AUTHORITY FROM THE OFFICE OF SIGNAL DESIGN

Date: 05/05/14
Des: SSS
Chk: NBT
AFE: 24093

UNION PACIFIC RAILROAD
MT. VERNON, ILLINOIS
ILLINOIS 37/10TH STREET
PINCKNEYVILLE SUBDIVISION
Office of AVP Engineering - Signal Omaha, Nebraska

Sh.: 6
DOT 167709G
MP: 124.23
ID: 127612423.6X

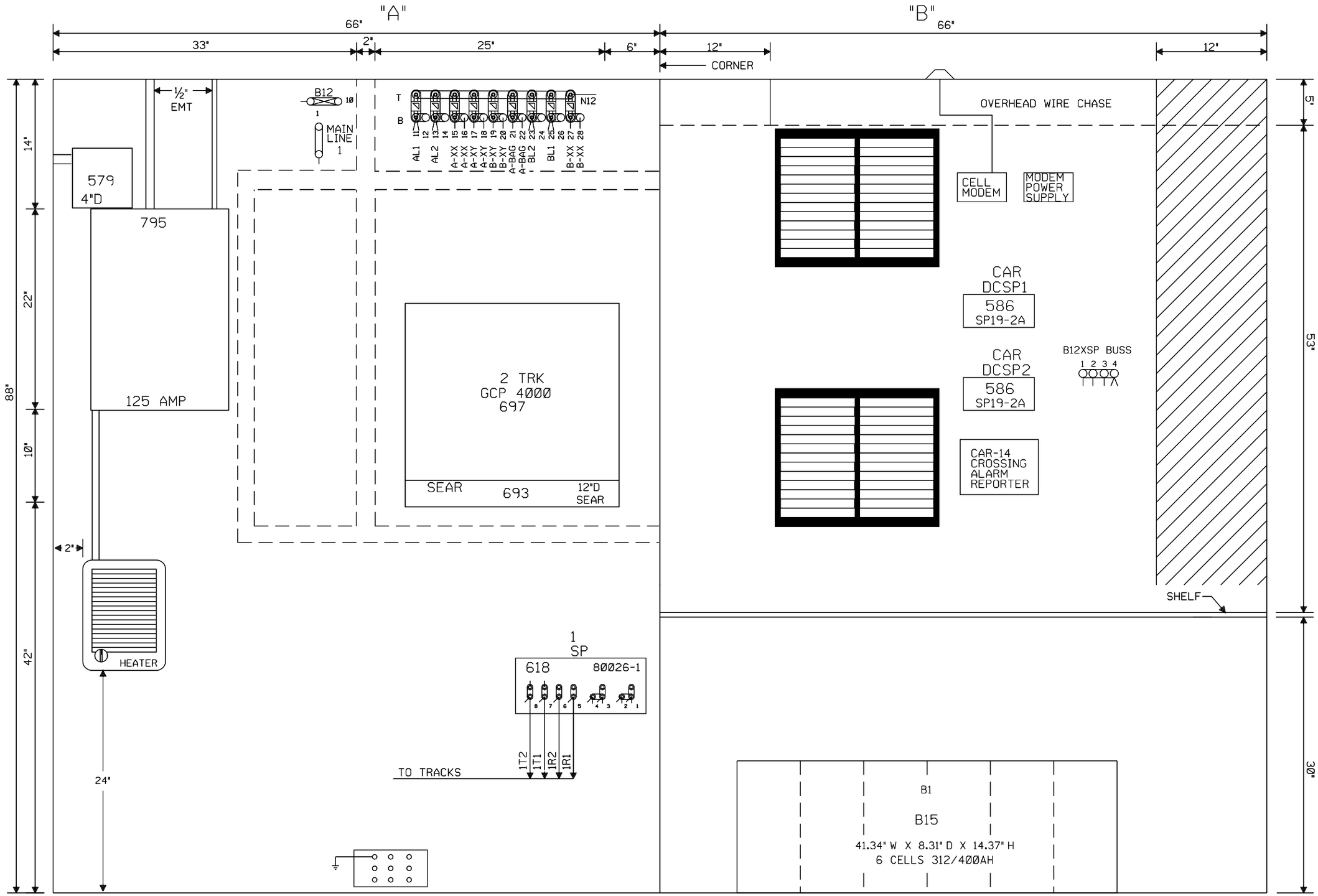

6X6 WAYSIDE/XING HOUSE WITH HEATER AND BLOWER U.P. PART#520-2529

NOTE: ALL DIMENSIONS SHOWN ARE APPROXIMATE.

NEW SHEET

Designed: 05/05/14
INSTALL FLASHERS W/GATES & CWT. AT IL37/10TH ST. M.P. 124.23
Rec#: WO#: 24093
IS: /NBT
/SSS/JTB

MODIFICATION LEVEL	
Q.A. LAST LEVEL CHECKED	DU
LAST LEVEL MOD THIS TYPICAL	DU
LAST LEVEL BY DESIGNER	DU
CHANGED FROM TYPICAL?	Y

REV 01.24.11 4K 4TKGFC.8

CIRCUIT MODIFICATIONS ARE NOT TO BE MADE WITHOUT AUTHORITY FROM THE OFFICE OF SIGNAL DESIGN

Date: 05/05/14
Des: SSS
Chk: NBT
AFE: 24093

UNION PACIFIC RAILROAD
MT. VERNON, ILLINOIS
ILLINOIS 37/10TH STREET
PINCKNEYVILLE SUBDIVISION
Office of AVP Engineering - Signal Omaha, Nebraska

Sh.: 7
DOT 167709G
MP: 124.23
ID: 127612423.7X

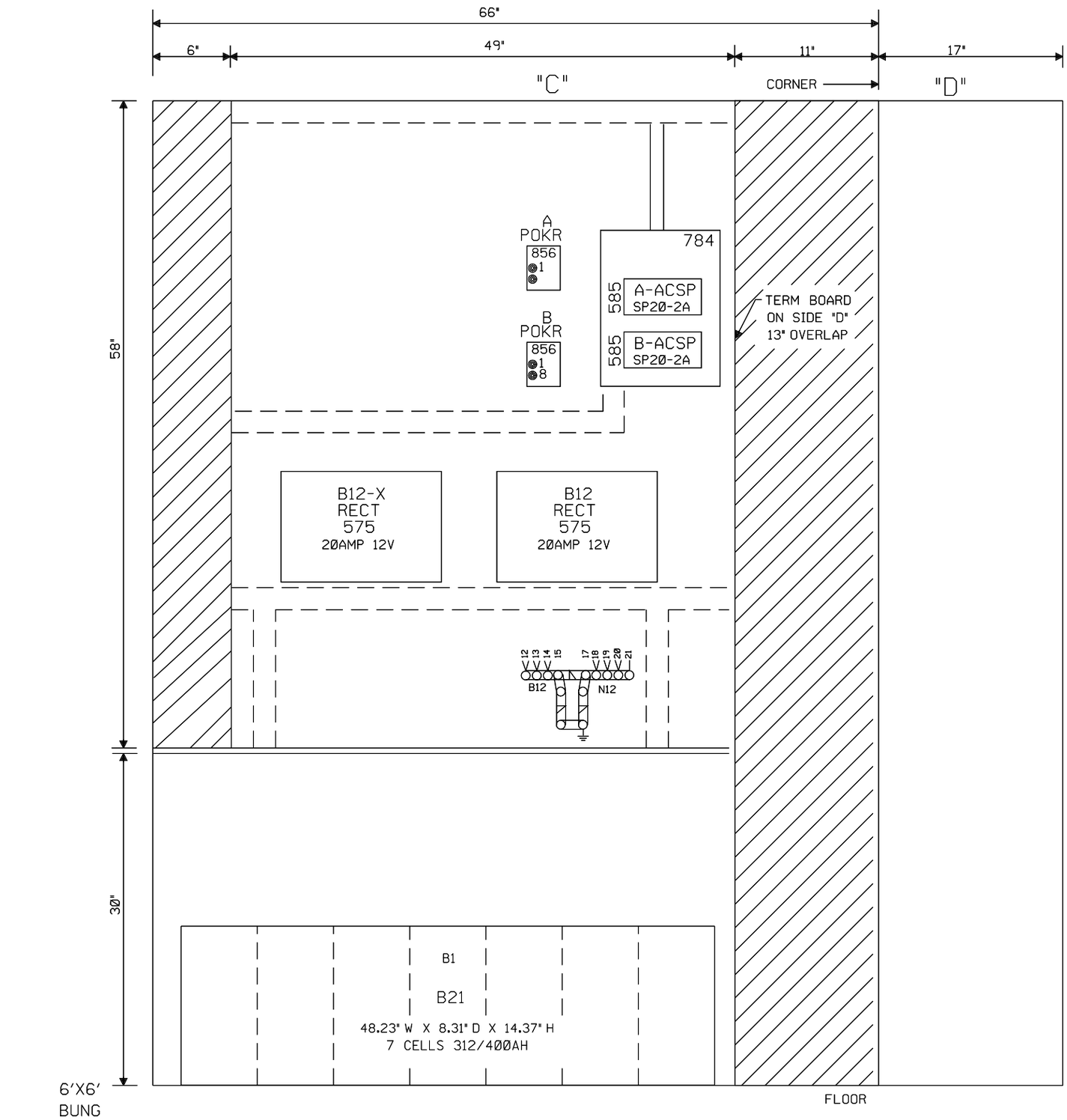

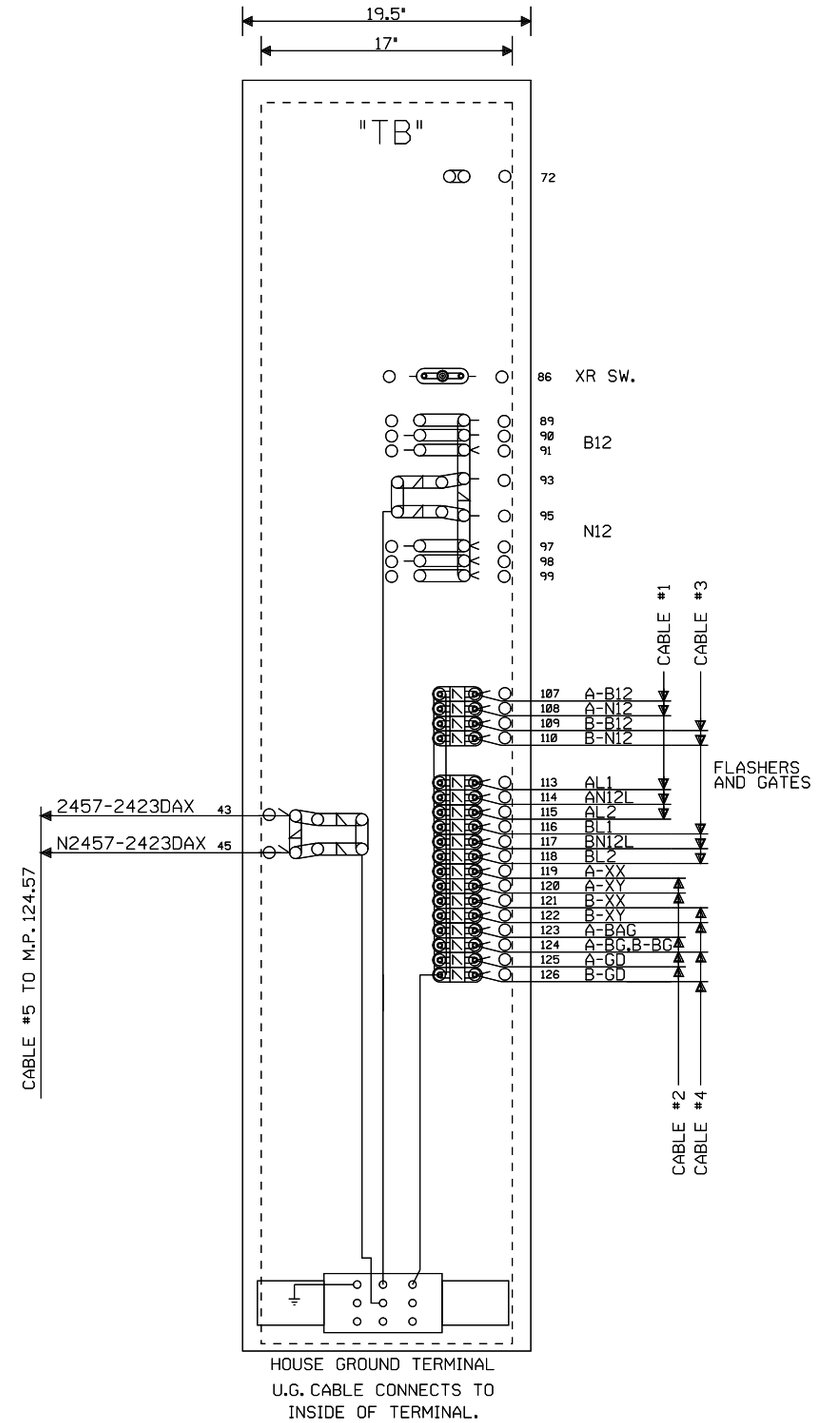

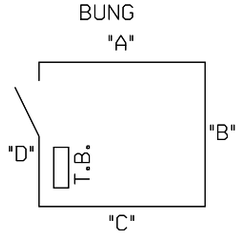

NOTE: NO TEST LINKS TO BE INSTALLED WITH CROSSING LIGHTING OR GATE MECH CIRCUITRY

NOTE: ALL DIMENSIONS SHOWN ARE APPROXIMATE.

NEW SHEET

Designed: 05/05/14

INSTALL FLASHERS W/GATES & CWT. AT IL37/10TH ST. M.P. 124.23

Rec#: WO#: 24093
IS: /NBT
/ /SSS/JTB

MODIFICATION LEVEL	
Q. A. LAST LEVEL CHECKED	DU
LAST LEVEL MOD THIS TYPICAL	DU
LAST LEVEL BY DESIGNER	DU
CHANGED FROM TYPICAL?	Y

REV 01.24.11 4K GFC.9

CIRCUIT MODIFICATIONS ARE NOT TO BE MADE WITHOUT AUTHORITY FROM THE OFFICE OF SIGNAL DESIGN

Date: 05/05/14
Des: SSS
Chk: NBT
AFE: 24093

UNION PACIFIC RAILROAD

MT. VERNON, ILLINOIS
ILLINOIS 37/10TH STREET
PINCKNEYVILLE SUBDIVISION

Office of AVP Engineering - Signal Omaha, Nebraska

Sh.: 8
DOT 167709G
MP: 124.23
ID: 127612423.8X

Minimum Program Steps Report

Location and SIN

DOT Number: 167709G
Milepost Number: 124.23
Site Name: MOUNT VERNON, IL

SIN: 762010010016 *

* Parameter is part of office check number calculation.

MCF and Template Selection

MCF Name: GCP-T6X-02-4.mcf
MCF Revision: 24
MCFCRC: 09FC363B

Template = 1A:6 Trk Bi (OCCN) *

* Parameter is part of office check number calculation.

Minimum Program Steps

TEMPLATE: track 1-Bi, Island
Track 1 : GCP Frequency = 430 Hz (Field,TCN)
Track 1 : Approach Distance = 2157 ft (Set in Field,TCN)
Track 1 : Prime Warning Time = 25 sec (OCCN) *
Track 1 : Prime UAX = IP (OCCN) *
Track 1 : Prime UAX Pickup = 15 sec (OCCN) *
Track 1 : GCP Transmit Level = Medium (Set in Field,TCN)
Track 1 : Isl Frequency = 10.0 kHz (Set in Field)

TEMPLATE: AND 1 XR
AND 1 Enable Used = Yes (OCCN) *

TEMPLATE: SSCC
SSCC 1 : Lamp Neutral Test = Off (Set in Field)
SSCC 2 : Lamp Neutral Test = Off (Set in Field)

TEMPLATE: OOS
OOS Control = OOS IPs (OCCN) *

TEMPLATE: IP assignment 1
IN 1.1 = T1 Prime UAX (OCCN) *
IN 1.2 = Out Of Service IP 1 (OCCN) *

TEMPLATE: IP assignment SSCC
IN 7.1 = AND 1 XR Enable (OCCN) *

GCP: track 1
Track 1 : Island Distance = 136 ft (Set in Field,TCN)

ISLAND: track 1
Track 1 : Pickup Delay (2s +) = 2 sec (OCCN) *

ADVANCED: site options
Daylight Savings = Off (Set in Field)

* Parameter is part of office check number calculation.

Check Numbers

Office Check Number: 6BE5E952
Config. Check Number: 5418B421
(Based on MCF Revision 24)

Parameters not part of office check number calculation:

Track 1 : GCP Frequency = 430 Hz
Track 1 : Approach Distance = 2157 ft (Set in Field)
Track 1 : GCP Transmit Level = Medium (Set in Field)
Track 1 : Isl Frequency = 10.0 kHz
SSCC 1 : Lamp Neutral Test = Off (Set in Field)
SSCC 2 : Lamp Neutral Test = Off (Set in Field)
Track 1 : Island Distance = 136 ft (Set in Field)
Daylight Savings = Off (Set in Field)

Comments

<none>

Configuration Package File

Filename: 127612423_167709G.pac
Path: U:\UP_Projects\24093_Mt VernonIL_IL37_10thSt\Locations\124.23 IL37_10thSt ALL NEW\program\
Date/Time: 8/07/2014 6:25:42

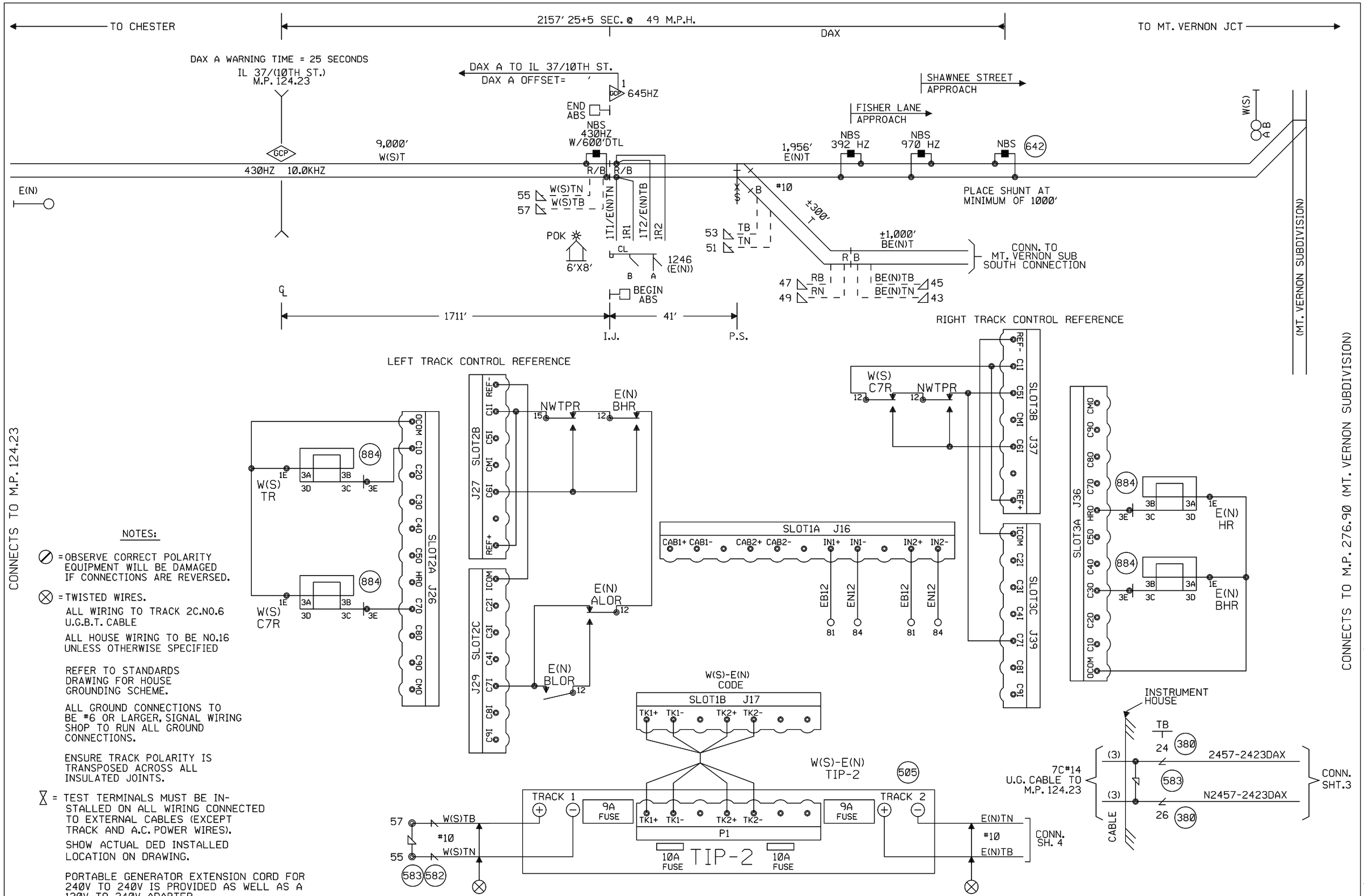

NOTES:

⊘ = OBSERVE CORRECT POLARITY EQUIPMENT WILL BE DAMAGED IF CONNECTIONS ARE REVERSED.

⊗ = TWISTED WIRES.

ALL WIRING TO TRACK 2C.NO.6 U.G.B.T. CABLE

ALL HOUSE WIRING TO BE NO.16 UNLESS OTHERWISE SPECIFIED

REFER TO STANDARDS DRAWING FOR HOUSE GROUNDING SCHEME.

ALL GROUND CONNECTIONS TO BE #6 OR LARGER, SIGNAL WIRING SHOP TO RUN ALL GROUND CONNECTIONS.

ENSURE TRACK POLARITY IS TRANSPOSED ACROSS ALL INSULATED JOINTS.

⧖ = TEST TERMINALS MUST BE INSTALLED ON ALL WIRING CONNECTED TO EXTERNAL CABLES (EXCEPT TRACK AND A.C. POWER WIRES).

SHOW ACTUAL DED INSTALLED LOCATION ON DRAWING.

PORTABLE GENERATOR EXTENSION CORD FOR 240V TO 240V IS PROVIDED AS WELL AS A 120V TO 240V ADAPTER.

TRANSMITTER AND RECEIVER LEADS TO BE SEPARATED BY AT LEAST 12" IN TRENCH, LENGTHS SHOULD NOT EXCEED MANUFACTURES RECOMMENDATION.

OFFSET AND ISLAND DISTANCES TO BE VERIFIED BY FIELD

W(S) ←—○—→ E(N)

CABLE TABULATION

CABLE NO. 1 5C#6 HSE TO SIGNAL E(N)A/B
CABLE NO. 2 7C#14 HSE TO SW. JCT. BOX
CABLE NO. 3 7C#14 U.G.B.T. HOUSE TO M.P. 124.23

CONSTRUCTION NOTES:

1. INSTALL REMOTE HOUSE AT M.P. 124.57. SHOP TO WIRE FOR AND FIELD TO TRANSFER EC5 AND TIP PANEL WAYSIDE EQUIPMENT TO NEW HOUSE.
2. ORDER AND INSTALL VPM-3 IN EC5 BOX.
3. REUSE EXISTING SIGNALS AND FOUNDATIONS AT THIS LOCATION.

NEW SHEET

Designed: 05/05/14 INSTALL FLASHERS W/GATES & CWT, AT IL37/10TH ST. M.P. 124.23 Rec#: WO#: 24093 IS: /JPW / /SSS/JTB	MODIFICATION LEVEL		CIRCUIT MODIFICATIONS ARE NOT TO BE MADE WITHOUT AUTHORITY FROM THE OFFICE OF SIGNAL DESIGN	Date: 05/05/14 Des: SSS Chk: JPW AFE: 24093	UNION PACIFIC RAILROAD ONE TRACK INTERMEDIATE PINCKNEYVILLE SUBDIVISION Office of AVP Engineering - Signal Omaha, Nebraska	Sh.: 1 MP: 124.57 ID: 127612457.1S
	Q. A. LAST LEVEL CHECKED	DU				
	LAST LEVEL MOD THIS TYPICAL	DU				
	LAST LEVEL BY DESIGNER	DU				
	CHANGED FROM TYPICAL?	Y				
	REV 10/3/13 1TEC5INT.1S.DGN					

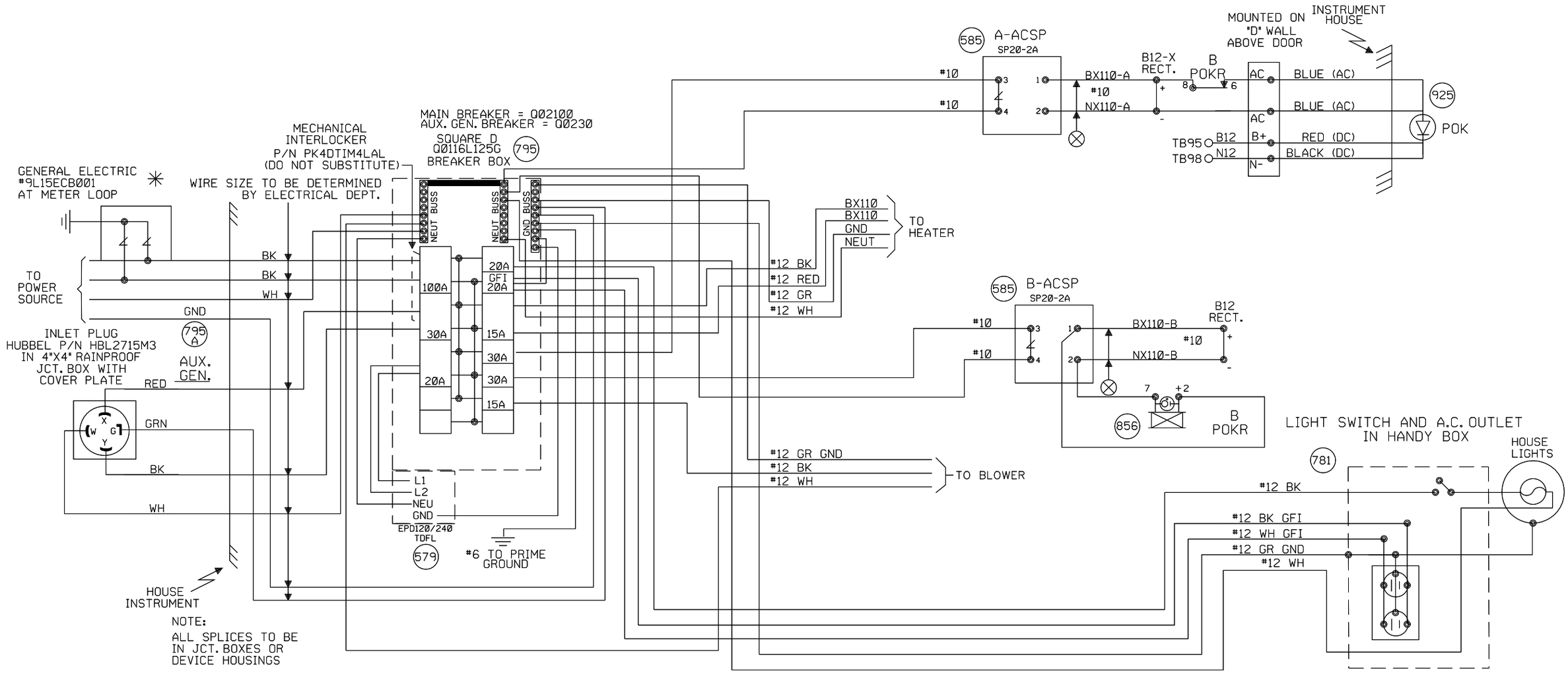

NEW SHEET

					Designed: 05/05/14 INSTALL FLASHERS W/GATES & CWT, AT IL37/10TH ST. M.P. 124.23 Rec#: WO#: 24093 IS: /NBT / /SSS/JTB	MODIFICATION LEVEL Q.A. LAST LEVEL CHECKED DU LAST LEVEL MOD THIS TYPICAL DU LAST LEVEL BY DESIGNER DU CHANGED FROM TYPICAL? Y REV 01.24.11 4K SEARAC.2	CIRCUIT MODIFICATIONS ARE NOT TO BE MADE WITHOUT AUTHORITY FROM THE OFFICE OF SIGNAL DESIGN	Date: 05/05/14 Des: SSS Chk: NBT AFE: 24093	UNION PACIFIC RAILROAD ONE TRACK INTERMEDIATE PINCKNEYVILLE SUBDIVISION Office of AVP Engineering - Signal Omaha, Nebraska	Sh.: 2 MP: 124.57 ID: 127612457.2X

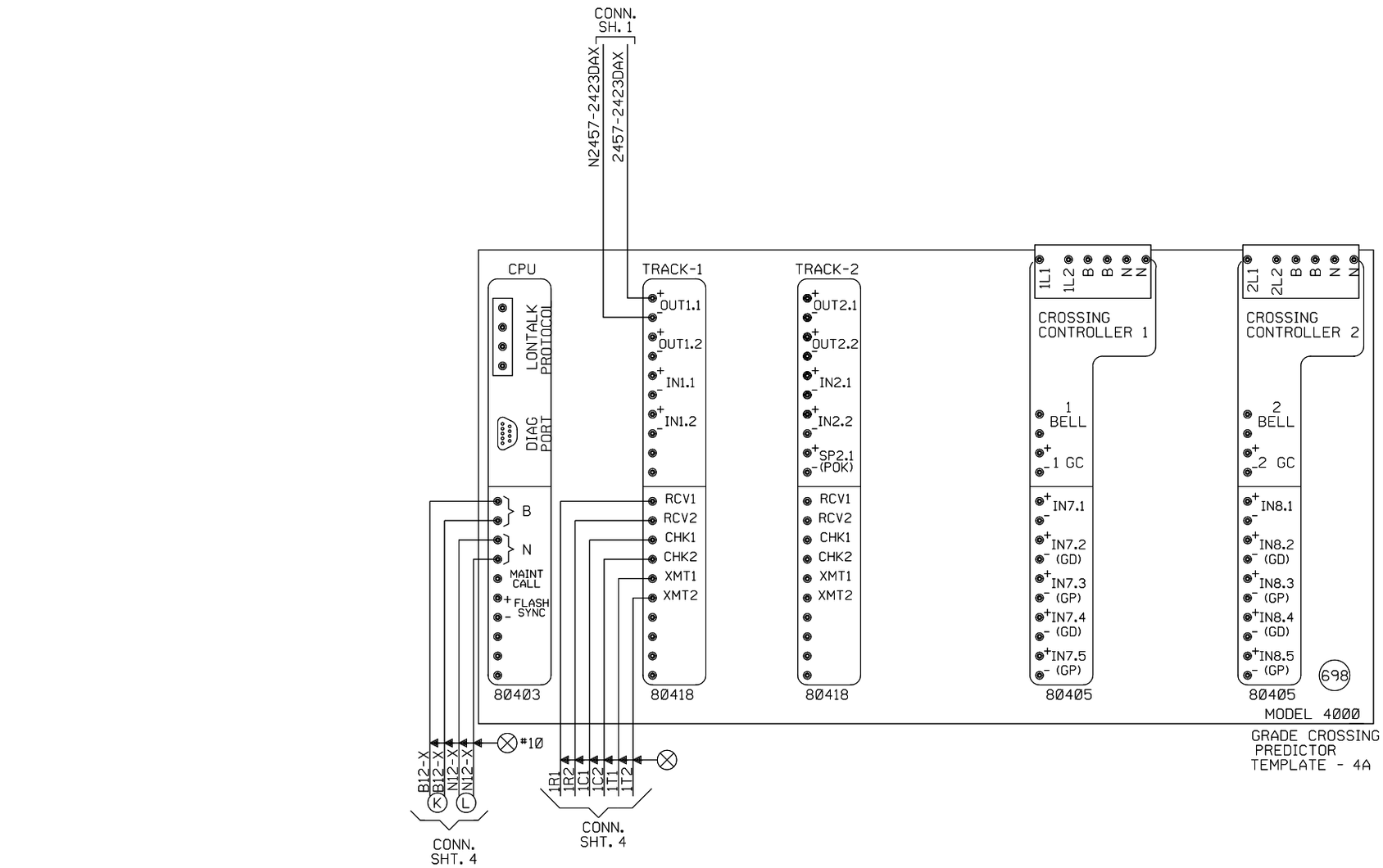

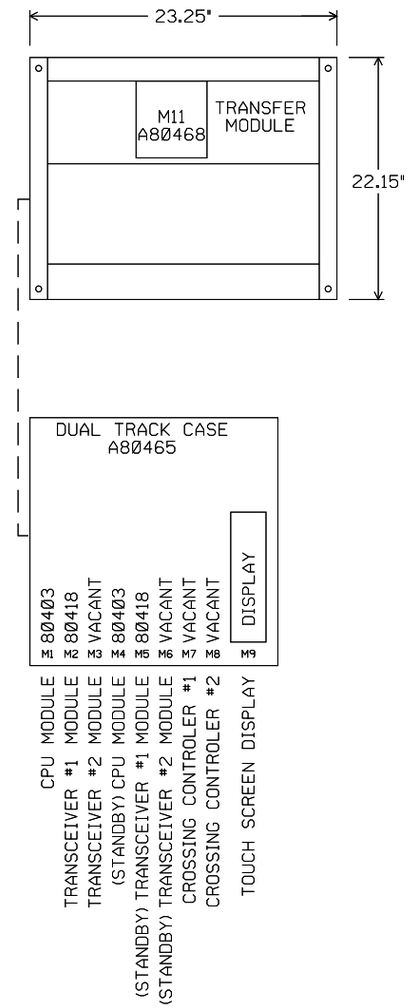

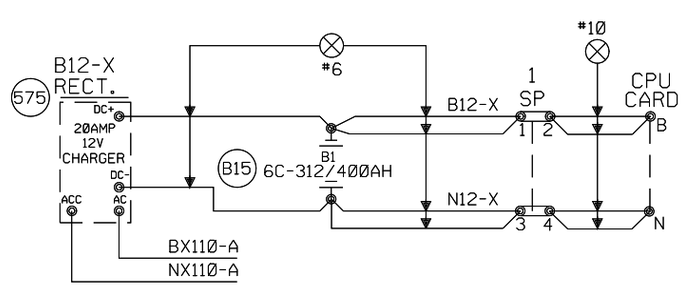

"Mf" FREQUENCY (HZ)	MAXIMUM TRANSMIT WIRE LENGTH (FEET)
86	100
114	125
156	150
211	200
285-970	250

NOTE:
EACH TRANSMITTER TO RAIL WIRE FROM XMT1 AND XMT2 MUST NOT EXCEED THE MAXIMUM LENGTH SPECIFIED IN THE TABLE SHOWN. THE RECEIVER WIRE LENGTH IS NOT CRITICAL. DOES NOT APPLY TO 6 TRACK WIRE APPLICATION.

NEW SHEET

Designed: 05/05/14
INSTALL FLASHERS W/GATES & CWT, AT IL37/10TH ST. M.P. 124.23
Rec#: WO#: 24093
IS: /NBT
/ /SSS/JTB

MODIFICATION LEVEL	
Q. A. LAST LEVEL CHECKED	DU
LAST LEVEL MOD THIS TYPICAL	DU
LAST LEVEL BY DESIGNER	DU
CHANGED FROM TYPICAL?	Y

rev 01.24.11 4K 2TKGF.3

CIRCUIT MODIFICATIONS ARE NOT TO BE MADE WITHOUT AUTHORITY FROM THE OFFICE OF SIGNAL DESIGN

Date: 05/05/14
Des: SSS
Chk: NBT
AFE: 24093

UNION PACIFIC RAILROAD

ONE TRACK INTERMEDIATE
PINCKNEYVILLE SUBDIVISION

Office of AVP Engineering - Signal Omaha, Nebraska

Sh.: 3
MP: 124.57
ID: 127612457.3X

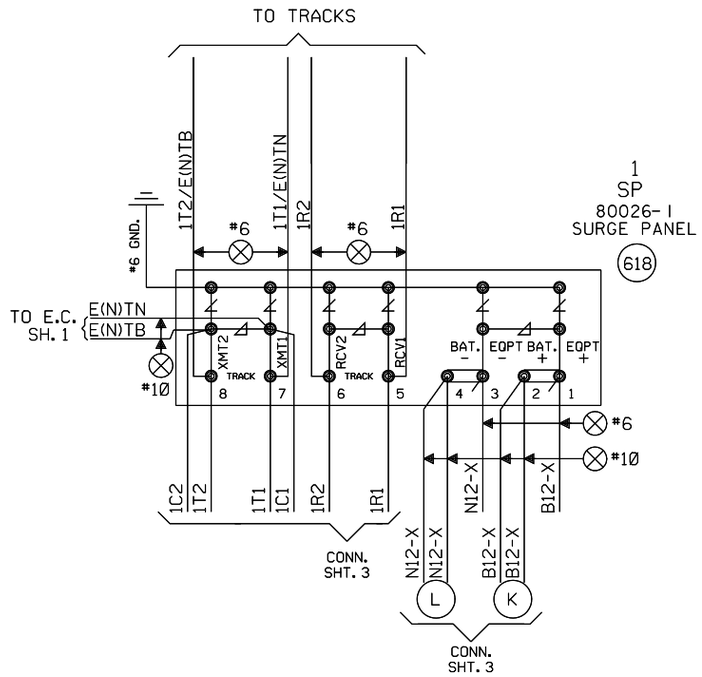

NEW SHEET

					Designed: 05/05/14 INSTALL FLASHERS W/GATES & CWT, AT IL37/10TH ST. M.P. 124.23 Rec#: WO#: 24093 IS: /NBT / /SSS/JTB	MODIFICATION LEVEL Q.A. LAST LEVEL CHECKED DU LAST LEVEL MOD THIS TYPICAL DU LAST LEVEL BY DESIGNER DU CHANGED FROM TYPICAL? Y REV 01.24.11 4K REMOTE.4	CIRCUIT MODIFICATIONS ARE NOT TO BE MADE WITHOUT AUTHORITY FROM THE OFFICE OF SIGNAL DESIGN	Date: 05/05/14 Des: SSS Chk: NBT AFE: 24093	UNION PACIFIC RAILROAD ONE TRACK INTERMEDIATE PINCKNEYVILLE SUBDIVISION Office of AVP Engineering - Signal Omaha, Nebraska	Sh.: 4 MP: 124.57 ID: 127612457.4X

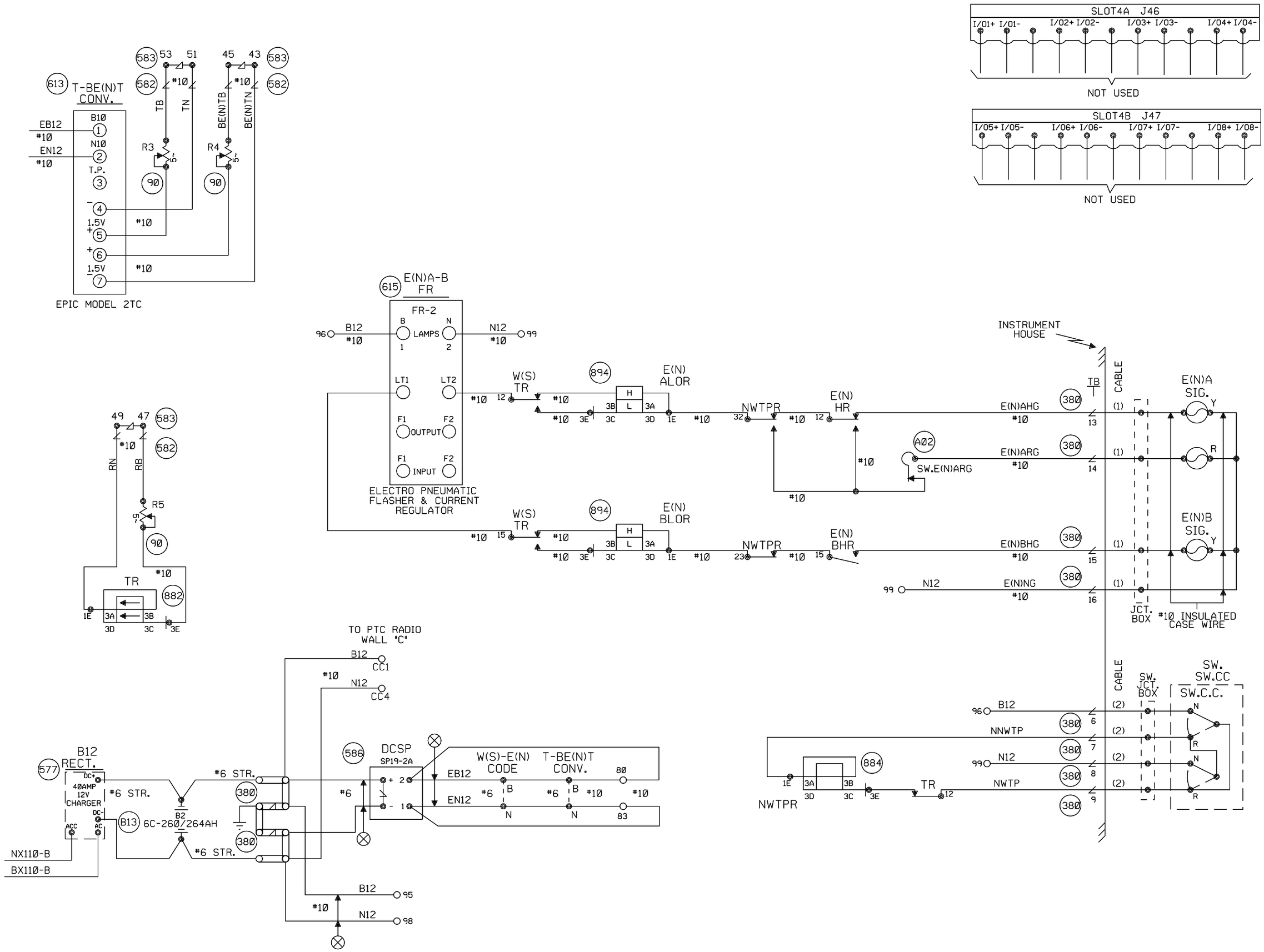

NEW SHEET

							Designed: 05/05/14 INSTALL FLASHERS W/GATES & CWT. AT IL37/10TH ST. M.P. 124.23 Rec#: WO#: 24093 IS: /NBT / /SSS/JTB	CIRCUIT MODIFICATIONS ARE NOT TO BE MADE WITHOUT AUTHORITY FROM THE OFFICE OF SIGNAL DESIGN	Date: 05/05/14 Des: SSS Chk: NBT AFE: 24093	UNION PACIFIC RAILROAD ONE TRACK INTERMEDIATE PINCKNEYVILLE SUBDIVISION Office of AVP Engineering - Signal Omaha, Nebraska	Sh.: 5 MP: 124.57 ID: 127612457.5S

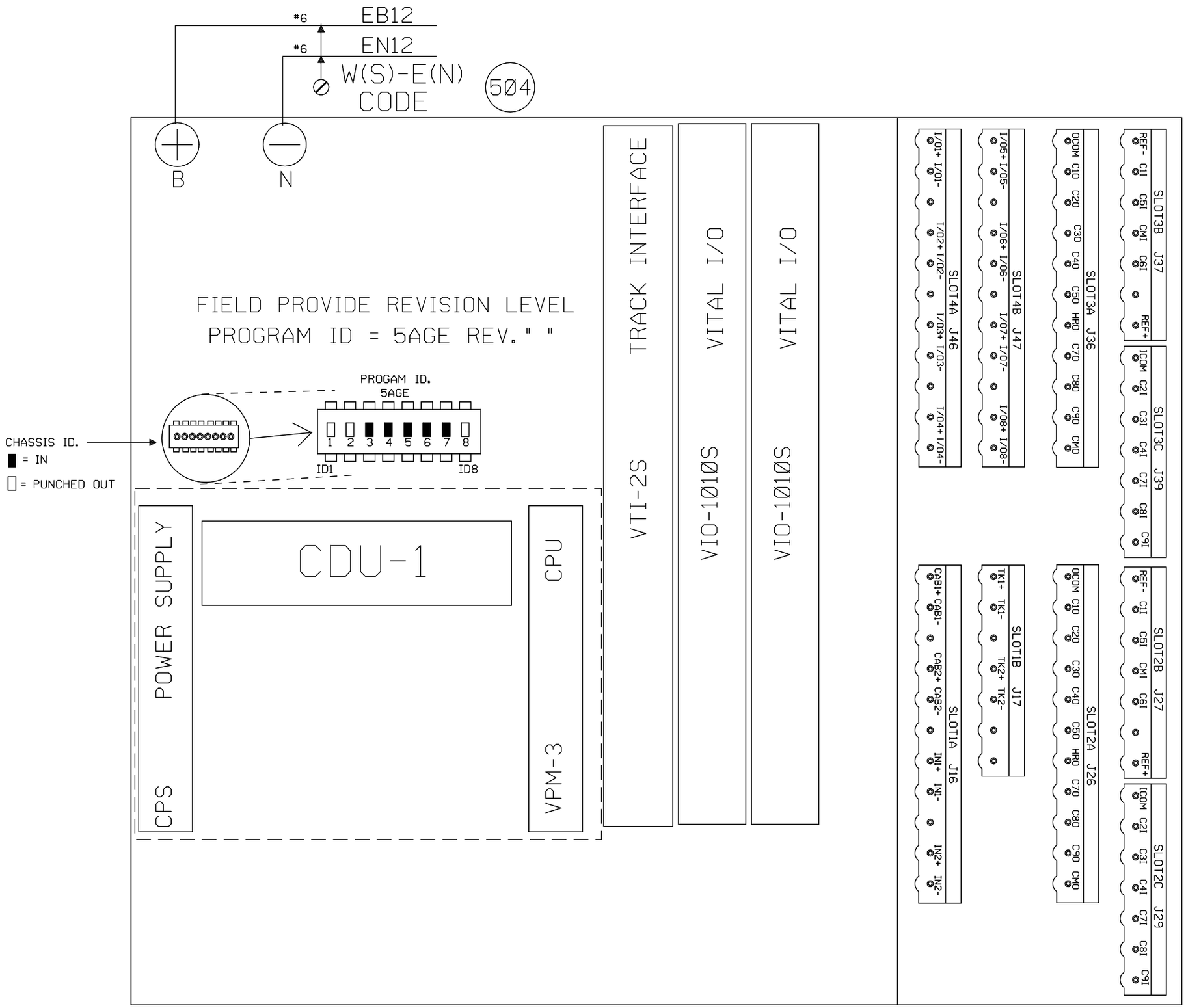

VITAL
CONFIGURATION SETTINGS

LC5	FALSE	L ALT-5	FALSE
RC5	FALSE	R ALT-5	FALSE
LCM	FALSE		
RCM	FALSE		

NEW SHEET

Designed: 05/05/14

INSTALL FLASHERS W/GATES & CWT, AT IL37/10TH ST. M.P. 124.23

Rec#: WO#: 24093
IS: /NBT
/ /SSS/JTB

MODIFICATION LEVEL	
Q. A. LAST LEVEL CHECKED	DU
LAST LEVEL MOD THIS TYPICAL	DU
LAST LEVEL BY DESIGNER	DU
CHANGED FROM TYPICAL?	Y

REV 10/3/13 1TEC5INT.3S.DGN

CIRCUIT MODIFICATIONS ARE NOT TO BE MADE WITHOUT AUTHORITY FROM THE OFFICE OF SIGNAL DESIGN

Date: 05/05/14
Des: SSS
Chk: NBT
AFE: 24093

UNION PACIFIC RAILROAD

ONE TRACK INTERMEDIATE
PINCKNEYVILLE SUBDIVISION

Office of AVP Engineering - Signal Omaha, Nebraska

Sh.: 6
MP: 124.57
ID: 127612457.6S

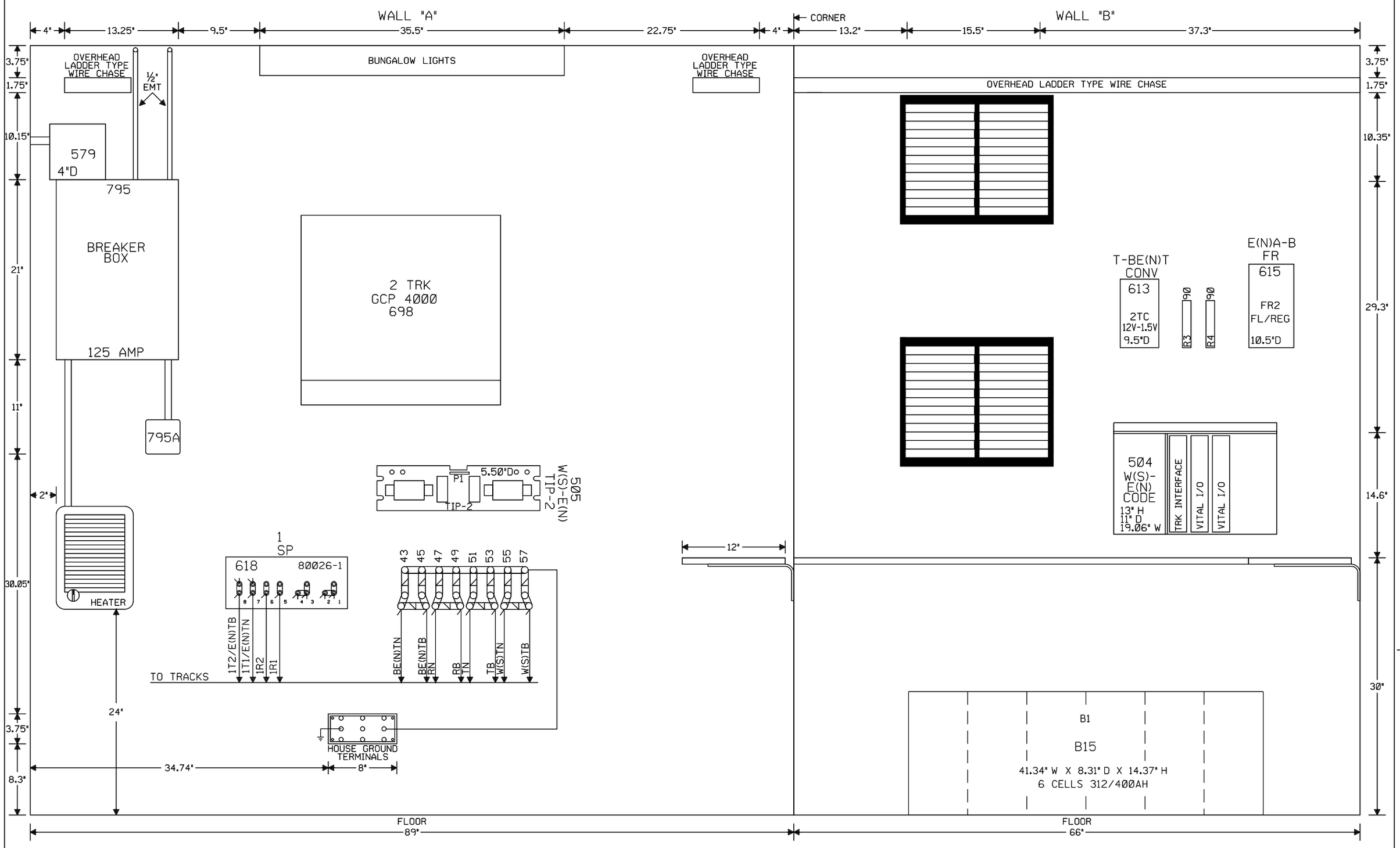

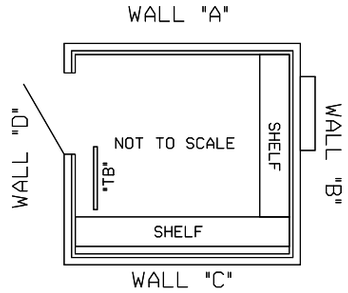

6X8 XING HOUSE WITH HEATER AND BLOWER U.P. PART#520-2531

NOTE: ALL DIMENSIONS SHOWN ARE APPROXIMATE.

NEW SHEET

Designed: 01/28/14

INSTALL FLASHERS W/GATES & CWT AT IL 37/10TH ST. M.P. 124.23

Rec#: WO#: 24093 /NBT

IS: / /SSS/JTB

CIRCUIT MODIFICATIONS ARE NOT TO BE MADE WITHOUT AUTHORITY FROM THE OFFICE OF SIGNAL DESIGN

Date:	05/05/14
Des:	SSS
Chk:	NBT
AFE:	24093

UNION PACIFIC RAILROAD

ONE TRACK INTERMEDIATE
PINCKNEYVILLE SUBDIVISION

Office of AVP Engineering - Signal — Omaha, Nebraska

Sh.: 7

MP: 124.57

ID: 127612457.7X

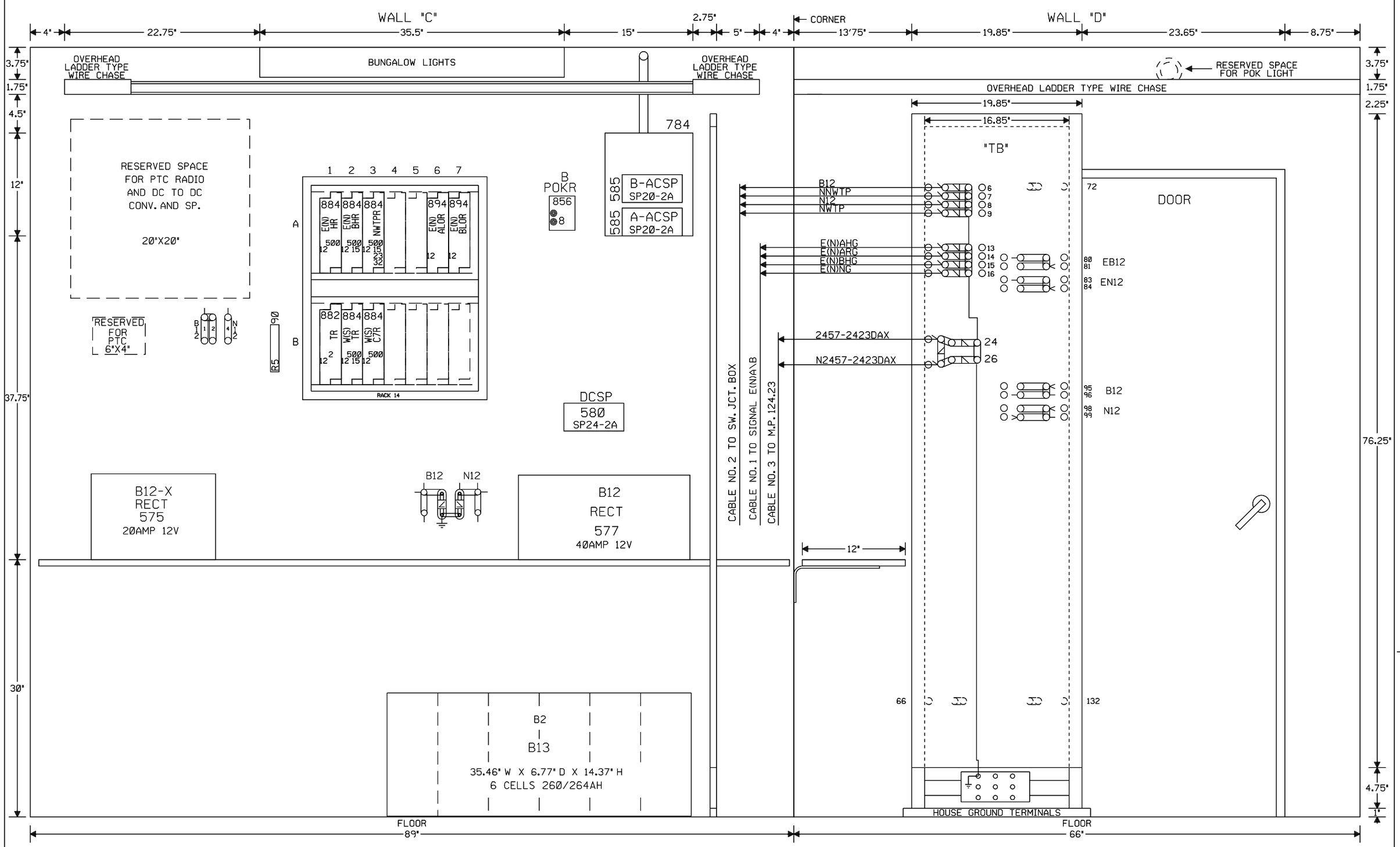

NEW SHEET

							Designed: 01/28/14 INSTALL FLASHERS W/GATES & CWT AT IL 37/10TH ST. M.P. 124.23 Rec#: WO#: 24093 IS: /NBT / /SSS/JTB	CIRCUIT MODIFICATIONS ARE NOT TO BE MADE WITHOUT AUTHORITY FROM THE OFFICE OF SIGNAL DESIGN	Date: 05/05/14 Des: SSS Chk: NBT AFE: 24093

UNION PACIFIC RAILROAD

ONE TRACK INTERMEDIATE
PINCKNEYVILLE SUBDIVISION

Office of AVP Engineering - Signal Omaha, Nebraska

Sh.: 8
MP: 124.57
ID: 127612457.8X

Minimum Program Steps Report

Location and SIN

DOT Number: 000000R
Milepost Number: 124.57
Site Name: MOUNT VERNON, IL

SIN: 762010010016 *

* Parameter is part of office check number calculation.

MCF and Template Selection

MCF Name: GCP-T6X-02-4.mcf
MCF Revision: 24
MCFCRC: 09FC363B

Template = 4A:6 Remotes (OCCN) *

* Parameter is part of office check number calculation.

Minimum Program Steps

TEMPLATE: track 1-Remote Dax
Track 1 : GCP Frequency = 645 Hz (Field,TCN)
Track 1 : Approach Distance = 1000 ft (Set in Field,TCN)
Track 1 : Dax A Warning Time = 25 sec (OCCN) *
Track 1 : Dax A Offset Distance = 1643 ft (Set in Field)
Track 1 : GCP Transmit Level = Medium (Set in Field,TCN)

TEMPLATE: track Anding
AND 1 XR Used = No (OCCN) *

TEMPLATE: OOS
OOS Timeout = 1 hrs (Set in Field)

TEMPLATE: OP assignment 1
OUT 1.1 = T1 Dax A (OCCN) *

ADVANCED: site options
Daylight Savings = Off (Set in Field)

* Parameter is part of office check number calculation.

Check Numbers

Office Check Number: 180B9F78
Config. Check Number: 2F39F837
(Based on MCF Revision 24)

Parameters not part of office check number calculation:

Track 1 : GCP Frequency = 645 Hz
Track 1 : Approach Distance = 1000 ft (Set in Field)
Track 1 : Dax A Offset Distance = 1643 ft (Set in Field)
Track 1 : GCP Transmit Level = Medium (Set in Field)
OOS Timeout = 1 hrs (Set in Field)
Daylight Savings = Off (Set in Field)

Comments

<none>

Configuration Package File

Filename: 127612457_000000R.pac
Path: U:\UP_Projects\24093_Mt VernonIL_IL37_10thSt\Locations\124.57 Remote_Int Sig ALL NEW\Program\
Date/Time: 8/07/2014 6:35:35

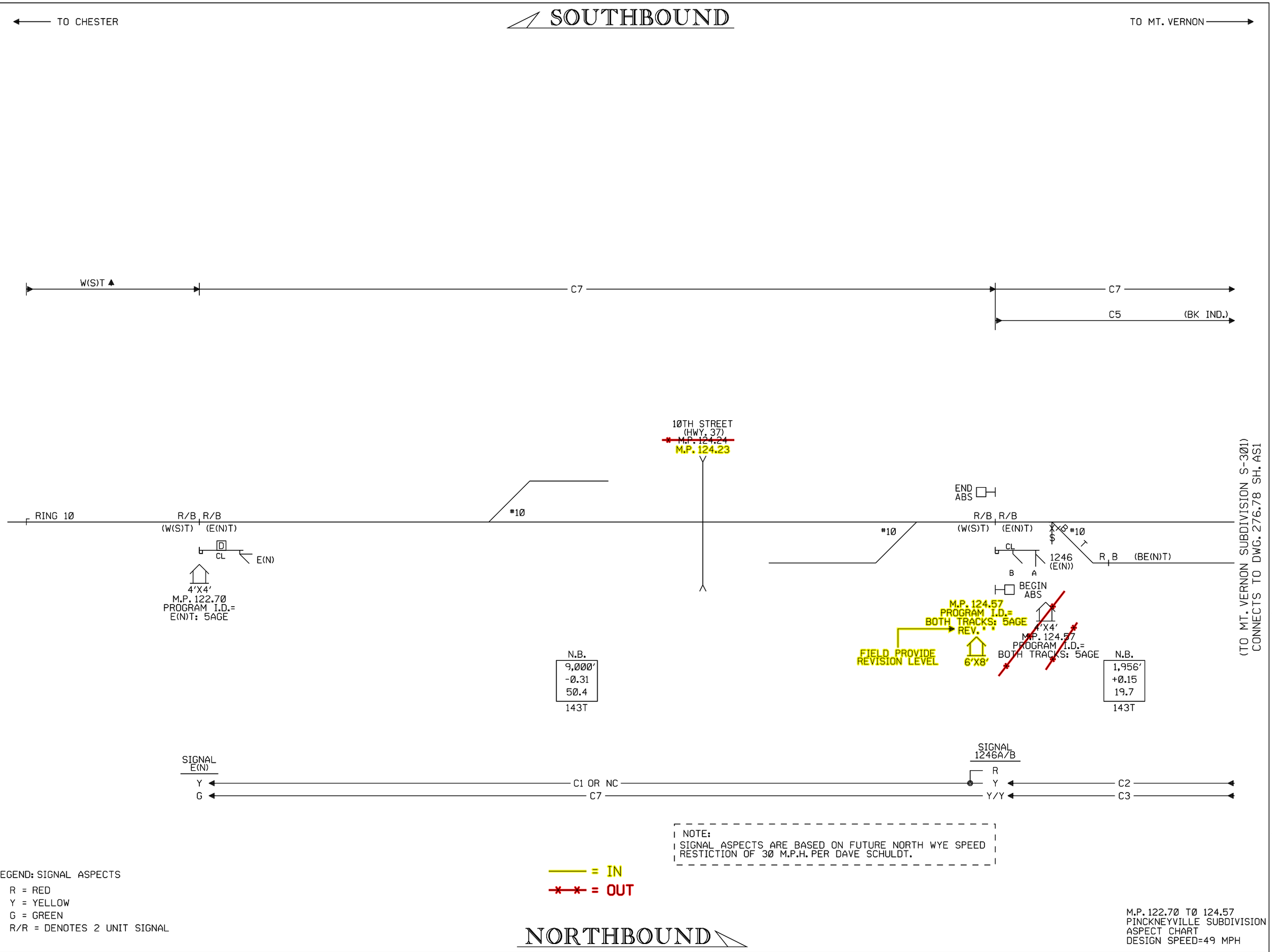

Designed: 05/05/14
INSTALL FLASHERS W/GATES & CWT. AT IL37/10TH ST. M.P. 124.23
Rec#:
IS:
WO#: 24093 /JPW /SSS/JTB

REV. 11-7-06
INSTALLED INTERCONNECTION BETWEEN MT. VERNON SUB. AND PINCKNEYVILLE SUB. M.P. 276.78.
W.O. #53434
REC. #13891
3-28-06 MWK
JEH/WITT/CTC/GWS

CIRCUIT MODIFICATIONS ARE NOT TO BE MADE WITHOUT AUTHORITY FROM THE OFFICE OF SIGNAL DESIGN

DES: CTC
DIG: CTC
CHK: RLL/MWK
A.F.E. 53434
ID= 127612457.AS1

UNION PACIFIC RAILROAD
MT. VERNON, ILLINOIS TO
CHESTER, ILLINOIS
A.B.S. CIRCUITS
OFFICE OF AVP ENGINEERING-DESIGN OMAHA NEBR.

DATE 5-18-05
SHEET AS1
DWG 124.57
S-1276

TO GATEWAY YARD

TO MITCHELL

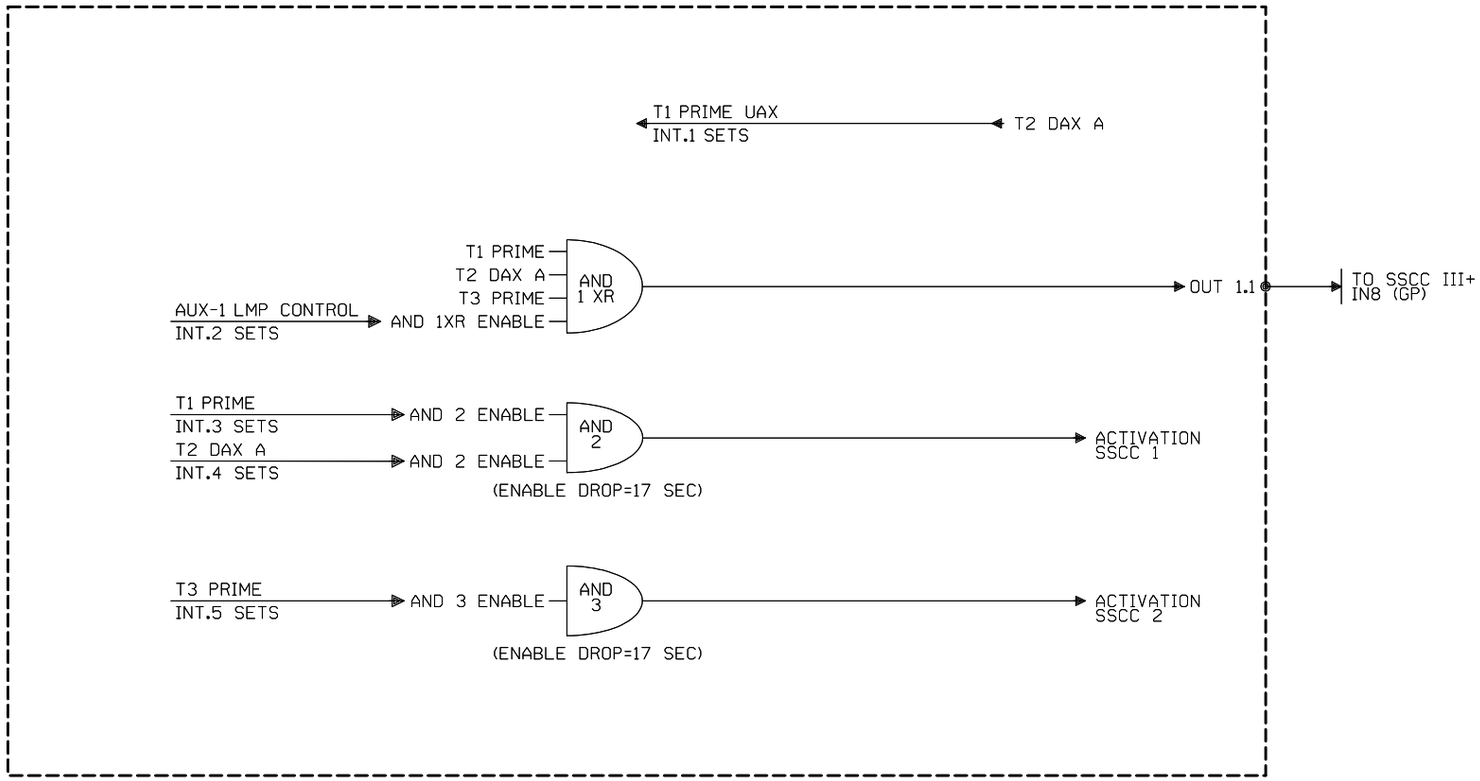

W(S) ← → E(N)

ALTON & SOUTHERN GATEWAY SUBDIVISION:
M.P.: 16.09
DOT: 846963J
GRANITE CITY INDUSTRIAL LEAD:
M.P.: 13.79
DOT: 175260C

NEW SHEET

Designed: 10/29/12
REUSE EXISTING 6'X6' BUNGALOW, CANT/FLS & INSTALL CONSTANT WARNING AT IL 162 M.P. 16.09 & M.P. 13.79
Rec#: WO#: 12881
IS: /JPW
/ /PRS/JTB

CIRCUIT MODIFICATIONS ARE NOT TO BE MADE WITHOUT AUTHORITY FROM THE OFFICE OF SIGNAL DESIGN

Date:	10/29/12
Des:	PRS
Chk:	JPW
AFE:	12881

UNION PACIFIC RAILROAD

DAX CHART
GRANITE CITY, ILLINOIS
SEE NOTE FOR SUBDIVISIONS

Office of Sr AVP Engineering - Signal/TCO Omaha, Nebraska

Sh.:	DAX
From M.P.	16.09
To MP:	16.09
ID:	32021609.DAX

(REV. 01.01.05) (4KDAXLAYOUT)

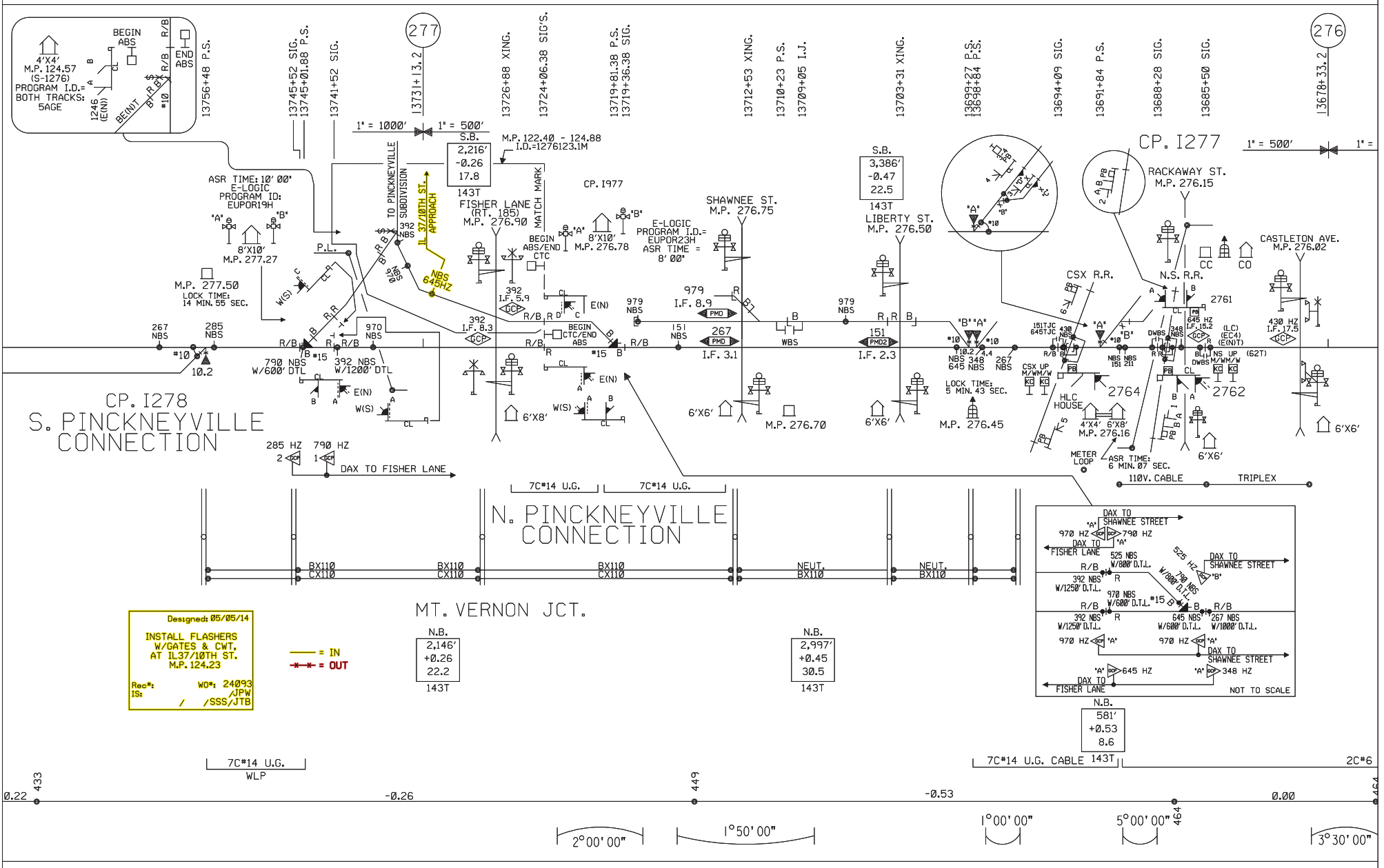
CP. I278
S. PINCKNEYVILLE CONNECTION
N. PINCKNEYVILLE CONNECTION
MT. VERNON JCT.
CP. I277
CP. I977
277
276
4'X4' M.P. 124.57 (S-1276) PROGRAM I.D.= BOTH TRACKS: 5AGE
BEGIN ABS
END ABS
1376+48 P.S.
13745+52 SIG.
13745+01.88 P.S.
13741+52 SIG.
13731+13.2
13726+88 XING.
13724+06.38 SIG'S.
13719+81.38 P.S.
13719+36.38 SIG.
13712+53 XING.
13710+23 P.S.
13709+05 I.J.
13703+31 XING.
13699+27 P.S.
13698+84 P.S.
13694+09 SIG.
13691+84 P.S.
13688+28 SIG.
13685+50 SIG.
13678+33.2
1" = 1000'
1" = 500'
S.B. 2,216' -0.26 17.8 143T
M.P. 122.40 - 124.88
I.D.=1276123.1M
S.B. 3,386' -0.47 22.5 143T
ASR TIME: 10' 00"
E-LOGIC PROGRAM ID: EUPOR19H
TO PINCKNEYVILLE SUBDIVISION
IL 37/10TH ST. APPROACH
NBS 645HZ
FISHER LANE (RT. 185) M.P. 276.90
MATCH MARK
BEGIN ABS/END CTC
8'X10' M.P. 277.27
M.P. 277.50
LOCK TIME: 14 MIN. 55 SEC.
E-LOGIC PROGRAM I.D.= EUPOR23H ASR TIME = 8' 00"
SHAWNEE ST. M.P. 276.75
LIBERTY ST. M.P. 276.50
RACKAWAY ST. M.P. 276.15
CASTLETON AVE. M.P. 276.02
CSX R.R.
N.S. R.R.
BEGIN CTC/END ABS
LOCK TIME: 5 MIN. 43 SEC.
HLC HOUSE
METER LOOP
ASR TIME: 6 MIN. 07 SEC.
M.P. 276.70
M.P. 276.45
M.P. 276.16
DAX TO FISHER LANE
110V. CABLE
TRIPLEX
7C#14 U.G.
BX110 CX110
NEUT. BX110
DAX TO SHAWNEE STREET
NOT TO SCALE
Designed: 05/05/14
INSTALL FLASHERS W/GATES & CWT, AT IL37/10TH ST. M.P. 124.23
Rec#: WO#: 24093
IS: /JPW
/ /SSS/JTB
= IN
= OUT
N.B. 2,146' +0.26 22.2 143T
N.B. 2,997' +0.45 30.5 143T
N.B. 581' +0.53 8.6 143T
7C#14 U.G. CABLE
2C#6
7C#14 U.G. WLP
0.22
433
-0.26
449
-0.53
0.00
464
2°00'00"
1°50'00"
1°00'00"
5°00'00"
3°30'00"