Bench Mark: Chiseled "□" on southeast end of the M.L. King bridge, on SW corner of concrete slab, Elev. 439.63.

Existing Structure: None.

No Salvage.

LOADING HL-93

Allow 50#/sq. ft. for future wearing surface.

DESIGN SPECIFICATIONS

2012 AASHTO LRFD Bridge Design Specifications, 6th Edition, with 2013 interims

DESIGN STRESSES

FIELD UNITS

f'c = 3,500 psi
fy = 60,000 psi (Reinforcement)
fy = 50,000 psi (M270 Grade 50)

SEISMIC DATA

Seismic Performance Zone (SPZ) = 2
Design Spectral Acceleration at 1.0 sec. (S_{D1}) = 0.24g
Design Spectral Acceleration at 0.2 sec. (S_{DS}) = 0.54g
Soil Site Class = D

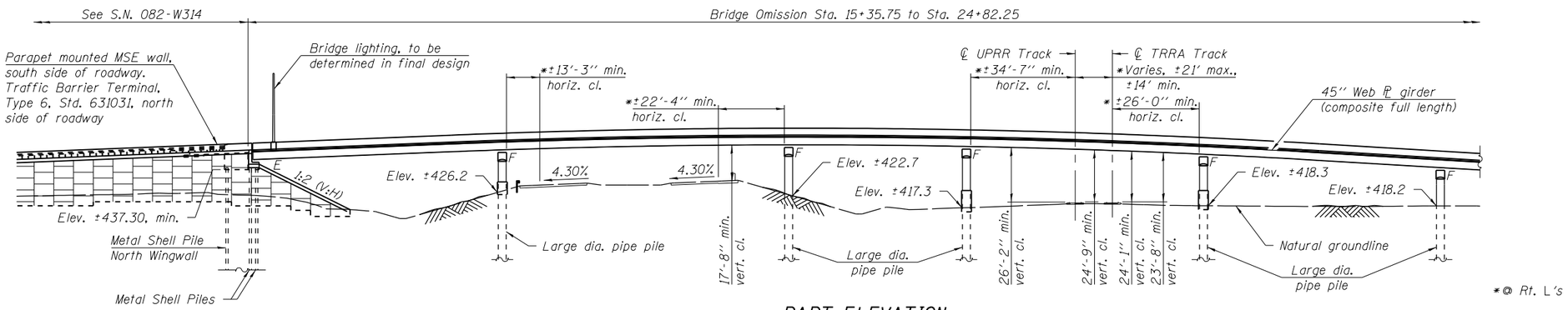

PART ELEVATION

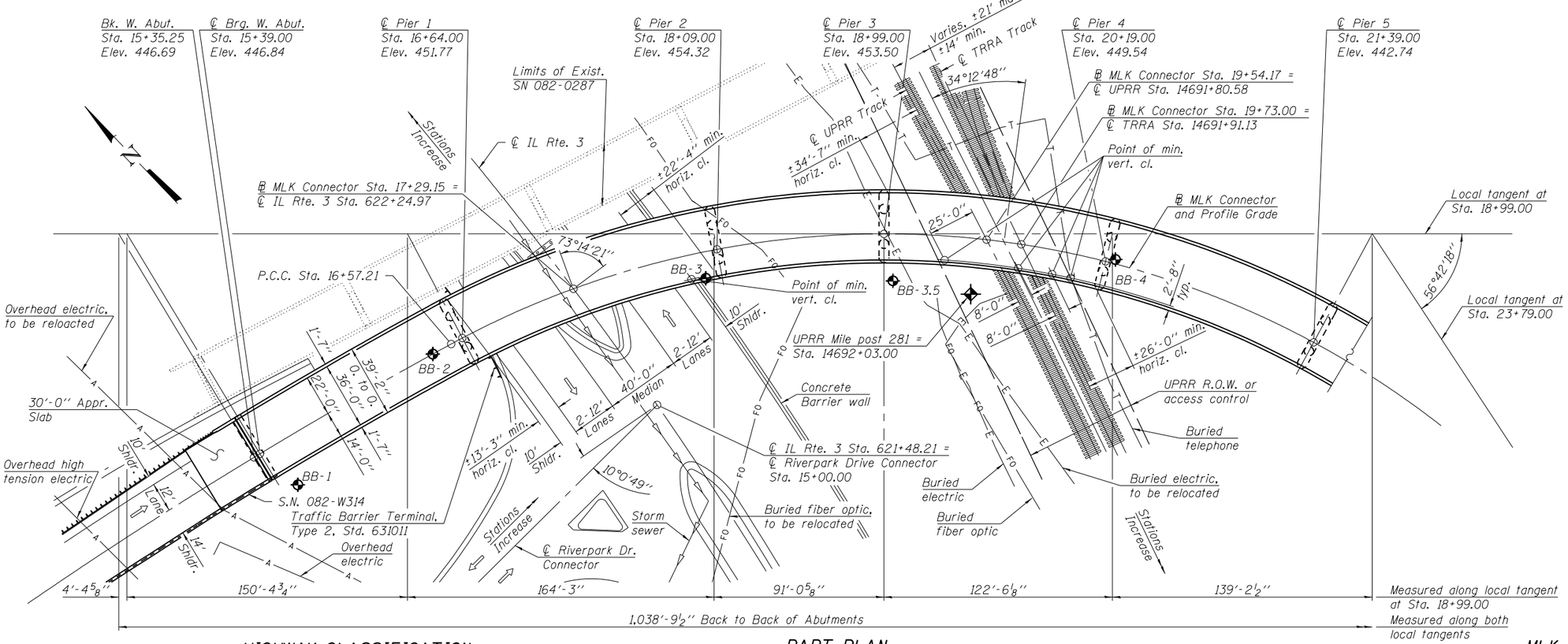

PART PLAN

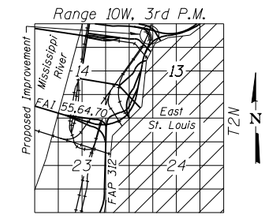

LOCATION SKETCH

HIGHWAY CLASSIFICATION

F.A.I. 64 - MLK Connector
Functional Class: Ramp
ADT: 2,000 (2015); 2,500 (2035)
ADTT: 15%
DHV: 500 (2035)
Design Speed: 40 m.p.h.
Posted Speed: 40 m.p.h.
One-Way Traffic

F.A.P. 788 - IL Route 3
Functional Class: Urban Expressway
ADT: 6,700 (2010); 16,000 (2024)
ADTT: 5%
DHV: 1,090 (2024)
Design Speed: 50 m.p.h.
Posted Speed: 40 m.p.h.
Two-Way Traffic

Notes:
℄ bearing at abutments and ℄ piers are radial to ℄ MLK Connector.
No freefall deck drains will be permitted in the span over the tracks or within 10 ft. of cross arms of a railroad pole line.

GENERAL PLAN
MLK CONNECTOR OVER IL RTE. 3, UPRR, AND TRRA
F.A.I. 64 - SECTION 82-(1,4)B-1
ST. CLAIR COUNTY
STATION 20+09.00
STRUCTURE NO. 082-0349

FILE NAME = I:\1309400-MLK\Cad\S\0820349-76G09.dgn	DESIGNED - E.M. Lagemann	REVISED	
USER NAME = elagemann	CHECKED - T.S. Friederich	REVISED	
PLOT SCALE =	DRAWN - E.M. Lagemann	REVISED	
PLOT DATE = 3/3/2014	CHECKED - T.S. Friederich	REVISED	

HORNER & SHIFRIN, INC. ENGINEERS

STATE OF ILLINOIS
DEPARTMENT OF TRANSPORTATION

SHEET NO. 1 OF 4 SHEETS

F.A.I. RTE.	SECTION	COUNTY	TOTAL SHEETS	SHEET NO.
64	82-(1,4)B-1	ST. CLAIR		
		CONTRACT NO. 76G09		
		ILLINOIS FED. AID PROJECT		

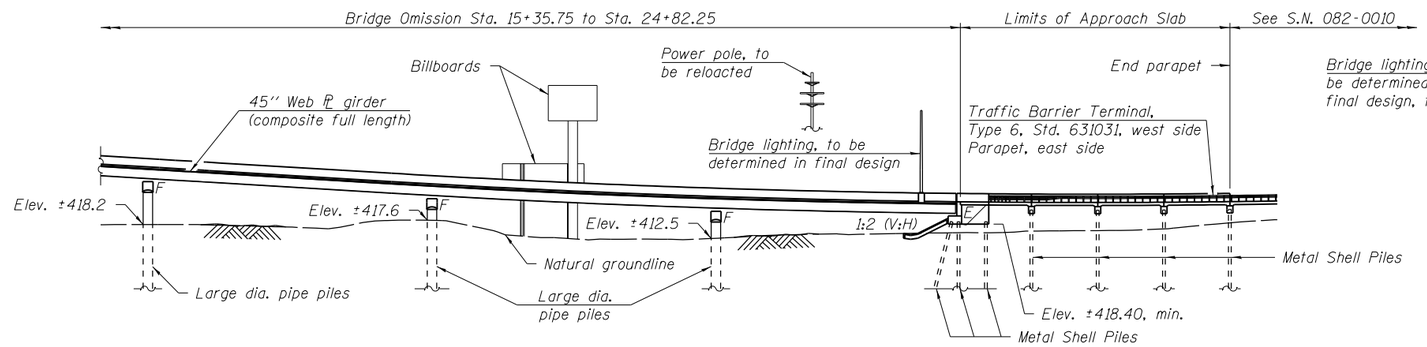

PART ELEVATION

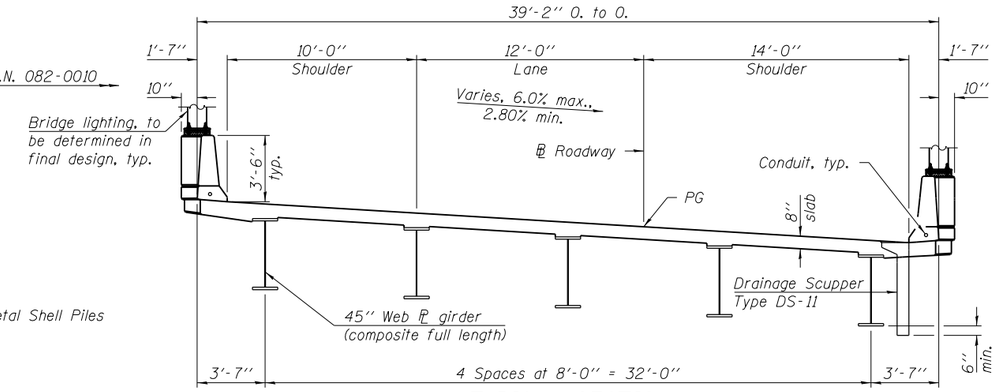

TYPICAL SECTION

(Horiz. dims. shown are radial to ℙ MLK Connector)

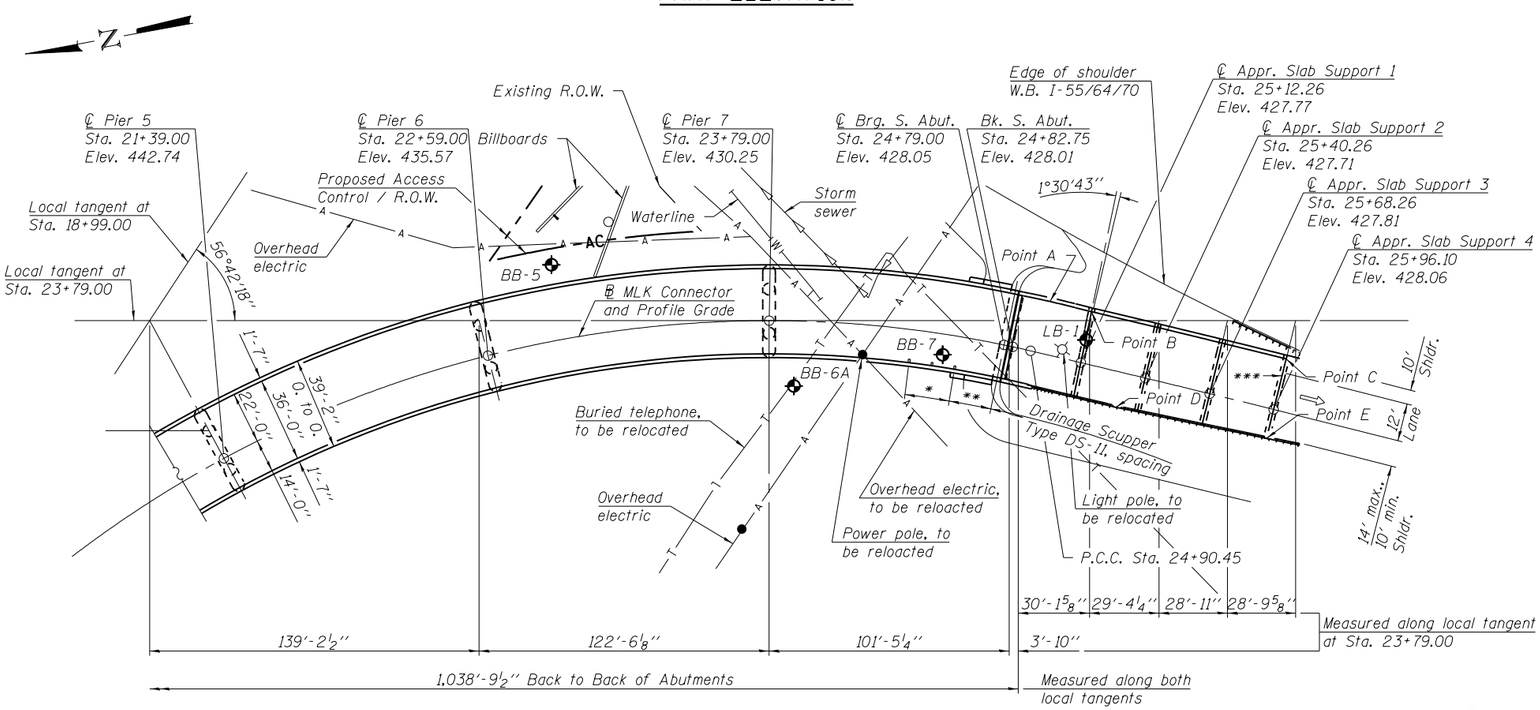

PART PLAN

* 2 Spa. at 9'-9'' = 19'-6''
** 18'-6''
*** Provide 4'' Preformed Joint Seal Expansion Joint

Note:
℄ bearing at abutments and ℄ piers are radial to ℙ MLK Connector, except as shown.
Scupper spacing measured along inside face of parapet.

TABLE OF STATIONS AND OFFSETS FROM ℙ MLK CONNECTOR

Point	Station	Offset
A	24+93.71	22'-2 5/8''
B	25+11.68	22'-0''
C	25+96.10	22'-0''
D	25+31.04	14'-11''
E	25+96.10	12'-7''

CURVE DATA
MLK CONNECTOR CURVE 1

P.I. Sta. = 14+13.01
Δ = 10°46'23'' (Rt.)
D = 2°11'57''
R = 2,605.23'
T = 245.65'
L = 489.85'
E = 11.56'
e = 2.80%
T.R. = N/A
S.E. Run = 77.00'
P.C. Sta. = 11+67.36
P.C.C. Sta. = 16+57.21

CURVE DATA
MLK CONNECTOR CURVE 2

P.I. Sta. = 22+19.44
Δ = 98°26'08'' (Rt.)
D = 11°48'49''
R = 485.00'
T = 562.23'
L = 833.24'
E = 257.51'
e = 6.00%
T.R. = N/A
S.E. Run = 165.00'
P.C.C. Sta. = 16+57.21
P.C.C. Sta. = 24+90.45

CURVE DATA
MLK CONNECTOR CURVE 3

P.I. Sta. = 26+73.36
Δ = 2°39'46'' (Rt.)
D = 0°43'41''
R = 7,870.00'
T = 182.91'
L = 365.75'
E = 2.13'
e = transition
T.R. = N/A
S.E. Run = N/A
P.C.C. Sta. = 24+90.45
P.R.C. Sta. = 28+56.21

CURVE DATA
RELOC. IL RTE. 3

P.I. Sta. = 620+50.65
Δ = 39°34'55'' (Lt.)
D = 2°45'00''
R = 2,083.48'
T = 749.73'
L = 1,439.34'
E = 130.79'
e = 4.30%
T.R. = 36.00'
S.E. Run = 102.00'
P.C. Sta. = 613+00.92
P.T. Sta. = 627+40.27

PROFILE GRADE

(Along ℄ IL Rte. 3)

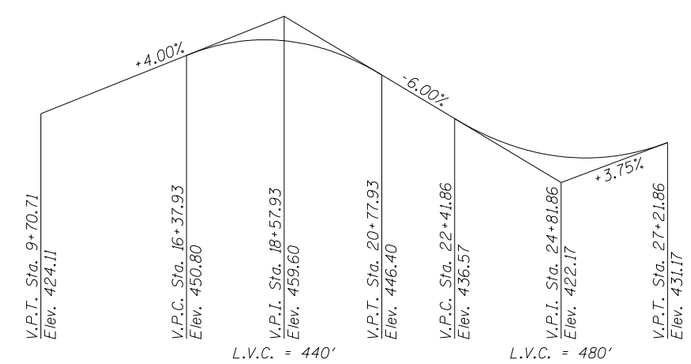

PROFILE GRADE

(Along ℙ MLK Connector)

FILE NAME = I:\1309400-MLK\Cad\S\0820349-76G09.dgn	DESIGNED - E.M. Lagemann	REVISED	
USER NAME = elagemann	CHECKED - T.S. Friederich	REVISED	
PLOT SCALE =	DRAWN - E.M. Lagemann	REVISED	
PLOT DATE = 3/3/2014	CHECKED - T.S. Friederich	REVISED	

HORNER & SHIFRIN, INC. ENGINEERS

STATE OF ILLINOIS
DEPARTMENT OF TRANSPORTATION

GENERAL PLAN
STRUCTURE NO. 082-0349
SHEET NO. 2 OF 4 SHEETS

F.A.I. RTE.	SECTION	COUNTY	TOTAL SHEETS	SHEET NO.
64	82-(1,4)B-1	ST. CLAIR		

CONTRACT NO. 76G09
ILLINOIS FED. AID PROJECT

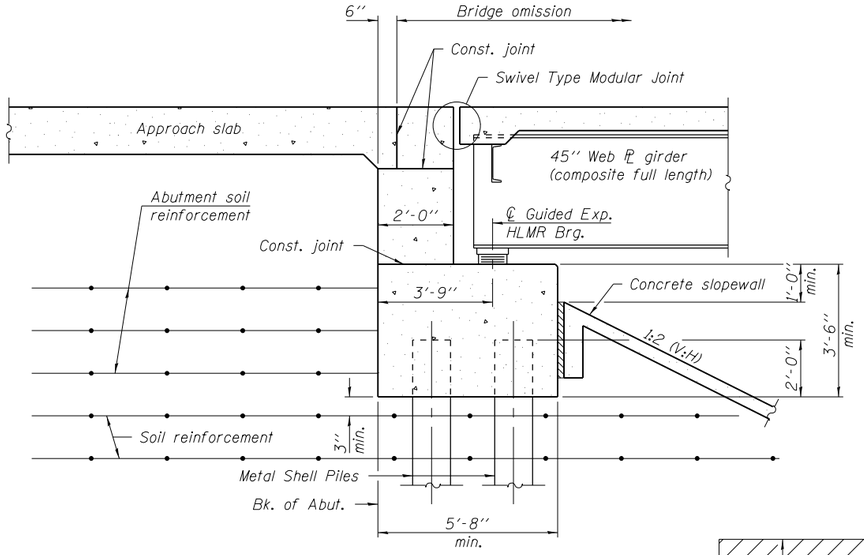

SECTION THRU WEST ABUTMENT

Notes:
Soil reinforcement shown is for MSE wall that parallels the MLK Connector.
For MSE wall details, see S.N. 082-W314.

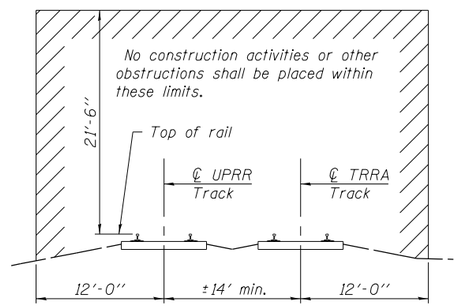

CONSTRUCTION CLEARANCE DIAGRAM

(Horiz. dim. @ Rt. L's to ℄ tracks)

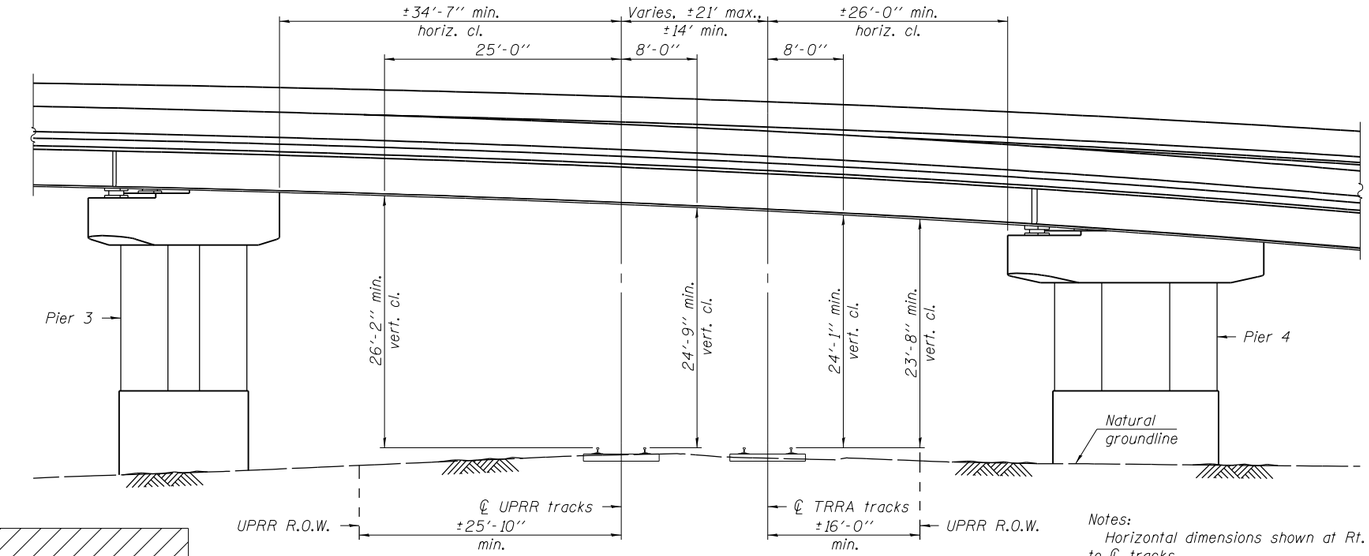

PART ELEVATION

(Looking North along ℄ tracks, showing Span 4)

Notes:
Horizontal dimensions shown at Rt. L's to ℄ tracks.
Horizontal dimensions from ℄ tracks to UPRR R.O.W. are measured near Piers 3 and 4.

Sta.	Elev.
14681+00.00	418.65
14682+00.00	418.80
14683+00.00	418.81
14684+00.00	418.98
14685+00.00	419.48
14686+00.00	419.64
14687+00.00	419.59
14688+00.00	419.71
14689+00.00	419.80
14690+00.00	419.93
14691+00.00	420.05
14692+00.00	420.57
14693+00.00	421.27
14694+00.00	422.37
14695+00.00	423.49
14696+00.00	424.69
14697+00.00	425.75
14698+00.00	426.43
14699+00.00	426.67
14700+00.00	426.91
14701+00.00	426.93
14702+00.00	426.82
14703+00.00	426.18

PROFILE GRADE

(Along UPRR tracks)

Sta.	Elev.
14681+00.00	418.61
14682+00.00	418.76
14683+00.00	418.70
14684+00.00	418.80
14685+00.00	419.00
14686+00.00	419.00
14687+00.00	419.10
14688+00.00	419.40
14689+00.00	419.58
14690+00.00	419.69
14691+00.00	419.94
14692+00.00	420.48
14693+00.00	421.38
14694+00.00	422.33
14695+00.00	423.53
14696+00.00	424.60
14697+00.00	425.60
14698+00.00	426.41
14699+00.00	426.66
14700+00.00	426.49
14701+00.00	426.47
14702+00.00	426.93
14703+00.00	427.48

PROFILE GRADE

(Along TRRA tracks)

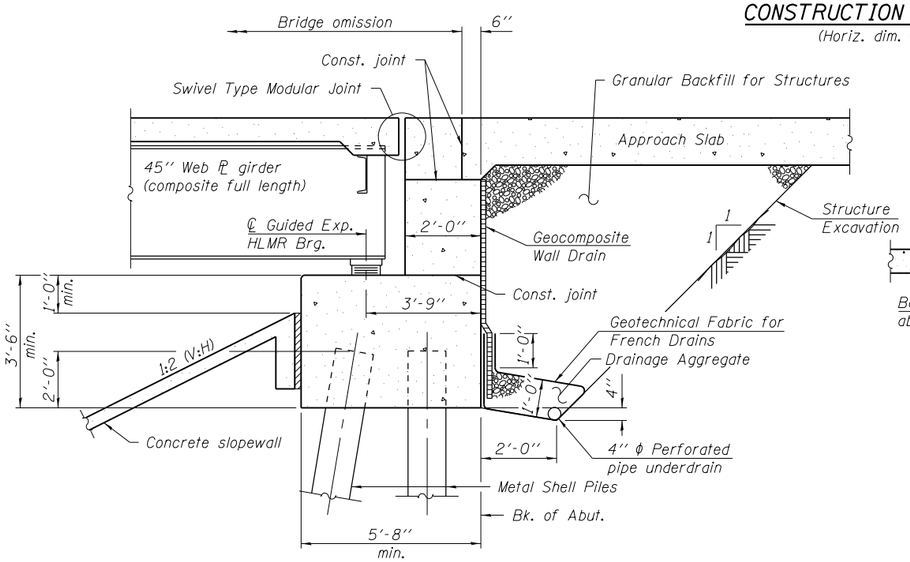

SECTION THRU SOUTH ABUTMENT

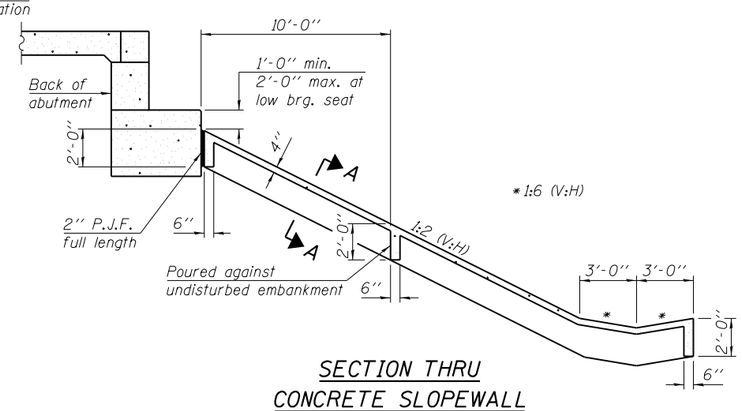

SECTION THRU CONCRETE SLOPEWALL

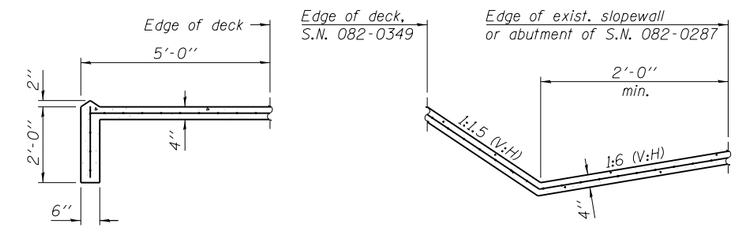

SOUTH ABUTMENT

WEST ABUTMENT

SECTION A-A

FILE NAME = I:\1309400-MLK\Cad\S\0820349-76G09.dgn	DESIGNED - E.M. Lagemann	REVISED	
USER NAME = elagemann	CHECKED - T.S. Friederich	REVISED	
PLOT SCALE =	DRAWN - E.M. Lagemann	REVISED	
PLOT DATE = 3/3/2014	CHECKED - T.S. Friederich	REVISED	

HORNER & SHIFRIN, INC. ENGINEERS

STATE OF ILLINOIS
DEPARTMENT OF TRANSPORTATION

DETAILS
STRUCTURE NO. 082-0349
SHEET NO. 3 OF 4 SHEETS

F.A.I. RTE.	SECTION	COUNTY	TOTAL SHEETS	SHEET NO.
64	82-(1,4)B-1	ST. CLAIR		
		CONTRACT NO. 76G09		
	ILLINOIS FED. AID PROJECT			

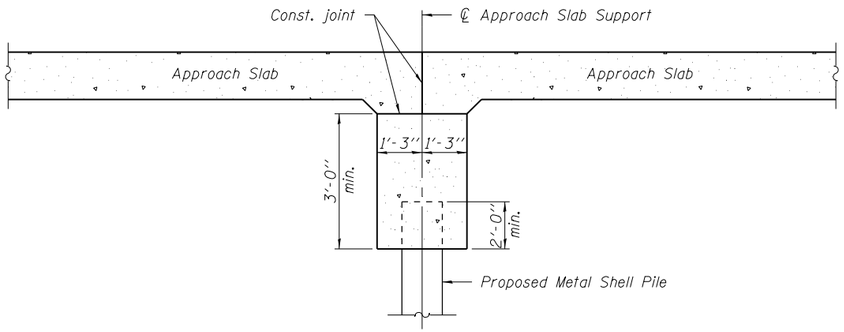

SECTION THRU APPROACH SLAB SUPPORT

(Horiz. dim. @ Rt. L's)

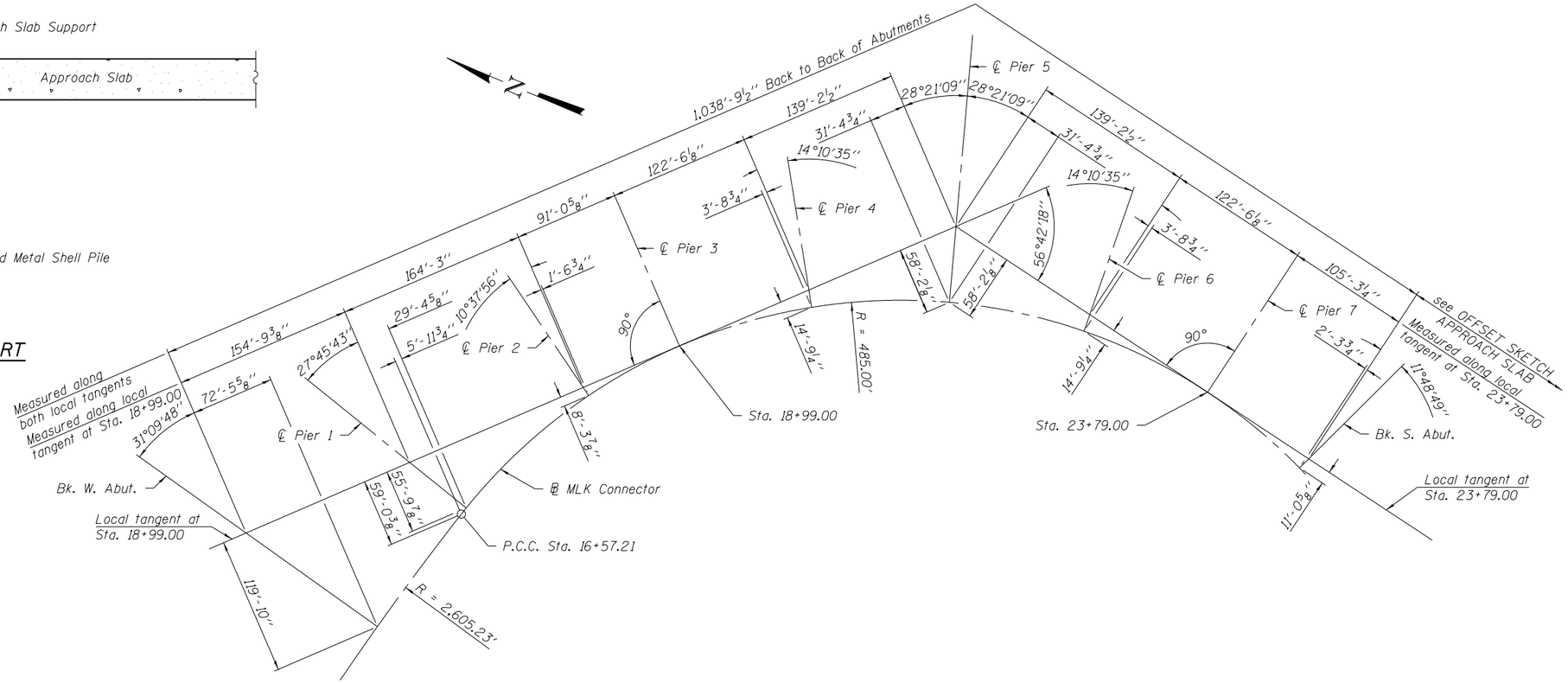

OFFSET SKETCH - S.N. 082-0349

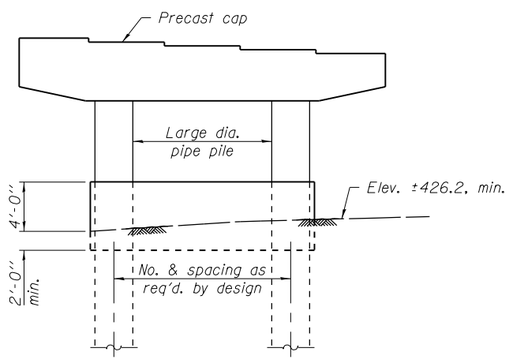

PIER 1 SKETCH

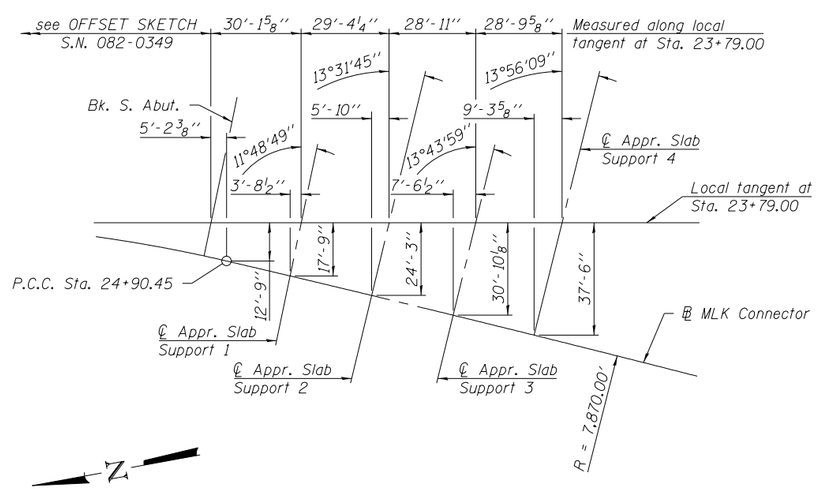

OFFSET SKETCH - APPROACH SLAB

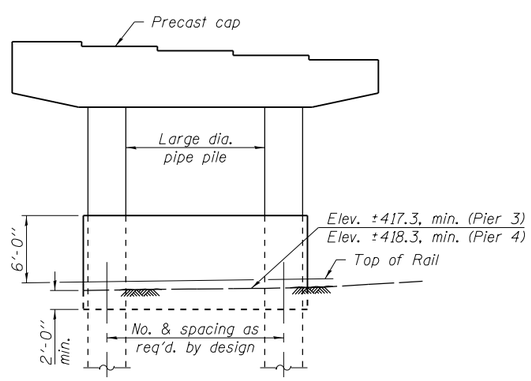

PIERS 3 & 4 SKETCH

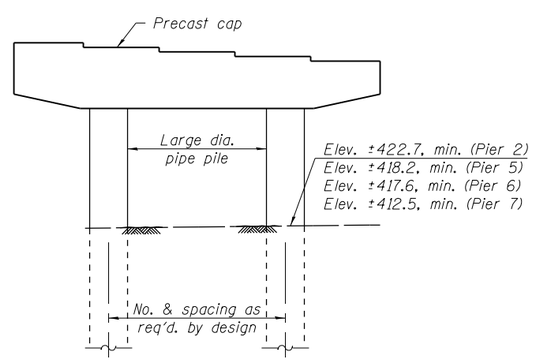

PIERS 2, 5, 6 & 7 SKETCH

FILE NAME = I:\1309400-MLK\Cad\S\0820349-76G09.dgn	DESIGNED - E.M. Lagemann	REVISED	STATE OF ILLINOIS DEPARTMENT OF TRANSPORTATION	DETAILS STRUCTURE NO. 082-0349	F.A.I. RTE.	SECTION	COUNTY	TOTAL SHEETS	SHEET NO.
USER NAME = elagemann	CHECKED - T.S. Friederich	REVISED			64	82-(1,4)B-1	ST. CLAIR		
PLOT SCALE =	DRAWN - E.M. Lagemann	REVISED					CONTRACT NO. 76G09		
PLOT DATE = 3/3/2014	CHECKED - T.S. Friederich	REVISED		SHEET NO. 4 OF 4 SHEETS		ILLINOIS	FED. AID PROJECT		

HORNER & SHIFRIN, INC. ENGINEERS