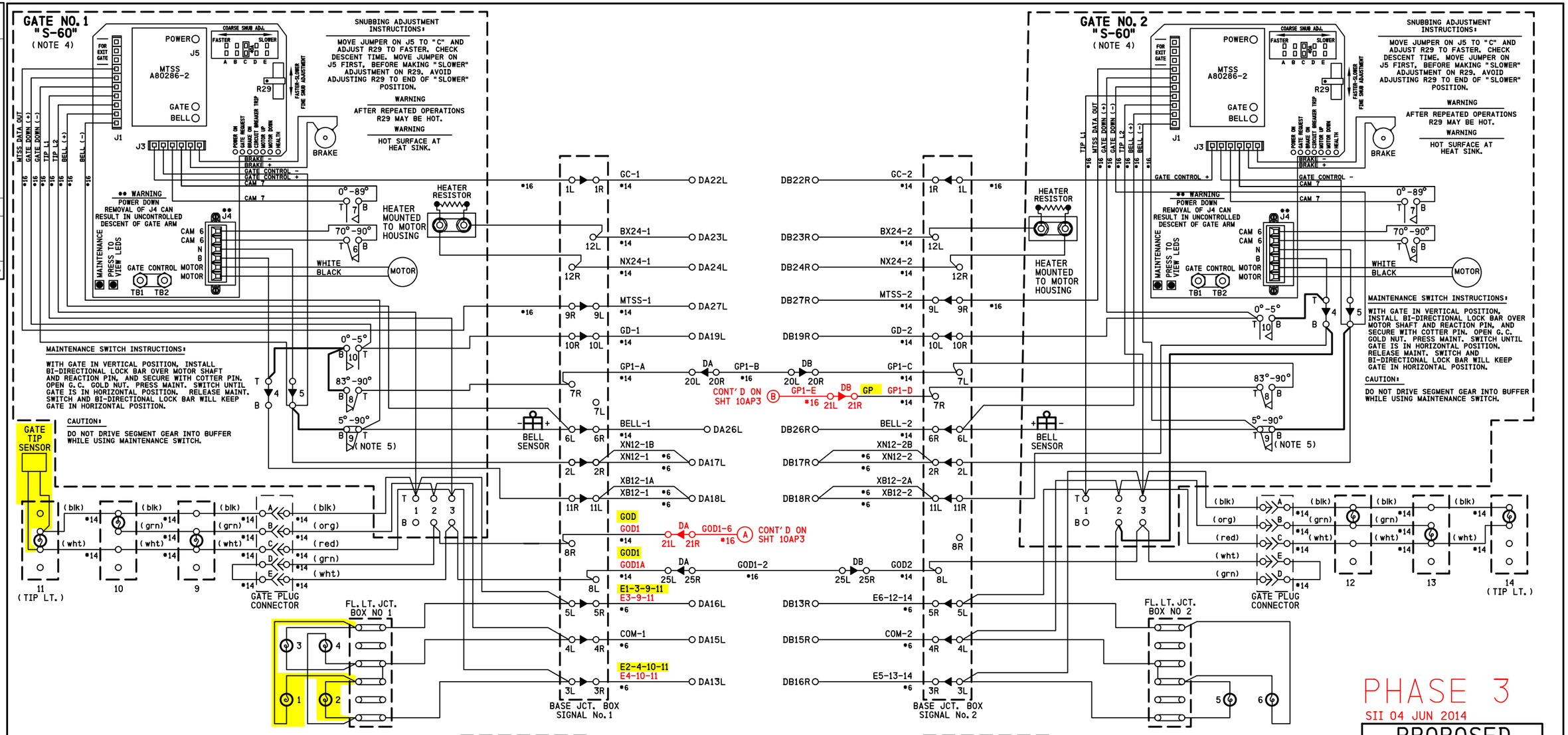

NOTES:

1) ON GATE No. 1 ADD JUMPER BETWEEN TERMINALS:
   ADD JUMPER BETWEEN TERMINAL 4T & 10B,
   ADD JUMPER BETWEEN TERMINAL 10B & 8B
   AND ADD JUMPER BETWEEN TERMINAL 5B & 9B.
2) ON GATE No. 2 ADD JUMPER BETWEEN TERMINALS:
   ADD JUMPER BETWEEN TERMINAL 4T &10B,
   ADD JUMPER BETWEEN TERMINAL 5B & 9B,
   AND ADD JUMPER BETWEEN TERMINAL 4B & 2B.
3) ALL WIRING #10 AWG MINIMUM UNLESS OTHERWISE NOTED. WIRE SIZES SHOWN ARE MINIMUM GAUGE.
4) GATE DESCENT TIME (RELEASE FROM VERTICAL TO FULLY HORIZONTAL) TO BE WITHIN 11 SECONDS.
5) BELL CUT-OUT (5°-90°) WHEN REQUIRED REMOVE STRAP BETWEEN 9B AND 9T.
6) ENSURE ALL TERMINALS HAVE TWO SHOULDER NUTS.

PHASE 3
SII 04 JUN 2014

PROPOSED
DESIGN NO. 13-0125
RED-IN YELLOW-OUT

AS INSTALLED
DATE
BY
(PRINT NAME)

6' X 6' BUNGALOW

PROPOSED D	PROPOSED M	PROPOSED Y	REVISIONS	D	C	COMPLETED D	COMPLETED M	COMPLETED Y	C
			AS INSTALLED			06	04	14	NAD
04	06	14	3 PH DIVIDED HIGHWAY	NAD	MRB				

REGION SOUTHERN
SUB. FREEPORT 382
SIGNALS AND COMMUNICATIONS HOMEWOOD
12 JANUARY 2010
DES. SP
CH. MKN
GATE MECHANISM CONTROL CIRCUITS
SAFETRAN MODEL S60
IL ROUTE 25
SOUTH ELGIN, IL
FRE-038.15-10P3
DOT# 289 905B

SIEMENS INDUSTRY INC
LOUISVILLE DIVISION, LOUISVILLE, KY

SIEMENS INDUSTRY INC
DES.: NAD | DATE: 04/06/14 | JOB NO.: PICA10521
CKD.: MRB | ISSUE DATE: N/A | EST. NO.: XP-7370
DRN.: NAD | PLAN NO.: N/A | SHEET 10 OF 17
P. TIME: 08:00 | P. DATE: 14-JUL-2014 | CAD ID.: FRE-038.15-10P3

NO.	DATE	BY	DESCRIPTION	APP. BY
1				
2				
3				
4				
5				

REVISIONS

fre-038.15-10p3.dgn
14-JUL-2014

CONTACT	CLOSED AT	FUNCTION
6	70° -90°	POWER DOWN CONTROL
7	0° -89°	POWER UP CONTROL
8	83° -90°	FLASHING LGT. CONTROL
9	5° -90°	BELL CONTROL
10	0° -5°	GATE DOWN INDICATION
11	N/A	SPARE
12	N/A	SPARE

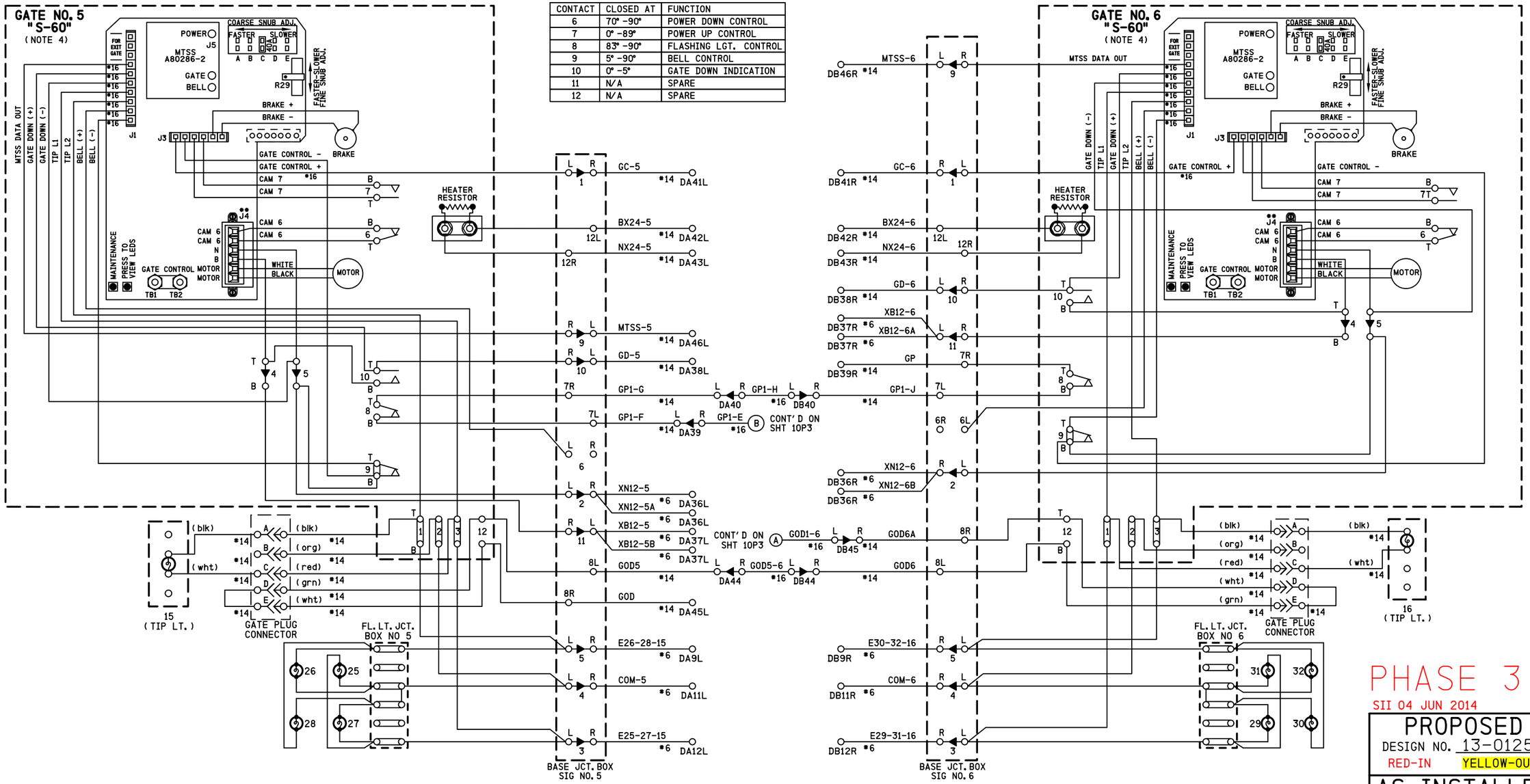

PHASE 3

SII 04 JUN 2014

PROPOSED
DESIGN NO. 13-0125
RED-IN YELLOW-OUT

AS INSTALLED
DATE
BY
(PRINT NAME)

NOTES

1) ON GATE No. 5 ADD JUMPER BETWEEN TERMINALS:
ADD JUMPER BETWEEN TERMINAL 4T & 10B,
ADD JUMPER BETWEEN TERMINAL 5B & 9B

2) ON GATE No. 6 ADD JUMPER BETWEEN TERMINALS:
ADD JUMPER BETWEEN TERMINAL 4T &10B,
ADD JUMPER BETWEEN TERMINAL 5B & 9B

3) ALL WIRING #10 AWG UNLESS OTHERWISE NOTED

4) GATE DESCENT TIME (RELEASE FROM VERTICAL TO FULLY HORIZONTAL) TO BE WITHIN 11 SECONDS

5) BELL CUT-OUT (5°-90°) WHEN REQUIRED REMOVE STRAP BETWEEN 9B AND 9T

6) ENSURE ALL TERMINALS HAVE TWO SHOULDER NUTS

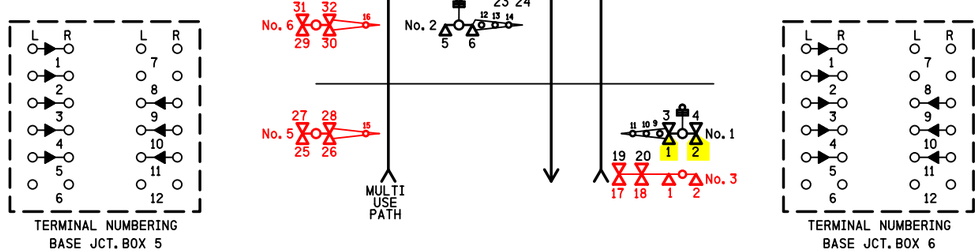

TERMINAL NUMBERING BASE JCT. BOX 5

TERMINAL NUMBERING BASE JCT. BOX 6

6' X 6' BUNGALOW

PROPOSED D	M	Y	REVISIONS	D	C	COMPLETED D	M	Y	C

REGION SOUTHERN
SUB. FREEPORT 382

SIGNALS AND COMMUNICATIONS HOMEWOOD
04 JUNE 2014
DES. NAD
CH. MRB

GATE 5&6 MECH. CONTROL CIRCUITS
SAFETRAN S-60
IL ROUTE 25
SOUTH ELGIN, IL

FRE-038.15-10APH3

DOT# 289 905B

SIEMENS INDUSTRY INC
LOUISVILLE DIVISION, LOUISVILLE, KY

SIEMENS INDUSTRY INC

DES.: NAD	DATE: 04/06/14	JOB NO.: PICA10521	
CKD.: MRB	ISSUE DATE: N/A	EST. NO.: XP-7370	
DRN.: NAD	PLAN NO.: N/A	SHEET 10A OF 17	
P TIME: 08:00	P DATE: 14-JUL-2014	CAD ID.: FRE-038.15-10AP3	

NO.	DATE	BY	DESCRIPTION	APP. BY
1				
2				
3				
4				
5				

REVISIONS

fre-038.15-10ap3.dgn
14-JUL-2014

REVISIONS				
NO.	DATE	BY	DESCRIPTION	APP. BY
1				
2				
3				
4				
5				

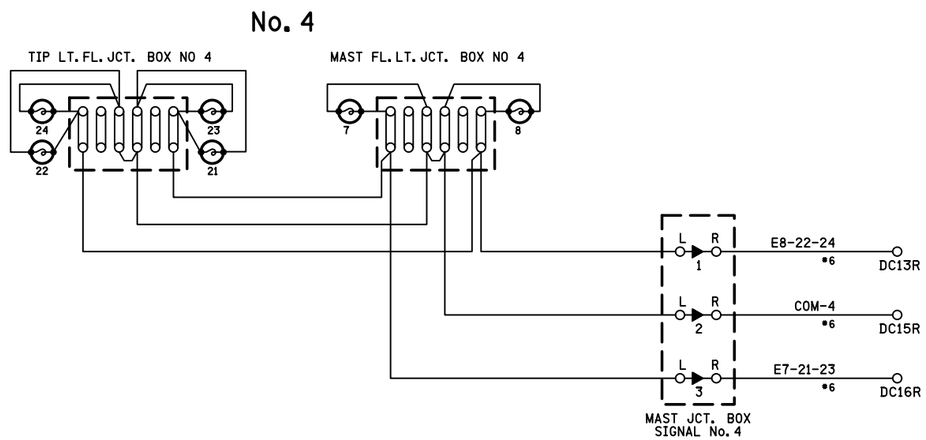

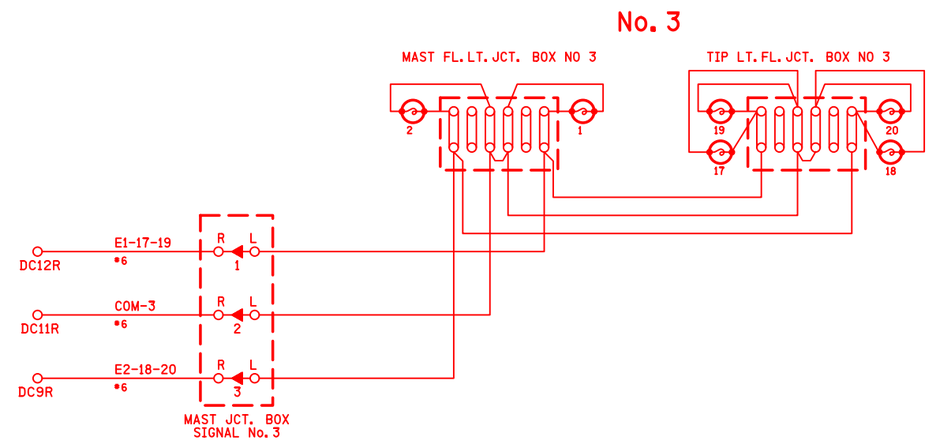

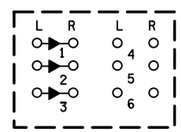

TERMINAL NUMBERING
BASE JCT. BOX 4

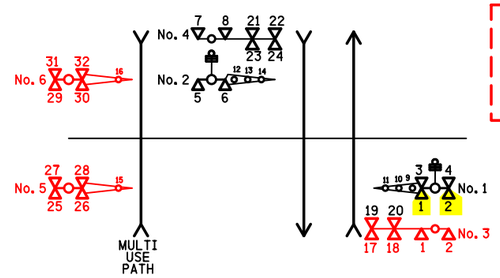

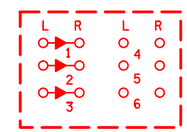

TERMINAL NUMBERING
BASE JCT. BOX 3

NOTES

1) ALL WIRING #10 AWG UNLESS OTHERWISE NOTED

2) ENSURE ALL TERMINALS HAVE TWO SHOULDER NUTS

PHASE 3

SII 04 JUN 2014

PROPOSED
DESIGN NO. 13-0125
RED-IN YELLOW-OUT

AS INSTALLED
DATE _____
BY _____
(PRINT NAME)

6' X 6' BUNGALOW

PROPOSED D	PROPOSED M	PROPOSED Y	REVISIONS	D	C	COMPLETED D	COMPLETED M	COMPLETED Y	C
04	06	14	3 PH DIVIDED HIGHWAY	NAD	MRB				

REGION SOUTHERN
SUB. FREEPORT 382

SIGNALS AND COMMUNICATIONS HOMEWOOD
DES. NAD
04 JUNE 2014
CH. MRB
SIGNAL 3 &4 CONTROL CIRCUIT

IL ROUTE 25
SOUTH ELGIN, IL

FRE-038.15-10BPH3 APH2

DOT# 289 905B

SIEMENS INDUSTRY INC			
DES. : NAD	DATE: 04/06/14	JOB NO.: PICA10521	
CKD. : MRB	ISSUE DATE: N/A	EST. NO. XP-7370	
DRN. : NAD	PLAN NO.: N/A	SHEET 10 OF 17	
P. TIME: 08:00	P. DATE: 14-JUL-2014	CAD ID.: FRE-038.15-10P1	

SIEMENS INDUSTRY INC
LOUISVILLE DIVISION, LOUISVILLE, KY

fre-038.15-10bp3.dgn
14-JUL-2014

REVISIONS				
NO.	DATE	BY	DESCRIPTION	APP. BY
1				
2				
3				
4				
5				

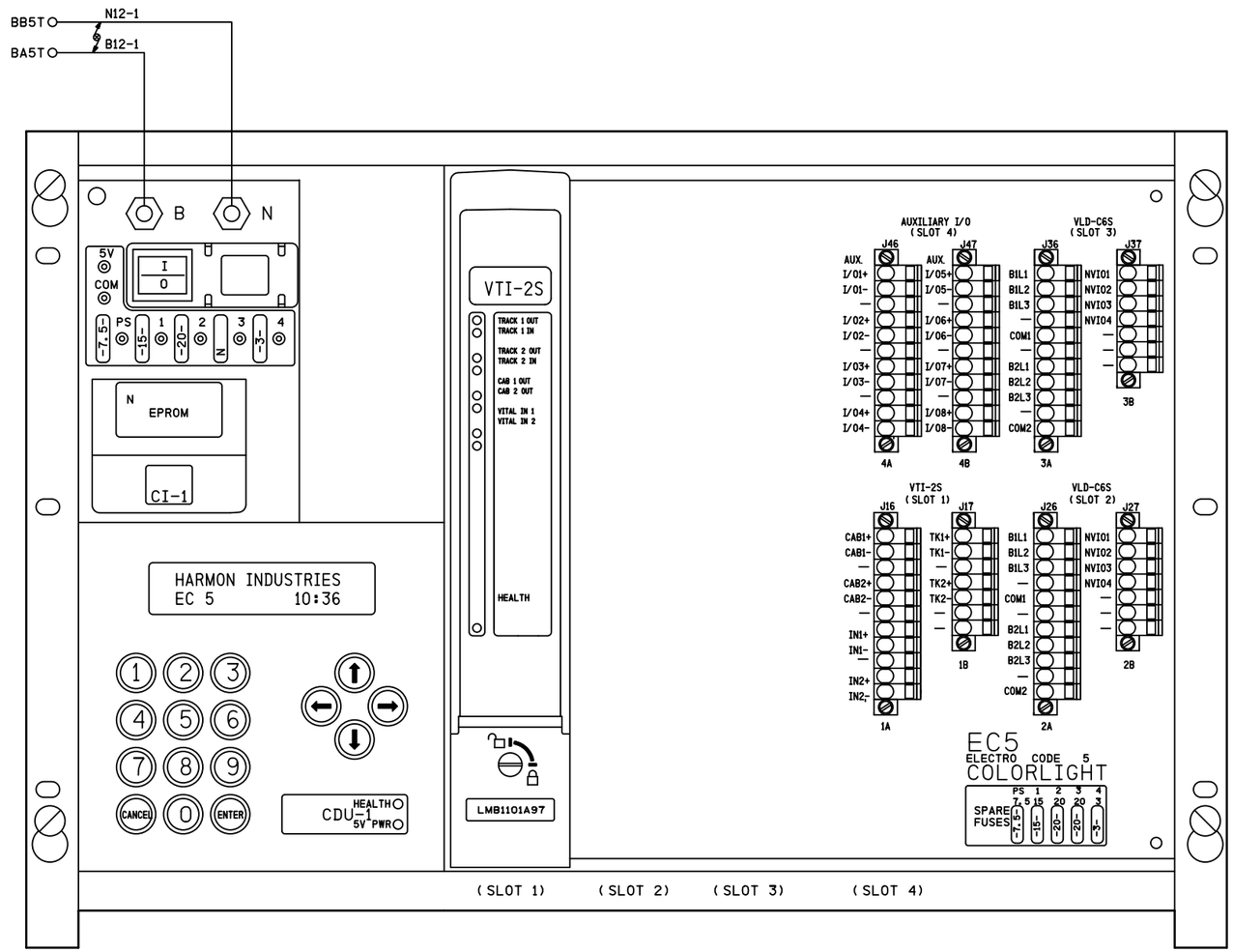

NOTES:

1) ALL WIRING #10 AWG UNLESS OTHERWISE NOTED. WIRE SIZES SHOWN ARE MEDIUM GAUGE.

2) DENOTES TWISTED PAIR.

6' X 6' BUNGALOW

PROPOSED D	PROPOSED M	PROPOSED Y	REVISIONS	D	C	COMPLETED D	COMPLETED M	COMPLETED Y	C
			AS INSTALLED			06	04	14	NAD

REGION SOUTHERN

SUB. FREEPORT 382

SIGNALS AND COMMUNICATIONS HOMEWOOD

12 JANUARY 2010

DES. SP

CH. MKN

EC5
POWER
IL ROUTE 25
SOUTH ELGIN, IL

FRE-038.15-11

DOT# 289 905B

fre-038.15-11.dgn
14-JUL-2014

SIEMENS INDUSTRY INC			
DES. : NAD	DATE: 04/06/14	JOB NO. : PICA10521	
CKD. : MRB	ISSUE DATE: N/A	EST. NO. :XP-7370	
DRN. : NAD	PLAN NO. :N/A	SHEET 11 OF 17	
P. TIME:08:00	P. DATE: 14-JUL-2014	CAD ID. : FRE-038.15-11	

SIEMENS INDUSTRY INC
LOUISVILLE DIVISION, LOUISVILLE, KY

REVISIONS			
NO.	DATE	BY	DESCRIPTION	APP. BY
1				
2				
3				
4				
5				

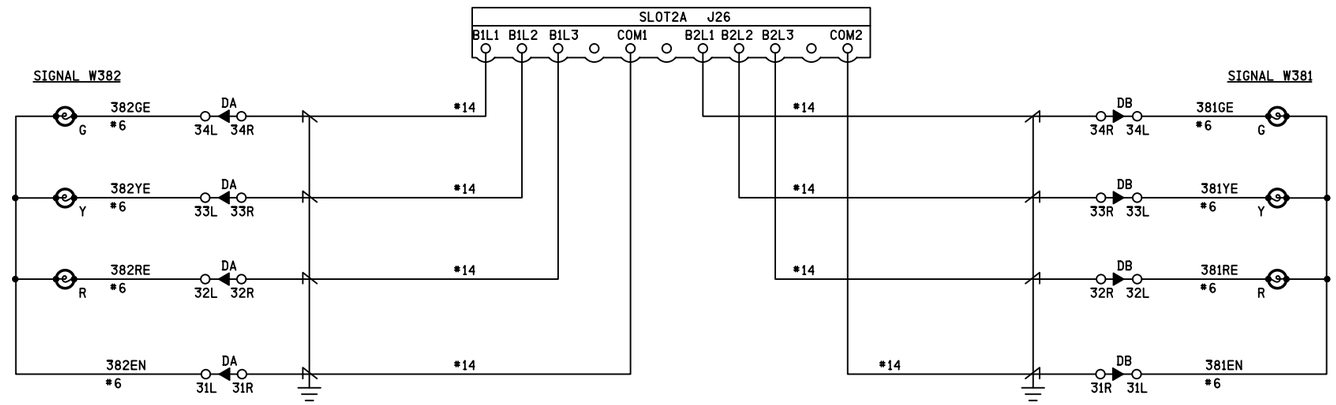

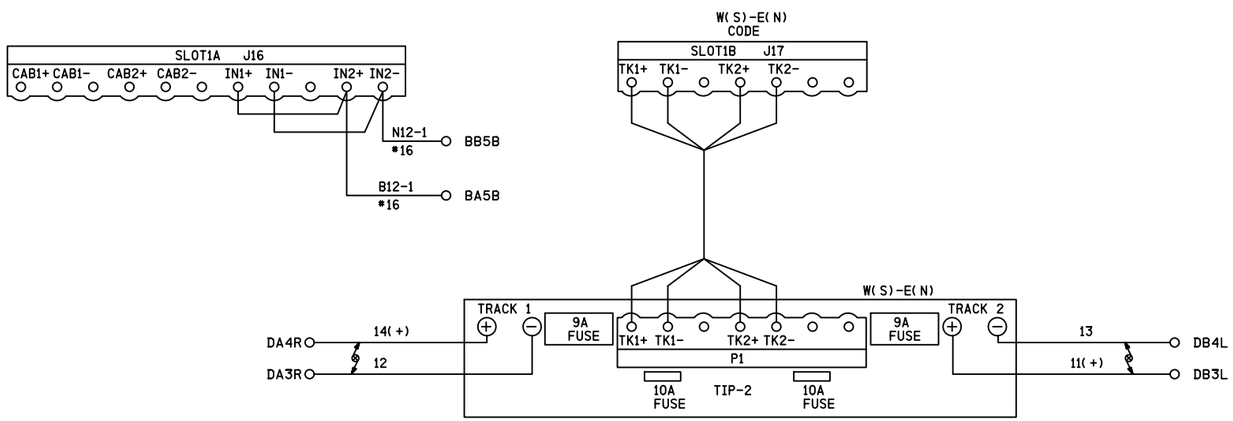

NOTES:

1) ALL WIRING #10 AWG UNLESS OTHERWISE NOTED. WIRE SIZES SHOWN ARE MEDIUM GAUGE.

2) DENOTES TWISTED PAIR.

6' X 6' BUNGALOW

PROPOSED D	PROPOSED M	PROPOSED Y	REVISIONS	D	C	COMPLETED D	COMPLETED M	COMPLETED Y	C
			AS INSTALLED			06	04	14	NAD

REGION SOUTHERN

SUB. FREEPORT 382

SIGNALS AND COMMUNICATIONS HOMEWOOD

12 JANUARY 2010

DES. SP

CH. MKN

EC5
LIGHTING AND TRACK CONNECTIONS
IL ROUTE 25
SOUTH ELGIN, IL

FRE-038.15-12

DOT# 289 905B

SIEMENS INDUSTRY INC

DES. : NAD	DATE: 04/06/14
CKD. : MRB	ISSUE DATE: N/A
DRN. : NAD	PLAN NO. : N/A
P. TIME: 08:00	P. DATE: 14-JUL-2014
JOB NO. : PICA10521	
EST. NO. : XP-7370	
SHEET 12 OF 17	
CAD ID. : FRE-038.15-12	

SIEMENS INDUSTRY INC
LOUISVILLE DIVISION, LOUISVILLE, KY

fre-038.15-12.dgn
14-JUL-2014

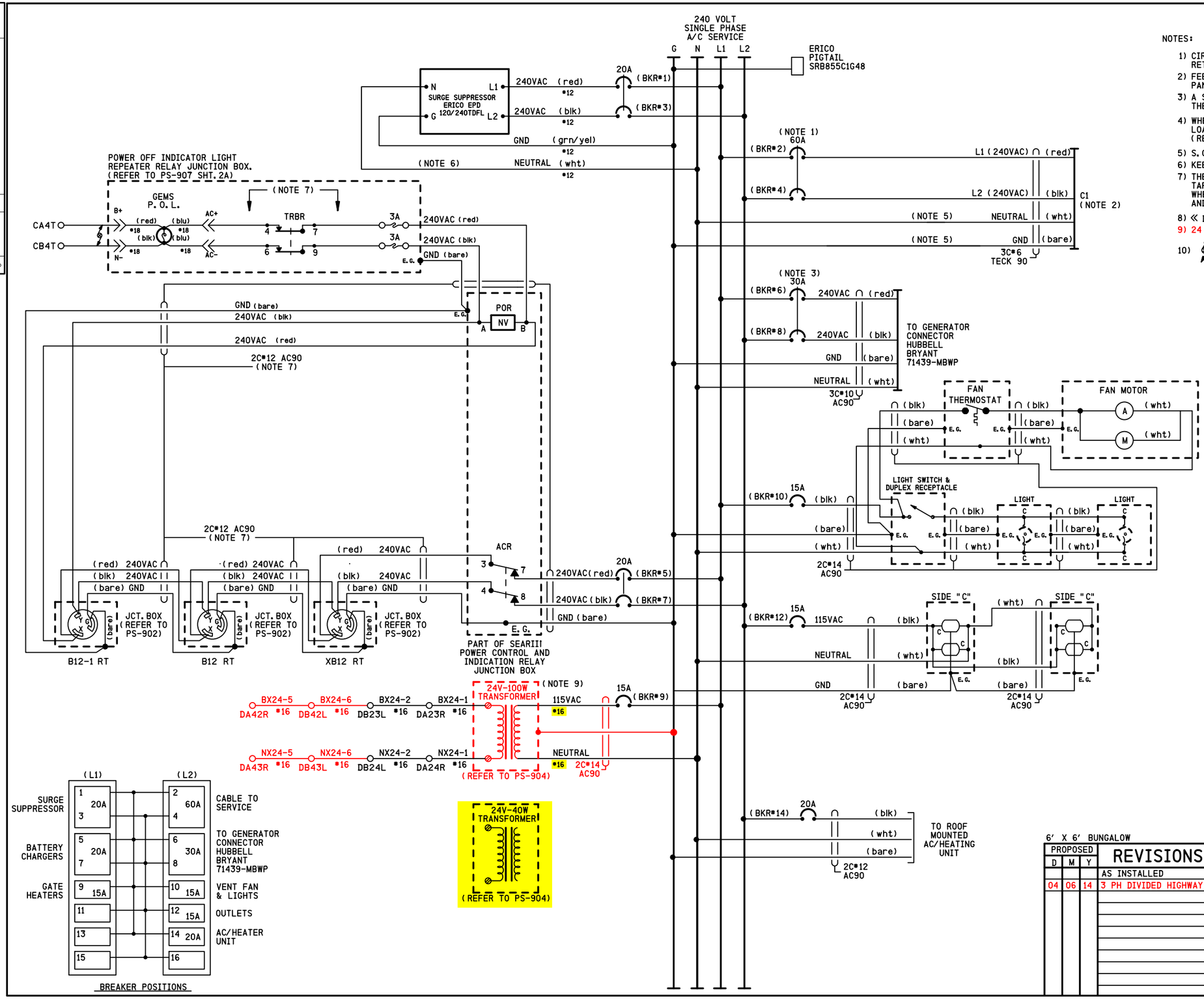

NOTES:

1) CIRCUIT BREAKER NOT TO EXCEED 60 AMPERES. RETAINING KIT PK4MB2LA MUST BE USED WITH 60A BREAKER.
2) FEEDER CIRCUIT BREAKER, AT STUB POLE SERVICE PANEL, NOT TO EXCEED 60 AMPERES.
3) A SWITCH TRANSFER KIT MUST BE INSTALLED BETWEEN THE SERVICE DISCONNECT BREAKER AND THE GENERATOR HOOK UP.
4) WHERE SEPARATE GROUND WIRE EXISTS BETWEEN THE SERVICE AND THE LOAD CENTER, REMOVE THE BRASS COLORED BONDING SCREW. (REFER TO SCHEMATIC ON BOX COVER FOR EXACT LOCATION)
5) S.C.#6 STRANDED, CSA TYPE R90 (X-LINK)
6) KEEP LEADS AS SHORT AS POSSIBLE
7) THE WHITE CONDUCTOR MUST BE MADE PERMANENTLY UNIDENTIFIABLE BY TAPING THIS CONDUCTOR RED. TAPING MUST BE CONTINUOUS WHERE THE SEPARATE CONDUCTORS HAVE BEEN MADE ACCESSIBLE AND VISIBLE.
8) « DENOTES WAGO TERMINAL
9) 24 VOLT - 100 WATT TRANSFORMER (CN STOCK #02-45-377)
10) ⊗ DENOTES TWISTED PAIR.

RELAY DETAIL

RELAY - POTTER & BRUMFIELD
MODEL KUP-14A15-240 SOCKET MOUNTABLE
240 VDC W/ 3 FORM C CONTACTS.

SOCKET - SCREW TERMINAL
MODEL 27E121.

RELAY WIRING DIAGRAM (REAR VIEW)

NOTE:
SOCKET NUMBERING CORRESPONDS DIRECTLY WITH RELAY NUMBERING.
(COIL SHOWN ENERGIZED)

9) 24 VOLT - 40 WATT TRANSFORMER (CN STOCK #02-45-367)

PHASE 3

SII 04 JUN 2014

PROPOSED
DESIGN NO. 13-0125
RED-IN YELLOW-OUT

AS INSTALLED
DATE
BY
(PRINT NAME)

6' X 6' BUNGALOW

PROPOSED D	M	Y	REVISIONS	D	C	COMPLETED D	M	Y	C
			AS INSTALLED			06	04	14	NAD
04	06	14	3 PH DIVIDED HIGHWAY	NAD	MRB				

REGION SOUTHERN
SUB. FREEPORT 382

SIGNALS AND COMMUNICATIONS
HOMEWOOD
12 JANUARY 2010
DES. SP
CH. MKN

POWER DISTRIBUTION
AC
IL ROUTE 25
SOUTH ELGIN, IL

FRE-038.15-13P3

DOT# 289 905B

NO.	DATE	BY	DESCRIPTION	APP. BY
1				
2				
3				
4				
5				

REVISIONS

SIEMENS INDUSTRY INC

DES. : NAD	DATE: 04/06/14	JOB NO.: PICA10521	
CKD. : MRB	ISSUE DATE: N/A	EST. NO.: XP-7370	
DRN. : NAD	PLAN NO.: N/A	SHEET 13 OF 17	
P TIME: 08:00	P DATE: 14-JUL-2014	CAD ID.: FRE-038.15-13	

SIEMENS INDUSTRY INC
LOUISVILLE DIVISION, LOUISVILLE, KY

fre-038.15-13ph3.dgn
14-JUL-2014

REVISIONS				
NO.	DATE	BY	DESCRIPTION	APP. BY
1				
2				
3				
4				
5				

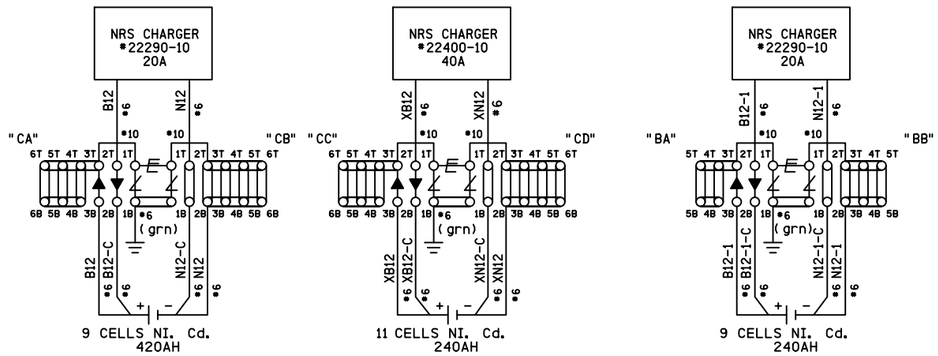

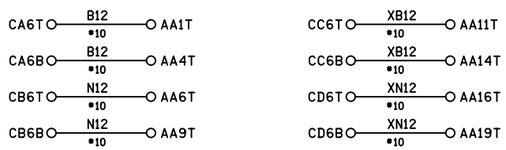

6' X 6' BUNGALOW

PROPOSED D	PROPOSED M	PROPOSED Y	REVISIONS	D	C	COMPLETED D	COMPLETED M	COMPLETED Y	C
			AS INSTALLED			06	04	14	NAD

REGION SOUTHERN

SUB. FREEPORT 382

SIGNALS AND COMMUNICATIONS HOMEWOOD

DES. SP

12 JANUARY 2010

CH. MKN

POWER DISTRIBUTION
DC
IL ROUTE 25

SOUTH ELGIN, IL

FRE-038.15-14

DOT# 289 905B

fre-038.15-14.dgn
14-JUL-2014

SIEMENS INDUSTRY INC

DES. : NAD	DATE: 04/06/14	JOB NO.: PICA10521	
CKD. : MRB	ISSUE DATE: N/A	EST. NO. XP-7370	
DRN. : NAD	PLAN NO.: N/A	SHEET 14 OF 17	
P. TIME: 08:00	P. DATE: 14-JUL-2014	CAD ID.: FRE-038.15-14	

SIEMENS INDUSTRY INC
LOUISVILLE DIVISION, LOUISVILLE, KY

REVISIONS				
NO.	DATE	BY	DESCRIPTION	APP. BY
1				
2				
3				
4				
5				

Program Report

Location and SIN

DOT Number: 289905B
Milepost Number: 38.15
Site Name: IL RTE 25

SIN: 762010010016

MCF and Template Selection

MCF Name: GCP-T6X-02-1.mcf
MCF Revision: 021
MCFCRC: 6076E435

Template = 1D:3 Uni pairs

Check Numbers

Office Check No. (DT 4.6.0): 4A94D8FE 6D3A1F76
Office Check Number: 4A94D8FE 6D3A1F76
Config. Check Number: 1EB23BDE 5EEC1DEA
(Based on MCF Revision 021)

Program

BASIC: module configuration
Track 1 Slot = Track
Track 2/RIO 1 Slot = Track
Track 3 Slot = Not Used
Track 4 Slot = Not Used
Track 5/RIO 2 Slot = Not Used
Track 6/RIO 3 Slot = Not Used
SSCC-1 Slot = SSCC31
SSCC-2 Slot = SSCC31
SEAR Used = Yes

BASIC: MS/GCP operation
Track 1 : MS/GCP Operation = Yes
Track 2 : MS/GCP Operation = Yes

BASIC: Island operation
Track 1 : Island Used = Internal
Track 2 : Island Used = No

BASIC: preemption
Preempt Logic = No

BASIC: radio Dax links
Radio DAX link A Used = No
Radio DAX link B Used = No

BASIC: Vital Comms links
Vital Comms link 1 Used = No
Vital Comms link 2 Used = No

PREDICTORS: track 1
Track 1 : Prime Used = Yes
Track 1 : Dax A Used = No
Track 1 : Dax B Used = No
Track 1 : Dax C Used = No
Track 1 : Dax D Used = No
Track 1 : Dax E Used = No
Track 1 : Dax F Used = No
Track 1 : Dax G Used = No

PREDICTORS: track 2
Track 2 : Prime Used = Yes
Track 2 : Dax A Used = No
Track 2 : Dax B Used = No
Track 2 : Dax C Used = No
Track 2 : Dax D Used = No
Track 2 : Dax E Used = No
Track 2 : Dax F Used = No
Track 2 : Dax G Used = No

GCP: track 1
Track 1 : GCP Freq Category = Standard
Track 1 : GCP Frequency = 348 Hz
Track 1 : Approach Distance = 2566 ft
Track 1 : Uni/Bi/Sim-Bidirni = Unidirni
Track 1 : GCP Transmit Level = High
Track 1 : Island Connection = Isli
Track 1 : Island Distance = 150 ft
Track 1 : Computed Distance = 9999 ft
Track 1 : Linearization Steps = 100

GCP: track 1 enhanced det
Track 1 : Inbound PS Sensitivity = High
Track 1 : Speed Limiting Used = Yes
Track 1 : Outbound False Act Lvl = Normal
Track 1 : Outbound PS Timer = 20 sec
Track 1 : Trailing Switch Logic = On
Track 1 : Post Joint Detn Time = 15 sec
Track 1 : Adv Appr Predn = No
Track 1 : Cancel Pickup Delay = This Isl

GCP: track 1 prime
Track 1 : Prime Warning Time = 31 sec
Track 1 : Prime Offset Distance = 0 ft
Track 1 : Switch MS EZ Level = 12
Track 1 : Prime MS/GCP Mode = Pred
Track 1 : Prime Pickup Delay = 30 sec
Track 1 : Prime UAX = Not Used

GCP: track 1 pos start
Track 1 : Positive Start = Off
Track 1 : Sudden Shnt Det Used = No
Track 1 : Low EZ Detection Used = No

GCP: track 1 MS Control
Track 1 : MS/GCP Ctrl IP Used = No
Track 1 : MS Sensitivity Level = 0
Track 1 : Compensation Level = 1300
Track 1 : Warn Time-Ballast Comp = High
Track 1 : Low EX Adjustment = 39
Track 1 : Bidirn Dax Passthru = No
Track 1 : False Act on Train Stop = No
Track 1 : EX Limiting Used = Yes
Track 1 : EZ Correction Used = Yes

GCP: track 2
Track 2 : GCP Freq Category = Standard
Track 2 : GCP Frequency = 348 Hz
Track 2 : Approach Distance = 2566 ft
Track 2 : Uni/Bi/Sim-Bidirni = Unidirni
Track 2 : GCP Transmit Level = High
Track 2 : Island Connection = Isli
Track 2 : Island Distance = 0 ft
Track 2 : Computed Distance = 9999 ft
Track 2 : Linearization Steps = 100

GCP: track 2 enhanced det
Track 2 : Inbound PS Sensitivity = High
Track 2 : Speed Limiting Used = Yes
Track 2 : Outbound False Act Lvl = Normal
Track 2 : Outbound PS Timer = 20 sec
Track 2 : Trailing Switch Logic = On
Track 2 : Post Joint Detn Time = 15 sec
Track 2 : Adv Appr Predn = No
Track 2 : Cancel Pickup Delay = This Isl

GCP: track 2 prime
Track 2 : Prime Warning Time = 31 sec
Track 2 : Prime Offset Distance = 0 ft
Track 2 : Switch MS EZ Level = 12
Track 2 : Prime MS/GCP Mode = Pred
Track 2 : Prime Pickup Delay = 30 sec
Track 2 : Prime UAX = Not Used

GCP: track 2 pos start
Track 2 : Positive Start = Off
Track 2 : Sudden Shnt Det Used = No
Track 2 : Low EZ Detection Used = No

GCP: track 2 MS Control
Track 2 : MS/GCP Ctrl IP Used = No
Track 2 : MS Sensitivity Level = 0
Track 2 : Compensation Level = 1300
Track 2 : Warn Time-Ballast Comp = Low
Track 2 : Low EX Adjustment = 39
Track 2 : Bidirn Dax Passthru = No
Track 2 : False Act on Train Stop = No
Track 2 : EX Limiting Used = Yes
Track 2 : EZ Correction Used = Yes

ISLAND: track 1
Track 1 : Isl Frequency = 8.3 kHz
Track 1 : Pickup Delay (2s +) = 0 sec
Track 1 : Isl Enable IP Used = No

AND: track Anding
AND 1 XR Used = Yes
AND 2 Used = Yes No
AND 3 Used = No
AND 4 Used = No
AND 5 Used = No
AND 6 Used = No
AND 7 Used = No
AND 8 Used = No

AND: AND 1 XR
AND 1 XR Track 1 = Prime
AND 1 XR Track 2 = Prime
AND 1 Enable Used = Yes
And 1 Enable Pickup = 0 sec
AND 1 Enable Drop = 0 sec
AND 1 Wrap Used = No

ADVANCED: MS restart
MS/GCP Restart Used = No

ADVANCED: out of service
OOS Control = OOS IPs

ADVANCED: out of service 2
T1 OOS Control = OOS Input 1
T2 OOS Control = OOS Input 1
T1 OOS Controls = GCP and Island
T2 OOS Controls = GCP Only

ADVANCED: track wrap circuits
Wrap LOS Timer = 5 sec
Track 1 Wrap Used = No
Track 2 Wrap Used = No

ADVANCED: trk 1 overrides
Track 1 : All Predictors Override Used = No

ADVANCED: trk 2 overrides
Track 2 : All Predictors Override Used = No

ADVANCED: OR logic
OR 1 Used = No
OR 2 Used = No
OR 3 Used = No
OR 4 Used = No

ADVANCED: Internal I/O 1
Pass Thrus = Yes
Int.1 Sets = AND 2 Enable
Int.1 Set by = Passthru State 1
Int.2 Sets = AND 2 Enable
Int.2 Set by = Passthru State 2
Int.3 Sets = GD 1.1
Int.3 Set by = Passthru State 1
Int.4 Sets = GD 2.1
Int.4 Set by = Passthru State 2

ADVANCED: Internal I/O 2
Int.5 Sets = AND 2 Enable Not Used
Int.5 Set by = Passthru State 3 Not Used
Int.6 Sets = AND 2 Enable Not Used
Int.6 Set by = Passthru State 4 Not Used
Int.7 Sets = GD 1.2 Not Used
Int.7 Set by = Passthru State 3 Not Used
Int.4 Sets = GD 2.2 Not Used
Int.4 Set by = Passthru State 4 Not Used

ADVANCED: Internal I/O 3
Int.9 Sets = Not Used
Int.9 Set by = Not Used
Int.10 Sets = Not Used
Int.10 Set by = Not Used
Int.11 Sets = Not Used
Int.11 Set by = Not Used
Int.12 Sets = Not Used
Int.12 Set by = Not Used

ADVANCED: Internal I/O 4
Int.13 Sets = Not Used
Int.13 Set by = Not Used
Int.14 Sets = Not Used
Int.14 Set by = Not Used
Int.15 Sets = Not Used
Int.15 Set by = Not Used
Int.16 Sets = Not Used
Int.16 Set by = Not Used

ADVANCED: site options
Daylight Savings = On
Units = Standard
Maint Call Rpt IP Used = No
Emergency Activate IP = No
EZ/EX Logging = Change
EZ/EX Point Change = 3

SSCC
Gates Used = Yes
SSCC1+2 GPs Coupled = Yes
Min Activation = 21 sec
Rmt Activation Cancel = 3 min
Bell On Gate Rising = No
Mute Bell On Gate Down = Yes
SSCCIV Controller Used = No

SSCC: 1
SSCC-1 Activation = AND 1 XR
SSCC-1 Gate Delay = 4 sec
SSCC-1 Number of GPs = 1
SSCC-1 Number of GDs = 2 1
SSCC 1 : Flash Rate = 60
SSCC 1 : Low Battery Detection = No
SSCC 1 : Flash Sync = master
SSCC 1 : Invert Gate Output = No
SSCC 1 : Lamp Neutral Test = Off
Aux-1 Xng Ctrl Used = No

SSCC: 2
SSCC-2 Activation = AND 1 XR
SSCC-2 Gate Delay = 4 sec
SSCC-2 Number of GPs = 0
SSCC-2 Number of GDs = 2 1
SSCC 2 : Flash Rate = 60
SSCC 2 : Low Battery Detection = No
SSCC 2 : Flash Sync = slave
SSCC 2 : Invert Gate Output = No
SSCC 2 : Lamp Neutral Test = Off
Aux-2 Xng Ctrl Used = No

OUTPUT: assignment page 1
OUT 1.1 = AND 1 XR
OUT 1.2 = AND 2
OUT 2.1 = Not Used
OUT 2.2 = Not Used

INPUT: assignment page 1
IN 1.1 = Passthru State 3 (OCCN) Not Used
IN 1.2 = Not Used
IN 2.1 = Passthru State 4 (OCCN) Not Used
IN 2.2 = Not Used

IO: assignment SSCC
OUT GC 1 = Gate Output 1
OUT GC 2 = Gate Output 2
IN 7.1 = AND 1 XR Enable
IN 7.2 = Not Used
IN 7.3 = Not Used
IN 7.4 = GD 1.1
IN 7.5 = GP 1.1
IN 8.1 = Out Of Service IP 1
IN 8.2 = Not Used
IN 8.3 = Not Used
IN 8.4 = GD 2.1
IN 8.5 = Not Used

SEAR
SEAR Subnode = 99
DI 1 = General1
DI 2 = Gnd Flt Tester 1
Rly 1 = Ground Fault Test
Rly 2 = AC Control

SEAR: Inputs
SP 2.1 = POK 1
SP 3.1 = Not Used
SP 4.1 = Not Used
SP 5.1 = Not Used
SP 6.1 = Not Used

SEAR: slot 1-4 Inputs
IN 1.1 = Not Used
IN 1.2 = Not Used
IN 2.1 = Not Used
IN 2.2 = POK 2
IN 3.1 = Not Used
IN 3.2 = Not Used
IN 4.1 = Not Used
IN 4.2 = Not Used

SEAR: Inputs slot 5
IN 5.1 = Not Used
IN 5.2 = Not Used

SEAR: Inputs slot 6
IN 6.1 = Not Used
IN 6.2 = Not Used

SEAR: slot 7-8 Inputs
IN 7.2 = TSS 5 Not Used
IN 7.3 = TSS 1
IN 8.2 = TSS 6 Not Used
IN 8.3 = TSS 2
IN 8.5 = General2

SITE: programming
Radio Subnode = 1
Field Password = Off
Low Battery Enabled = Off

Configuration Package File

Filename: fre-069.45.pac

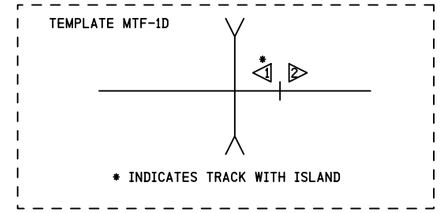

NOTES:

1) DISTANCE(S) TO BE VERIFIED AT INSTALLATION.
INDICATE SELECTED PROGRAMMED VALUE IF DIFFERENT THAN SHOWN.
REFER TO 4000 GCP INSTRUCTION/INSTALLATION MANUAL
FOR PROGRAMMING PARAMETERS.

2) PROGRAM TEXT HIGHLITED IN RED INDICATES 4000 PROGRAM
MODIFICATIONS TO DEFAULT PROGRAM VALUES.

3) EACH CONSTANT WARNING DEVICE SYSTEM TO BE PROGRAMMED TO
CONVERT TO A MOTION SENSOR 300 FEET FROM EDGE OF ROAD
TRAVELLED WAY.
SHUNT TRACK 300 FEET FROM EDGE OF ROAD TRAVELLED WAY
AND NOTE "EZ" VALUE.
PROGRAM EACH SYSTEM WITH THE INDICATED "EZ" VALUE +2.

4) VERIFY SET TIMER VALUE TO MATCH ACTUAL TRAIN MOVEMENT
WITHIN THE CROSSING APPROACH CIRCUITS.

SII 04 JUN 2014

PROPOSED
DESIGN NO. 13-0125
RED-IN YELLOW-OUT

AS INSTALLED
DATE _____
BY _____
(PRINT NAME)

PHASE 3

PROPOSED D	M	Y	REVISIONS	D	C	COMPLETED D	M	Y	C
			AS INSTALLED			06	04	14	NAD
04	06	14	3 PH DIVIDED HIGHWAY	NAD	MRB				

REGION SOUTHERN
SUB. FREEPORT 382
CN

SIGNALS AND COMMUNICATIONS HOMEWOOD
12 JANUARY 2010
DES. SP
CH. MKN

GCP 4000
PROGRAM INFORMATION
IL ROUTE 25
SOUTH ELGIN, IL

FRE-038.15-15P3

DOT# 289 905B

SIEMENS INDUSTRY INC

DES.: NAD	DATE: 04/06/14	JOB NO.: PICA10521	
CKD.: MRB	ISSUE DATE: N/A	EST. NO.: XP-7370	
DRN.: NAD	PLAN NO.: N/A	SHEET 15 OF 17	
P TIME: 08:00	P DATE: 14-JUL-2014	CAD ID.: FRE-038.15-15	

SIEMENS INDUSTRY INC
LOUISVILLE DIVISION, LOUISVILLE, KY

fre-038.15-15p3.dgn
14-JUL-2014

REVISIONS				
NO.	DATE	BY	DESCRIPTION	APP. BY
1				
2				
3				
4				
5				

TO CONFIGURE SEARII & SEARIII PRESS SITE SETUP KEY. USE ARROW KEYS TO MAKE SELECTION, PRESS ENTER AFTER SELECTION HAS BEEN MADE.

STAGE 1

PROGRAM MENU QUESTIONS	PROGRAM	OPTIONS/RANGE
DATE/TIME?	CURRENT DATE/TIME	CURRENT DATE/TIME
AUTOMATIC DST ADJUSTMENT?	YES	YES, NO
TIME ZONE?	CENTRAL	EASTERN, CENTRAL, MOUNTAIN, PACIFIC, ALASKA, HAWAII, ATLANTIC, SASKATCHEWAN, NEW FOUNLAND
SITE NAME?	IL RTE 25	STREET NAME
MILE POST?	38.15	MILEAGE
DOT/CROSSING IS #?	289 905B	
TESTER TYPE?	CROSSING	CROSSING, WAYSIDE
DATE FORMAT?	dd-mm-yyyy	mm-dd-yyyy, dd-mm-yyyy
TEMPERATURE FORMAT?	CELSIUS	FAHRENHEIT, CELSIUS
INDICATE HOLD?	0	SECONDS
SITE TYPE?		NO COM, BULLHORN, DIALUP, NODE, COLLECTOR
SITE ATCS ADDRESS?		7.RRR.LLL.GGG.99.01
OFFICE ATCS ADDRESS?		2.RRR.NN.DDDD
PRIMARY HOP ADDR? (FOR NODE USE)		7.RRR.LLL.GGG.00.01
BACKUP HOP ADDR1? (FOR NODE USE)		7.RRR.LLL.GGG.00.01
BACKUP HOP ADDR2? (FOR NODE USE)		7.RRR.LLL.GGG.00.01
POLL ID? (FOR COLLECTOR USE)		1-99
MODE? (FOR COLLECTOR USE)		GEN/ATCS, GENISYS
WAMS/XID? (FOR COLLECTOR USE)		ENABLED, DISABLE
OFFICE COMM. DEVICE? (FOR COLLECTOR USE)		DIRECT (RS232) MCM (RS232) MCM (ECHELON) SREAD SPEC (ECHELON) DIAL MODEM (RS232) S200 RADIO (RS422)
OFFICE PHONE NUMBER? (FOR COLLECTOR USE)		PHONE NUMBER OF WAMS
INIT STRING? (FOR COLLECTOR USE)		OPTIONAL HAYES MODEM INITIALIZATION STRING
FIELD COMM. DEVICE?		VHF COMM. (ECHELON) VHF COMM. (RS232) SPREAD SPEC (ECHELON) SPREAD SPEC (RS232)
USER PORT?	57600, 8, N, 1, N	BAUD, DATA BITS, PARITY, STOP BITS, FLOW CONTROL
AUX PORT?	9600, 8, N, 1, N	BAUD, DATA BITS, PARITY, STOP BITS, FLOW CONTROL

YOU WILL NOW SEE A MESSAGE "PLEASE WAIT COMPILING STAGE 1"
CONTINUE TO NEXT PROGRAM MENU QUESTIONS.

STAGE 2

QUESTION	PROGRAM	SELECTION 1 (MINIMUM)	SELECTION 2 (MAXIMUM)	CONDITION FOR MENU DISPLAY
RESET NAMES / MODULES ?	NO	YES	NO	ALWAYS
RAILROAD NUMBER ?	360	1	999	ALWAYS
CROSSING CONFIGURATION ?	NORMAL	NORMAL	SPLIT GATE (NOTE 3)	ALWAYS
ENTRANCE GATES ?	4 2	0	8	ALWAYS
GATE POSTION FAIL TIME (SECONDS) ?	11	10	60	GATES > 0
BATTERY BANKS ?	3	1	3	ALWAYS
BATT MON USED ?	YES	NO	YES	ALWAYS
INTERNAL CROSSING CONTROLLERS ?	2	0	2	ALWAYS
EXTERNAL CROSSING CONTROLLERS ?	0	0	2	CROSSING CONTROLLER = YES
VHF COMMUNICATOR ?	YES	YES	NO	ALWAYS
ALLOW DTMF CONTROL ?	NO	NO	YES	RAILROAD = 306 (IC)
DIGIT #1 ?	N/A	0	9	ALLOW DTMF CONTROL = YES
DIGIT #2 ?	N/A	0	9	ALLOW DTMF CONTROL = YES
DIGIT #3 ?	N/A	0	9	ALLOW DTMF CONTROL = YES
DIGIT #4 ?	N/A	0	9	ALLOW DTMF CONTROL = YES
DIGIT #5 ?	N/A	0	9	ALLOW DTMF CONTROL = YES
DTMF TIME-OUT ?	180 (NOTE 2)	30	240	ALLOW DTMF CONTROL = YES
DTMF OUTPUT 2 DELAY ?	0	0	20	ALLOW DTMF CONTROL = YES
ILOD MODULES ?	2	0	4	ALWAYS
ANY LED BULBS USED ?	YES	NO	YES	ILOD MODULES > 0
AUTO INSPECTION ?	NO	YES	NO	ALWAYS
BELL SENSORS ?	2 1	0	8	ALWAYS
BELL SENSORS TSS1 ?	YES	NO	YES	BELL SENSORS > 0
BELL SENSORS TSS2 ?	YES NO	NO	YES	BELL SENSORS > 0
BELL SENSORS TSS3 ?	NO	NO	YES	BELL SENSORS > 0

STAGE 2 CONT'D

QUESTION	PROGRAM	SELECTION 1 (MINIMUM)	SELECTION 2 (MAXIMUM)	CONDITION FOR MENU DISPLAY
BELL SENSORS TSS4 ?	NO	NO	YES	BELL SENSORS > 0
BELL SENSORS TSS5 ?	NO	NO	YES	BELL SENSORS > 0
BELL SENSORS TSS6 ?	NO	NO	YES	BELL SENSORS > 0
BELL SENSORS TSS7 ?	NO	NO	YES	BELL SENSORS > 0
BELL SENSORS TSS8 ?	NO	NO	YES	BELL SENSORS > 0
BELL ON ?	GATES LOWERING	GATES LOWERING		BELL SENSORS > 0
		GATES MOVING		
		ALWAYS		
GFT'S ?	YES	YES	NO	ALWAYS
BATTERIES ON GFT1 ?	2	1	2	GFT'S = YES
GATE TIP SENSORS ?	NO	YES	NO	GATES > 0
RTU ?	NO	NO	YES	ALWAYS
VHF VOICE CHANNEL ?	1 (NOTE 2)	1	8	VHF COMMUNICATOR = YES
VHF DATA CHANNEL ?	1 (NOTE 2)	1	8	VHF COMMUNICATOR = YES
USE CELL MODEM NON-CRITICAL FEATURE ?	NO	NO	YES	ALWAYS
FULL APPROACH MOVE ALARMS ?	ACTIVATE	ACTIVATE		ALWAYS
		DO NOT ACTIVATE		

YOU WILL NOW SEE A MESSAGE "PLEASE WAIT COMPILING STAGE 2"
CONTINUE TO NEXT PROGRAM MENU QUESTIONS.

STAGE 3

PROGRAM MENU QUESTIONS	PROGRAM
EDIT DIGITAL INPUTS	NO
EDIT BATTERIES	NO
EDIT RELAYS	NO
EDIT TEST LEDS	NO
EDIT ILOD SENSORS	NO
EDIT VHF SETTINGS	NO
GCP4K ATCS SUBNODE?	16

SAVE CONFIGURATION

PHASE 3

SII 04 JUN 2014

PROPOSED
DESIGN NO. 13-0125
RED-IN YELLOW-OUT

AS INSTALLED
DATE _____
BY _____
(PRINT NAME)

NOTES:

1) ASSIGNED DTMF CODES:
ACTIVATE CROSSING (NORTH TRACK - T1) N/A 11#
DE-ACTIVATE CROSSING (NORTH TRACK - T1) N/A 10#
ACTIVATE CROSSING (SOUTH TRACK - T2) N/A 21#
DE-ACTIVATE CROSSING (SOUTH TRACK - T2) N/A 20#
ACTIVATE CROSSING (MAINTENANCE) N/A 31#
DE-ACTIVATE CROSSING (MAINTENANCE) N/A 30#

2) INDICATE SELECTION IN SPACE PROVIDED.

3) ADDITIONAL OPTIONS: DUAL CROSSING, EXTERNAL ENTRANCE GATE CONTROLLERS.

SEARII EXECUTIVE 9V725 REV. A01U, SEARII APPLICATION 9V864 REV. A01J

PROPOSED D	PROPOSED M	PROPOSED Y	REVISIONS	D	C	COMPLETED D	COMPLETED M	COMPLETED Y	C
			AS INSTALLED			06	04	14	NAD
04	06	14	3 PH DIVIDED HIGHWAY	NAD	MRB				

REGION SOUTHERN
SUB. FREEPORT 382
SIGNALS AND COMMUNICATIONS HOMEWOOD
DES. SP
12 JANUARY 2010
CH. MKN
GCP 4000/SEAR III
SETUP AND PROGRAM
IL ROUTE 25
SOUTH ELGIN, IL
FRE-038.15-16P3

DOT# 289 905B

SIEMENS INDUSTRY INC
DES.: NAD
CKD.: MRB
DRN.: NAD
P. TIME: 08:00
DATE: 04/06/14
ISSUE DATE: N/A
PLAN NO.: N/A
P. DATE: 14-JUL-2014
JOB NO.: PICA10521
EST. NO.: XP-7370
SHEET 16 OF 17
CAD ID.: FRE-038.15-16P3

SIEMENS INDUSTRY INC
LOUISVILLE DIVISION, LOUISVILLE, KY

fre-038.15-16ph3.dgn
14-JUL-2014

REVISIONS			
NO.	DATE	BY	DESCRIPTION	APP. BY
1				
2				
3				
4				
5				

CALIBRATION HISTORY

INITIAL SET UP BY: _____ DATE: _____

DC VOLTAGE READINGS AFTER CALIBRATION				CALIBRATION HISTORY										LINEARIZATION HISTORY (NOTE 1)							
				EZ/EX VALUES (TRACK UNOCCUPIED)				HARD WIRE SHUNT AT TERMINATION SHUNT						HARD WIRE SHUNT AT 50 PERCENT POINT OF SHUNT							
				EZ		EX		EZ		EX		50 PERCENT OF EZ VALUE		NO LINEARIZATION				LINEARIZATION COMPLETE			
														EZ		EX		STEP±		EZ	
				NRML	STBY	NRML	STBY	NRML	STBY	NRML	STBY	NRML	STBY	NRML	STBY	NRML	STBY	NRML	STBY	NRML	STBY
T1	Z1=	WEST	TRACK 1	N/A	N/A	N/A	N/A	N/A	N/A	N/A	N/A	N/A	N/A	N/A	N/A	N/A	N/A	N/A	N/A	N/A	N/A
	Z2=	EAST	TRACK 1																		
T2	Z1=	WEST	TRACK 2																		
	Z2=	EAST	TRACK 2	N/A	N/A	N/A	N/A	N/A	N/A	N/A	N/A	N/A	N/A	N/A	N/A	N/A	N/A	N/A	N/A	N/A	N/A

CALIBRATION HISTORY

INITIAL SET UP BY: _____ DATE: _____

DC VOLTAGE READINGS AFTER CALIBRATION				CALIBRATION HISTORY										LINEARIZATION HISTORY (NOTE 1)							
				EZ/EX VALUES (TRACK UNOCCUPIED)				HARD WIRE SHUNT AT TERMINATION SHUNT						HARD WIRE SHUNT AT 50 PERCENT POINT OF SHUNT							
				EZ		EX		EZ		EX		50 PERCENT OF EZ VALUE		NO LINEARIZATION				LINEARIZATION COMPLETE			
														EZ		EX		STEP±		EZ	
				NRML	STBY	NRML	STBY	NRML	STBY	NRML	STBY	NRML	STBY	NRML	STBY	NRML	STBY	NRML	STBY	NRML	STBY
T1	Z1=	WEST	TRACK 1	N/A	N/A	N/A	N/A	N/A	N/A	N/A	N/A	N/A	N/A	N/A	N/A	N/A	N/A	N/A	N/A	N/A	N/A
	Z2=	EAST	TRACK 1																		
T2	Z1=	WEST	TRACK 2																		
	Z2=	EAST	TRACK 2	N/A	N/A	N/A	N/A	N/A	N/A	N/A	N/A	N/A	N/A	N/A	N/A	N/A	N/A	N/A	N/A	N/A	N/A

CALIBRATION HISTORY

INITIAL SET UP BY: _____ DATE: _____

DC VOLTAGE READINGS AFTER CALIBRATION				CALIBRATION HISTORY										LINEARIZATION HISTORY (NOTE 1)							
				EZ/EX VALUES (TRACK UNOCCUPIED)				HARD WIRE SHUNT AT TERMINATION SHUNT						HARD WIRE SHUNT AT 50 PERCENT POINT OF SHUNT							
				EZ		EX		EZ		EX		50 PERCENT OF EZ VALUE		NO LINEARIZATION				LINEARIZATION COMPLETE			
														EZ		EX		STEP±		EZ	
				NRML	STBY	NRML	STBY	NRML	STBY	NRML	STBY	NRML	STBY	NRML	STBY	NRML	STBY	NRML	STBY	NRML	STBY
T1	Z1=	WEST	TRACK 1	N/A	N/A	N/A	N/A	N/A	N/A	N/A	N/A	N/A	N/A	N/A	N/A	N/A	N/A	N/A	N/A	N/A	N/A
	Z2=	EAST	TRACK 1																		
T2	Z1=	WEST	TRACK 2																		
	Z2=	EAST	TRACK 2	N/A	N/A	N/A	N/A	N/A	N/A	N/A	N/A	N/A	N/A	N/A	N/A	N/A	N/A	N/A	N/A	N/A	N/A

NOTE:

1) **SET UP APPROACH LENGTH AND LINEARIZATION CALIBRATION**
VERIFY THAT "ENHANCED DETECTION" MODE IS PROGRAMMED "OFF" BEFORE ATTEMPTING LINEARIZATION PROCEDURES.

SIEMENS INDUSTRY INC	
DES.: NAD	DATE: 04/06/14	JOB NO.: PICA10521
CKD.: MRB	ISSUE DATE: N/A	EST. NO.: XP-7370
DRN.: NAD	PLAN NO.: N/A	SHEET 17 OF 17
P. TIME: 08:00	P. DATE: 14-JUL-2014	CAD ID.: FRE-038.15-17

PROPOSED D	M	Y	REVISIONS	D	C	COMPLETED D	M	Y	C
			AS INSTALLED			06	04	14	NAD

REGION SOUTHERN
SUB. FREEPORT 382

SIGNALS AND COMMUNICATIONS HOMEWOOD
12 JANUARY 2010
DES. SP
CH. MKN

GCP 4000
CALIBRATION HISTORY
IL ROUTE 25
SOUTH ELGIN, IL

FRE-038.15-17

DOT# 289 905B

20

SIEMENS INDUSTRY INC
LOUISVILLE DIVISION, LOUISVILLE, KY

fre-038.15-17.dgn
14-JUL-2014