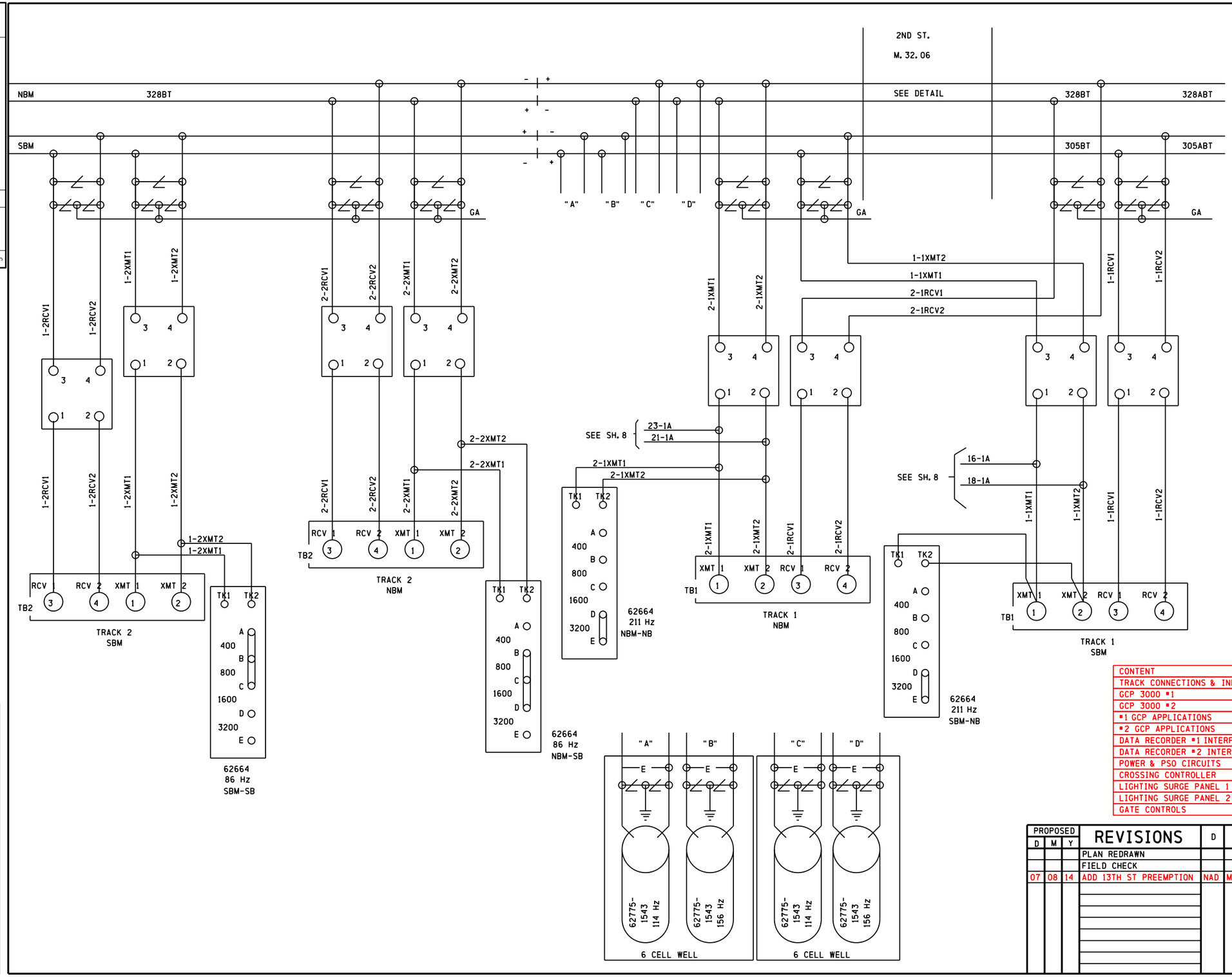


SII 07 AUG 2014

**PROPOSED**
DESIGN NO. 13-0463
RED-IN YELLOW-OUT

**AS INSTALLED**
DATE _____
BY _____
(PRINT NAME)

| CONTENT | SHEET NO. |
|---|---|
| TRACK CONNECTIONS & INDEX | 01 |
| GCP 3000 #1 | 02 |
| GCP 3000 #2 | 03 |
| #1 GCP APPLICATIONS | 04 |
| #2 GCP APPLICATIONS | 05 |
| DATA RECORDER #1 INTERFACE NBM | 06 |
| DATA RECORDER #2 INTERFACE SBM | 07 |
| POWER & PSO CIRCUITS | 08 |
| CROSSING CONTROLLER | 09 |
| LIGHTING SURGE PANEL 1 | 10 |
| LIGHTING SURGE PANEL 2 | 11 |
| GATE CONTROLS | 12 |

| PROPOSED D | M | Y | REVISIONS | D | C | COMPLETED D | M | Y | C |
|---|---|---|---|---|---|---|---|---|---|
| | | | PLAN REDRAWN | | | 07 | 08 | 14 | NAD |
| | | | FIELD CHECK | | | 07 | 08 | 14 | SII |
| 07 | 08 | 14 | ADD 13TH ST PREEMPTION | NAD | MRB | | | | |

REGION SOUTHERN
SUB. JOLIET 350
CN

SIGNALS AND COMMUNICATIONS HOMEWOOD
DES. WJL
04 DECEMBER 1997
CH.

TRACK CONNECTIONS
& INDEX
LOCKPORT, IL
2ND STREET

JOL-032.06-01

DOT# 289 749S

12

SIEMENS INDUSTRY INC
DES.: NAD | DATE: 07/08/14 | JOB NO.: PIC410535
CKD.: MRB | ISSUE DATE: N/A | EST. NO.: UXXD04361
DRN.: NAD | PLAN NO.: N/A | SHEET 1 OF 12
P TIME: 15:57 | P DATE: $$PLOT_DATE | CAD ID.: JOL-032.06-01

SIEMENS INDUSTRY INC
LOUISVILLE DIVISION, LOUISVILLE, KY

| REVISIONS NO. | DATE | BY | DESCRIPTION | APP. BY |
|---|---|---|---|---|
| 1 | | | | |
| 2 | | | | |
| 3 | | | | |
| 4 | | | | |
| 5 | | | | |

JOL-032.06-01.dgn
02-SEP-2014

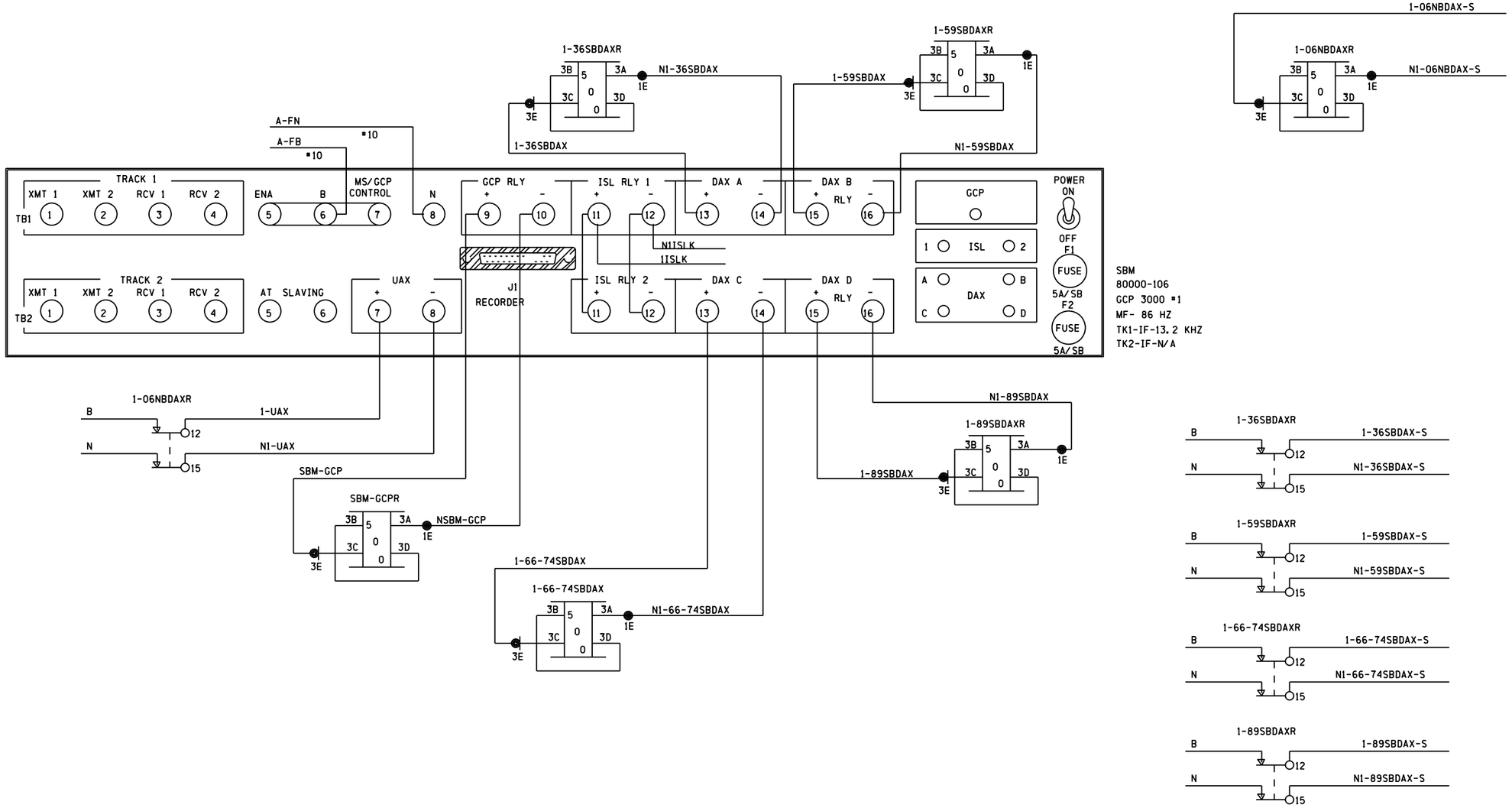


SBM
80000-106
GCP 3000 *1
MF- 86 HZ
TK1-IF-13.2 KHZ
TK2-IF-N/A

NOTE
1) ALL WIRING *16 AWG UNLESS OTHERWISE NOTED

| REVISIONS | | | |
|---|---|---|---|
| NO. | DATE | BY | DESCRIPTION | APP. BY |
| 1 | | | | |
| 2 | | | | |
| 3 | | | | |
| 4 | | | | |
| 5 | | | | |

| SIEMENS INDUSTRY INC | | | |
|---|---|---|---|
| DES.: NAD | DATE: 07/08/14 | JOB NO.: PICA10535 | |
| CKD.: MRB | ISSUE DATE: N/A | EST. NO.: JXXD04361 | |
| DRN.: NAD | PLAN NO.: N/A | SHEET 2 OF 12 | |
| P TIME: 15:57 | P DATE: $$PLOT_DATE | CAD ID.: JOL-032.06-02 | |

| PROPOSED | | | REVISIONS | D | C | COMPLETED | | | C |
|---|---|---|---|---|---|---|---|---|---|
| D | M | Y | | | | D | M | Y | |
| | | | PLAN REDRAWN | | | 07 | 08 | 14 | NAD |
| | | | FIELD CHECK | | | 07 | 08 | 14 | SII |

REGION SOUTHERN
SUB. JOLIET 350
SIGNALS AND COMMUNICATIONS HOMEWOOD
DES. WJL
04 DECEMBER 1997
CH.
GCP 3000 *1
LOCKPORT, IL
2ND STREET
JOL-032.06-02
DOT# 289 749S

SIEMENS INDUSTRY INC
LOUISVILLE DIVISION, LOUISVILLE, KY

JOL-032.06-02.dgn
02-SEP-2014

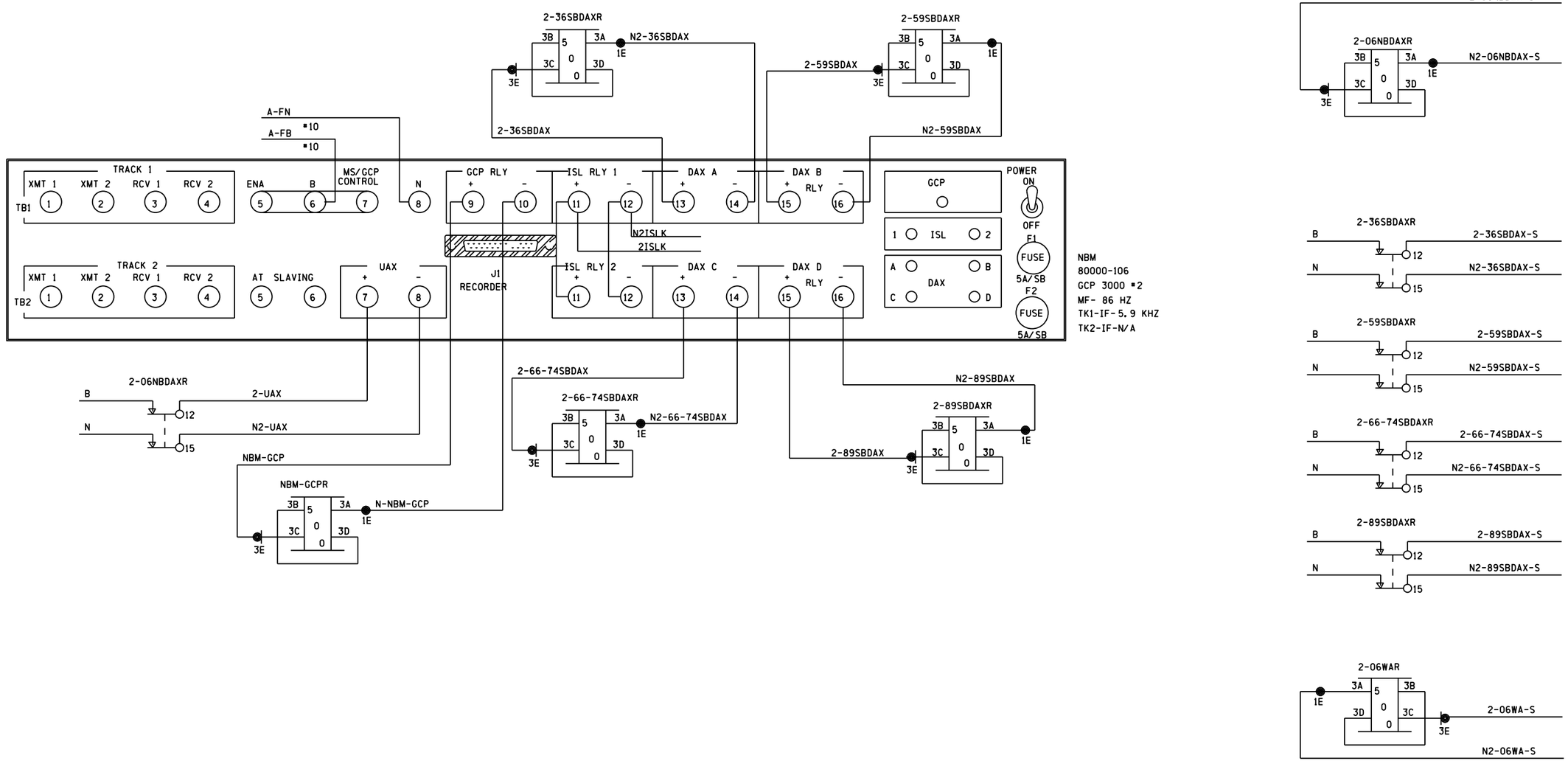


NOTE
1) ALL WIRING #16 AWG UNLESS OTHERWISE NOTED

| REVISIONS | | | | | |
|---|---|---|---|---|---|
| NO. | DATE | BY | DESCRIPTION | APP. BY | |
| 1 | | | | | |
| 2 | | | | | |
| 3 | | | | | |
| 4 | | | | | |
| 5 | | | | | |

SIEMENS INDUSTRY INC

| | | | |
|---|---|---|---|
| DES.: NAD | DATE: 07/08/14 | JOB NO.: PICA10535 | |
| CKD.: MRB | ISSUE DATE: N/A | EST. NO.: UXXD04361 | |
| DRN.: NAD | PLAN NO.: N/A | SHEET 3 OF 12 | |
| P TIME: 15:57 | P DATE: $$PLOT_DATE | CAD ID.: JOL-032.06-03 | |

| PROPOSED D | M | Y | REVISIONS | D | C | COMPLETED D | M | Y | C |
|---|---|---|---|---|---|---|---|---|---|
| | | | PLAN REDRAWN | | | 07 | 08 | 14 | NAD |
| | | | FIELD CHECK | | | 07 | 08 | 14 | SII |

REGION SOUTHERN
SUB. JOLIET 350

SIGNALS AND COMMUNICATIONS HOMEWOOD
DES. WJL
04 DECEMBER 1997
CH.
GCP 3000 *2
LOCKPORT, IL
2ND STREET
JOL-032.06-03
DOT# 289 749S

SIEMENS INDUSTRY INC
LOUISVILLE DIVISION, LOUISVILLE, KY

JOL-032.06-03.dgn
02-SEP-2014

| REVISIONS | | | | |
|---|---|---|---|---|
| NO. | DATE | BY | DESCRIPTION | APP. BY |
| 1 | | | | |
| 2 | | | | |
| 3 | | | | |
| 4 | | | | |
| 5 | | | | |

## ■ PRESS PROGRAM KEY

| N | S | | | |
|---|---|---|---|---|
| ☐ | ☐ | NUMBER OF TRACKS (TRANSCEIVER MODULES) | 1 ☐ | 2 ■ |
| ☐ | ☐ | FREQUENCY (MS/GCP) | T1: 211 | Hz |
| | | | T2: 86 | Hz |
| ☐ | ☐ | UNIDIRECTIONAL/BIDIRECTIONAL | T1: UNI ☐ | BI ■ |
| | | | T2: UNI ☐ | BI ■ |
| ☐ | ☐ | XMIT LEVEL | T1: MAX ☐ | MED ■ |
| | | | T2: MAX ■ | MED ☐ |
| ☐ | ☐ | PREDICTOR/MOTION SENSOR | T1: PRED ■ | MS ☐ |
| | | | T2: PRED ■ | MS ☐ |
| ☐ | ☐ | WARNING TIME SELECTED | T1: 35 | SEC. |
| | | | T2: 35 | SEC. |
| ☐ | ☐ | APPROACH DISTANCE SELECTED (NOTES 2, 4 & 6) | T1: 4295 | FT. |
| | | | T2: 4265 | FT. |
| | | APPROACH DISTANCE COMPUTED (NOTES 1, 4, 6 & 9) | T1: 4372 (NORMAL) | ____ (STANDBY) FT. |
| | | | T2: 4365 (NORMAL) | ____ (STANDBY) FT. |
| ☐ | ☐ | UAX PICKUP DELAY (UAX 1) (0 = OFF) | 25 22 | SEC. |
| ☐ | ☐ | ENA / UAX2 DELAY (0 = ENA) | 0 | SEC. |
| ☐ | ☐ | ISLAND DISTANCE (BETWEEN ISLAND TRACK WIRE CONNECTIONS) (NOTES 2, 4 & 6) | T1: 120 | FT. |
| | | | T2: N/A | FT. |
| ☐ | ☐ | NUMBER OF DAXS | 0 ☐ 1 ☐ 2 ☐ 3 ☐ 4 ■ | |
| ☐ | ☐ | DAX A TRACK ASSIGNMENT | T1 ☐ | T2 ■ |
| ☐ | ☐ | DAX A DISTANCE (0 = PREEMPT) (NOTES 2, 4 & 6) | 1522 | FT. |
| ☐ | ☐ | DAX A WARNING TIME | 35 | SEC. |

## ■ PRESS PROGRAM KEY

| N | S | | | |
|---|---|---|---|---|
| ☐ | ☐ | DAX B TRACK ASSIGNMENT | T1 ☐ | T2 ■ |
| ☐ | ☐ | DAX B DISTANCE (0 = PREEMPT) (NOTES 2, 4 & 6) | 2000 | FT. |
| ☐ | ☐ | DAX B WARNING TIME | 42 | SEC. |
| ☐ | ☐ | DAX C TRACK ASSIGNMENT | T1 ☐ | T2 ■ |
| ☐ | ☐ | DAX C DISTANCE (0 = PREEMPT) (NOTES 2, 4 & 6) | 3093 | FT. |
| ☐ | ☐ | DAX C WARNING TIME | 35 | SEC. |
| ☐ | ☐ | DAX D TRACK ASSIGNMENT | T1 ☐ | T2 ■ |
| ☐ | ☐ | DAX D DISTANCE (0 = PREEMPT) (NOTES 2, 4 & 6) | 4283 4340 | FT. |
| ☐ | ☐ | DAX D WARNING TIME | 35 46 | SEC. |
| ☐ | ☐ | SLAVING MASTER/SLAVE | MASTER ■ | SLAVE ☐ |
| ☐ | ☐ | PASSWORD ENABLED | DISABLED ☐ | |
| | | | ENABLED ■ | |
| ☐ | ☐ | RECORDER INSTALLED (NOTE 11) | NOT INSTALLED ■ | |
| | | | INSTALLED ☐ | |
| | | EXTERNAL NODE # (NOTE 11) | ____ (NORMAL) | ____ (STANDBY) |
| ☐ | ☐ | RS-232-C BAUD RATE | 9600 | BPS |
| ☐ | ☐ | RS-232-C DATA BITS | 7 ☐ | 8 ■ |
| ☐ | ☐ | RS-232-C STOP BITS | 1 ■ | 2 ☐ |
| ☐ | ☐ | RS-232-C PARITY | NONE ■ | MARK ☐ |
| | | | ODD ☐ | SPACE ☐ |
| | | | EVEN ☐ | |
| ☐ | ☐ | DATE (E.G., MON 16 NOV 1987) (NOTE 2) | ____ | |
| ☐ | ☐ | TIME (E.G., 11:25:43 AM) (NOTE 2) | ____ | |
| ☐ | ☐ | DAYLIGHT SAVINGS | ON ■ | OFF ☐ |

## ■ PRESS FUNCTION KEY

| N | S | | | |
|---|---|---|---|---|
| ☐ | ☐ | SWITCH TO MS (ENTER EZ VALUE) (NOTES 2, 4 & 5) | T1: 10 | EZ |
| | | | T2: 10 | EZ |
| ☐ | ☐ | TRANSFER DELAY MS TO GCP (0 = OFF) | T1: 0 | SEC. |
| | | | T2: 0 | SEC. |
| ☐ | ☐ | TRANSFER MS TO GCP PRIME (WHEN PRIME PREDICTION OFFSET IS ON) | T1: ON ☐ | OFF ■ |
| | | | T2: ON ☐ | OFF ■ |
| ☐ | ☐ | TRANSFER MS TO GCP DAX A | T1: ON ☐ | OFF ■ |
| | | | T2: ON ☐ | OFF ■ |
| ☐ | ☐ | TRANSFER MS TO GCP DAX B | T1: ON ☐ | OFF ■ |
| | | | T2: ON ☐ | OFF ■ |
| ☐ | ☐ | TRANSFER MS TO GCP DAX C | T1: ON ☐ | OFF ■ |
| | | | T2: ON ☐ | OFF ■ |
| ☐ | ☐ | TRANSFER MS TO GCP DAX D | T1: ON ☐ | OFF ■ |
| | | | T2: ON ☐ | OFF ■ |
| ☐ | ☐ | PRIME PREDICTION OFFSET (0 = OFF) (NOTES 2, 4 & 6) | T1: ____ | FT. |
| | | | T2: ____ | FT. |
| ☐ | ☐ | PICKUP DELAY PRIME | AUTOMATIC ☐ FIXED ■ | 15 SEC. |
| ☐ | ☐ | PICKUP DELAY DAX A | AUTOMATIC ☐ FIXED ■ | 15 SEC. |
| ☐ | ☐ | PICKUP DELAY DAX B | AUTOMATIC ☐ FIXED ■ | 15 SEC. |
| ☐ | ☐ | PICKUP DELAY DAX C | AUTOMATIC ☐ FIXED ■ | 15 SEC. |
| ☐ | ☐ | PICKUP DELAY DAX D | AUTOMATIC ■ FIXED ■ | 15 8 SEC. |
| ☐ | ☐ | COMPENSATION VALUE (NOTES 3 & 4) | T1: ____ (NORMAL) | ____ (STANDBY) |
| ☐ | ☐ | COMPENSATION VALUE (NOTES 3 & 4) | T2: ____ (NORMAL) | ____ (STANDBY) |

EXPANDED PROGRAMMING

## ■ PRESS FUNCTION KEY

| N | S | | | |
|---|---|---|---|---|
| ☐ | ☐ | ENHANCED DETECTION (ED) (NOTES 6 & 9) | T1: ON ■ | OFF ☐ |
| | | | T2: ON ■ | OFF ☐ |
| ☐ | ☐ | BACK TO BACK T1 & T2 (WHEN ED DETECTION IS ON) | NO ☐ | YES ■ |
| ☐ | ☐ | STATION STOP TIMER (WHEN ENHANCED DETECTION IS ON) | T1: N/A | SEC. |
| | | | T2: N/A | SEC. |
| ☐ | ☐ | NUMBER OF TRACK WIRES | T1: 4 ■ | 6 ☐ |
| | | | T2: 4 ■ | 6 ☐ |
| ☐ | ☐ | LOW EX ADJUSTMENT (NOTES 2, 4, 6 & 7) | T1: 0 | |
| | | | T2: 0 | |
| ☐ | ☐ | LOW EZ DETECTION (WHEN EZ=70) | T1: ON ☐ | OFF ■ |
| | | | T2: ON ☐ | OFF ■ |
| ☐ | ☐ | LOW EZ DETECTION TIMER (NOTE 12) (WHEN LOW EZ DETECTION IS ON) | T1: N/A | MIN. |
| | | | T2: N/A | MIN. |
| ☐ | ☐ | POSITIVE START (0 = OFF) (NOTES 2, 4, 6 & 10) | T1: ____ | EZ |
| | | | T2: ____ | EZ |
| ☐ | ☐ | POSITIVE START TIMEOUT (0 = NONE) (WHEN POSITIVE START IS ON) | T1: 0 | MIN. |
| | | | T2: 0 | MIN. |
| ☐ | ☐ | SET "AT" OPERATION | NORMAL ■ | DIAGNOSTIC ☐ |
| ☐ | ☐ | DIAGNOSTIC MESSAGES | ON ■ | OFF ☐ |
| ☐ | ☐ | DAX MESSAGES | ON ☐ | OFF ■ |
| ☐ | ☐ | ADVANCE PREEMPT TIMER | ____ | SEC. |
| ☐ | ☐ | MOTION SENSING LEVEL (0 = NORMAL) (NOTES 2, 4 & 6) | T1: ____ | % |
| | | | T2: ____ | % |

EXPANDED PROGRAMMING

1) COMPUTED BY SYSTEM DURING CALIBRATION

2) PROGRAMMED AT INSTALLATION DURING CALIBRATION PROCEDURE

3) THE COMPENSATION VALUE IS PROVIDED BY THE 3000 GCP SYSTEM AND NO ADDITIONAL PROGRAMMING IS NORMALLY REQUIRED. DO NOT CHANGE VALUE WITHOUT PROPER INSTRUCTION

4) INDICATE READING OR SELECTION IN SPACE PROVIDED

5) EACH CONSTANT WARNING DEVICE SYSTEM TO BE PROGRAMMED TO CONVERT TO A MOTION SENSOR 300 FEET FROM EDGE OF ROAD TRAVELLED WAY.
SHUNT TRACK 300 FEET FROM EDGE OF ROAD TRAVELLED WAY AND NOTE "EZ" VALUE.
PROGRAM EACH SYSTEM WITH THE INDICATED "EZ" VALUE +2.

6) REFER TO MODEL 3000 GCP INSTRUCTION AND INSTALLATION MANUAL FOR PROGRAMMING PARAMETERS.

7) "LOW EX" THRESHOLD IS FACTORY PRESET AND NO ADDITIONAL PROGRAMMING IS NORMALLY REQUIRED.
IMPROPER REDUCTION OF THE "LOW EX" THRESHOLD MAY CAUSE REDUCTION IN WARNING TIME.
DO NOT CHANGE VALUE WITHOUT PROPER INSTRUCTION.

8) T1-ISLAND FREQUENCY TO BE PROGRAMMED AT 13.2 KHz
T2-ISLAND FREQUENCY TO BE PROGRAMMED AT N/A KHz

9) **SET UP APPROACH LENGTH AND LINEARIZATION CALIBRATION**
VERIFY THAT "ENHANCED DETECTION" MODE IS PROGRAMMED "OFF" BEFORE ATTEMPTING LINEARIZATION PROCEDURES.

10) AT EACH SIGNAL LOCATION THE CONSTANT WARNING DEVICE SYSTEM IS TO BE PROGRAMMED USING POSITIVE START FUNCTION.
SHUNT TRACK AT FEET FROM EDGE OF ROAD TRAVELLED WAY AND NOTE "EZ" VALUE.
PROGRAM THE SYSTEM WITH THE INDICATED "EZ" VALUE.

11) GCP/MS NODES MUST BE INSTALLED ON THE SEA/R BEFORE RECORDER MODULE 80255 CAN BE INSTALLED.

12) SET VALUE TO MATCH ACTUAL TRAIN MOVEMENT WITHIN THE CROSSING APPROACH CIRCUITS.

13) N ☐ DENOTES NORMAL GCP UNIT
S ☐ DENOTES STANDBY GCP UNIT

| | DEFAULT | RECOMMENDED | T1 | T2 | |
|---|---|---|---|---|---|
| ED SENSITIVITY LEVEL | 1003 | 1004 | ____ | ____ | TO VARY ED SENSITIVITY WITH ED ON, KEY-IN "NEW DATA", THEN 1003, 1004, 1005, OR 10025. THE LOWER THE NUMBER, THE HIGHER THE SENSITIVITY. |
| SPEED LIMITING | 4000 (ON) | 4000 (ON) | ____ | ____ | SPEED LIMITING IS INDEPENDENT OF ED AND A"*" IS SHOWN WHEN IT IS ON. TO TURN ON OR OFF, KEY-IN "NEW DATA", THEN 4000 FOR ON OR 4001 FOR OFF. |
| PREDICTION COUNTS | 3000 (ON) | 3000 (ON) | ____ | ____ | TO INCREASE PREDICTION COUNTS WITH ED ON, KET-IN "NEWDATA", THEN 3001, 3002, OR 3003. 3001 - A DELAY OF 0.5 SEC (DISPLAYED AS ON+1), 3002 - A DELAY OF 1.0 SEC (DISPLAYED AS ON+2), 3003 - A DELAY OF 1.5 SEC (DISPLAYED AS ON+3). |

SII 07 AUG 2014

PROPOSED
DESIGN NO. 13-0463
RED-IN YELLOW-OUT

AS INSTALLED
DATE ____
BY ____
(PRINT NAME)

| PROPOSED D | M | Y | REVISIONS | D | C | COMPLETED D | M | Y | C |
|---|---|---|---|---|---|---|---|---|---|
| | | | PLAN REDRAWN | | | 07 | 08 | 14 | NAD |
| | | | FIELD CHECK | | | 07 | 08 | 14 | SII |
| 07 | 08 | 14 | ADD 13TH ST PREEMPTION | NAD | MRB | | | | |

REGION SOUTHERN
SUB. JOLIET 350
SIGNALS AND COMMUNICATIONS HOMEWOOD
03 DECEMBER 1997
DES. WJL
CH.
#1 GCP APPLICATIONS
PROGRAM DATA (LEVEL 9V121-02L)
LOCKPORT, IL
2ND STREET
JOL-032.06-04

DOT# 289 749S

| SIEMENS INDUSTRY INC | | | |
|---|---|---|---|
| DES.: NAD | DATE: 07/08/14 | JOB NO.: PICA10535 | |
| CKD.: MRB | ISSUE DATE: N/A | EST. NO.: JXXD04361 | |
| DRN.: NAD | PLAN NO.: N/A | SHEET 4 OF 12 | |
| P. TIME: 15:57 | P. DATE: $$PLOT_DATE | CAD ID.: JOL-032.06-04 | |

SIEMENS INDUSTRY INC
LOUISVILLE DIVISION, LOUISVILLE, KY

JOL-032.06-04.dgn
02-SEP-2014

| REVISIONS | | | | |
|---|---|---|---|---|
| NO. | DATE | BY | DESCRIPTION | APP. BY |
| 1 | | | | |
| 2 | | | | |
| 3 | | | | |
| 4 | | | | |
| 5 | | | | |

## ■ PRESS PROGRAM KEY

| N | S | | | |
|---|---|---|---|---|
| ☐ | ☐ | NUMBER OF TRACKS (TRANSCEIVER MODULES) | 1 ☐ | 2 ■ |
| ☐ | ☐ | FREQUENCY (MS/GCP) | T1: 211 | Hz |
| | | | T2: 86 | Hz |
| ☐ | ☐ | UNIDIRECTIONAL/BIDIRECTIONAL | T1: UNI ☐ | BI ■ |
| | | | T2: UNI ☐ | BI ■ |
| ☐ | ☐ | XMIT LEVEL | T1: MAX ☐ | MED ■ |
| | | | T2: MAX ■ | MED ☐ |
| ☐ | ☐ | PREDICTOR/MOTION SENSOR | T1: PRED ■ | MS ☐ |
| | | | T2: PRED ■ | MS ☐ |
| ☐ | ☐ | WARNING TIME SELECTED | T1: 35 | SEC. |
| | | | T2: 35 | SEC. |
| ☐ | ☐ | APPROACH DISTANCE SELECTED (NOTES 2, 4 & 6) | T1: 4432 | FT. |
| | | | T2: 4056 | FT. |
| | | APPROACH DISTANCE COMPUTED (NOTES 1, 4, 6 & 9) | T1: 4451 (NORMAL) | (STANDBY) FT. |
| | | | T2: 4447 (NORMAL) | (STANDBY) FT. |
| ☐ | ☐ | UAX PICKUP DELAY (UAX 1) (0 = OFF) | 25 22 | SEC. |
| ☐ | ☐ | ENA / UAX2 DELAY (0 = ENA) | 0 | SEC. |
| ☐ | ☐ | ISLAND DISTANCE (BETWEEN ISLAND TRACK WIRE CONNECTIONS) (NOTES 2, 4 & 6) | T1: 120 | FT. |
| | | | T2: N/A | FT. |
| ☐ | ☐ | NUMBER OF DAXS | 0 ☐ 1 ☐ 2 ☐ 3 ☐ | 4 ■ |
| ☐ | ☐ | DAX A TRACK ASSIGNMENT | T1 ☐ | T2 ■ |
| ☐ | ☐ | DAX A DISTANCE (0 = PREEMPT) (NOTES 2, 4 & 6) | 1522 | FT. |
| ☐ | ☐ | DAX A WARNING TIME | 35 | SEC. |

## ■ PRESS PROGRAM KEY

| N | S | | | |
|---|---|---|---|---|
| ☐ | ☐ | DAX B TRACK ASSIGNMENT | T1 ☐ | T2 ■ |
| ☐ | ☐ | DAX B DISTANCE (0 = PREEMPT) (NOTES 2, 4 & 6) | 2000 | FT. |
| ☐ | ☐ | DAX B WARNING TIME | 42 | SEC. |
| ☐ | ☐ | DAX C TRACK ASSIGNMENT | T1 ☐ | T2 ■ |
| ☐ | ☐ | DAX C DISTANCE (0 = PREEMPT) (NOTES 2, 4 & 6) | 3093 | FT. |
| ☐ | ☐ | DAX C WARNING TIME | 35 | SEC. |
| ☐ | ☐ | DAX D TRACK ASSIGNMENT | T1 ☐ | T2 ■ |
| ☐ | ☐ | DAX D DISTANCE (0 = PREEMPT) (NOTES 2, 4 & 6) | 4283 4490 | FT. |
| ☐ | ☐ | DAX D WARNING TIME | 35 46 | SEC. |
| ☐ | ☐ | SLAVING MASTER/SLAVE | MASTER ■ | SLAVE ☐ |
| ☐ | ☐ | PASSWORD ENABLED | DISABLED ☐ | |
| | | | ENABLED ■ | |
| ☐ | ☐ | RECORDER INSTALLED (NOTE 11) | NOT INSTALLED ■ | |
| | | | INSTALLED ☐ | |
| | | EXTERNAL NODE # (NOTE 11) | (NORMAL) | (STANDBY) |
| ☐ | ☐ | RS-232-C BAUD RATE | 9600 | BPS |
| ☐ | ☐ | RS-232-C DATA BITS | 7 ☐ | 8 ■ |
| ☐ | ☐ | RS-232-C STOP BITS | 1 ■ | 2 ☐ |
| ☐ | ☐ | RS-232-C PARITY | NONE ■ | MARK ☐ |
| | | | ODD ☐ | SPACE ☐ |
| | | | EVEN ☐ | |
| ☐ | ☐ | DATE (E.G., MON 16 NOV 1987) (NOTE 2) | | |
| ☐ | ☐ | TIME (E.G., 11:25:43 AM) (NOTE 2) | | |
| ☐ | ☐ | DAYLIGHT SAVINGS | ON ■ | OFF ☐ |

## ■ PRESS FUNCTION KEY

| N | S | | | |
|---|---|---|---|---|
| ☐ | ☐ | SWITCH TO MS (ENTER EZ VALUE) (NOTES 2, 4 & 5) | T1: 10 | EZ |
| | | | T2: 10 | EZ |
| ☐ | ☐ | TRANSFER DELAY MS TO GCP (0 = OFF) | T1: 0 | SEC. |
| | | | T2: 0 | SEC. |
| ☐ | ☐ | TRANSFER MS TO GCP PRIME (WHEN PRIME PREDICTION OFFSET IS ON) | T1: ON ☐ | OFF ■ |
| | | | T2: ON ☐ | OFF ■ |
| ☐ | ☐ | TRANSFER MS TO GCP DAX A | T1: ON ☐ | OFF ■ |
| | | | T2: ON ☐ | OFF ■ |
| ☐ | ☐ | TRANSFER MS TO GCP DAX B | T1: ON ☐ | OFF ■ |
| | | | T2: ON ☐ | OFF ■ |
| ☐ | ☐ | TRANSFER MS TO GCP DAX C | T1: ON ☐ | OFF ■ |
| | | | T2: ON ☐ | OFF ■ |
| ☐ | ☐ | TRANSFER MS TO GCP DAX D | T1: ON ☐ | OFF ■ |
| | | | T2: ON ☐ | OFF ■ |
| ☐ | ☐ | PRIME PREDICTION OFFSET (0 = OFF) (NOTES 2, 4 & 6) | T1: | FT. |
| | | | T2: | FT. |
| ☐ | ☐ | PICKUP DELAY PRIME | AUTOMATIC ☐ FIXED ■ | 15 SEC. |
| ☐ | ☐ | PICKUP DELAY DAX A | AUTOMATIC ☐ FIXED ■ | 15 SEC. |
| ☐ | ☐ | PICKUP DELAY DAX B | AUTOMATIC ☐ FIXED ■ | 15 SEC. |
| ☐ | ☐ | PICKUP DELAY DAX C | AUTOMATIC ☐ FIXED ■ | 15 SEC. |
| ☐ | ☐ | PICKUP DELAY DAX D | AUTOMATIC ■ FIXED ■ | 15 8 SEC. |
| ☐ | ☐ | COMPENSATION VALUE (NOTES 3 & 4) | T1: (NORMAL) | (STANDBY) |
| ☐ | ☐ | COMPENSATION VALUE (NOTES 3 & 4) | T2: (NORMAL) | (STANDBY) |

EXPANDED PROGRAMMING

## ■ PRESS FUNCTION KEY

| N | S | | | |
|---|---|---|---|---|
| ☐ | ☐ | ENHANCED DETECTION (ED) (NOTES 6 & 9) | T1: ON ■ | OFF ☐ |
| | | | T2: ON ■ | OFF ☐ |
| ☐ | ☐ | BACK TO BACK T1 & T2 (WHEN ED DETECTION IS ON) | NO ☐ | YES ■ |
| ☐ | ☐ | STATION STOP TIMER (WHEN ENHANCED DETECTION IS ON) | T1: N/A | SEC. |
| | | | T2: N/A | SEC. |
| ☐ | ☐ | NUMBER OF TRACK WIRES | T1: 4 ■ | 6 ☐ |
| | | | T2: 4 ■ | 6 ☐ |
| ☐ | ☐ | LOW EX ADJUSTMENT (NOTES 2, 4, 6 & 7) | T1: 0 | |
| | | | T2: 0 | |
| ☐ | ☐ | LOW EZ DETECTION (WHEN EZ=70) | T1: ON ☐ | OFF ■ |
| | | | T2: ON ☐ | OFF ■ |
| ☐ | ☐ | LOW EZ DETECTION TIMER (WHEN LOW EZ DETECTION IS ON) (NOTE 12) | T1: N/A | MIN. |
| | | | T2: N/A | MIN. |
| ☐ | ☐ | POSITIVE START (0 = OFF) (NOTES 2, 4, 6 & 10) | T1: | EZ |
| | | | T2: | EZ |
| ☐ | ☐ | POSITIVE START TIMEOUT (0 = NONE) (WHEN POSITIVE START IS ON) | T1: 0 | MIN. |
| | | | T2: 0 | MIN. |
| ☐ | ☐ | SET "AT" OPERATION | NORMAL ■ | DIAGNOSTIC ☐ |
| ☐ | ☐ | DIAGNOSTIC MESSAGES | ON ■ | OFF ☐ |
| ☐ | ☐ | DAX MESSAGES | ON ☐ | OFF ■ |
| ☐ | ☐ | ADVANCE PREEMPT TIMER | | SEC. |
| ☐ | ☐ | MOTION SENSING LEVEL (0 = NORMAL) (NOTES 2, 4 & 6) | T1: | % |
| | | | T2: | % |

EXPANDED PROGRAMMING

1) COMPUTED BY SYSTEM DURING CALIBRATION

2) PROGRAMMED AT INSTALLATION DURING CALIBRATION PROCEDURE

3) THE COMPENSATION VALUE IS PROVIDED BY THE 3000 GCP SYSTEM AND NO ADDITIONAL PROGRAMMING IS NORMALLY REQUIRED. DO NOT CHANGE VALUE WITHOUT PROPER INSTRUCTION

4) INDICATE READING OR SELECTION IN SPACE PROVIDED

5) EACH CONSTANT WARNING DEVICE SYSTEM TO BE PROGRAMMED TO CONVERT TO A MOTION SENSOR 300 FEET FROM EDGE OF ROAD TRAVELLED WAY.
SHUNT TRACK 300 FEET FROM EDGE OF ROAD TRAVELLED WAY AND NOTE "EZ" VALUE.
PROGRAM EACH SYSTEM WITH THE INDICATED "EZ" VALUE +2.

6) REFER TO MODEL 3000 GCP INSTRUCTION AND INSTALLATION MANUAL FOR PROGRAMMING PARAMETERS.

7) "LOW EX" THRESHOLD IS FACTORY PRESET AND NO ADDITIONAL PROGRAMMING IS NORMALLY REQUIRED.
IMPROPER REDUCTION OF THE "LOW EX" THRESHOLD MAY CAUSE REDUCTION IN WARNING TIME.
DO NOT CHANGE VALUE WITHOUT PROPER INSTRUCTION.

8) T1-ISLAND FREQUENCY TO BE PROGRAMMED AT 5.9 KHz
T2-ISLAND FREQUENCY TO BE PROGRAMMED AT N/A KHz

9) **SET UP APPROACH LENGTH AND LINEARIZATION CALIBRATION**
VERIFY THAT "ENHANCED DETECTION" MODE IS PROGRAMMED "OFF" BEFORE ATTEMPTING LINEARIZATION PROCEDURES.

10) AT EACH SIGNAL LOCATION THE CONSTANT WARNING DEVICE SYSTEM IS TO BE PROGRAMMED USING POSITIVE START FUNCTION.
SHUNT TRACK AT FEET FROM EDGE OF ROAD TRAVELLED WAY AND NOTE "EZ" VALUE.
PROGRAM THE SYSTEM WITH THE INDICATED "EZ" VALUE.

11) GCP/MS NODES MUST BE INSTALLED ON THE SEA/R BEFORE RECORDER MODULE 80255 CAN BE INSTALLED.

12) SET VALUE TO MATCH ACTUAL TRAIN MOVEMENT WITHIN THE CROSSING APPROACH CIRCUITS.

13) N ☐ DENOTES NORMAL GCP UNIT
S ☐ DENOTES STANDBY GCP UNIT

| | DEFAULT | RECOMMENDED | T1 | T2 | |
|---|---|---|---|---|---|
| ED SENSITIVITY LEVEL | 1003 | 1004 | ——— | ——— | TO VARY ED SENSITIVITY WITH ED ON, KEY-IN "NEW DATA", THEN 1003, 1004, 1005, OR 10025. THE LOWER THE NUMBER, THE HIGHER THE SENSITIVITY. |
| SPEED LIMITING | 4000 (ON) | 4000 (ON) | ——— | ——— | SPEED LIMITING IS INDEPENDENT OF ED AND A"•" IS SHOWN WHEN IT IS ON. TO TURN ON OR OFF, KEY-IN "NEW DATA", THEN 4000 FOR ON OR 4001 FOR OFF. |
| PREDICTION COUNTS | 3000 (ON) | 3000 (ON) | ——— | ——— | TO INCREASE PREDICTION COUNTS WITH ED ON, KET-IN "NEWDATA", THEN 3001, 3002, OR 3003. 3001 - A DELAY OF 0.5 SEC (DISPLAYED AS ON+1), 3002 - A DELAY OF 1.0 SEC (DISPLAYED AS ON+2), 3003 - A DELAY OF 1.5 SEC (DISPLAYED AS ON+3). |

SII 07 AUG 2014

PROPOSED
DESIGN NO. 13-0463
RED-IN YELLOW-OUT

AS INSTALLED
DATE _____
BY _____
(PRINT NAME)

| PROPOSED D | M | Y | REVISIONS | D | C | COMPLETED D | M | Y | C |
|---|---|---|---|---|---|---|---|---|---|
| | | | PLAN REDRAWN | | | 07 | 08 | 14 | NAD |
| | | | FIELD CHECK | | | 07 | 08 | 14 | SII |
| 07 | 08 | 14 | ADD 13TH ST PREEMPTION | NAD | MRB | | | | |

REGION SOUTHERN
SUB. JOLIET 350
SIGNALS AND COMMUNICATIONS HOMEWOOD
03 DECEMBER 1997
DES. WJL
CH.
#2 GCP APPLICATIONS
PROGRAM DATA (LEVEL 9V121-02L)
LOCKPORT, IL
2ND STREET
JOL-032.06-05
DOT# 289 749S

SIEMENS INDUSTRY INC
LOUISVILLE DIVISION, LOUISVILLE, KY

| SIEMENS INDUSTRY INC | | | |
|---|---|---|---|
| DES.: NAD | DATE: 07/08/14 | JOB NO.: PICA10535 | |
| CKD.: MRB | ISSUE DATE: N/A | EST. NO.: JXXD04361 | |
| DRN.: NAD | PLAN NO.: N/A | SHEET 5 OF 12 | |
| P. TIME: 15:57 | P. DATE: $$PLOT_DATE | CAD ID.: JOL-032.06-05 | |

JOL-032.06-05.dgn
02-SEP-2014

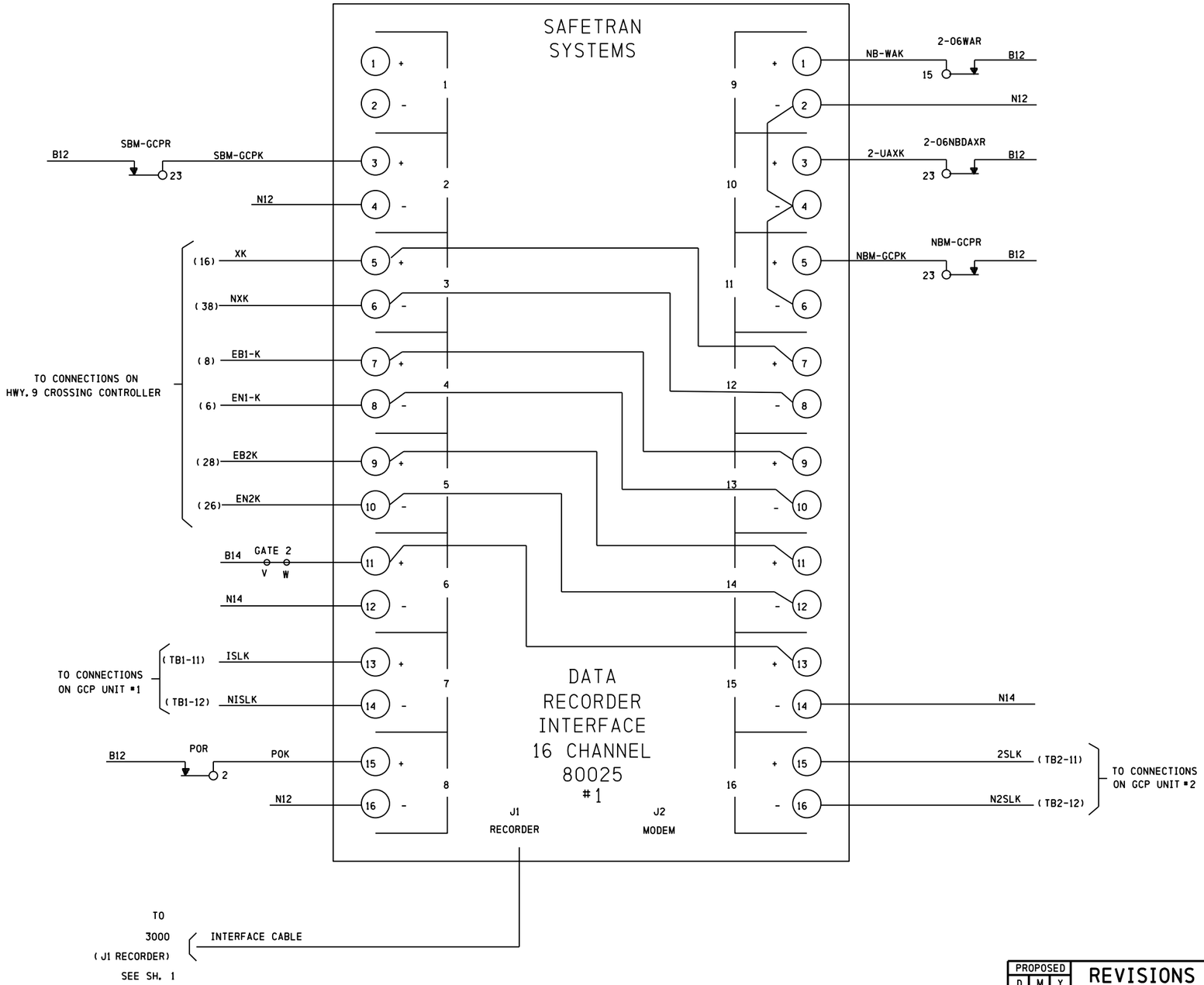


| REVISIONS | | | | |
|---|---|---|---|---|
| NO. | DATE | BY | DESCRIPTION | APP. BY |
| 1 | | | | |
| 2 | | | | |
| 3 | | | | |
| 4 | | | | |
| 5 | | | | |

| SIEMENS INDUSTRY INC | |
|---|---|
| DES. : NAD | DATE: 07/08/14 |
| CKD. : MRB | ISSUE DATE: N/A |
| DRN. : NAD | PLAN NO. :N/A |
| P TIME:15:57 | P DATE: $$PLOT_DATE |
| JOB NO. :PICA10535 | |
| EST. NO. :JXXD04361 | |
| SHEET 6 OF 12 | |
| CAD ID. :JOL-032.06-06 | |

| PROPOSED D | M | Y | REVISIONS | D | C | COMPLETED D | M | Y | C |
|---|---|---|---|---|---|---|---|---|---|
| | | | PLAN REDRAWN | | | 07 | 08 | 14 | NAD |
| | | | FIELD CHECK | | | 07 | 08 | 14 | SII |

REGION SOUTHERN
SUB. JOLIET 350

SIGNALS AND COMMUNICATIONS HOMEWOOD
DES. WJL
04 DECEMBER 1997
CH.

DATA RECORDER #1 INTERFACE NBM

LOCKPORT, IL
2ND STREET

JOL-032.06-06

DOT# 289 749S

SIEMENS INDUSTRY INC
LOUISVILLE DIVISION, LOUISVILLE, KY

JOL-032.06-06.dgn
02-SEP-2014

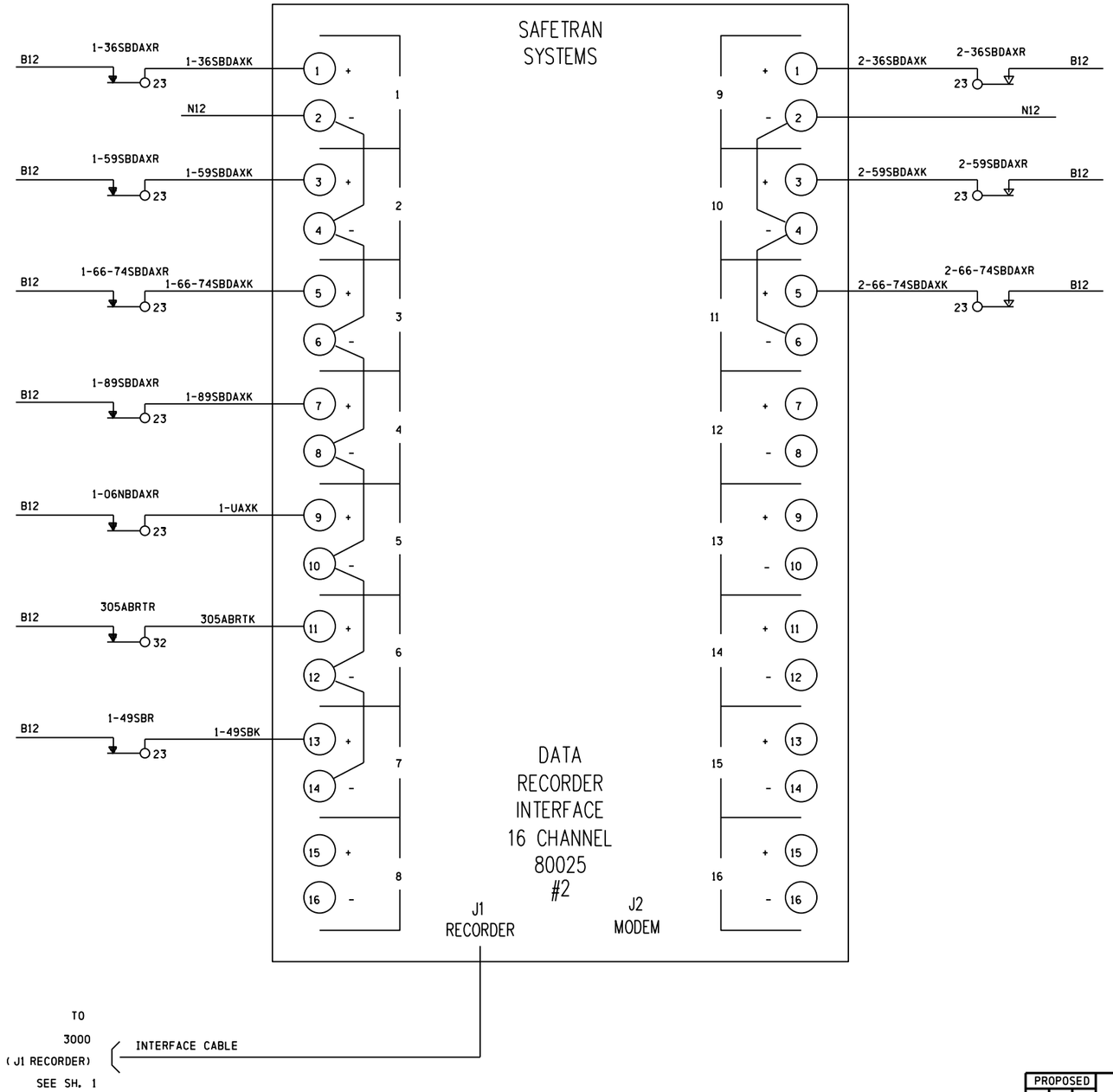


| REVISIONS | | | | |
|---|---|---|---|---|
| NO. | DATE | BY | DESCRIPTION | APP. BY |
| 1 | | | | |
| 2 | | | | |
| 3 | | | | |
| 4 | | | | |
| 5 | | | | |

| SIEMENS INDUSTRY INC | |
|---|---|
| DES. : NAD | DATE: 07/08/14 |
| CKD. : MRB | ISSUE DATE: N/A |
| DRN. : NAD | PLAN NO. :N/A |
| P TIME:15:57 | P DATE: $$PLOT_DATE |
| JOB NO. : PICA10535 | |
| EST. NO. :UXXD04361 | |
| SHEET 7 OF 12 | |
| CAD ID. : JOL-032.06-07 | |

| PROPOSED D | M | Y | REVISIONS | D | C | COMPLETED D | M | Y | C |
|---|---|---|---|---|---|---|---|---|---|
| | | | PLAN REDRAWN | | | 07 | 08 | 14 | NAD |
| | | | FIELD CHECK | | | 07 | 08 | 14 | SII |

REGION SOUTHERN
SUB. JOLIET 350
CN

SIGNALS AND COMMUNICATIONS HOMEWOOD
DES. WJL
05 DECEMBER 1997
CH.
DATA RECORDER #2 INTERFACE SBM
LOCKPORT, IL
2ND STREET
JOL-032.06-07
DOT# 289 749S

jol-032.06-07.dgn
02-SEP-2014

SIEMENS INDUSTRY INC
LOUISVILLE DIVISION, LOUISVILLE, KY

| REVISIONS | | | | |
|---|---|---|---|---|
| NO. | DATE | BY | DESCRIPTION | APP. BY |
| 1 | | | | |
| 2 | | | | |
| 3 | | | | |
| 4 | | | | |
| 5 | | | | |

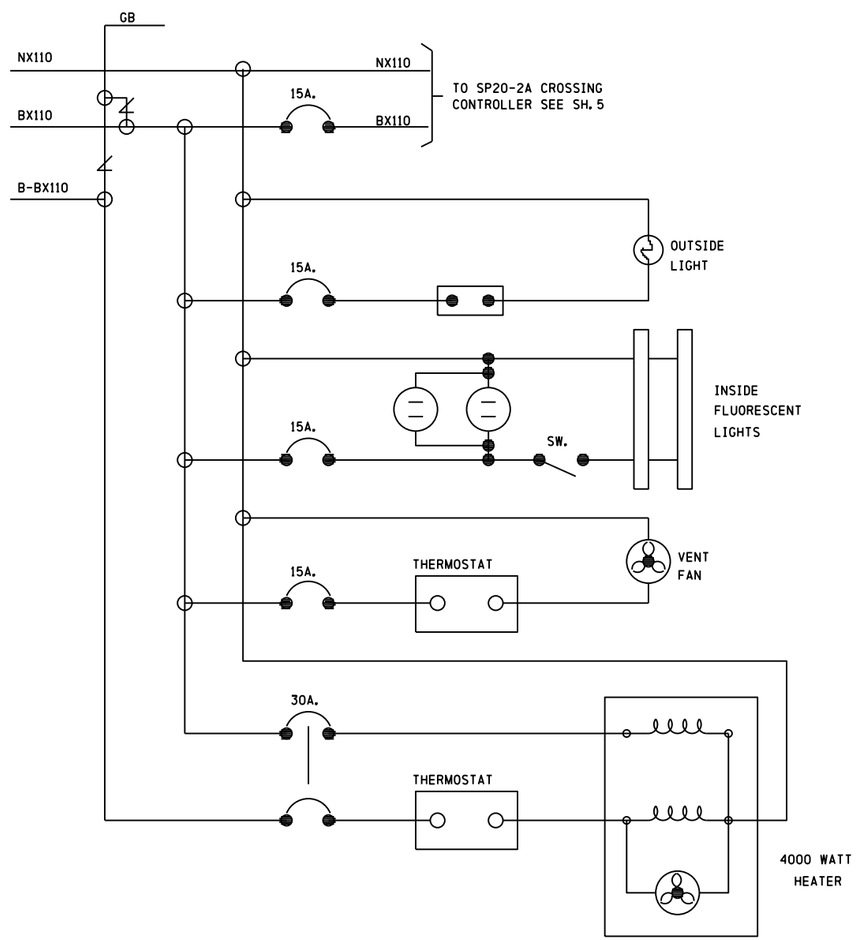


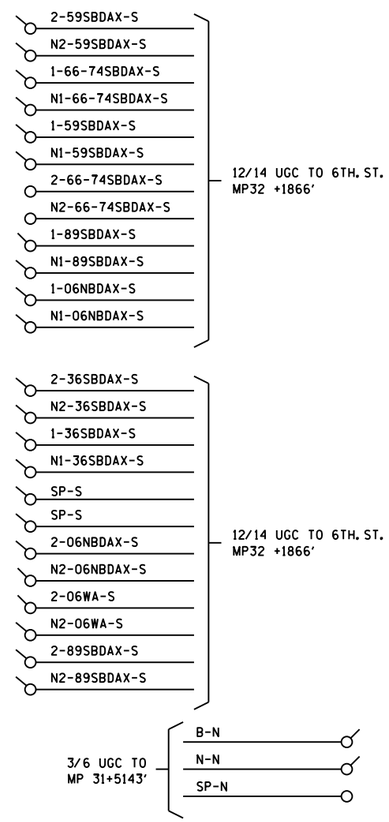


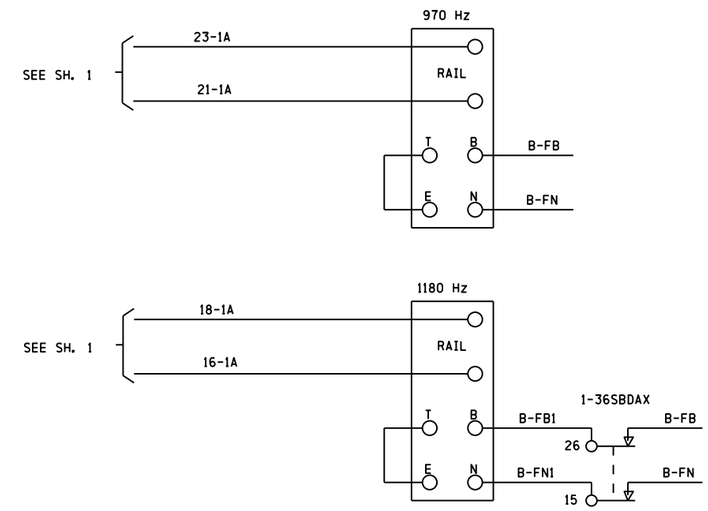


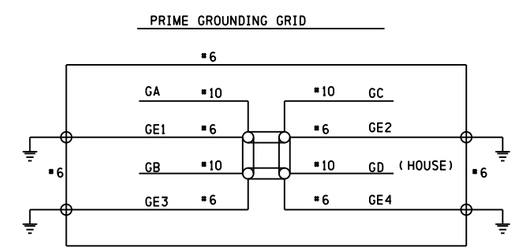


| SIEMENS INDUSTRY INC | |
|---|---|
| DES.: NAD | DATE: 07/08/14 |
| CKD.: MRB | ISSUE DATE: N/A |
| DRN.: NAD | PLAN NO.: N/A |
| P TIME: 15:57 | P DATE: $$PLOT_DATE |
| JOB NO.: PICA10535 | |
| EST. NO.: UXXD04361 | |
| SHEET 8 OF 12 | |
| CAD ID.: JOL-032.06-08 | |

| PROPOSED D | M | Y | REVISIONS | D | C | COMPLETED D | M | Y | C |
|---|---|---|---|---|---|---|---|---|---|
| | | | PLAN REDRAWN | | | 07 | 08 | 14 | NAD |
| | | | FIELD CHECK | | | 07 | 08 | 14 | SII |

REGION SOUTHERN
SUB. JOLIET 350

SIGNALS AND COMMUNICATIONS HOMEWOOD
DES. WJL
05 DECEMBER 1997
CH.

POWER & PSO CIRCUITS

LOCKPORT, IL
2ND STREET

JOL-032.06-08

DOT# 289 749S

SIEMENS INDUSTRY INC
LOUISVILLE DIVISION, LOUISVILLE, KY

JOL-032.06-08.dgn
02-SEP-2014

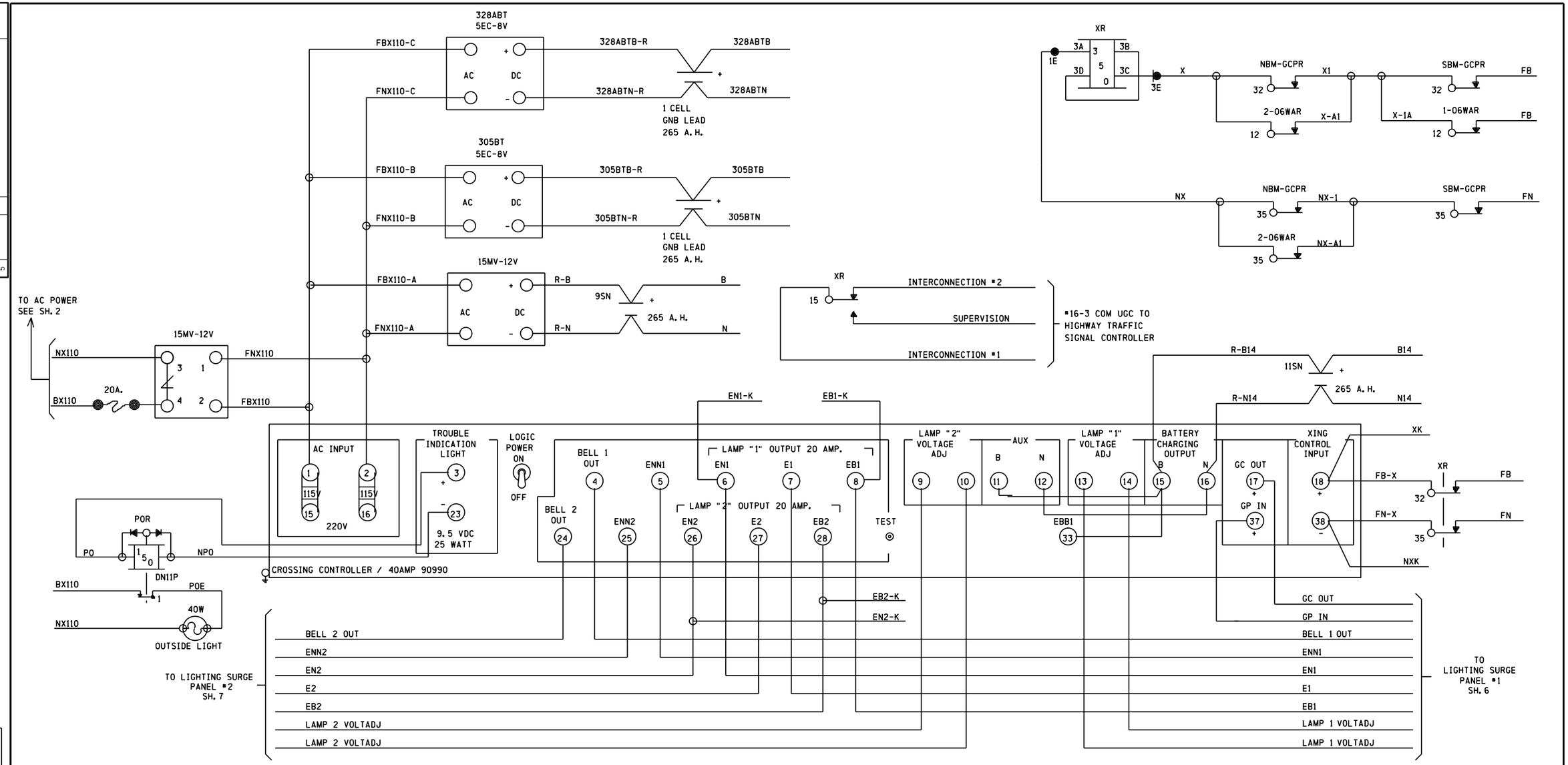


| NO. | DATE | BY | DESCRIPTION | APP. BY |
|---|---|---|---|---|
| 1 | | | | |
| 2 | | | | |
| 3 | | | | |
| 4 | | | | |
| 5 | | | | |

REVISIONS

| | | | |
|---|---|---|---|
| SIEMENS INDUSTRY INC | | | |
| DES.: NAD | DATE: 07/08/14 | JOB NO.: PICA10535 | |
| CKD.: MRB | ISSUE DATE: N/A | EST. NO.: JXXD04361 | |
| DRN.: NAD | PLAN NO.: N/A | SHEET 9 OF 12 | |
| P TIME: 15:57 | P DATE: $$PLOT_DATE | CAD ID.: JOL-032.06-09 | |

| PROPOSED D | M | Y | REVISIONS | D | C | COMPLETED D | M | Y | C |
|---|---|---|---|---|---|---|---|---|---|
| | | | PLAN REDRAWN | | | 07 | 08 | 14 | NAD |
| | | | FIELD CHECK | | | 07 | 08 | 14 | SII |

REGION SOUTHERN
SUB. JOLIET 350

SIGNALS AND COMMUNICATIONS HOMEWOOD
11 DECEMBER 1997
DES. WJL
CH.

CROSSING CONTROLLER
LOCKPORT, IL
2ND STREET

JOL-032.06-09

DOT# 289 749S

SIEMENS INDUSTRY INC
LOUISVILLE DIVISION, LOUISVILLE, KY

JOL-032.06-09.dgn
02-SEP-2014

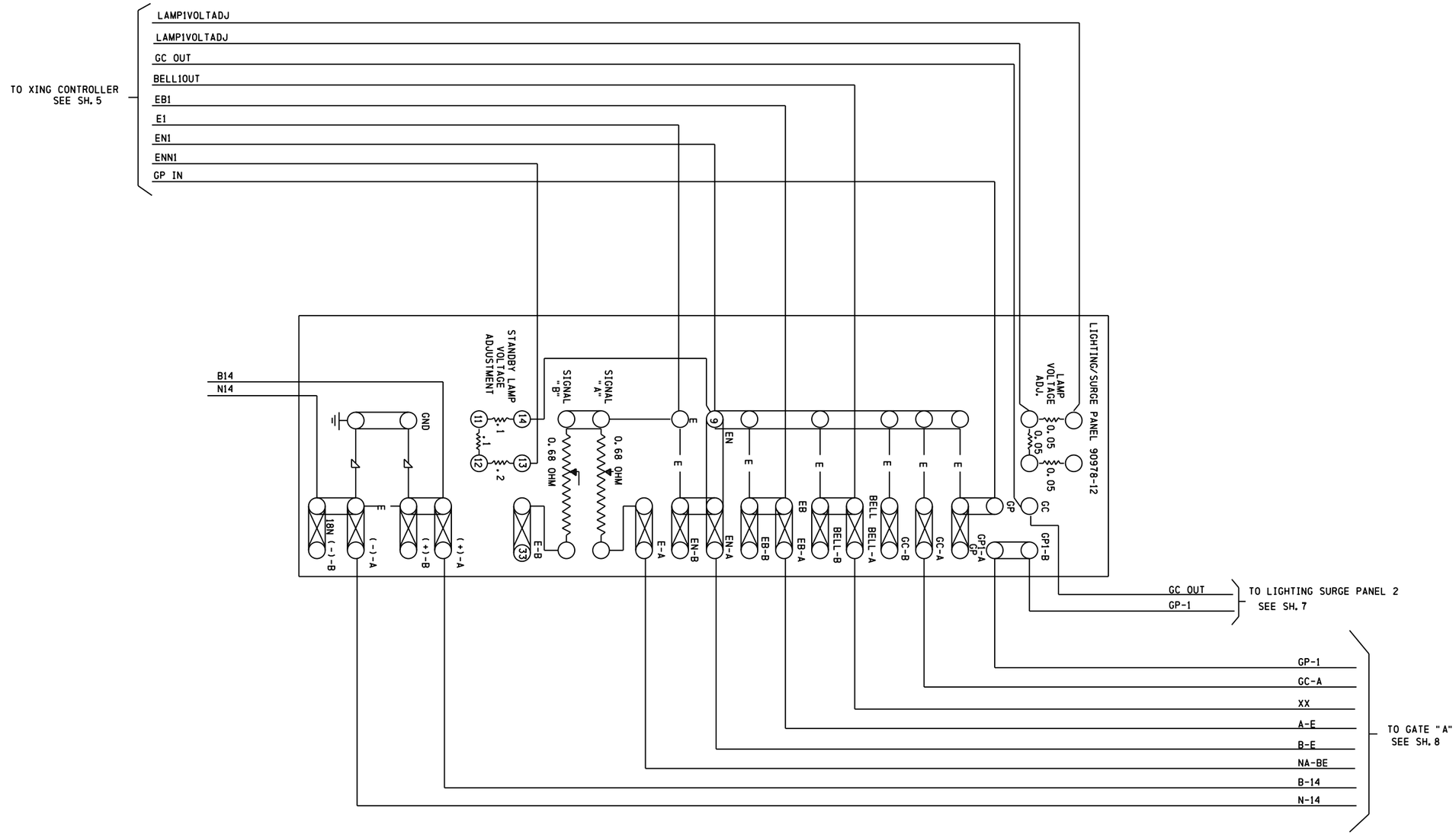


| REVISIONS | | | | |
|---|---|---|---|---|
| NO. | DATE | BY | DESCRIPTION | APP. BY |
| 1 | | | | |
| 2 | | | | |
| 3 | | | | |
| 4 | | | | |
| 5 | | | | |

| SIEMENS INDUSTRY INC | | | |
|---|---|---|---|
| DES. : NAD | DATE: 07/08/14 | JOB NO.: PICA10535 | |
| CKD. : MRB | ISSUE DATE: N/A | EST. NO. :UXXD04361 | |
| DRN. : NAD | PLAN NO. :N/A | SHEET 10 OF 12 | |
| P TIME:15:57 | P DATE: $$PLOT_DATE | CAD ID. : JOL-032.06-10 | |

| PROPOSED | | | REVISIONS | D | C | COMPLETED | | | C |
|---|---|---|---|---|---|---|---|---|---|
| D | M | Y | | | | D | M | Y | |
| | | | PLAN REDRAWN | | | 07 | 08 | 14 | NAD |

REGION SOUTHERN
SUB. JOLIET 350

SIGNALS AND COMMUNICATIONS HOMEWOOD
DES. WJL
11 DECEMBER 1997
CH.

LIGHTING SURGE PANEL 1

LOCKPORT, IL

2ND SHEET

JOL-032.06-10

DOT# 289 749S

SIEMENS INDUSTRY INC
LOUISVILLE DIVISION, LOUISVILLE, KY

jol-032.06-10.dgn
02-SEP-2014

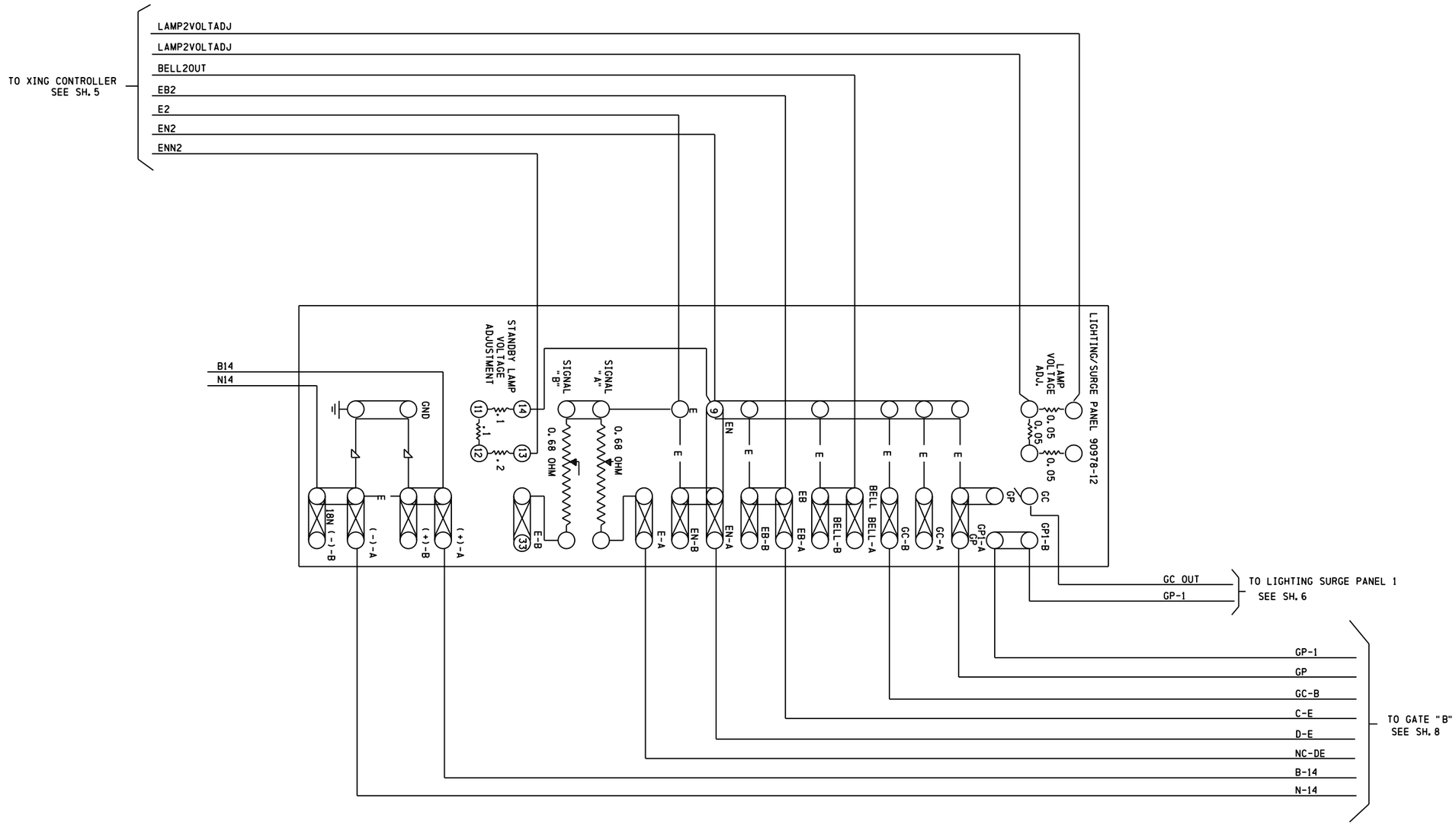


| REVISIONS | | | | |
|---|---|---|---|---|
| NO. | DATE | BY | DESCRIPTION | APP. BY |
| 1 | | | | |
| 2 | | | | |
| 3 | | | | |
| 4 | | | | |
| 5 | | | | |

| SIEMENS INDUSTRY INC | | | |
|---|---|---|---|
| DES.: NAD | DATE: 07/08/14 | JOB NO.: PICA10535 | |
| CKD.: MRB | ISSUE DATE: N/A | EST. NO.: UXXD04361 | |
| DRN.: NAD | PLAN NO.: N/A | SHEET 11 OF 12 | |
| P TIME: 15:57 | P DATE: $$PLOT_DATE | CAD ID.: JOL-032.06-11 | |

| PROPOSED D | PROPOSED M | PROPOSED Y | REVISIONS | D | C | COMPLETED D | COMPLETED M | COMPLETED Y | C |
|---|---|---|---|---|---|---|---|---|---|
| | | | PLAN REDRAWN | | | 07 | 08 | 14 | NAD |

REGION SOUTHERN
SUB. JOLIET 350

SIGNALS AND COMMUNICATIONS HOMEWOOD — DES. WJL
11 DECEMBER 1997 — CH.

LIGHTING SURGE PANEL 2

LOCKPORT, IL
2ND STREET

JOL-032.06-11

DOT# 289 749S

SIEMENS INDUSTRY INC
LOUISVILLE DIVISION, LOUISVILLE, KY

jol-032.06-11.dgn
02-SEP-2014

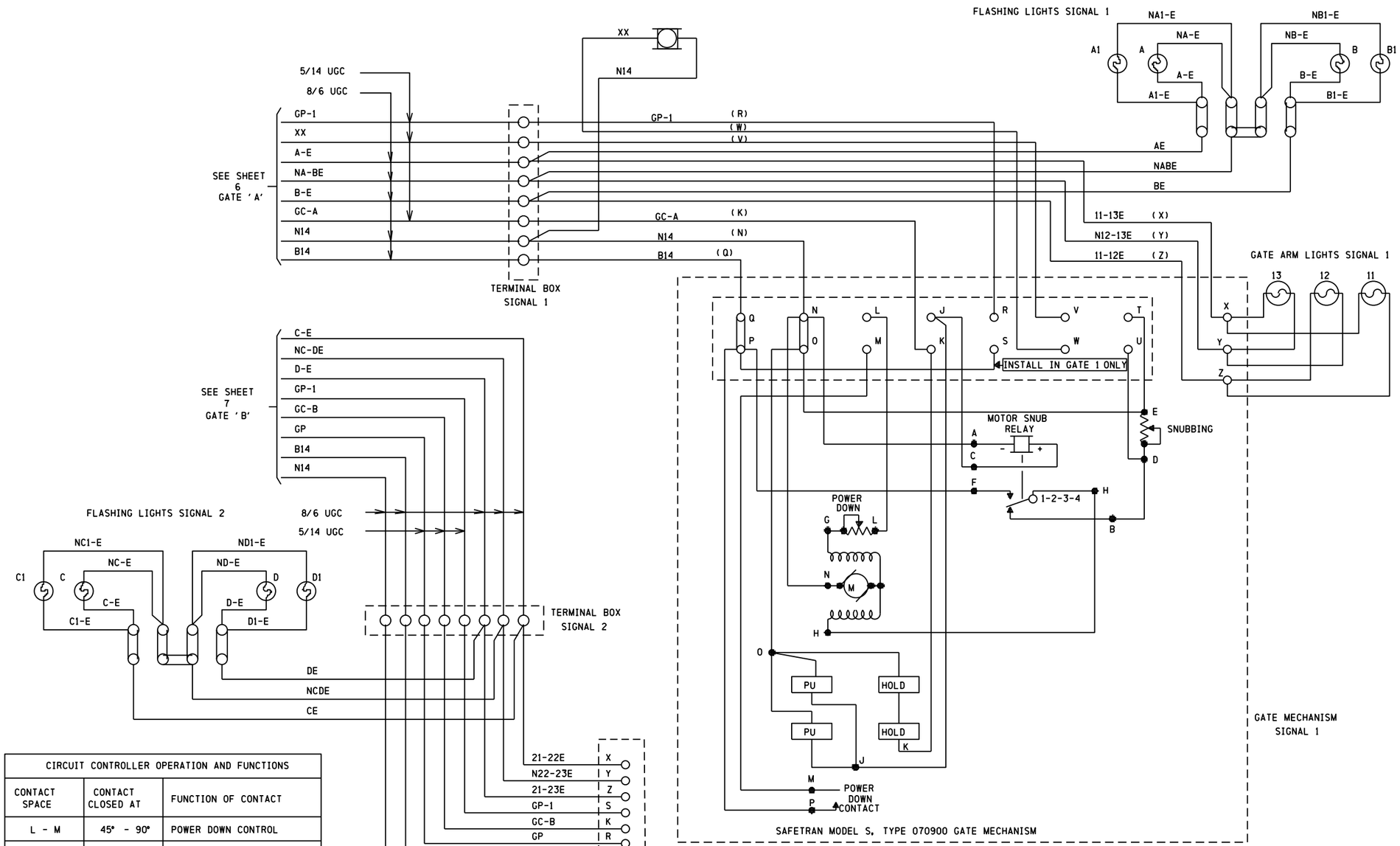


| CIRCUIT CONTROLLER OPERATION AND FUNCTIONS | | |
|---|---|---|
| CONTACT SPACE | CONTACT CLOSED AT | FUNCTION OF CONTACT |
| L - M | 45° - 90° | POWER DOWN CONTROL |
| J - K | 0° - 89° | POWER UP CONTROL |
| R - S | 83° - 90° | GPXR CONTROL |
| V - W | 5° - 90° | BELL/GDK |
| T - U | 0° - 5° | MOTOR SNUB CONTROL |

| REVISIONS | | | |
|---|---|---|---|
| NO. | DATE | BY | DESCRIPTION |
| 1 | | | |
| 2 | | | |
| 3 | | | |
| 4 | | | |
| 5 | | | |

| | | | |
|---|---|---|---|
| SIEMENS INDUSTRY INC | | | |
| DES.: NAD | DATE: 07/08/14 | JOB NO.: PICA10535 | |
| CKD.: MRB | ISSUE DATE: N/A | EST. NO.: JXXD04361 | |
| DRN.: NAD | PLAN NO.: N/A | SHEET 12 OF 12 | |
| P TIME: 15:57 | P DATE: $$PLOT_DATE | CAD ID.: JOL-032.06-12 | |

SIEMENS INDUSTRY INC
LOUISVILLE DIVISION, LOUISVILLE, KY

| PROPOSED D | M | Y | REVISIONS | D | C | COMPLETED D | M | Y | C |
|---|---|---|---|---|---|---|---|---|---|
| | | | PLAN REDRAWN | | | 07 | 08 | 14 | NAD |

REGION SOUTHERN
SUB. JOLIET 350

SIGNALS AND COMMUNICATIONS HOMEWOOD
12 DECEMBER 1997
DES. WJL
CH.

GATE CONTROLS
LOCKPORT, IL
2ND STREET

JOL-032.06-12

DOT# 289 749S

12

JOL-032.06-12.dgn
02-SEP-2014