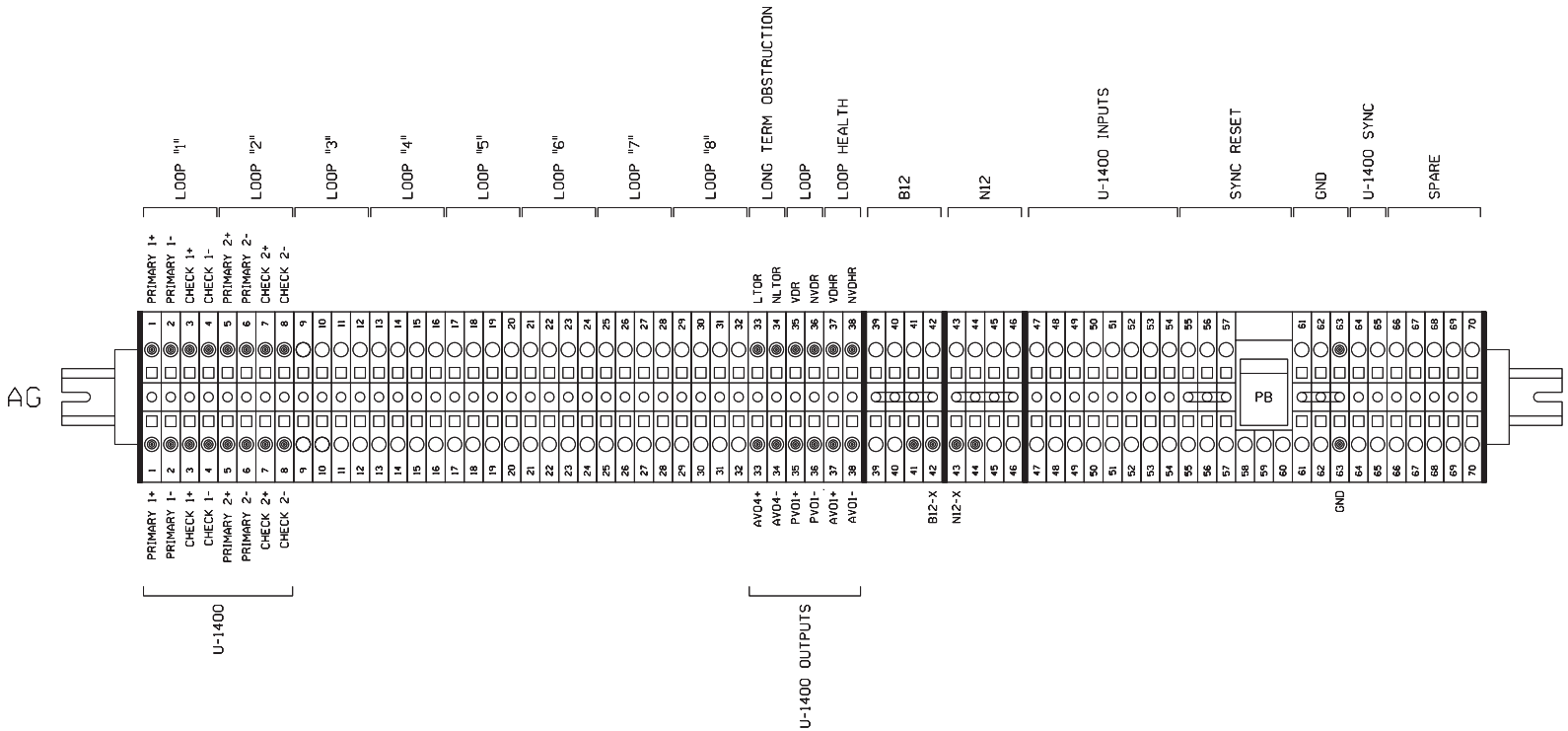

NEW SHEET

Designed: 3/13/13

TIER 4 ILLINOIS HIGH SPEED RAIL PROJECT PHASE 1 MP 134.90-146.50

Rec#: WO#: 15866
IS: / / WIT/MJF

MODIFICATION LEVEL	
O. A. LAST LEVEL CHECKED	DU
LAST LEVEL MOD THIS TYPICAL	DU
LAST LEVEL BY DESIGNER	DU
CHANGED FROM TYPICAL?	Y

REV 01.24.11 4K 2TKEGMS.9C

CIRCUIT MODIFICATIONS ARE NOT TO BE MADE WITHOUT AUTHORITY FROM THE OFFICE OF SIGNAL DESIGN

Date: 3/13/13
Des: WIT
Chk: MWK
AFE: 15866

UNION PACIFIC RAILROAD

ATLANTA, ILLINOIS
FIELD CROSSING
SPRINGFIELD SUBDIVISION

Office of Sr AVP Engineering - Signal/TCO Omaha, Nebraska

Sh.: 8
DOT 290968C
MP: 144.47
ID: CSL14447.8X

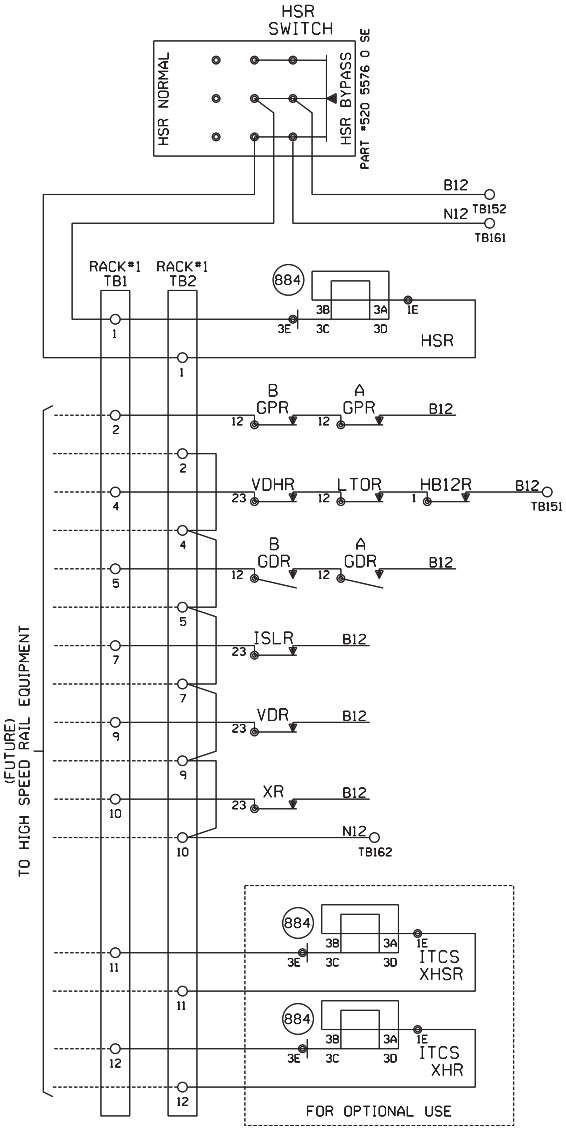

NEW SHEET

Designed: 3/13/13 TIER 4 ILLINOIS HIGH SPEED RAIL PROJECT PHASE 1 MP 134.90-146.50 Rec#: WO#: 15866 IS: / /MWK / /WIT/MJF	MODIFICATION LEVEL		CIRCUIT MODIFICATIONS ARE NOT TO BE MADE WITHOUT AUTHORITY FROM THE OFFICE OF SIGNAL DESIGN	Date: 3/13/13 Des: WIT Chk: MWK AFE: 15866	UNION PACIFIC RAILROAD ATLANTA, ILLINOIS FIELD CROSSING SPRINGFIELD SUBDIVISION Office of Sr AVP Engineering - Signal/TCO Omaha, Nebraska	Sh.: 9 DOT 290968C MP: 144.47 ID: CSL14447.9X
	O. A. LAST LEVEL CHECKED	DU				
	LAST LEVEL MOD THIS TYPICAL	DU				
	LAST LEVEL BY DESIGNER	DU				
	CHANGED FROM TYPICAL?	Y				
	REV 01.24.11 4K 2TKEGMS.9C					

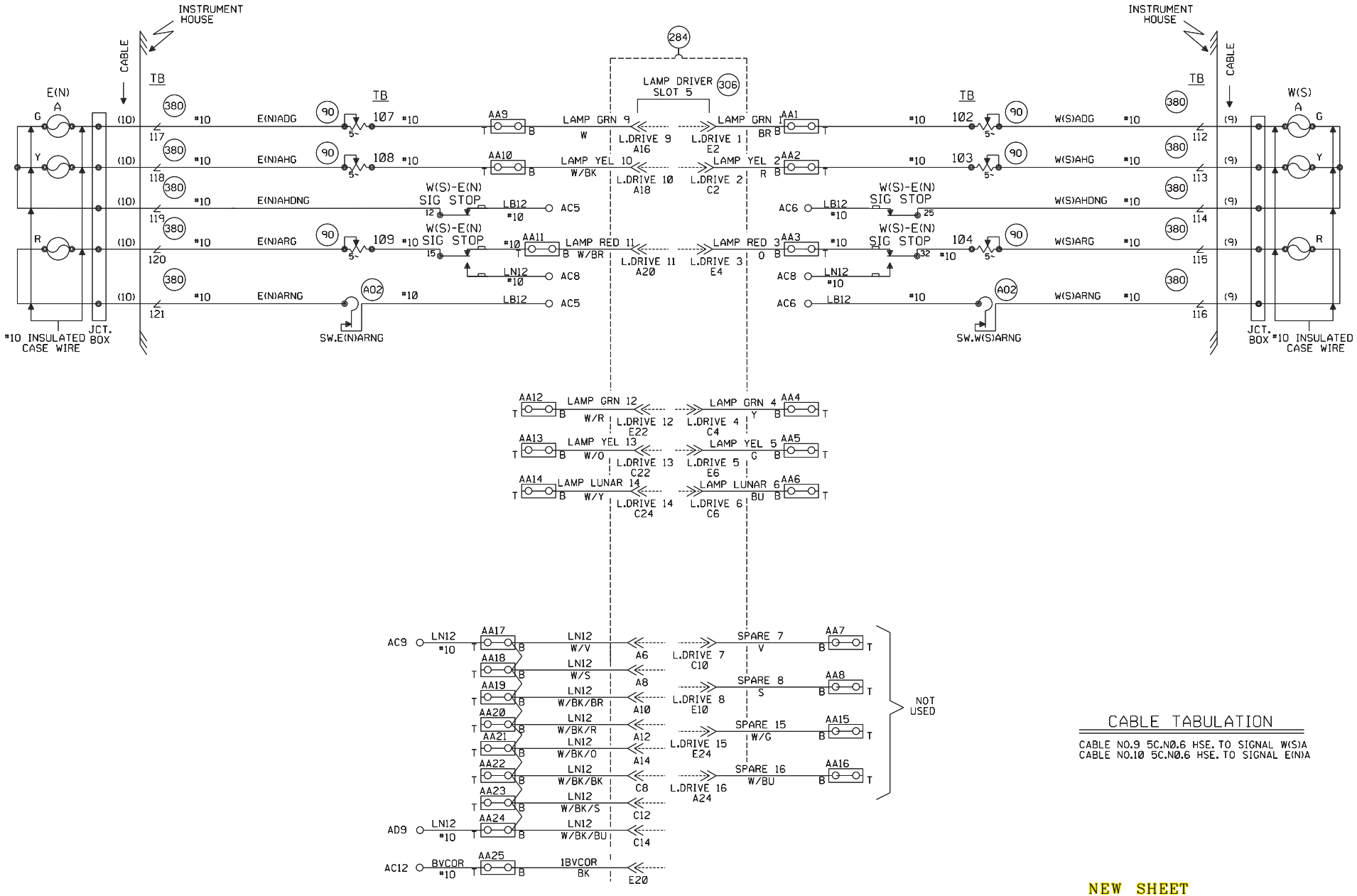

CABLE TABULATION

CABLE NO.9 5C.N0.6 HSE. TO SIGNAL W(S)A
CABLE NO.10 5C.N0.6 HSE. TO SIGNAL E(N)A

NEW SHEET

Designed: 3/13/13 TIER 4 ILLINOIS HIGH SPEED RAIL PROJECT PHASE 1 MP 134.90-146.50 Rec#: WO#: 15866 IS: /MWK / WIT/MJF	MODIFICATION LEVEL		CIRCUIT MODIFICATIONS ARE NOT TO BE MADE WITHOUT AUTHORITY FROM THE OFFICE OF SIGNAL DESIGN	Date: 3/13/13 Des: WIT Chk: MWK AFE: 15866	UNION PACIFIC RAILROAD ATLANTA, ILLINOIS FIELD CROSSING SPRINGFIELD SUBDIVISION Office of Sr AVP Engineering - Signal/TCO Omaha, Nebraska	Sh.: 10 DOT 290968C MP: 144.47 ID: CSL14447.10S
	Q.A. LAST LEVEL CHECKED	DU				
	LAST LEVEL MOD THIS TYPICAL	DU				
	LAST LEVEL BY DESIGNER	DU				
	CHANGED FROM TYPICAL?	Y				
	REV 8/20/10 1TMLHBINTUGS.3					

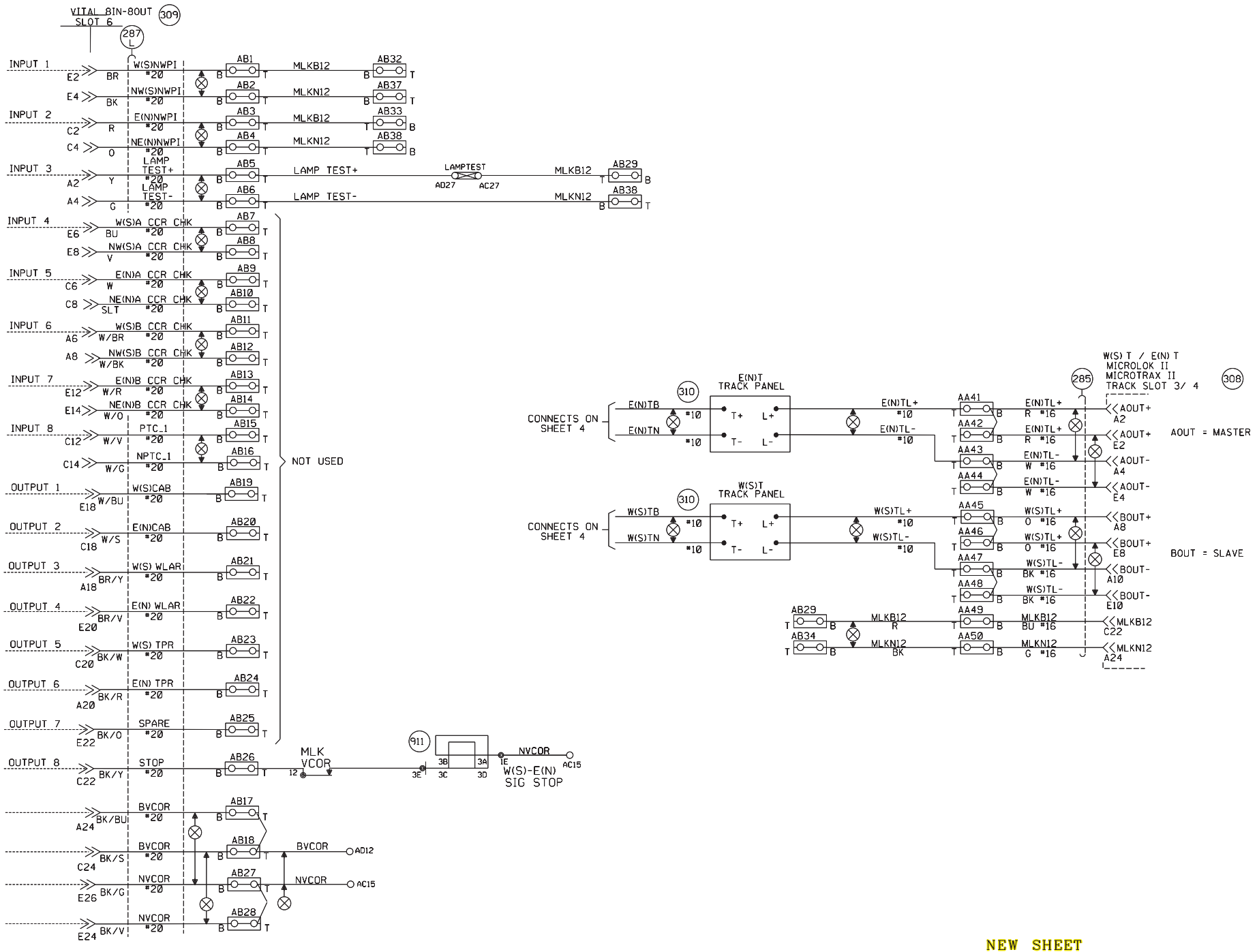

NEW SHEET

Designed: 3/13/13 TIER 4 ILLINOIS HIGH SPEED RAIL PROJECT PHASE 1 MP 134.90-146.50 Rec#: WO#: 15866 IS: /MWK / / WIT/MJF	MODIFICATION LEVEL Q. A. LAST LEVEL CHECKED DU LAST LEVEL MOD THIS TYPICAL DU LAST LEVEL BY DESIGNER DU CHANGED FROM TYPICAL? Y REV 8/20/10 1TMLHBINTU.3A	CIRCUIT MODIFICATIONS ARE NOT TO BE MADE WITHOUT AUTHORITY FROM THE OFFICE OF SIGNAL DESIGN	Date: 3/13/13 Des: WIT Chk: MWK AFE: 15866	UNION PACIFIC RAILROAD ATLANTA, ILLINOIS FIELD CROSSING SPRINGFIELD SUBDIVISION Office of Sr AVP Engineering - Signal/TCO Omaha, Nebraska	Sh.: 11 DOT 290968C MP: 144.47 ID: CSL14447.11S		

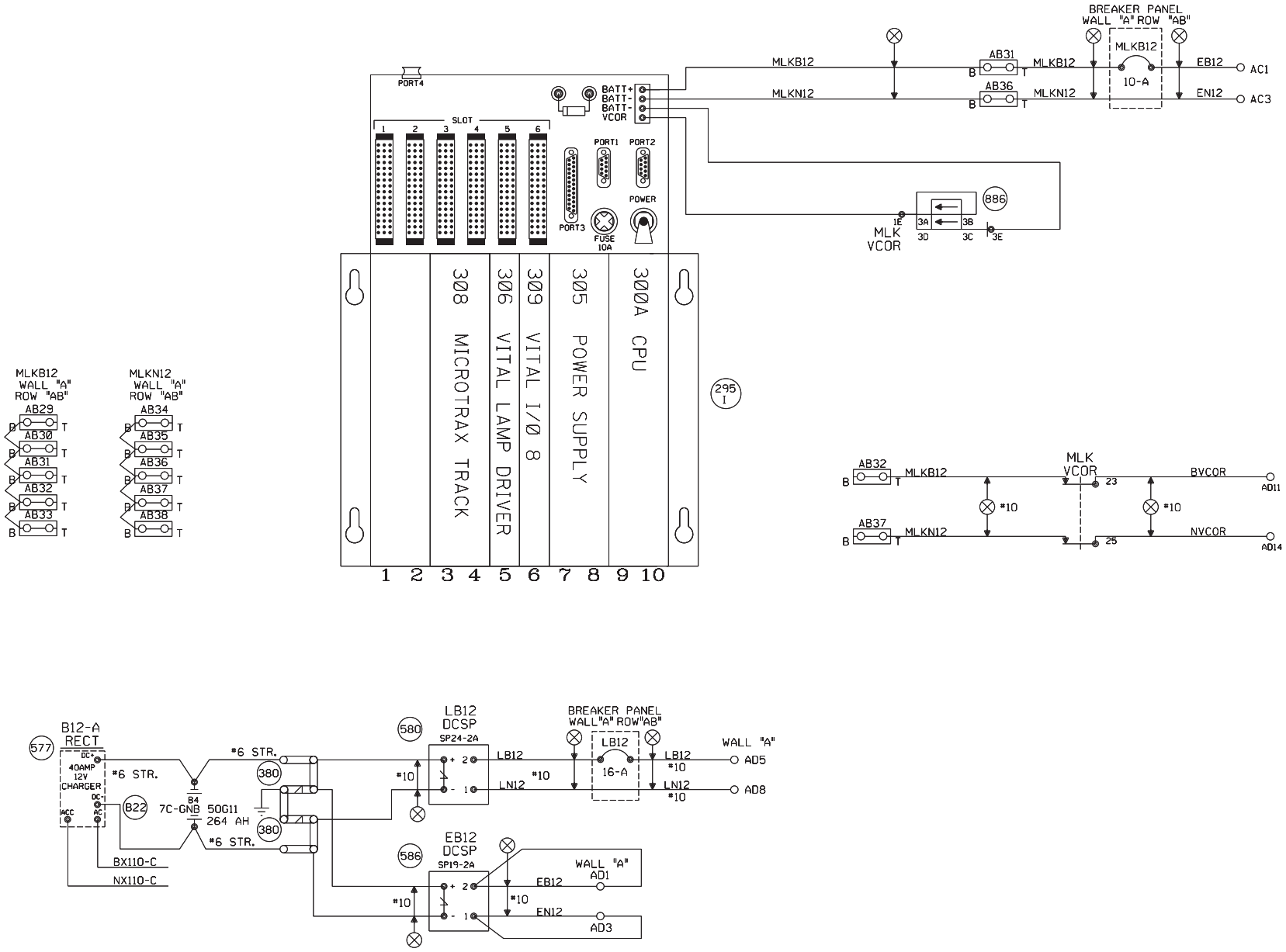

NEW SHEET

Designed: 3/13/13 TIER 4 ILLINOIS HIGH SPEED RAIL PROJECT PHASE 1 MP 134.90-146.50 Rec#: WO#: 15866 IS: /MWK / / WIT/MJF	MODIFICATION LEVEL		CIRCUIT MODIFICATIONS ARE NOT TO BE MADE WITHOUT AUTHORITY FROM THE OFFICE OF SIGNAL DESIGN	Date: 3/13/13 Des: WIT Chk: MWK AFE: 15866	UNION PACIFIC RAILROAD ATLANTA, ILLINOIS FIELD CROSSING SPRINGFIELD SUBDIVISION Office of Sr AVP Engineering - Signal/TCO Omaha, Nebraska	Sh.: 12 DOT 290968C MP: 144.47 ID: CSL14447.12S
	Q.A. LAST LEVEL CHECKED	DU				
	LAST LEVEL MOD THIS TYPICAL	DU				
	LAST LEVEL BY DESIGNER	DU				
	CHANGED FROM TYPICAL?	Y				
	REV 8/20/10 1TMLHBINTU.4					

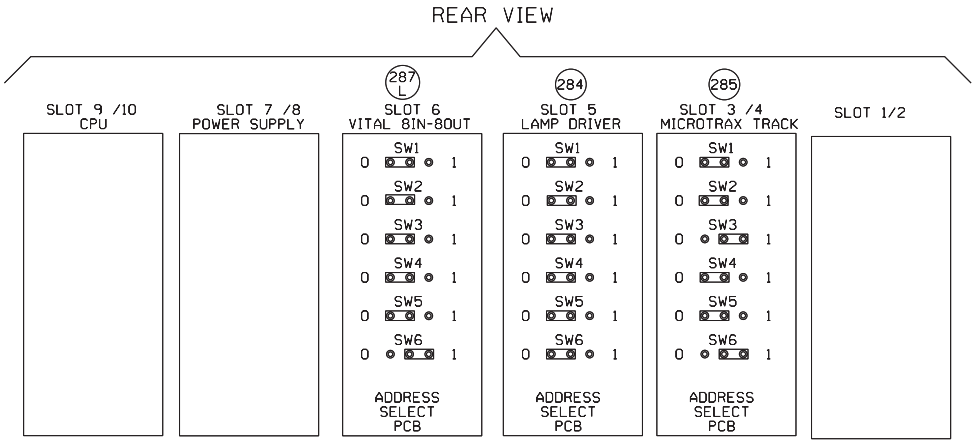

NOTE: FOR PTC COMPATIBLE CPU JUMPER SETTINGS REFER TO ANSALDO MANUAL 1D1.0028 PAGE 1-26 1-27 1-28 REV. 1 DATE 8/2009

FOR STANDARD CPU JUMPER SETTINGS REFER TO ANSALDO MANUAL SM-6800B PAGE 2-12, 2-13 REV.2.5 DATE 9/2000

IF BOX CHECKED SET APPROPRIATE PROG. ID

ML8UCCB REV. N

15 SEC SLOW PICK ET TO PREVENT JOINT HOP		USE WHEN INTERFACING MICRO-ECODE TO GETS ECODE
15 SEC SLOW PICK WT TO PREVENT JOINT HOP		USE WHEN INTERFACING MICRO-ECODE TO GETS ECODE
DISABLE DBFY EAST ?	X	(SET PROG ID 1)
DISABLE DBFY WEST ?	X	(SET PROG ID 2)
PROGRAM ID 1 (BINARY 1)	X	
PROGRAM ID 2 (BINARY 2)	X	
PROGRAM ID 3 (BINARY 4)		(MUST BE CLEAR)
PROGRAM ID 4 (BINARY 8)		(MUST BE CLEAR)
PROGRAM ID 5 (BINARY 16)		(MUST BE CLEAR)
PROGRAM ID 6 (BINARY 32)		(MUST BE CLEAR)
PROGRAM ID 7 (BINARY 64)		(SET TO DISABLE VIO8 CAB)
PROGRAM ID 8 (BINARY 128)	X	(MUST BE SET)
PROGRAM ID 9 (BINARY 256)		(SET TO DISABLE INCAND. SIG BOARD)
PROGRAM ID 10 (BINARY 512)	X	(SET TO DISABLE LED SIG BOARD)
PROGRAM ID 11 (BINARY 1024)		
PROGRAM ID 12 (BINARY 2048)		
PROGRAM ID 13 (BINARY 4096)		
PROGRAM ID 14 (BINARY 8192)		
PROGRAM ID 15 (BINARY 16384)		
PROGRAM ID 16 (BINARY 32768)		
WEST TK UP SEND C5 EAST		
REC C5 W TK SEND C5 EAST	X	
EAST TK UP SEND C5 WEST	X	
REC C5 E TK SEND C5 WEST		
SET IF W(S) "B" FLASHING RED		(SET PROG ID 11)
SET IF W(S) "B" LUNAR		(SET PROG ID 12)
SET IF W(S) "B" YELLOW		(SET PROG ID 13)
SET IF E(N) "B" FLASHING RED		(SET PROG ID 14)
SET IF E(N) "B" LUNAR		(SET PROG ID 15)
SET IF E(N) "B" YELLOW		(SET PROG ID 16)
E(N) C5 APPLIT	X	(ENABLE APPLIT W(S) SIG W/LOSS OF C5)
W(S) C5 APPLIT	X	(ENABLE APPLIT E(N) SIG W/LOSS OF C5)

NEW SHEET

Designed: 3/13/13
TIER 4 ILLINOIS HIGH SPEED RAIL PROJECT
PHASE 1
MP 134.90-146.50
Rec#: WO#: 15866
IS: /MWK
/ WIT/MJF

MODIFICATION LEVEL	
Q. A. LAST LEVEL CHECKED	DU
LAST LEVEL MOD THIS TYPICAL	DU
LAST LEVEL BY DESIGNER	DU
CHANGED FROM TYPICAL?	Y

rev 8/20/10 1TMLHBINTU.5

CIRCUIT MODIFICATIONS ARE NOT TO BE MADE WITHOUT AUTHORITY FROM THE OFFICE OF SIGNAL DESIGN

Date: 3/13/13
Des: WIT
Chk: MWK
AFE: 15866

UNION PACIFIC RAILROAD
ATLANTA, ILLINOIS
FIELD CROSSING
SPRINGFIELD SUBDIVISION
Office of Sr AVP Engineering - Signal/TCO Omaha, Nebraska

Sh.: 13
DOT 290968C
MP: 144.47
ID: CSL14447.13S

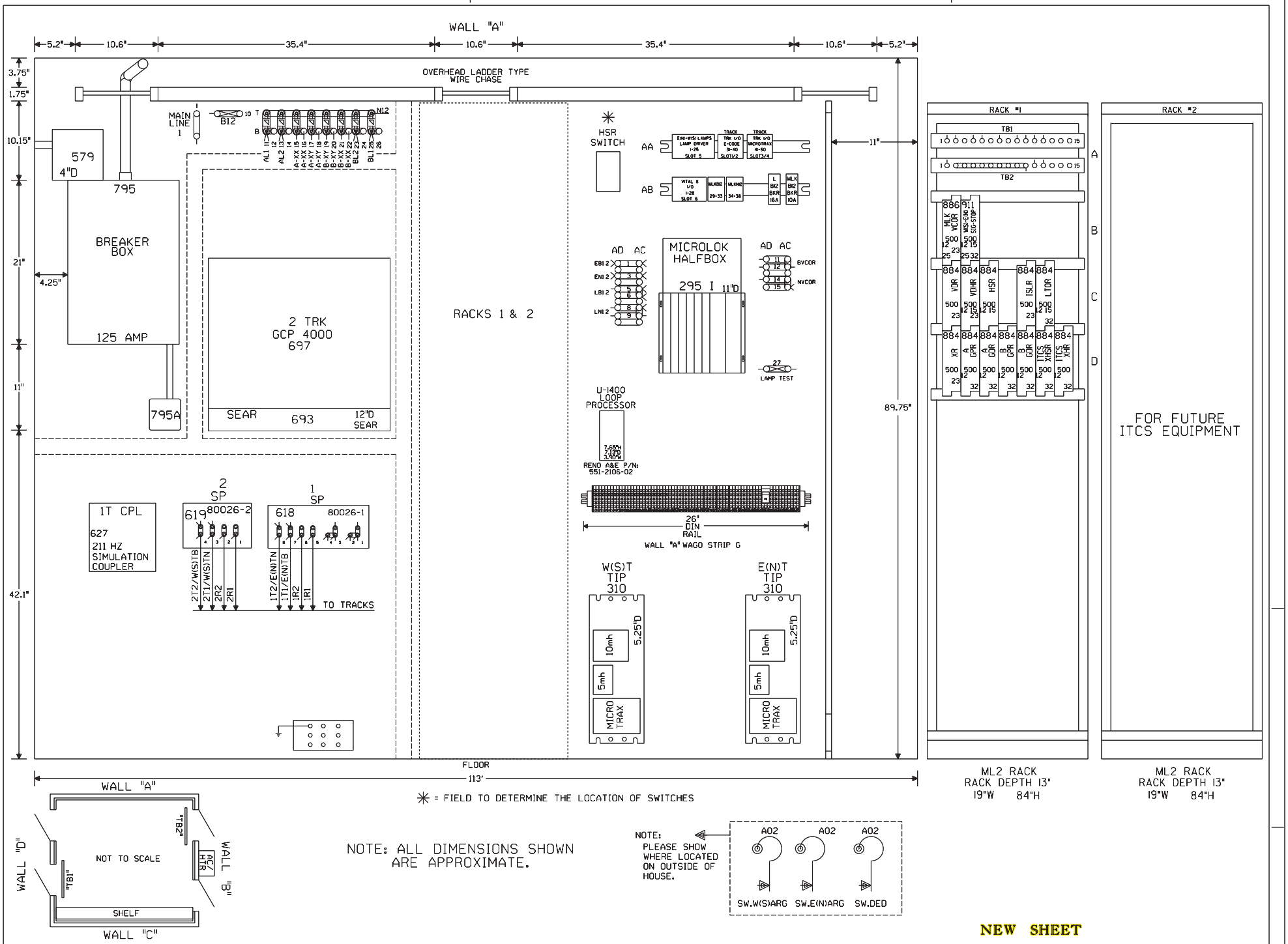

NEW SHEET

Designed: 3/13/13 TIER 4 ILLINOIS HIGH SPEED RAIL PROJECT PHASE 1 MP 134.90-146.50 Rec#: WO#: 15866 IS: /MWK / /WIT/MJF	CIRCUIT MODIFICATIONS ARE NOT TO BE MADE WITHOUT AUTHORITY FROM THE OFFICE OF SIGNAL DESIGN	Date: 3/13/13 Des: WIT Chk: MWK AFE: 15866	UNION PACIFIC RAILROAD ATLANTA, ILLINOIS FIELD CROSSING SPRINGFIELD SUBDIVISION Office of Sr AVP Engineering - Signal/TCO Omaha, Nebraska	Sh.: 14 DOT 290968C MP: 144.47 ID: CSL14447.14X		

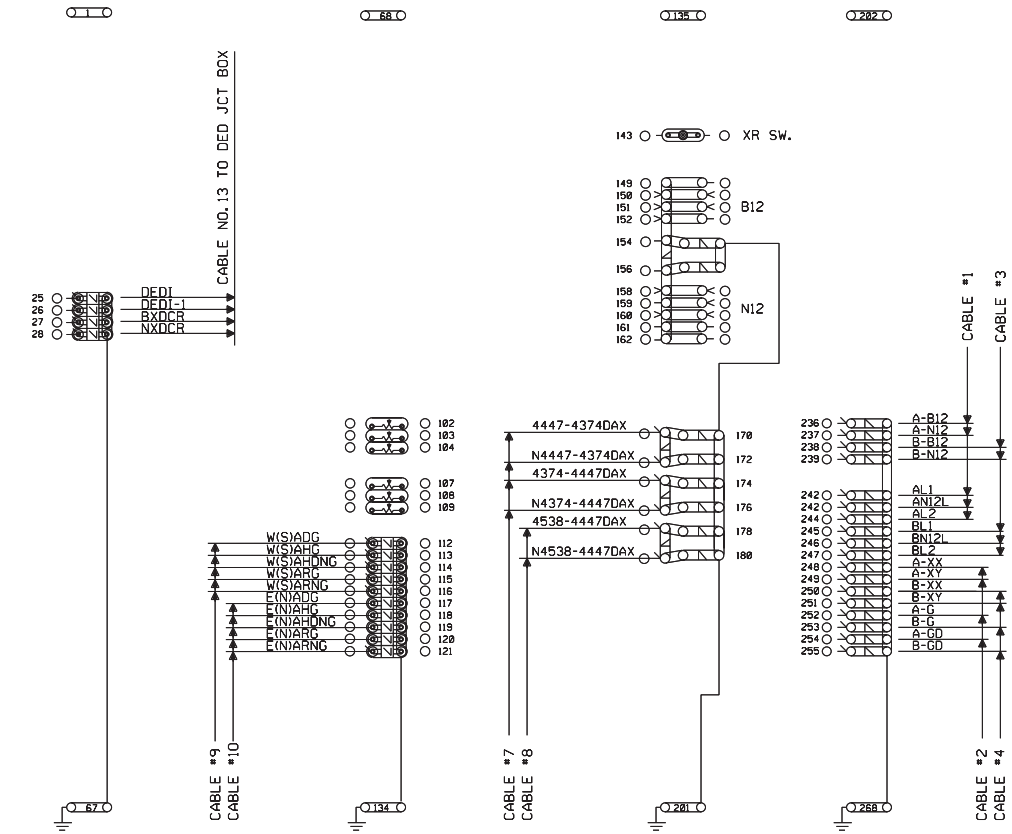

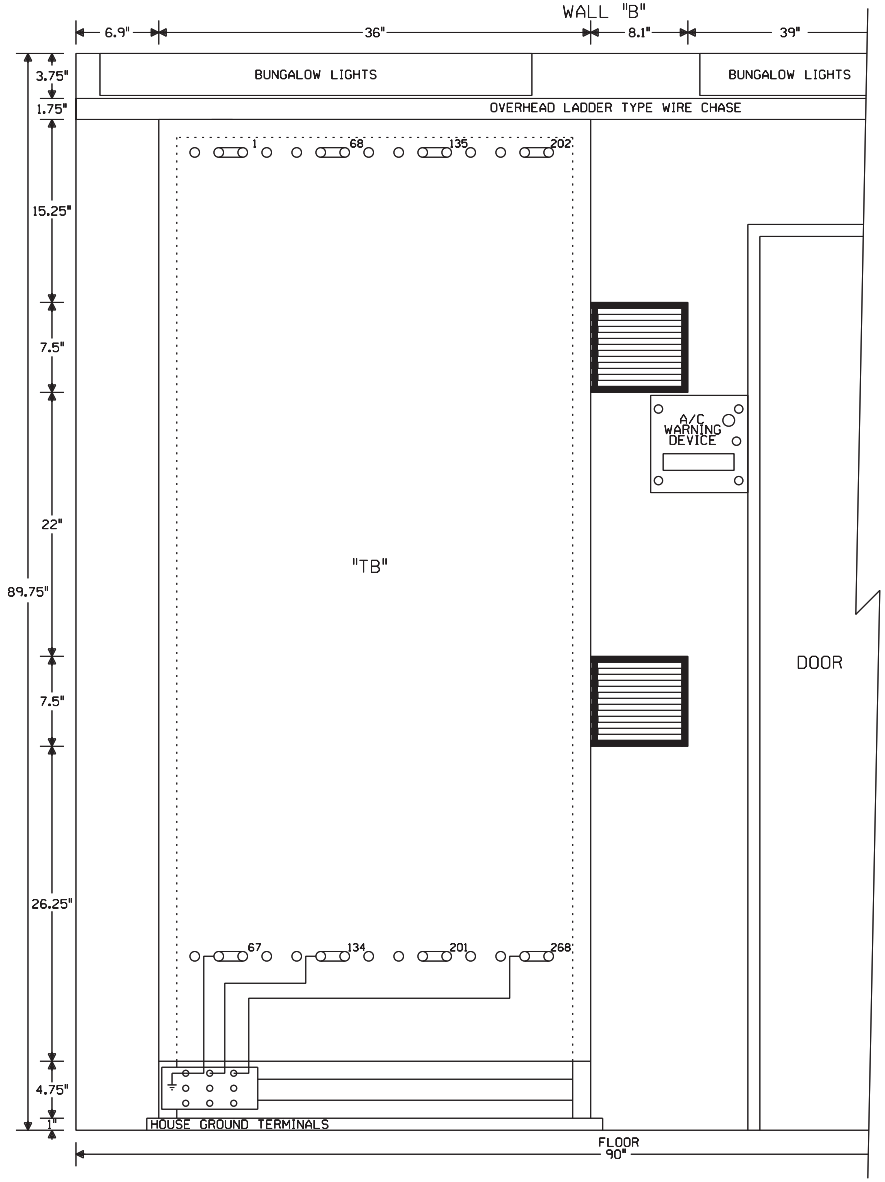

NOTE: ALL DIMENSIONS SHOWN ARE APPROXIMATE.

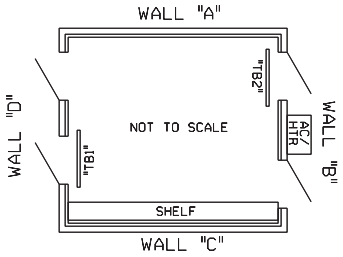

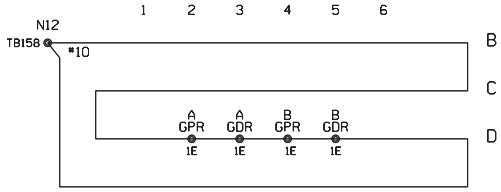

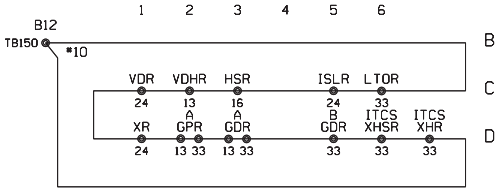

NEW SHEET

Designed: 3/13/13 TIER 4 ILLINOIS HIGH SPEED RAIL PROJECT PHASE 1 MP 134.90-146.50 Rec*: WO*: 15866 /MWK IS: / WIT/MJF	CIRCUIT MODIFICATIONS ARE NOT TO BE MADE WITHOUT AUTHORITY FROM THE OFFICE OF SIGNAL DESIGN	Date: 3/13/13 Des: WIT Chk: MWK AFE: 15866	**UNION PACIFIC RAILROAD** ATLANTA, ILLINOIS FIELD CROSSING SPRINGFIELD SUBDIVISION Office of Sr AVP Engineering - Signal/TCO Omaha, Nebraska	Sh.: 15 DOT 290968C MP: 144.47 ID: CSL14447.15X		

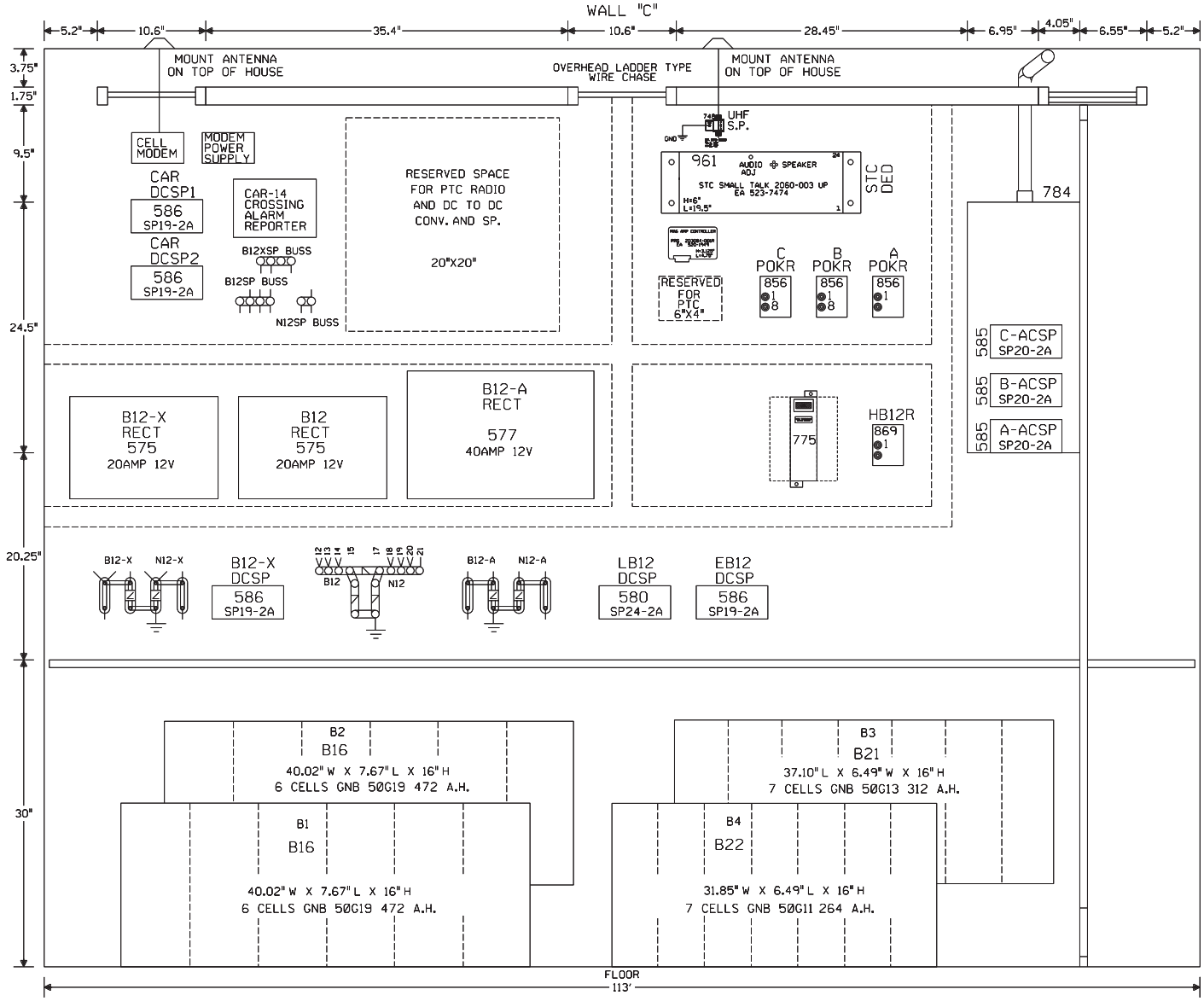

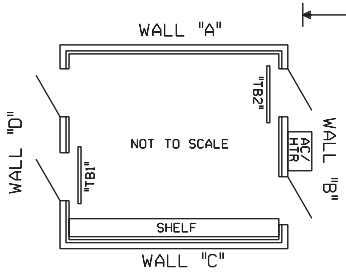

NOTE: ALL DIMENSIONS SHOWN ARE APPROXIMATE.

NEW SHEET

Designed: 3/13/13 TIER 4 ILLINOIS HIGH SPEED RAIL PROJECT PHASE 1 MP 134.90-146.50 Rec#: WO#: 15866 IS: /MWK / /WIT/MJF	CIRCUIT MODIFICATIONS ARE NOT TO BE MADE WITHOUT AUTHORITY FROM THE OFFICE OF SIGNAL DESIGN	Date: 3/13/13 Des: WIT Chk: MWK AFE: 15866	UNION PACIFIC RAILROAD ATLANTA, ILLINOIS FIELD CROSSING SPRINGFIELD SUBDIVISION Office of Sr AVP Engineering - Signal/TCO Omaha, Nebraska	Sh.: 16 DOT 290968C MP: 144.47 ID: CSL14447.16X	

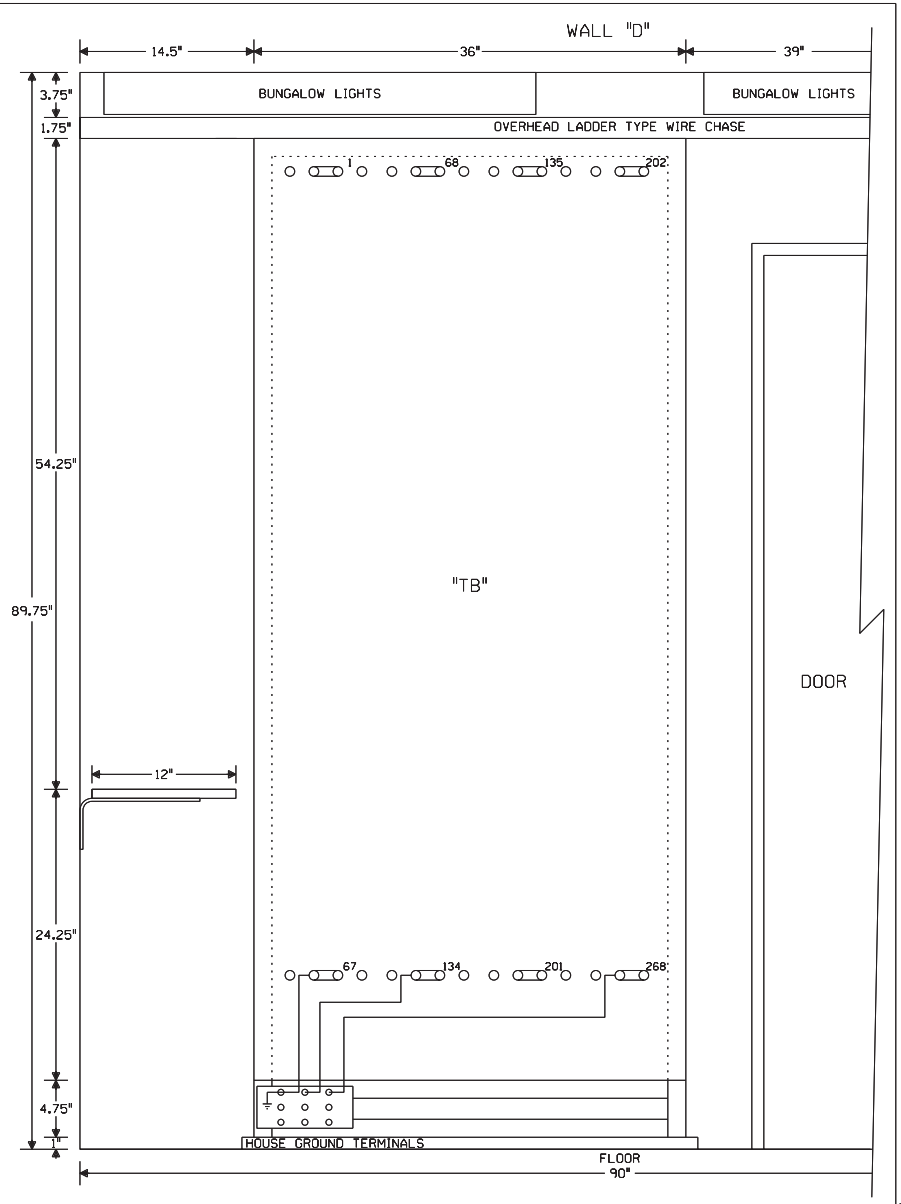

NOTE: ALL DIMENSIONS SHOWN ARE APPROXIMATE.

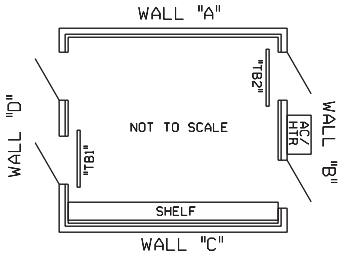

NEW SHEET

Designed: 3/13/13 TIER 4 ILLINOIS HIGH SPEED RAIL PROJECT PHASE 1 MP 134.90-146.50 Rec*: WO*: 15866 IS: /MWK / WIT/MJF	CIRCUIT MODIFICATIONS ARE NOT TO BE MADE WITHOUT AUTHORITY FROM THE OFFICE OF SIGNAL DESIGN	Date: 3/13/13 Des: WIT Chk: MWK AFE: 15866	**UNION PACIFIC RAILROAD** ATLANTA, ILLINOIS FIELD CROSSING SPRINGFIELD SUBDIVISION Office of Sr AVP Engineering - Signal/TCO Omaha, Nebraska	Sh.: 17 DOT 290968C MP: 144.47 ID: CSL14447.17X	

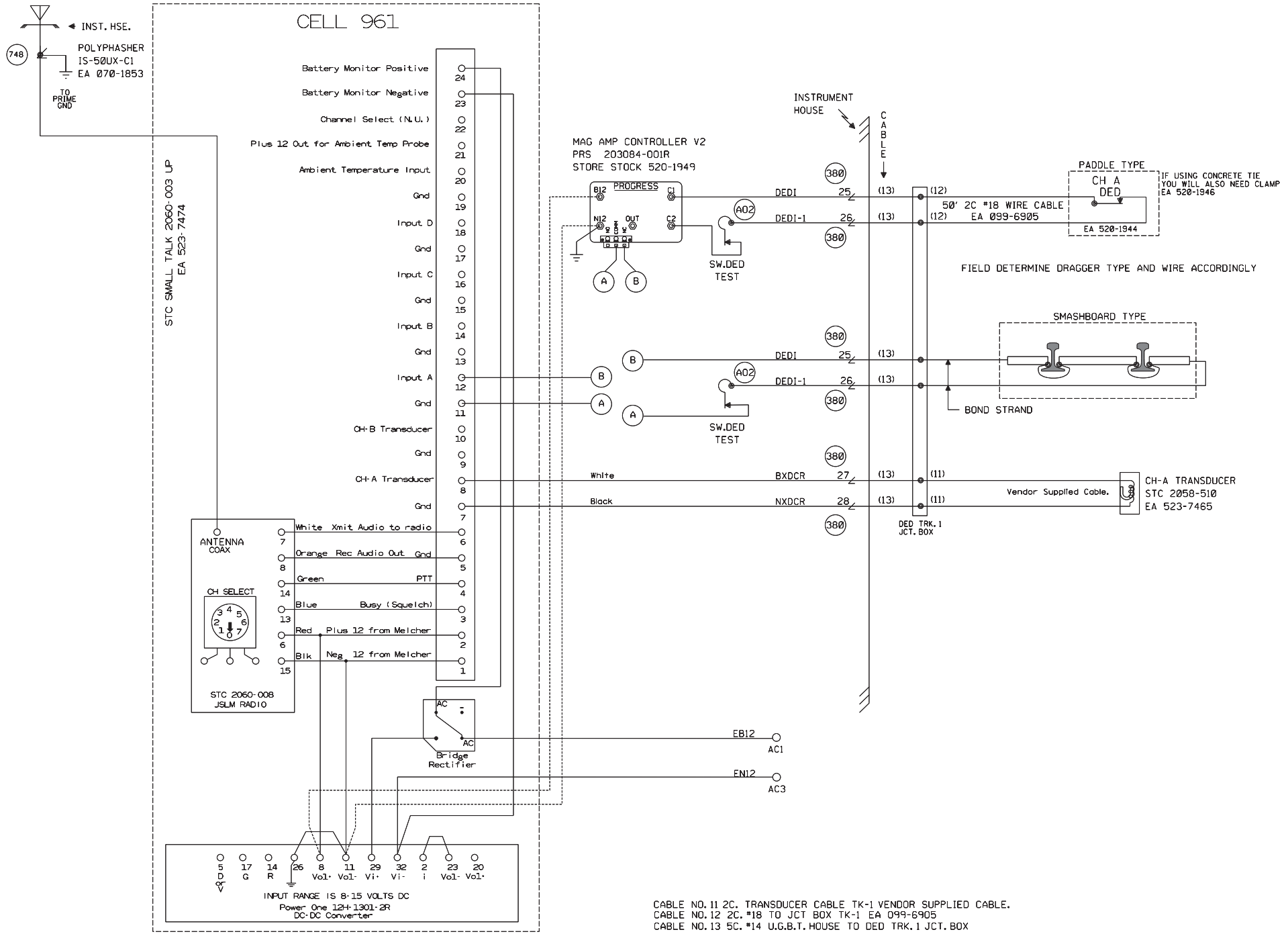

CABLE NO. 11 2C. TRANSDUCER CABLE TK-1 VENDOR SUPPLIED CABLE.
CABLE NO. 12 2C. #18 TO JCT BOX TK-1 EA 099-6905
CABLE NO. 13 5C. #14 U.G.B.T. HOUSE TO DED TRK. 1 JCT. BOX

NEW SHEET

Designed: 3/13/13 TIER 4 ILLINOIS HIGH SPEED RAIL PROJECT PHASE 1 MP 134.90-146.50 Rec#: WO#: 15866 IS: MWK / WIT / MJF	MODIFICATION LEVEL		CIRCUIT MODIFICATIONS ARE NOT TO BE MADE WITHOUT AUTHORITY FROM THE OFFICE OF SIGNAL DESIGN	Date: 3/13/13 Des: WIT Chk: MWK AFE: 15866	UNION PACIFIC RAILROAD ATLANTA, ILLINOIS FIELD CROSSING SPRINGFIELD SUBDIVISION Office of Sr AVP Engineering - Signal/TCO Omaha, Nebraska	Sh.: 18 DOT 290968C MP: 144.47 ID: CSL14447.18S
	Q.A. LAST LEVEL CHECKED	DU				
	LAST LEVEL MOD THIS TYPICAL	DU				
	LAST LEVEL BY DESIGNER	DU				
	CHANGED FROM TYPICAL?	Y				
	REV 10/3/13 1TMLHBINT.8S.DGN					

Minimum Program Steps Report

Location and SIN

DOT Number: 290968C
Milepost Number: 144.47
Site Name: Atlanta, IL

SIN: 762010010016 *

* Parameter is part of office check number calculation.

MCF and Template Selection

MCF Name: GCP-T6X-02-4.mcf
MCF Revision: 24
MCFCRC: 09FC363B

Template = 1D:3 Uni pairs (OCCN) *

* Parameter is part of office check number calculation.

Minimum Program Steps

TEMPLATE: track 1-Uni, Island
Track 1 : GCP Frequency = 211 Hz (Field,TCN)
Track 1 : Approach Distance = 3670 ft (Set in Field,TCN)
Track 1 : Prime Warning Time = 44 sec (OCCN) *
Track 1 : Prime UAX = IP (OCCN) *
Track 1 : Prime UAX Pickup = 15 sec (OCCN) *
Track 1 : GCP Transmit Level = Medium (Set in Field,TCN)
Track 1 : Uni/Bi/Sim-Bidirnl = Sim. Bidirnl (OCCN) *
Track 1 : Isl Frequency = 15.2 kHz (Set in Field)
Track 1 : Island Distance = 132 ft (Set in Field,TCN)

TEMPLATE: track 2-Uni,No Island
Track 2 : GCP Frequency = 86 Hz (Field,TCN)
Track 2 : Approach Distance = 4584 ft (Set in Field,TCN)
Track 2 : Prime Warning Time = 44 sec (OCCN) *
Track 2 : GCP Transmit Level = Medium (Set in Field,TCN)

TEMPLATE: track 2 Daxes
Track 2 : Dax A Used = Yes (OCCN) *
Track 2 : Dax A Warning Time = 37 sec (OCCN) *
Track 2 : Dax A Offset Distance = 3802 ft (Set in Field)

TEMPLATE: AND 1 XR
AND 1 Enable Used = Yes (OCCN) *

TEMPLATE: SSCC
SSCC 1 : Lamp Neutral Test = Off (Set in Field)
SSCC 2 : Lamp Neutral Test = Off (Set in Field)

TEMPLATE: OOS
OOS Control = OOS IPs (OCCN) *
T2 OOS Control = OOS Input 1 (OCCN) *

TEMPLATE: OP assignment 1
OUT 1.1 = AND 1 XR (OCCN) *
OUT 1.2 = T1 Island (OCCN) *
OUT 2.1 = T2 Dax A (OCCN) *

TEMPLATE: IP assignment 1
IN 1.1 = AND 1 XR Enable (OCCN) *
IN 1.2 = Out Of Service IP 1 (OCCN) *
IN 2.1 = GP 1.1 (OCCN) *

TEMPLATE: IP assignment SSCC
IN 7.1 = AND 1 XR Enable (OCCN) *
IN 8.4 = T1 Prime UAX (OCCN) *
IN 8.5 = T1 Prime UAX (OCCN) *

ISLAND: track 1
Track 1 : Pickup Delay (2s +) = 2 sec (OCCN) *

ADVANCED: site options
Daylight Savings = Off (Set in Field)

SSCC: 1
SSCC-1 Gate Delay = 10 sec (OCCN) *

SSCC: 2
SSCC-2 Gate Delay = 10 sec (OCCN) *

SEAR: slot 1-4 inputs
IN 2.2 = 3 Vehicle Detect (OCCN) *

SEAR: slot 7-8 inputs
IN 8.1 = General 4 (OCCN) *
IN 8.2 = General 3 (OCCN) *

* Parameter is part of office check number calculation.

Check Numbers

Office Check Number: 33FABF4F
Config. Check Number: 458C4E6B
(Based on MCF Revision 24)

Parameters not part of office check number calculation:

Track 1 : GCP Frequency = 211 Hz
Track 1 : Approach Distance = 3670 ft (Set in Field)
Track 1 : GCP Transmit Level = Medium (Set in Field)
Track 1 : Isl Frequency = 15.2 kHz
Track 1 : Island Distance = 132 ft (Set in Field)
Track 2 : GCP Frequency = 86 Hz
Track 2 : Approach Distance = 4584 ft (Set in Field)
Track 2 : GCP Transmit Level = Medium (Set in Field)
Track 2 : Dax A Offset Distance = 3802 ft (Set in Field)
SSCC 1 : Lamp Neutral Test = Off (Set in Field)
SSCC 2 : Lamp Neutral Test = Off (Set in Field)
Daylight Savings = Off (Set in Field)

Comments

<none>

Configuration Package File

Filename: CSL14447_290968C.pac
Path: C:\PAC File\
Date/Time: 4/21/2014 11:11:54