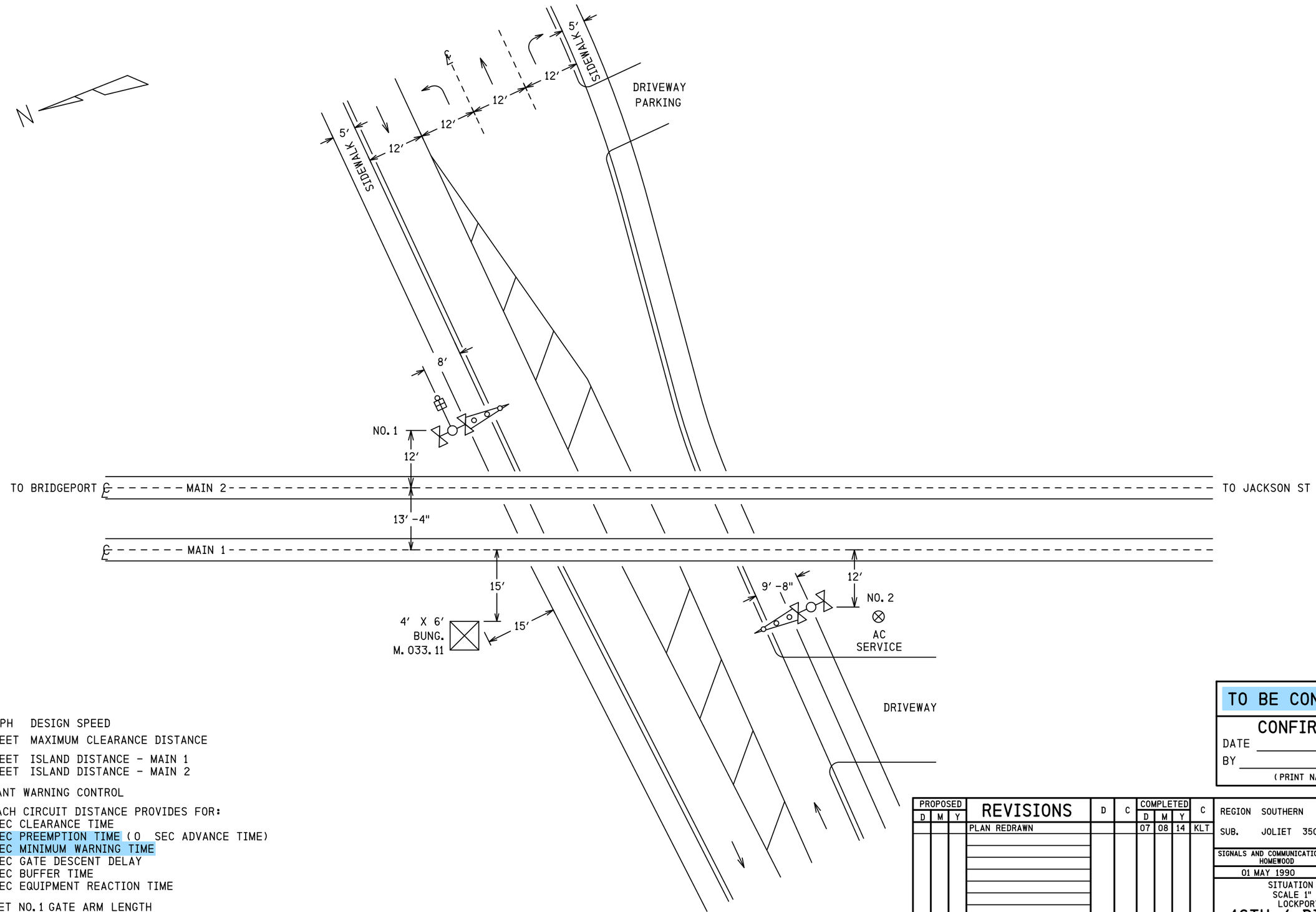

NOTES

1) 79 MPH DESIGN SPEED
2) 55 FEET MAXIMUM CLEARANCE DISTANCE
3) 120 FEET ISLAND DISTANCE - MAIN 1
   120 FEET ISLAND DISTANCE - MAIN 2
4) CONSTANT WARNING CONTROL
5) APPROACH CIRCUIT DISTANCE PROVIDES FOR:
   2 SEC CLEARANCE TIME
   25 SEC PREEMPTION TIME (0 SEC ADVANCE TIME)
   25 SEC MINIMUM WARNING TIME
   4 SEC GATE DESCENT DELAY
   10 SEC BUFFER TIME
   5 SEC EQUIPMENT REACTION TIME
6) 16 FEET NO. 1 GATE ARM LENGTH
   16 FEET NO. 2 GATE ARM LENGTH

TO BE CONFIRMED

CONFIRMED
DATE _____
BY _____
(PRINT NAME)

PROPOSED D	PROPOSED M	PROPOSED Y	REVISIONS	D	C	COMPLETED D	COMPLETED M	COMPLETED Y	C
			PLAN REDRAWN			07	08	14	KLT

REGION SOUTHERN
SUB. JOLIET 350
CN

SIGNALS AND COMMUNICATIONS HOMEWOOD
01 MAY 1990
DES. CN
CH. CN

SITUATION SKETCH
SCALE 1" = 20′
LOCKPORT, IL

16TH / DIVISION

JOL-033.11-0

DOT#289 756C

7

SIEMENS INDUSTRY INC
LOUISVILLE DIVISION, LOUISVILLE, KY

Jol-033.11-0.dgn
14-AUG-2014

REVISIONS			
NO.	DATE	BY	DESCRIPTION	APP. BY
1	07/05/13	APL	SSCCIV UPGRADE	BJW
2				
3				
4				
5				

FLASHING LIGHT UNITS ALIGNMENT TABLE

PRIMARY FRONT LIGHTS FOR VEHICLES							
SIG #	LIGHT #	ROUNDEL		ROAD SPEED	MINIMUM DISTANCE	RECOMMENDED DISTANCE	ALIGNMENT DISTANCE
		SIZE	TYPE	MPH	FT	FT	FT
1	A, B	"		25	215	325	
2	C, D	"		25	215	325	
BACK LIGHTS FOR VEHICLES							
SIG #	LIGHT #	ROUNDEL		ROAD SPEED	MINIMUM DISTANCE	RECOMMENDED DISTANCE	ALIGNMENT DISTANCE
		SIZE	TYPE	MPH	FT	FT	FT
1	A1, B1	"		N/A	N/A	N/A	50
2	C1, D1	"		N/A	N/A	N/A	50

NOTE
FIELD IS TO PROVIDE THE ACTUAL ALIGNMENT DISTANCE AS DETERMINED BY
SCP-706: ROAD CROSSING DEVICE LIGHT UNIT ALIGNMENT PROCEDURES

07/08/14 REVISION

CONTENT	SHEET #
SITUATION SKETCH	0
TRACK & GCP CONNECTIONS	01
POWER & CIRCUITS	02
GCP APPLICATION	03
RECORDER CIRCUITS	04
SSCCIV CROSSING CONTROLLER LIGHTING SURGE PANEL #1	05
SSCCIV PROGRAM DATA	05A
GATE CIRCUITS	05X
GATE CONTROLS	06

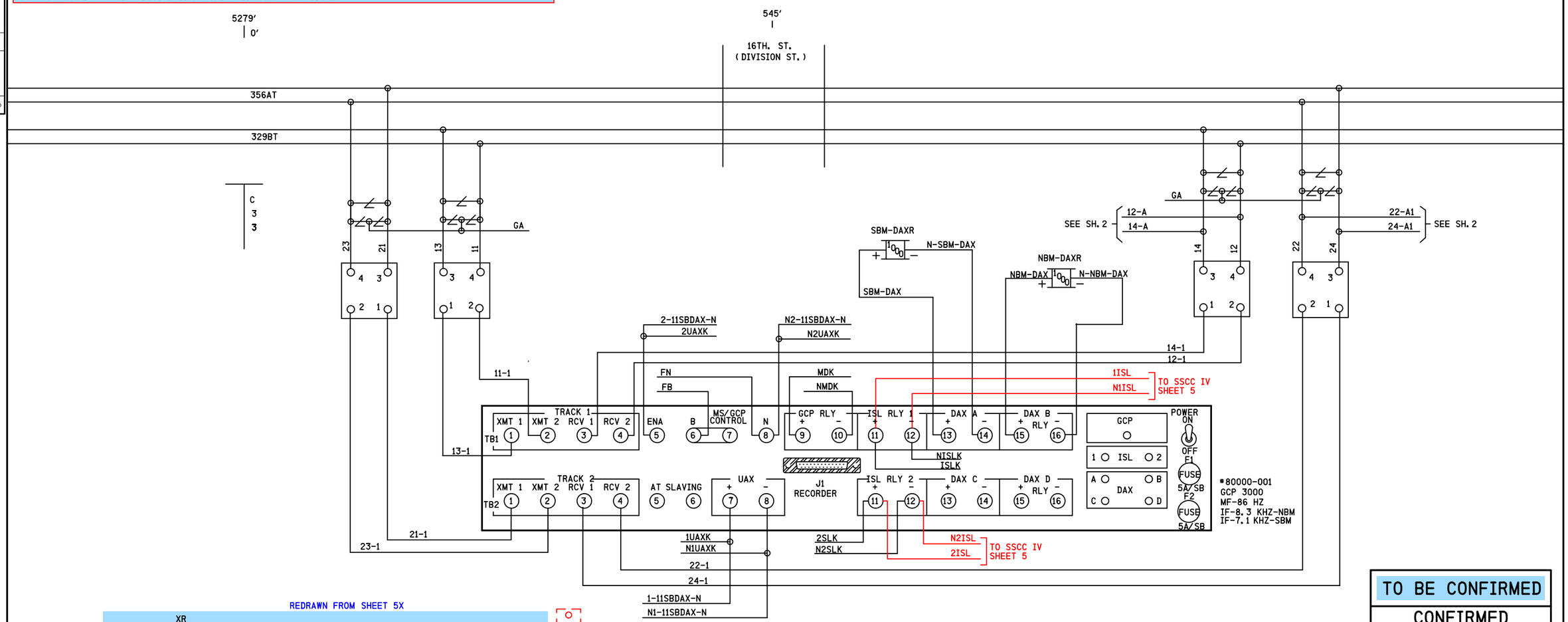

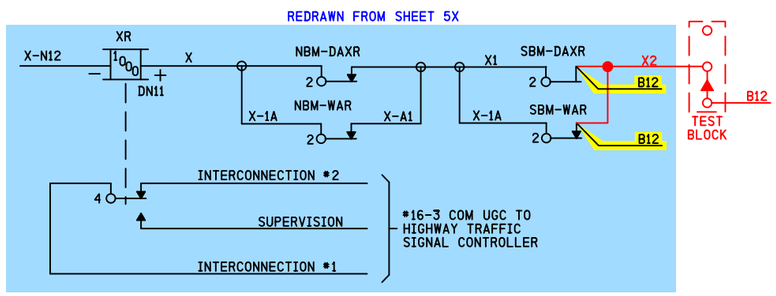

TO BE CONFIRMED

CONFIRMED
DATE _____
BY _____
(PRINT NAME)

DENOTES PROPOSAL 13-0463
REVISION 07/08/14

SII 07 AUG 2014
PROPOSED
DESIGN NO. 13-0463
RED-IN YELLOW-OUT
AS INSTALLED
DATE _____
BY _____
(PRINT NAME)

IRC 07 MAY 2013
PROPOSED
DESIGN NO. 13-0136
RED-IN YELLOW-OUT
AS INSTALLED
DATE _____
BY _____
(PRINT NAME)

PROPOSED D	M	Y	REVISIONS	D	C	COMPLETED D	M	Y	C
			AS INSTALLED			07	05	13	APL
07	05	13	SSCC IV UPGRADE	APL	BJW				
07	08	14	M. 32.89 UPGRADE	NAD	MRB				

REGION SOUTHERN
SUB. JOLIET 350
SIGNALS AND COMMUNICATIONS HOMEWOOD
20 JANUARY 1998
DES. WJL
CH.
TRACK & GCP CONNECTIONS
LOCKPORT, IL
16TH / DIVISION
JOL-033.11-01
6

DOT# 289 756C

INVENSYS RAIL CORPORATION

DES. : APL	DATE: 07-05-13	JOB NO. :	
CKD. : BJW	ISSUE DATE: N/A	EST. NO. : JXXD03631	
DRN. : APL	PLAN NO. : N/A	SHEET 1 OF 6	
P TIME: 11:50	P DATE: 14-AUG-2014	CAD ID. : JOL-033.11-01	

INVENSYS RAIL CORP.
LOUISVILLE DIVISION, LOUISVILLE, KY

[01-033.11-01.dgn
14-AUG-2014

REVISIONS				
NO.	DATE	BY	DESCRIPTION	APP. BY
1	07/05/13	APL	SSCCIV UPGRADE	BJW
2				
3				
4				
5				

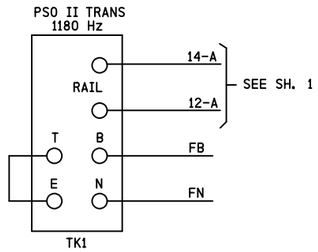

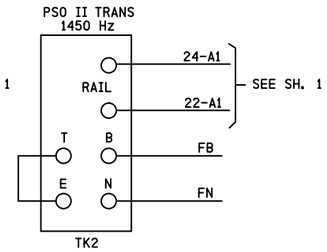

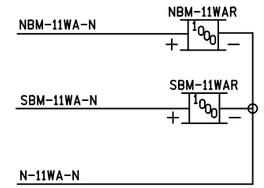

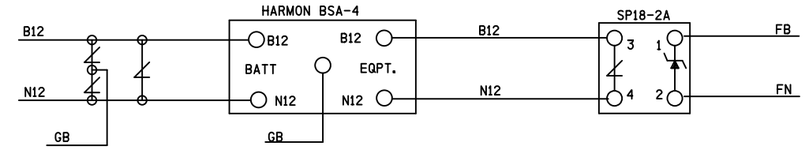

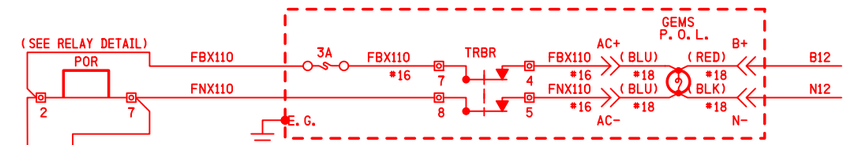

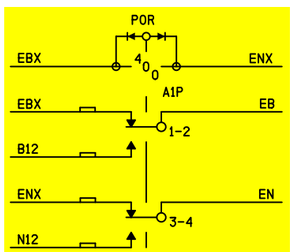

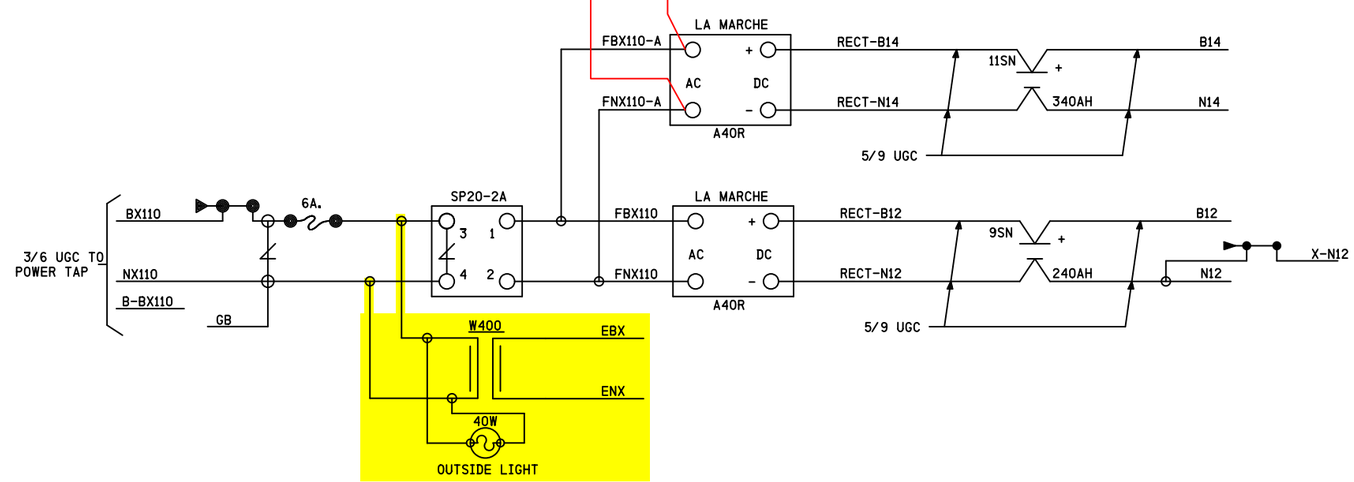

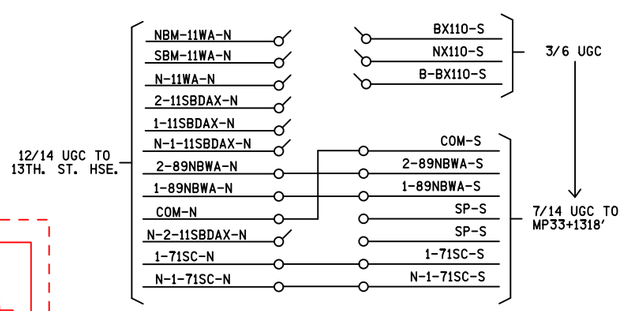

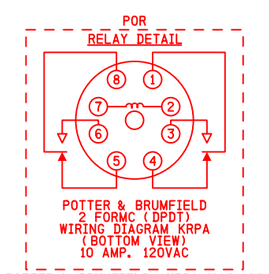

POTTER & BRUMFIELD *KRPA-11AG-120
120V-DPDT RELAY
8 PIN SOCKET *27E122
HOLD DOWN SPRING *20C176

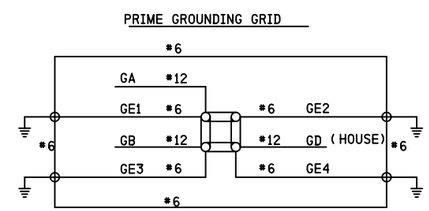

IRC 07 MAY 2013

PROPOSED
DESIGN NO. 13-0136
RED-IN YELLOW-OUT

AS INSTALLED
DATE _____
BY _____
(PRINT NAME)

PROPOSED D	PROPOSED M	PROPOSED Y	REVISIONS	D	C	COMPLETED D	COMPLETED M	COMPLETED Y	C
			AS INSTALLED			07	05	13	APL
07	05	13	SSCC IV UPGRADE	APL	BJW				

REGION SOUTHERN
SUB. JOLIET 350
SIGNALS AND COMMUNICATIONS HOMEWOOD
20 JANUARY 1998
DES. WJL
CH.
POWER & CIRCUITS
LOCKPORT, IL
16TH / DIVISION
JOL-033.11-02

DOT# 289 756C

INVENSYS RAIL CORPORATION
DES. : APL | DATE: 07-05-13 | JOB NO. :
CKD. : BJW | ISSUE DATE: N/A | EST. NO. :JXXD03631
DRN. : APL | PLAN NO. :N/A | SHEET 2 OF 6
P TIME:11:50 | P DATE: 14-AUG-2014 | CAD ID. : JOL-033.11-02

INVENSYS RAIL CORP.
LOUISVILLE DIVISION, LOUISVILLE, KY

Jol-033.11-02.dgn
14-AUG-2014

REVISIONS				
NO.	DATE	BY	DESCRIPTION	APP. BY
1	07/05/13	APL	SSCCIV UPGRADE	BJW
2				
3				
4				
5				

Equipment: 3000 ■ 3000D2 ☐ 3008 ☐ 3008D2 ☐ 3000ND ☐ 3000ND2 ☐

3000 GCP APPLICATION HISTORY CARD

Unit/Serial No: 246 Crossing No: IC-33.11 - AO

Crossing Name: 16TH. STREET (DIVISION ST.) City: LOCKPORT State: IL

Date Installed: APRIL 19, 1990 Weather:

Island Frequency: T1: 8.3 kHz T2: 7.1 kHz

PROGRAMMING HISTORY

	Initial Programmed Value Date: 4-19-90	Program Change Date: 8-7-14	Program Change Date:
■ press PROGRAM key			
NUMBER OF TRACKS (Number of transceiver modules, 1 or 2)	1 ☐ 2 ■	1 ☐ 2 ■	1 ☐ 2 ☐
FREQUENCY (MS/GCP) _GCP_ _	86 Hz	211 Hz	Hz
UNIDIRECTIONAL/BIDIRECTIONAL _ T1:	UNI ☐ BI ■	UNI ☐ BI ☐	UNI ☐ BI ☐
T2:	UNI ☐ BI ■	UNI ☐ BI ☐	UNI ☐ BI ☐
XMIT LEVEL _ _ _ _ _ _ _ _ _ . T1:	HI ■ MED ☐	HI ☐ MED ☐	HI ☐ MED ☐
T2:	HI ■ MED ☐	HI ☐ MED ☐	HI ☐ MED ☐
PREDICTOR/MOTION SENSOR _ _ _ . T1:	PRED ■ MS ☐	PRED ☐ MS ☐	PRED ☐ MS ☐
T2:	PRED ■ MS ☐	PRED ☐ MS ☐	PRED ☐ MS ☐
WARNING TIME SELECTED _ _ _ _ T1:	35 sec.	sec.	sec.
T2:	35 sec.	sec.	sec.
APPROACH DISTANCE SELECTED _ T1:	4635 ft.	ft.	ft.
T2:	4635 ft.	ft.	ft.
APPROACH DISTANCE COMPUTED _ T1:	4767 ft.	ft.	ft.
T2:	5726 ft.	ft.	ft.
UAX PICKUP DELAY (UAX1) (0 = OFF)	50 sec.	sec.	sec.
ENA/UAX2 DELAY (0 = ENA)	25 sec.	sec.	sec.
ISLAND DISTANCE (between Island track wire connections) T1:	120 ft.	ft.	ft.
T2:	120 ft.	ft.	ft.
NUMBER OF DAX'S _ _ _ _ _ _ _	0 ☐ 1 ☐ 2 ■ 3 ☐ 4 ☐	0 ☐ 1 ☐ 2 ☐ 3 ☐ 4 ☐	0 ☐ 1 ☐ 2 ☐ 3 ☐ 4 ☐
DAX A TRACK ASSIGNMENT _ _ _	T1 ■ T2 ☐	T1 ☐ T2 ☐	T1 ☐ T2 ☐
DAX A DISTANCE (0=PREEMPT) _	0 ft.	ft.	ft.
DAX A WARNING TIME _ _ _ _ .	35 sec.	sec.	sec.
DAX B TRACK ASSIGNMENT _ _ _	T1 ☐ T2 ■	T1 ☐ T2 ☐	T1 ☐ T2 ☐
DAX B DISTANCE (0=PREEMPT) _	0 ft.	ft.	ft.
DAX B WARNING TIME _ _ _ _ .	35 sec.	sec.	sec.
DAX C TRACK ASSIGNMENT _ _ _	T1 ☐ T2 ☐	T1 ☐ T2 ☐	T1 ☐ T2 ☐
DAX C DISTANCE (0=PREEMPT) _	ft.	ft.	ft.
DAX C WARNING TIME _ _ _ _ .	sec.	sec.	sec.
DAX D TRACK ASSIGNMENT _ _ _	T1 ☐ T2 ☐	T1 ☐ T2 ☐	T1 ☐ T2 ☐
DAX D DISTANCE (0=PREEMPT) _	ft.	ft.	ft.
DAX D WARNING TIME _ _ _ _ .	sec.	sec.	sec.

PROGRAMMING HISTORY (continued)

	Initial Programmed Value Date: 4-19-90	Program Change Date:	Program Change Date:
SLAVING MASTER/SLAVE _ _ _ _ _ _	MASTER ■ SLAVE ☐	MASTER ☐ SLAVE ☐	MASTER ☐ SLAVE ☐
PASSWORD ENABLED _ _ _ _ _ _ _ _ .	DISABLED ■	DISABLED ☐	DISABLED ☐
	ENABLED ☐	ENABLED ☐	ENABLED ☐
RECORDER INSTALLED _ _ _ _ _ _ _	NOT INSTALLED ☐	NOT INSTALLED ☐	NOT INSTALLED ☐
	INSTALLED ■	INSTALLED ☐	INSTALLED ☐
RS-232-C BAUD RATE _ _ _	9600 bps	bps	bps
RS-232-C DATA BITS _ _ _ .	7 ☐ 8 ■	7 ☐ 8 ☐	7 ☐ 8 ☐
RS-232-C STOP BITS _ _ _ .	1 ■ 2 ☐	1 ☐ 2 ☐	1 ☐ 2 ☐
RS-232-C PARITY _ _ _ _ _	NONE ■ MARK ☐	NONE ☐ MARK ☐	NONE ☐ MARK ☐
	ODD ☐ SPACE ☐	ODD ☐ SPACE ☐	ODD ☐ SPACE ☐
(NOTE: SET DATE & TIME AS REQUIRED)	EVEN ☐	EVEN ☐	EVEN ☐
DATE (e.g., 4 NOV 1993) _			
TIME (e.g., 11:25:43 AM) _			
DAYLIGHT SAVINGS _ _ _ _ _	ON ☐ OFF ■	ON ☐ OFF ☐	

EXPANDED PROGRAMMING HISTORY (Function Mode, Optional)

	Initial Programmed Value Date: 4-19-90	Program Change Date:	Program Change Date:
■ press FUNCTION key			
SWITCH TO MS (enter EZ value) _ _	T1: 10 EZ.	EZ.	sec.
	T2: 10 EZ.	EZ.	sec.
TRANSFER DELAY MS TO GCP (0=OFF) _	T1: 0 ft.	ft.	ft.
	T2: 0 ft.	ft.	ft.
PRIME PREDICTION OFFSET (0=OFF) _	T1: 0 ft.	ft.	ft.
	T2: 0 ft.	ft.	ft.
PICKUP DELAY PRIME _ _ _ _ _ _	30 sec.	sec.	sec.
PICKUP DELAY DAX A _ _ _ _ _ _	30 sec.	sec.	sec.
PICKUP DELAY DAX B _ _ _ _ _ _	30 sec.	sec.	sec.
PICKUP DELAY DAX C _ _ _ _ _ _	sec.	sec.	sec.
PICKUP DELAY DAX D _ _ _ _ _ _	sec.	sec.	sec.
COMPENSATION VALUE _ _ _ _ _ _	T1: 1300 sec.	sec.	sec.
COMPENSATION VALUE _ _ _ _ _ _	T2: 1300 sec.	sec.	sec.

CALIBRATION HISTORY RE-CALIBRATED 8-8-94

		FULL TRACK (NO HARDWIRE SHUNT)	FULL TRACK (HARDWIRE SHUNT AT TERMINATION)	50 PERCENT TRACK (HARDWIRE SHUNT) NO LINEARIZATION	LINEARIZATION STEP +/-	LINEARIZATION EZ
		/	/	/		
SBM	SOUTH EZ/EX	99 / 91	86 / 88	38 / 77	+10	43
		/	/	/		
NBM	NORTH EZ/EX	99 / 92	82 / 90	37 / 80	+8	41

SII 07 AUG 2014

PROPOSED
DESIGN NO. 13-0463
RED-IN YELLOW-OUT

AS INSTALLED
DATE _____
BY _____
(PRINT NAME)

PROPOSED D	PROPOSED M	PROPOSED Y	REVISIONS	D	C	COMPLETED D	COMPLETED M	COMPLETED Y	C
			AS INSTALLED			07	05	13	APL
07	08	14	M.32.89 UPGRADE	NAD	MRB				

REGION SOUTHERN
SUB. JOLIET 350
CN

SIGNALS AND COMMUNICATIONS HOMEWOOD
DES. WJL
CH.
20 JANUARY 1998
GCP APPLICATION
LOCKPORT, IL
16TH / DIVISION
JOL-033.11-03

DOT# 289 756C

INVENSYS RAIL CORPORATION			
DES.: APL	DATE: 07-05-13	JOB NO.:	
CKD.: BJW	ISSUE DATE: N/A	EST. NO.: JXXD03631	
DRN.: APL	PLAN NO.: N/A	SHEET 3 OF 6	
P TIME: 11:50	P DATE: 14-AUG-2014	CAD ID.: JOL-033.11-03	

INVENSYS RAIL CORP.
LOUISVILLE DIVISION, LOUISVILLE, KY

jol-033.11-03.dgn
14-AUG-2014

REVISIONS				
NO.	DATE	BY	DESCRIPTION	APP. BY
1	07/05/13	APL	SSCCIV UPGRADE	BJW
2				
3				
4				
5				

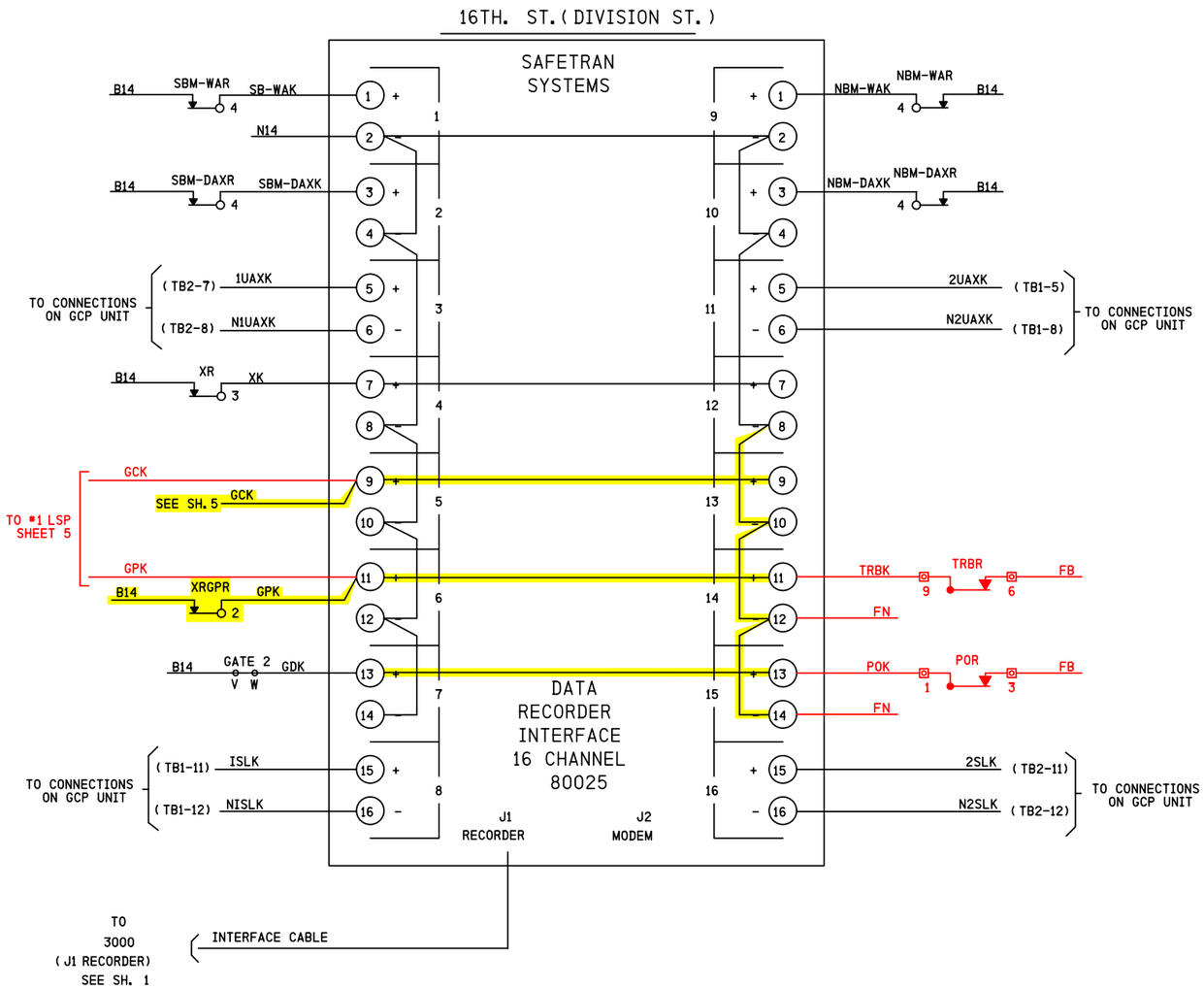

IRC 07 MAY 2013

PROPOSED
DESIGN NO. 13-0136
RED-IN YELLOW-OUT

AS INSTALLED
DATE
BY
(PRINT NAME)

PROPOSED D	M	Y	REVISIONS	D	C	COMPLETED D	M	Y	C
			AS INSTALLED			07	05	13	APL
07	05	13	SSCC IV UPGRADE	APL	BJW				

REGION SOUTHERN
SUB. JOLIET 350

SIGNALS AND COMMUNICATIONS HOMEWOOD
20 JANUARY 1998
DES. WJL
CH.

RECORDER CIRCUITS

LOCKPORT, IL
16TH / DIVISION

JOL-033.11-04

DOT# 289 756C

INVENSYS RAIL CORPORATION			
DES.: APL	DATE: 07-05-13	JOB NO.:	
CKD.: BJW	ISSUE DATE: N/A	EST. NO.: JXXD03631	
DRN.: APL	PLAN NO.: N/A	SHEET 4 OF 6	
P TIME: 11:50	P DATE: 14-AUG-2014	CAD ID.: JOL-033.11-04	

INVENSYS RAIL CORP.
LOUISVILLE DIVISION, LOUISVILLE, KY

JOL-033.11-04.dgn
14-AUG-2014

REVISIONS				
NO.	DATE	BY	DESCRIPTION	APP. BY
1	07/05/13	APL	SSCCIV UPGRADE	BJW
2				
3				
4				
5				

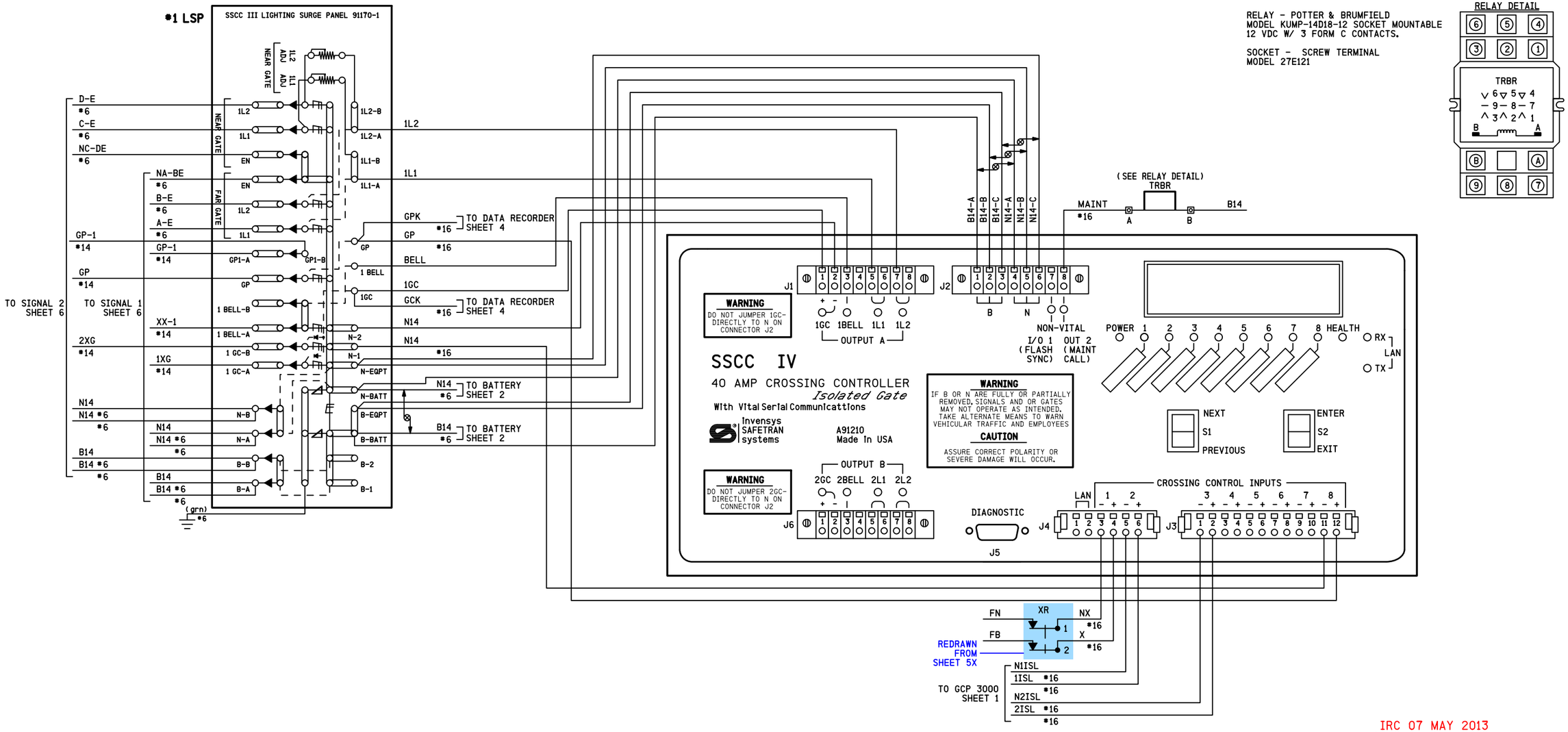

IRC 07 MAY 2013

PROPOSED
DESIGN NO. 13-0136
RED-IN YELLOW-OUT

AS INSTALLED
DATE _____
BY _____
(PRINT NAME)

NOTES

1) DENOTES TWISTED PAIRS.
2) ALL WIRINGS TO BE #10 AWG MINIMUM UNLESS OTHERWISE NOTED.
3) DENOTES LIGHTNING ARRESTER TYPE: (SAFETRAN #4000-44585-001X)
4) DENOTES EQUALIZER TYPE: (SAFETRAN #4000-44700-001X)
5) LAMP LOAD CALCULATED USING 18 WATT BULBS.

PROPOSED			REVISIONS	D	C	COMPLETED			C
D	M	Y				D	M	Y	

REGION SOUTHERN
SUB. JOLIET 350

SIGNALS AND COMMUNICATIONS HOMEWOOD
07 MAY 2013
DES. APL
CH. BJW

SSCCIV CROSSING CONTROLLER
LIGHTING SURGE PANEL #1
LOCKPORT, IL
16TH / DIVISION

JOL-033.11-05

DOT# 289 756C

INVENSYS RAIL CORPORATION

DES.: APL	DATE: 07-05-13	JOB NO.:	
CKD.: BJW	ISSUE DATE: N/A	EST. NO.: UXXD03631	
DRN.: APL	PLAN NO.: N/A	SHEET 5 OF 6	
P TIME: 11:50	P DATE: 14-AUG-2014	CAD ID.: JOL-033.11-05	

INVENSYS RAIL CORP.
LOUISVILLE DIVISION, LOUISVILLE, KY

JOL-033.11-05.dgn
14-AUG-2014

REVISIONS				
NO.	DATE	BY	DESCRIPTION	APP. BY
1	07/05/13	APL	SSCCIV UPGRADE	BJW
2				
3				
4				
5				

CROSSING CONTROLLER SSCCIV 40-AMPERE UNIT, A91210

PROGRAM	NOTES	INITIAL SETTING BY: _____ DATE: _____
FLASH RATE:	30-70 FLASHES/MINUTE DEFAULT = 50	55 FLASHES/MINUTE
GATES USED:	YES/NO DEFAULT = YES	☑ YES ☐ NO
1 GC DELAY:	3-20 SEC., DEFAULT = 4	4 SECONDS
2 GC DELAY (40 AMP UNIT):	3-20 SEC., DEFAULT = 4	4 SECONDS
GATE RISING BELL:	ON/OFF, DEFAULT = ON	☐ ON ☑ OFF
ENABLED INPUTS:	1 THRU 7 ONLY	☑1 ☑2 ☑3 ☐4 ☐5 ☐6 ☐7
GC2/I7:	GC2 NORMAL, I7 = NORMAL GC2 INVERTED, I7 = NORMAL GC2 PRMT RELAY, I7 = PRMT HEALTH GC2 BEACONFDBK	☑ NORMAL ☐ INVERTED ☐ PRE-EMPT SIM ☐ PRE-EMPT ADV ☐ BEACON
INPUT 7	INPUT, PRMT HLTH, TEST SW	☐ IN ☐ HEALTH ☐ TEST SW
TEST SW 2TRKDSTK ONLY	ACTIVATE, ACT & STICK RELEASE	☐ ACTIVATE ☐ ACT & REL
ADV PRE-EMPT TIME (40A):	1-99 SEC., DEFAULT = 1	N/A SECONDS
MIN ACTIVATION TIME:	0-99 SEC., DEFAULT = 20	20 SECONDS
STICK RELEASE TIME:	5-120 MIN., DEFAULT = 15	N/A MINUTES
BEACON PICK-UP DELAY	5-600 SEC., DEFAULT = 20	N/A SECONDS
SUP ISLAND TIME:	5-20 MIN., DEFAULT = 20	N/A MINUTES
ENABLED OUTPUTS: (40 amp only)	DEFAULT = A + B	☐ A + B ☑ A ☐ B
DAYLIGHT SAVINGS:	DEFAULT = DISABLED	☑ ENABLED ☐ DISABLED
DATE:	N/A	☐ DATE SET
TIME:	24-FORMAT	☐ TIME SET
PASSWORD:	DEFAULT = DISABLED	☐ ENABLED ☑ DISABLED
CONFIGURE		
LOS TIMERS:	0-20 SECONDS, INPUTS 1-7 ONLY DEFAULT = 0	1: 0 SEC 5: 0 SEC 2: 0 SEC 6: 0 SEC 3: 0 SEC 7: 0 SEC 4: 0 SEC
MCF:		MCF: BASICPLS CRC: 731AF326
ATCS ADDRESS:	DEFAULT = 700000000000	
LOW BATTERY:	9.0-15.0 VOLTS, OR DISABLED DEFAULT = DISABLED	☑ DISABLED ☐ ENABLED _____ VOLTS
AUX I/O:	DEFAULT = NONVITAL OUTPUT	☑ NV OUTPUT ☐ FLASH SYNC IN ☐ FLASH SYNC OUT
DETECT LAMP NEUTRAL WIRE	DEFAULT = YES	☐ YES ☑ NO
TEST CONFIGURE		
LAMP TEST CANCEL TIMER:	1-15 MINUTES, DEFAULT = 5	5 MINUTES
LAMP TEST DELAY TIMER:	30-120 SEC., DEFAULT = 30	30 SEC.
LAMP TEST ON TIMER:	15-60 SEC., DEFAULT = 15	15 SEC.

STANDARD SETUP LAMP VOLTAGES PROCEDURE
USING TRUE RMS AC+DC METER, OR CONVERSION TABLE BELOW

SETUP LAMP VOLTAGES	INITIAL SETTINGS BY: _____ DATE: _____ METER: _____
FAR GATE	1 L1 = _____ VOLTS 1 L2 = _____ VOLTS 2 L1 = _____ VOLTS 2 L2 = _____ VOLTS
SSCCIV	1 L1 = _____ VOLTS 1 L2 = _____ VOLTS 2 L1 = _____ VOLTS 2 L2 = _____ VOLTS
NEAR GATE	1 L1 = _____ VOLTS 1 L2 = _____ VOLTS 2 L1 = _____ VOLTS 2 L2 = _____ VOLTS

MULTIMETER READING VARIANCE FROM ACTUAL LAMP VOLTAGE

BATTERY BANK VOLTAGE	VALID LAMP OUTPUT RANGE (In volts)	DIGITAL METER (FLUKE 87 OR EQUIVALENT)	ANALOG METER (SIMPSON 260 OR TS111)
13.3	9.0 TO 12.0	1.3 VOLTS BELOW ACTUAL VALUE	0.6 VOLTS BELOW ACTUAL VALUE
14.7	9.0 TO 12.0	2.2 VOLTS BELOW ACTUAL VALUE	1.1 VOLTS BELOW ACTUAL VALUE
15.8	9.0 TO 12.0	2.6 VOLTS BELOW ACTUAL VALUE	2.0 VOLTS BELOW ACTUAL VALUE

FOR LAMP OUTPUT SETTINGS GREATER THAN 12.0 VOLTS, REDUCE THE LISTED VALUES BY 30%
LAMP VOLTAGE MEASUREMENTS SHOULD BE ACCURATE TO 0.3 VOLTS.

SOFTWARE VERSION: 9V546-A01.N

TO BE CONFIRMED

CONFIRMED
DATE _____
BY _____
(PRINT NAME)

IRC 07 MAY 2013

PROPOSED
DESIGN NO. 13-0136
RED-IN YELLOW-OUT

AS INSTALLED
DATE _____
BY _____
(PRINT NAME)

PROPOSED D	M	Y	REVISIONS	D	C	COMPLETED D	M	Y	C

REGION SOUTHERN
SUB. JOLIET 350

SIGNALS AND COMMUNICATIONS HOMEWOOD
07 MAY 2013
DES. APL
CH. BJW

SSCCIV PROGRAM DATA

LOCKPORT, IL
16TH / DIVISION

JOL-033.11-05A

DOT# 289 756C

INVENSYS RAIL CORPORATION

DES.: APL	DATE: 07-05-13	JOB NO.:	
CKD.: BJW	ISSUE DATE: N/A	EST. NO.: UXXD03631	
DRN.: APL	PLAN NO.: N/A	SHEET 5A OF 6	
P TIME: 11:50	P DATE: 14-AUG-2014	CAD ID.: JOL-033.11-05A	

INVENSYS RAIL CORP.
LOUISVILLE DIVISION, LOUISVILLE, KY

JOL-033.11-05a.dgn
14-AUG-2014

REVISIONS				
NO.	DATE	BY	DESCRIPTION	APP. BY
1	07/05/13	APL	SSCCIV UPGRADE	BJW
2				
3				
4				
5				

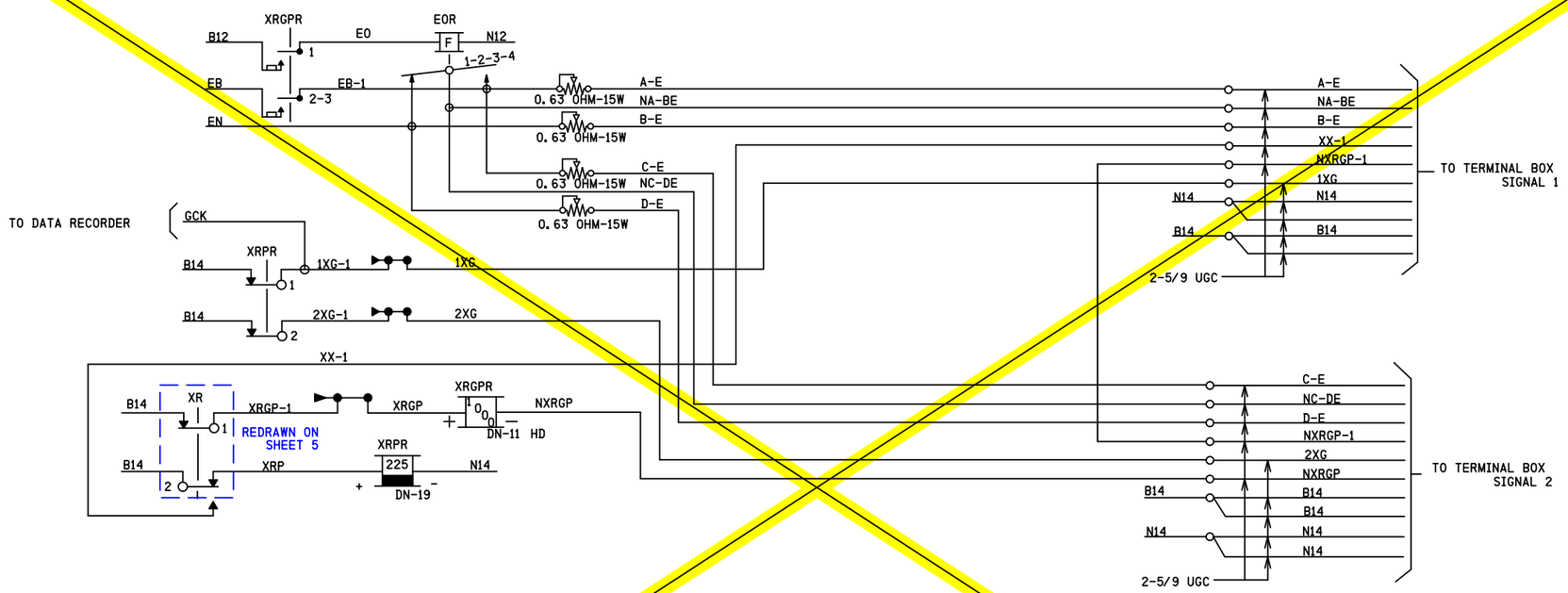

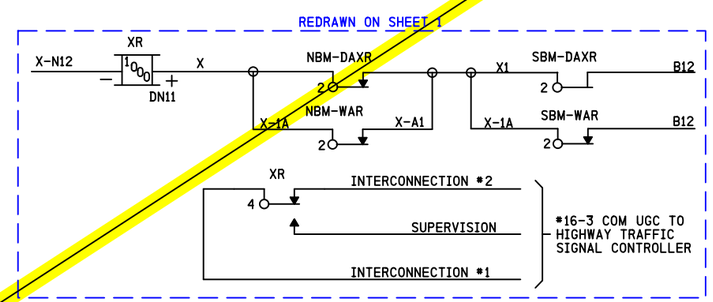

OBSOLETE
07/05/13
DESIGN# 13-0136
IRC

INVENSYS RAIL CORPORATION			
DES. : APL	DATE: 07-05-13	JOB NO. :	
CKD. : BJW	ISSUE DATE: N/A	EST. NO. :UXXD03631	
DRN. : APL	PLAN NO. :N/A	SHEET 5X OF 6	
P TIME:11:50	P DATE: 14-AUG-2014	CAD ID. : JOL-033.11-05X	

PROPOSED D	M	Y	REVISIONS	D	C	COMPLETED D	M	Y	C
			AS INSTALLED			07	05	13	APL

REGION SOUTHERN
SUB. JOLIET 350
SIGNALS AND COMMUNICATIONS HOMEWOOD
DES. WJL
CH.
20 JANUARY 1998
GATE CIRCUITS
LOCKPORT, IL
16TH / DIVISION
JOL-033.11-05X
DOT# 289 756C

INVENSYS RAIL CORP.
LOUISVILLE DIVISION, LOUISVILLE, KY

JOL-033.11-05X.dgn
14-AUG-2014

REVISIONS				
NO.	DATE	BY	DESCRIPTION	APP. BY
1	07/05/13	APL	SSCCIV UPGRADE	BJW
2				
3				
4				
5				

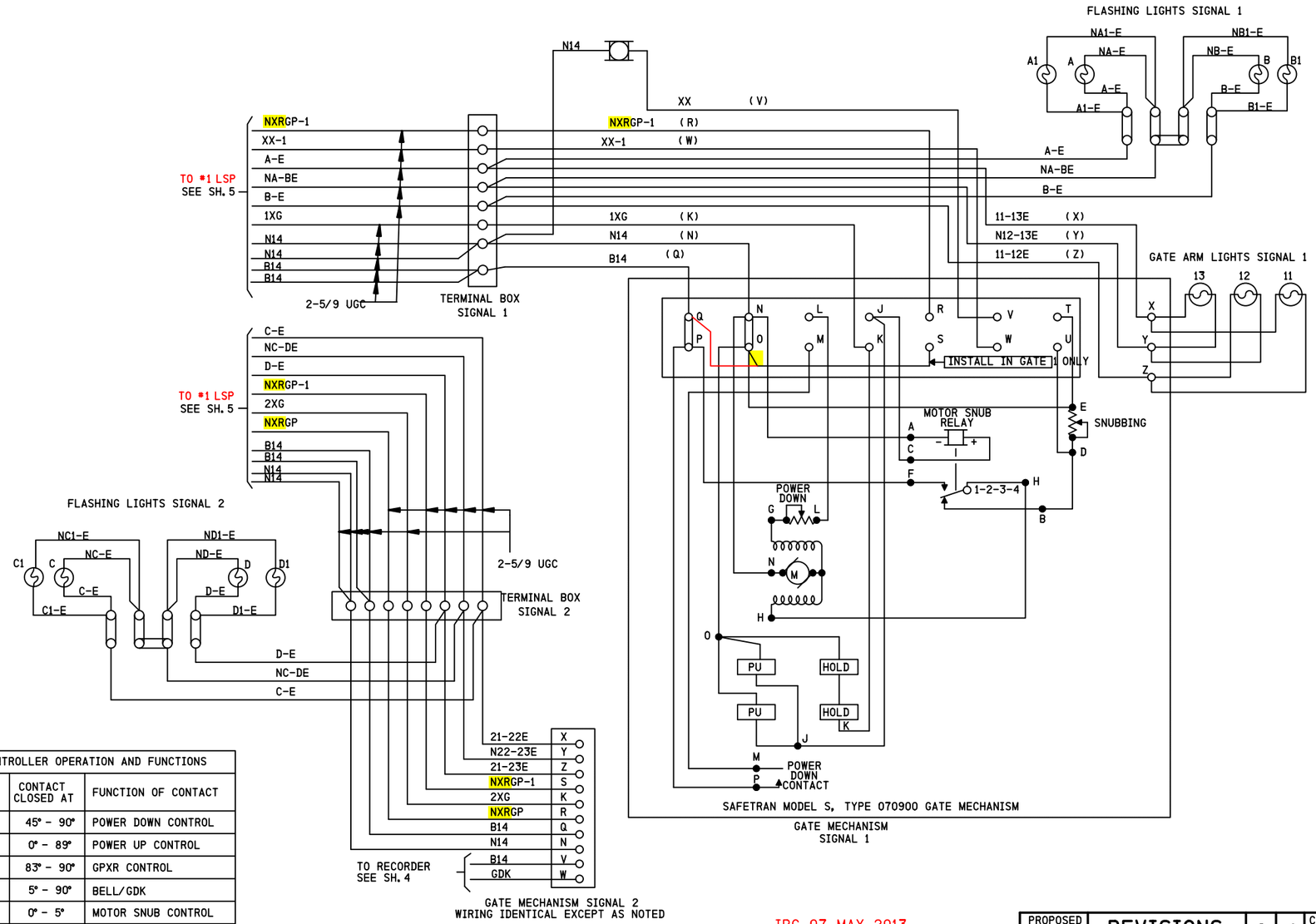

CIRCUIT CONTROLLER OPERATION AND FUNCTIONS		
CONTACT SPACE	CONTACT CLOSED AT	FUNCTION OF CONTACT
L - M	45° - 90°	POWER DOWN CONTROL
J - K	0° - 89°	POWER UP CONTROL
R - S	83° - 90°	GPXR CONTROL
V - W	5° - 90°	BELL/GDK
T - U	0° - 5°	MOTOR SNUB CONTROL

IRC 07 MAY 2013

PROPOSED
DESIGN NO. 13-0136
RED-IN YELLOW-OUT

AS INSTALLED
DATE _____
BY _____
(PRINT NAME)

PROPOSED D	PROPOSED M	PROPOSED Y	REVISIONS	D	C	COMPLETED D	COMPLETED M	COMPLETED Y	C
			AS INSTALLED			07	05	13	APL
07	05	13	SSCC IV UPGRADE	APL	BJW				

REGION SOUTHERN
SUB. JOLIET 350
SIGNALS AND COMMUNICATIONS HOMEWOOD
DES. WJL
20 JANUARY 1998
CH.
GATE CONTROLS
LOCKPORT, IL
16TH / DIVISION
JOL-033.11-06

DOT# 289 756C

7

INVENSYS RAIL CORPORATION

DES.: APL	DATE: 07-05-13	JOB NO.:	
CKD.: BJW	ISSUE DATE: N/A	EST. NO.: UXXD03631	
DRN.: APL	PLAN NO.: N/A	SHEET 6 OF 6	
P TIME: 11:50	P DATE: 14-AUG-2014	CAD ID.: JOL-033.11-06	

INVENSYS RAIL CORP.
LOUISVILLE DIVISION, LOUISVILLE, KY

jol-033.11-06.dgn
14-AUG-2014