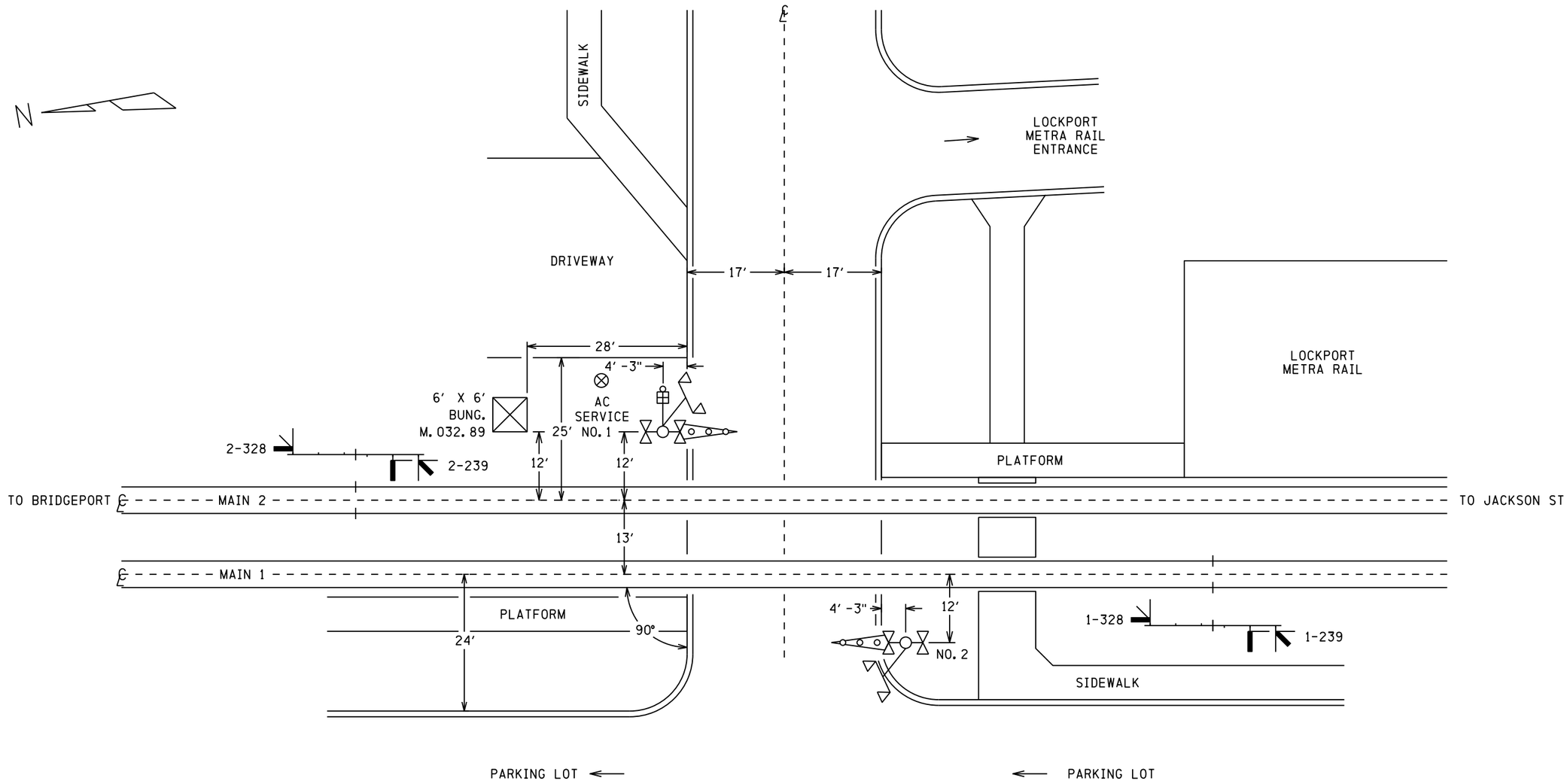

NOTES

1) 79 MPH DESIGN SPEED

2) 35 FEET MAXIMUM CLEARANCE DISTANCE

3) 150 FEET ISLAND DISTANCE - MAIN 1
   150 FEET ISLAND DISTANCE - MAIN 2

4) CONSTANT WARNING CONTROL

5) APPROACH CIRCUIT DISTANCE PROVIDES FOR:
   0 SEC CLEARANCE TIME
   0 36 SEC PREEMPTION TIME (0 SEC ADVANCE TIME)
   20 36 SEC MINIMUM WARNING TIME
   4 SEC GATE DESCENT DELAY
   10 SEC BUFFER TIME
   5 SEC EQUIPMENT REACTION TIME

6) 21 FEET NO. 1 GATE ARM LENGTH
   21 FEET NO. 2 GATE ARM LENGTH

SII 06 AUG 2014

PROPOSED
DESIGN NO. 13-0463
RED-IN YELLOW-OUT

AS INSTALLED
DATE _____
BY _____
(PRINT NAME)

PROPOSED D	PROPOSED M	PROPOSED Y	REVISIONS	D	C	COMPLETED D	COMPLETED M	COMPLETED Y	C
			PLAN REDRAWN			07	08	14	NAD
07	08	14	ADD PREEMPT	NAD	MRB				

REGION SOUTHERN
SUB. JOLIET 350

SIGNALS AND COMMUNICATIONS HOMEWOOD
06 AUGUST 2014
DES. KLT
CH. MRB

SITUATION SKETCH
SCALE 1" = 20′
LOCKPORT, IL

13TH STREET

JOL-032. 89-0

DOT# 289 755V

15

SIEMENS INDUSTRY INC
LOUISVILLE DIVISION, LOUISVILLE, KY

jol-032.89-0.dgn
14-AUG-2014

REVISIONS			
NO.	DATE	BY	DESCRIPTION	APP. BY
1	07/05/13	APL	SSCCIV UPGRADE	BJW
2				
3				
4				
5				

10TH ST.

FLASHING LIGHT UNITS ALIGNMENT TABLE

PRIMARY FRONT LIGHTS FOR VEHICLES							
SIG #	LIGHT #	ROUNDEL SIZE	ROUNDEL TYPE	ROAD SPEED MPH	MINIMUM DISTANCE FT	RECOMMENDED DISTANCE FT	ALIGNMENT DISTANCE FT
1	A,B	"		30	270	450	
2	C,D	"		30	270	450	
BACK LIGHTS FOR VEHICLES							
SIG #	LIGHT #	ROUNDEL SIZE	ROUNDEL TYPE	ROAD SPEED MPH	MINIMUM DISTANCE FT	RECOMMENDED DISTANCE FT	ALIGNMENT DISTANCE FT
1	A1,B1	"		N/A	N/A	N/A	50
2	C1,D1	"		N/A	N/A	N/A	50
INTERMEDIATE FRONT LIGHTS FOR VEHICLES							
SIG #	LIGHT #	ROUNDEL SIZE	ROUNDEL TYPE	ROAD SPEED MPH	MINIMUM DISTANCE FT	RECOMMENDED DISTANCE FT	ALIGNMENT DISTANCE FT
1	E,F	"		N/A	N/A	N/A	
2	G,H	"		N/A	N/A	N/A	

NOTE
FIELD IS TO PROVIDE THE ACTUAL ALIGNMENT DISTANCE AS DETERMINED BY
SCP-706: ROAD CROSSING DEVICE LIGHT UNIT ALIGNMENT PROCEDURES

CONTENT	SHEET #
SITUATION SKETCH	0
TRACK	01
LINE CIRCUITS	02
NB GCP "E" TRACK	03
NB GCP "C" TRACK	04
SB GCP "A" & "D" TRACK	05
POWER	06
NB GCP APPLICATION "E" TRACK	07
NB GCP APPLICATION "C" TRACK	08
SB GCP APPLICATION "A" & "D" TRACKS	09
#1 RECORDER CIRCUITS	10
#2 RECORDER CIRCUITS	11
SSCCIV CROSSING CONTROLLER LIGHTING SURGE PANELS #1 & #2	12
SSCCIV PROGRAM DATA	13
GATE CONTROLS	14

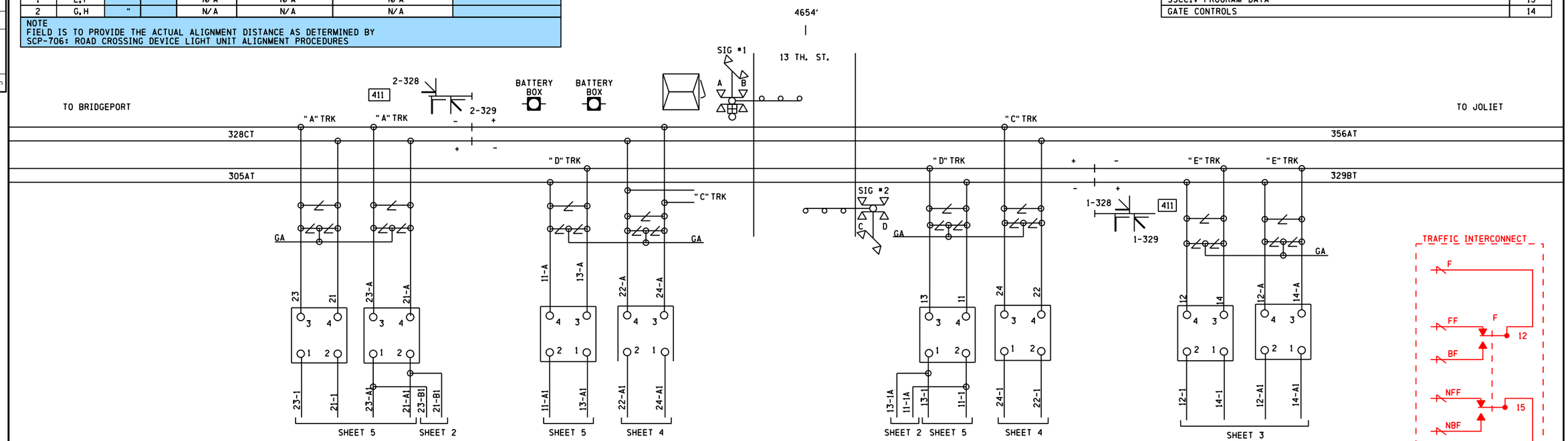

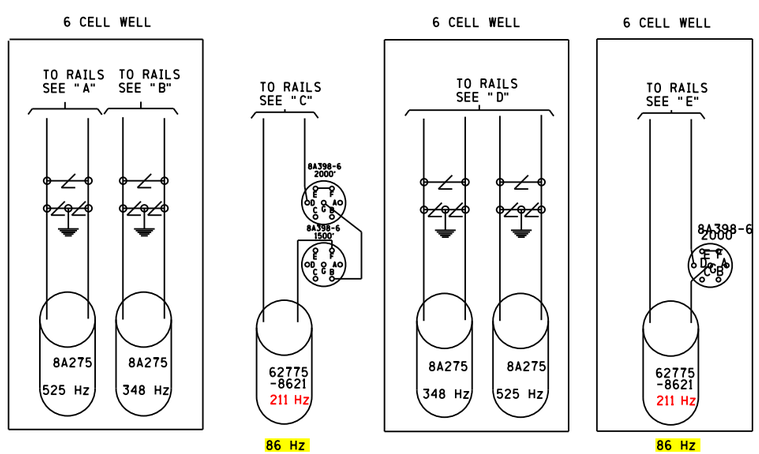

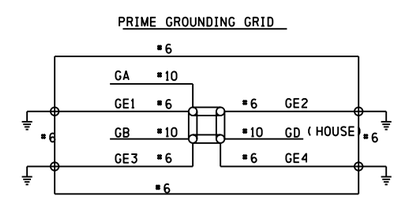

TO BE CONFIRMED

CONFIRMED
DATE _____
BY _____
(PRINT NAME)

SII 07 AUG 2014
PROPOSED
DESIGN NO. 13-0463
RED-IN YELLOW-OUT

AS INSTALLED
DATE _____
BY _____
(PRINT NAME)

PROPOSED D	PROPOSED M	PROPOSED Y	REVISIONS	D	C	COMPLETED D	COMPLETED M	COMPLETED Y	C
			AS INSTALLED			07	05	13	APL
07	05	13	SSCC IV UPGRADE	APL	BJW	06	08	14	NAD
07	08	14	ADD PREEMPT	NAD	MRB				

REGION SOUTHERN
SUB. JOLIET 350
SIGNALS AND COMMUNICATIONS HOMEWOOD
DES. WJL
12 JANUARY 1998
CH.
TRACK
LOCKPORT, IL
13TH ST.
JOL-032.89-01
14
DOT# 289 755V

SIEMENS INDUSTRY INC
DES.: APL | DATE: 07-05-13 | JOB NO.:
CKD.: BJW | ISSUE DATE: N/A | EST. NO. JXXD03631
DRN.: APL | PLAN NO.: N/A | SHEET 1 OF 14
P TIME: 17:19 | P DATE: $$PLOT_DATE | CAD ID.: JOL-032.89-01

SIEMENS INDUSTRY INC
LOUISVILLE DIVISION, LOUISVILLE, KY

JOL-032.89-01.dgn
14-AUG-2014

REVISIONS				
NO.	DATE	BY	DESCRIPTION	APP. BY
1	07/05/13	APL	SSCCIV UPGRADE	BJW
2				
3				
4				
5				

jol-032.89-02.dgn
14-AUG-2014

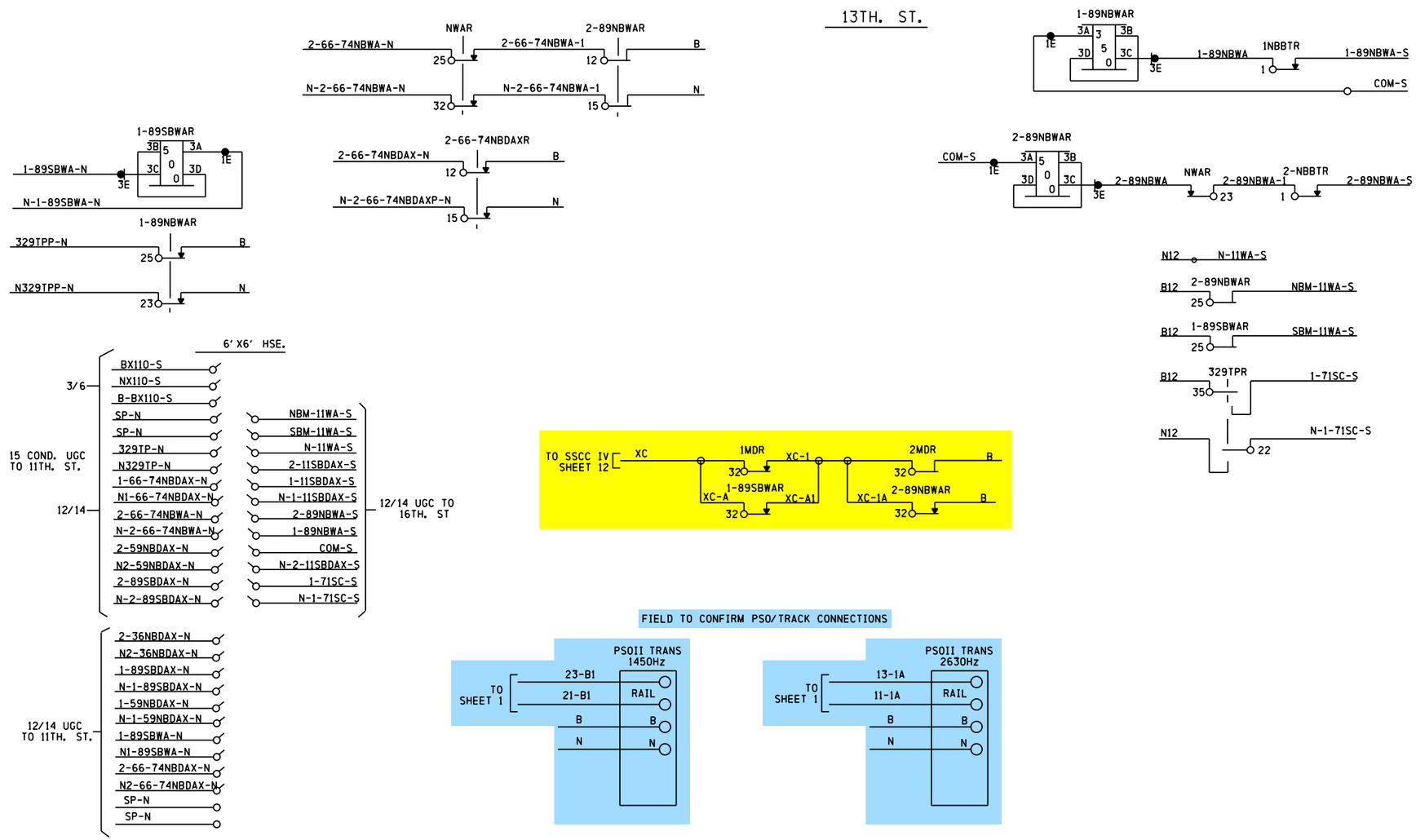

SIEMENS INDUSTRY INC			
DES.: APL	DATE: 07-05-13	JOB NO.:	
CKD.: BJW	ISSUE DATE: N/A	EST. NO.: JXXD03631	
DRN.: APL	PLAN NO.: N/A	SHEET 2 OF 14	
P TIME: 17:19	P DATE: $$PLOT_DATE	CAD ID.: JOL-032.89-02	

TO BE CONFIRMED

CONFIRMED
DATE _____
BY _____
(PRINT NAME)

SII 07 AUG 2014

PROPOSED
DESIGN NO. 13-0463
RED-IN YELLOW-OUT

AS INSTALLED
DATE _____
BY _____
(PRINT NAME)

PROPOSED D	PROPOSED M	PROPOSED Y	REVISIONS	D	C	COMPLETED D	COMPLETED M	COMPLETED Y	C
			AS INSTALLED			07	05	13	APL
07	05	13	SSCC IV UPGRADE	APL	BJW	06	08	14	NAD
07	08	14	ADD PREEMPT	NAD	MRB				

REGION SOUTHERN
SUB. JOLIET 350
SIGNALS AND COMMUNICATIONS HOMEWOOD
12 JANUARY 1998
DES. WJL
CH.
LINE CIRCUITS
LOCKPORT, IL
13TH ST.
JOL-032.89-02

SIEMENS INDUSTRY INC
LOUISVILLE DIVISION, LOUISVILLE, KY

DOT# 289 755V

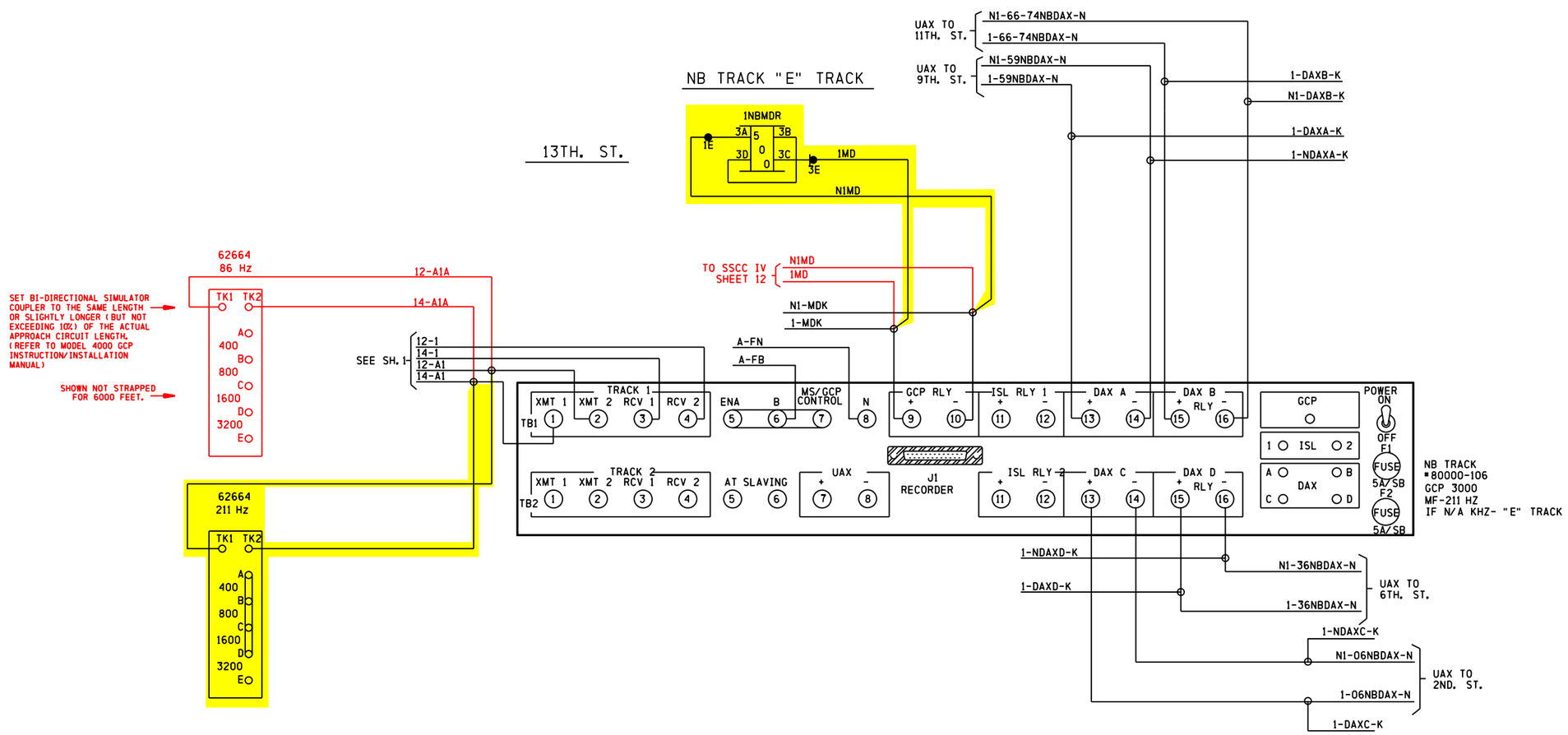

REVISIONS				
NO.	DATE	BY	DESCRIPTION	APP. BY
1	07/05/13	APL	SSCCIV UPGRADE	BJW
2				
3				
4				
5				

SIEMENS INDUSTRY INC

DES. : APL	DATE: 07-05-13	JOB NO. :	
CKD. : BJW	ISSUE DATE: N/A	EST. NO. : UXXD3631	
DRN. : APL	PLAN NO. : N/A	SHEET 3 OF 14	
P TIME: 17:19	P DATE: $$PLOT_DATE	CAD ID. : JOL-032.89-03	

SIII 07 AUG 2014

PROPOSED
DESIGN NO. 13-0463
RED-IN YELLOW-OUT

AS INSTALLED
DATE _____
BY _____
(PRINT NAME)

PROPOSED D	PROPOSED M	PROPOSED Y	REVISIONS	D	C	COMPLETED D	COMPLETED M	COMPLETED Y	C
			AS INSTALLED			07	05	13	APL
07	05	13	SSCC IV UPGRADE	APL	BJW	06	08	14	NAD
07	08	14	ADD PREEMPT	NAD	MRB				

REGION SOUTHERN
SUB. JOLIET 350
SIGNALS AND COMMUNICATIONS HOMEWOOD
DES. WJL
12 JANUARY 1998
CH.
NB GCP "E" TRACK
LOCKPORT, IL
13TH ST.
JOL-032.89-03
DOT# 289 755V

SIEMENS INDUSTRY INC
LOUISVILLE DIVISION, LOUISVILLE, KY

JOL-032.89-03.dgn
14-AUG-2014

REVISIONS				
NO.	DATE	BY	DESCRIPTION	APP. BY
1	07/05/13	APL	SSCCIV UPGRADE	BJW
2				
3				
4				
5				

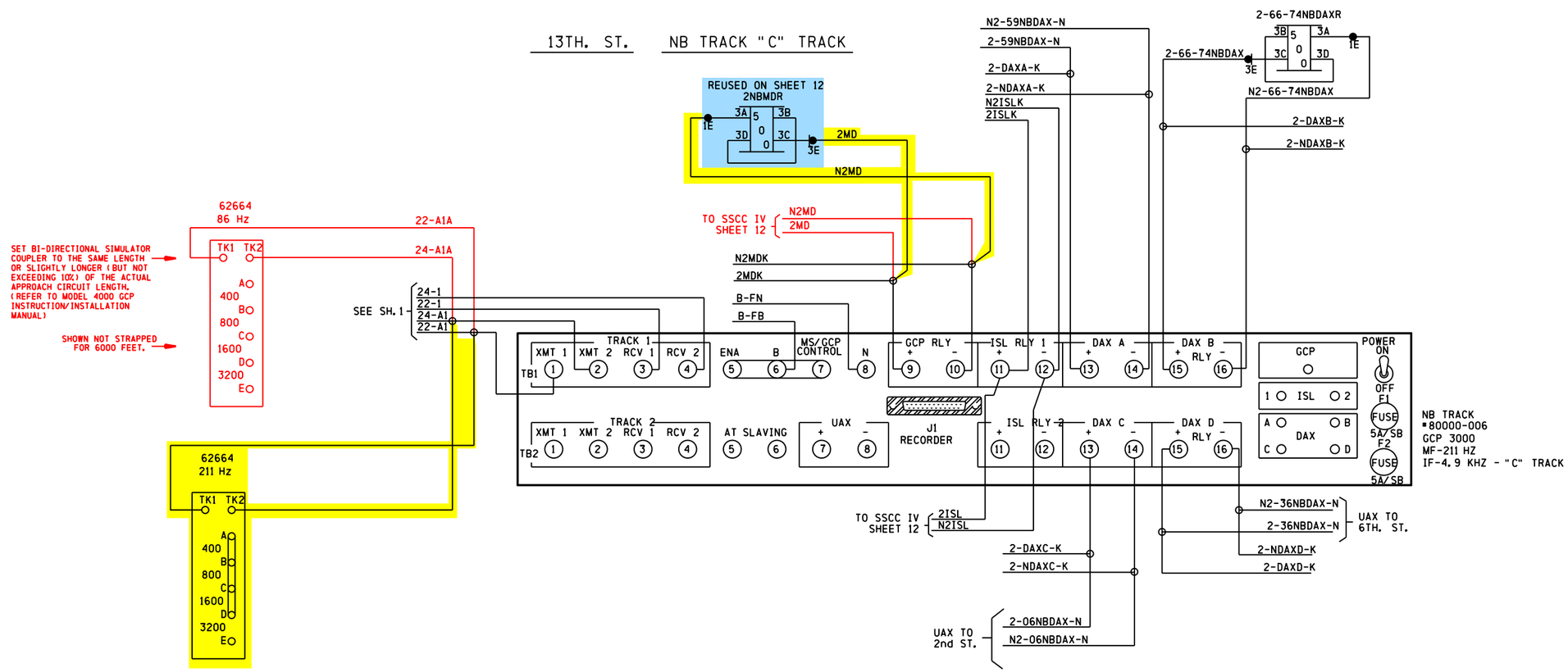

SIEMENS INDUSTRY INC

DES.: APL	DATE: 07-05-13	JOB NO.:	
CKD.: BJW	ISSUE DATE: N/A	EST. NO.:	JXXD03631
DRN.: APL	PLAN NO.: N/A	SHEET 4 OF 14	
P TIME: 17:19	P DATE: $$PLOT_DATE	CAD ID.:	JOL-032.89-04

SII 07 AUG 2014

PROPOSED
DESIGN NO. 13-0463
RED-IN YELLOW-OUT

AS INSTALLED
DATE _____
BY _____
(PRINT NAME)

PROPOSED D	PROPOSED M	PROPOSED Y	REVISIONS	D	C	COMPLETED D	COMPLETED M	COMPLETED Y	C
			AS INSTALLED			07	05	13	APL
07	05	13	SSCC IV UPGRADE	APL	BJW	06	08	14	NAD
07	08	14	ADD PREEMPT	NAD	MRB				

REGION SOUTHERN
SUB. JOLIET 350
SIGNALS AND COMMUNICATIONS HOMEWOOD
12 JANUARY 1998
DES. WJL
CH.
NB GCP "C" TRACK
LOCKPORT, IL
13TH ST.
JOL-032.89-04

DOT# 289 755V

SIEMENS INDUSTRY INC
LOUISVILLE DIVISION, LOUISVILLE, KY

jol-032.89-04.dgn
14-AUG-2014

REVISIONS				
NO.	DATE	BY	DESCRIPTION	APP. BY
1	07/05/13	APL	SSCCIV UPGRADE	BJW
2				
3				
4				
5				

jol-032.89-05.dgn
14-AUG-2014

13TH. ST. SB TRACKS "A" & "D" TRACKS

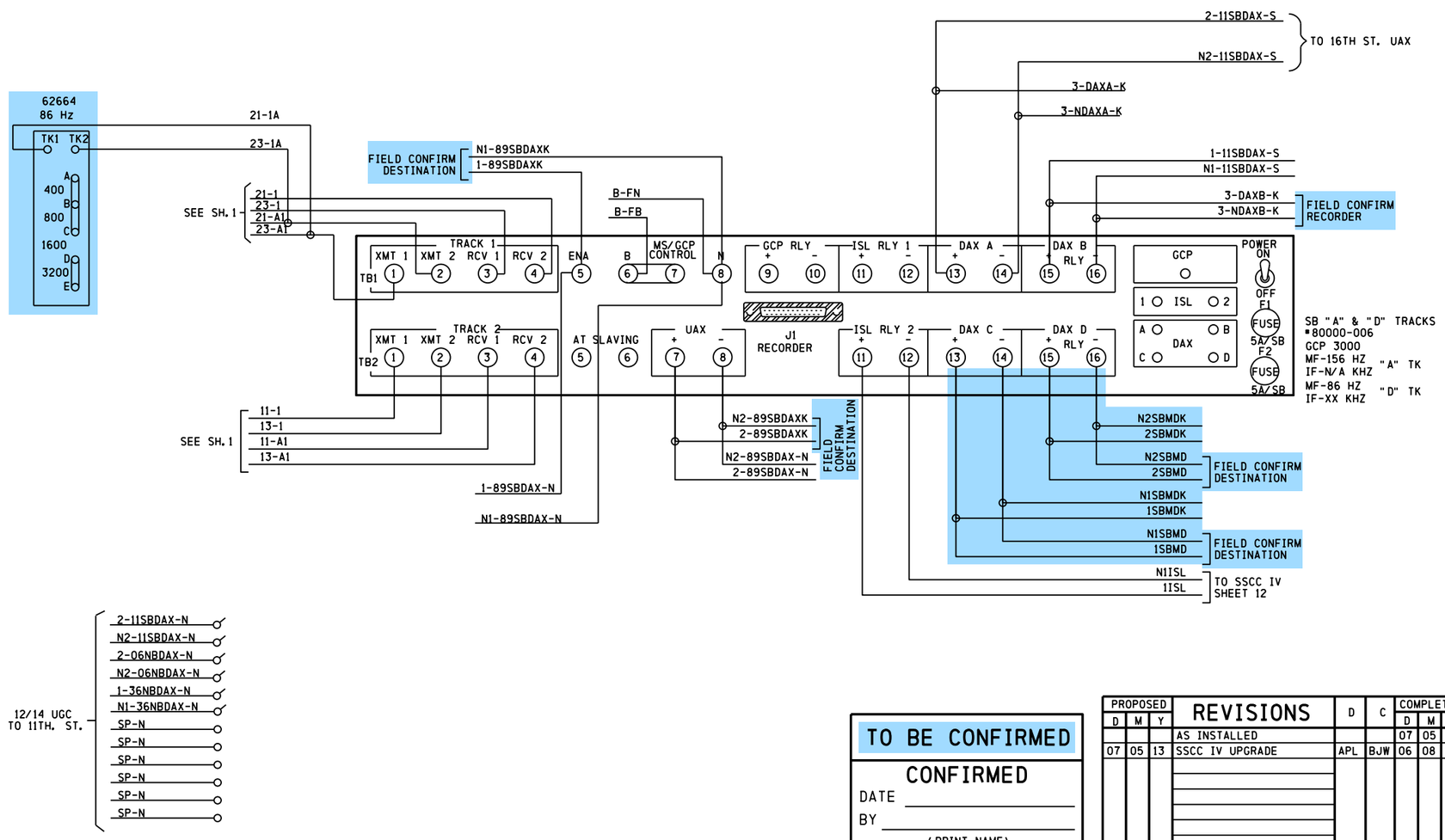

TO BE CONFIRMED

CONFIRMED

DATE _____

BY _____

(PRINT NAME)

PROPOSED D	PROPOSED M	PROPOSED Y	REVISIONS	D	C	COMPLETED D	COMPLETED M	COMPLETED Y	C
			AS INSTALLED			07	05	13	APL
07	05	13	SSCC IV UPGRADE	APL	BJW	06	08	14	NAD

REGION SOUTHERN

SUB. JOLIET 350

SIGNALS AND COMMUNICATIONS HOMEWOOD

DES. WJL

12 JANUARY 1998

CH.

SB GCP "A" & "D" TRACKS

LOCKPORT, IL

13TH ST.

JOL-032.89-05

DOT# 289 755V

SIEMENS INDUSTRY INC

DES.: APL	DATE: 07-05-13	JOB NO.:	
CKD.: BJW	ISSUE DATE: N/A	EST. NO.: UXXD03631	
DRN.: APL	PLAN NO.: N/A	SHEET 5 OF 14	
P TIME: 17:19	P DATE: $$PLOT_DATE	CAD ID.: JOL-032.89-05	

SIEMENS INDUSTRY INC
LOUISVILLE DIVISION, LOUISVILLE, KY

REVISIONS				
NO.	DATE	BY	DESCRIPTION	APP. BY
1	07/05/13	APL	SSCCIV UPGRADE	BJW
2				
3				
4				
5				

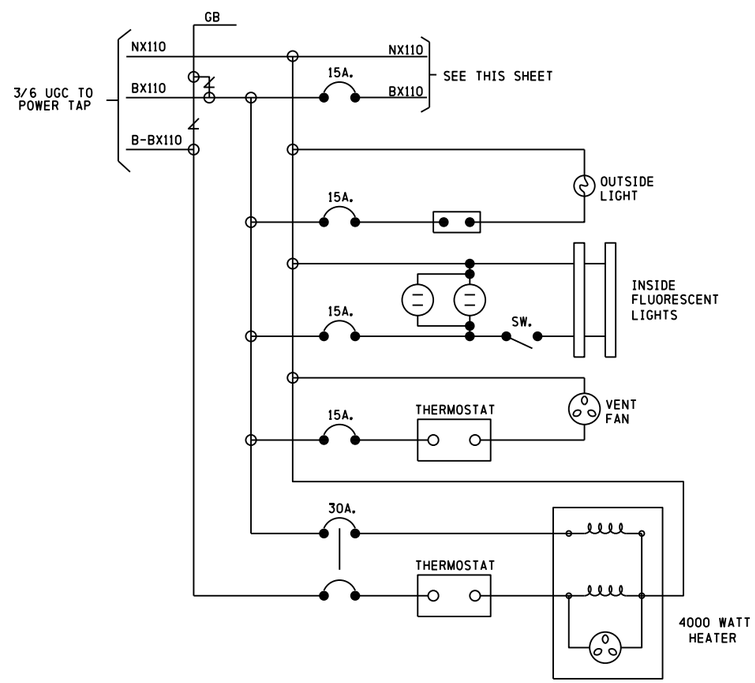

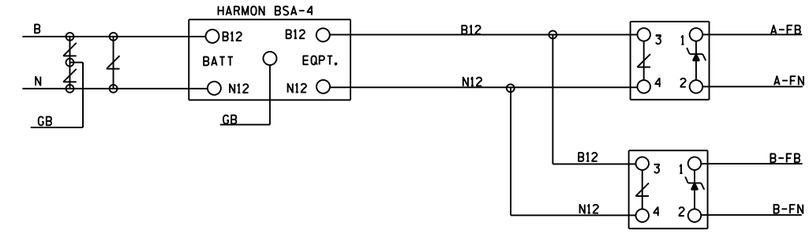

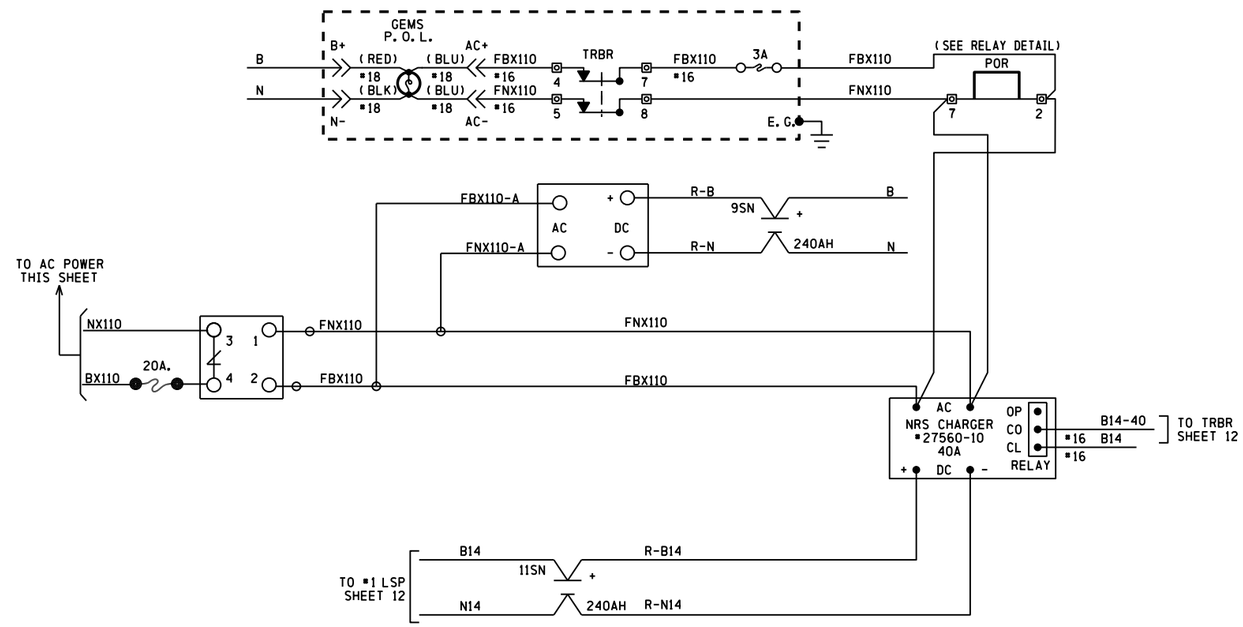

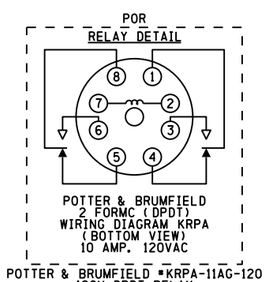

POTTER & BRUMFIELD #KRPA-11AG-120
120V-DPDT RELAY
8 PIN SOCKET #27E122
HOLD DOWN SPRING #20C176

SIEMENS INDUSTRY INC			
DES.: APL	DATE: 07-05-13	JOB NO.:	
CKD.: BJW	ISSUE DATE: N/A	EST. NO.: JXXD03631	
DRN.: APL	PLAN NO.: N/A	SHEET 6 OF 14	
P TIME: 17:19	P DATE: $$PLOT_DATE	CAD ID.: JOL-032.89-06	

SIEMENS INDUSTRY INC
LOUISVILLE DIVISION, LOUISVILLE, KY

PROPOSED D	PROPOSED M	PROPOSED Y	REVISIONS	D	C	COMPLETED D	COMPLETED M	COMPLETED Y	C
			AS INSTALLED			07	05	13	APL
07	05	13	SSCC IV UPGRADE	APL	BJW	06	08	14	NAD

REGION SOUTHERN
SUB. JOLIET 350

SIGNALS AND COMMUNICATIONS HOMEWOOD
DES. WJL
12 JANUARY 1998
CH.

POWER
LOCKPORT, IL
13TH ST.

JOL-032.89-06

DOT# 289 755V

jol-032.89-06.dgn
14-AUG-2014

NB TRACK "E" TRACK

Equipment: 3000 ■ 3000D2 □ 3008 □ 3008D2 □ 3000ND □ 3000ND2 □

3000 GCP APPLICATION HISTORY CARD

Unit/Serial No: _____ Crossing No: DOT. 289-7558 IC-32.89 - AO

Crossing Name: 13TH. STREET (SBM) City: LOCKPORT State: IL

Date Installed: APRIL 19, 1990 Weather: _____

Island Frequency: T1: _____ kHz T2: 5.9 kHz

PROGRAMMING HISTORY

	Initial Programmed Value Date: 4-19-90	Program Change Date: 6-29-94	Program Change Date: 2-18-13
■ press PROGRAM key			
NUMBER OF TRACKS (Number of transceiver modules, 1 or 2)	1 □ 2 ■	1 □ 2 ■	1 ■ 2 □
FREQUENCY (MS/GCP) GCP	156 Hz	156 Hz	211 86 Hz
UNIDIRECTIONAL/BIDIRECTIONAL T1:	UNI □ BI ■	UNI □ BI ■	UNI ■ BI ■
T2:	UNI □ BI ■	UNI □ BI ■	UNI □ BI □
XMIT LEVEL T1:	HI □ MED ■	HI □ MED ■	HI ■ MED □
T2:	HI □ MED ■	HI □ MED ■	HI □ MED □
PREDICTOR/MOTION SENSOR T1:	PRED ■ MS □	PRED ■ MS □	PRED ■ MS □
T2:	PRED ■ MS □	PRED ■ MS □	PRED □ MS □
WARNING TIME SELECTED T1:	35 sec.	sec.	46 35 sec.
T2:	35 sec.	sec.	sec.
APPROACH DISTANCE SELECTED T1:	3301 ft.	ft.	4092 5930 ft.
T2:	1622 ft.	ft.	ft.
APPROACH DISTANCE COMPUTED T1:	3646 ft.	ft.	4423 ft.
T2:	1887 ft.	ft.	ft.
UAX PICKUP DELAY (UAX1) (0 = OFF)	25 sec.	0 sec.	0 sec.
ENA/UAX2 DELAY (0 = ENA)	0 sec.	2UAX 25 sec.	0 sec.
ISLAND DISTANCE (between Island track wire connections) T1:	0 ft.	ft.	0 ft.
T2:	136 ft.	ft.	ft.
NUMBER OF DAX'S	0 □ 1 □ 2 □ 3 ■ 4 □	0 □ 1 □ 2 □ 3 ■ 4 □	0 □ 1 □ 2 □ 3 □ 4 ■
DAX A TRACK ASSIGNMENT	T1 ■ T2 □	T1 □ T2 □	T1 ■ T2 □
DAX A DISTANCE (0=PREEMPT)	9th 1472 ft.	1472 ft.	1489 ft.
DAX A WARNING TIME	35 sec.	35 sec.	44 sec.
DAX B TRACK ASSIGNMENT	T1 ■ T2 □	T1 ■ T2 □	T1 ■ T2 □
DAX B DISTANCE (0=PREEMPT)	10th-11th 761 ft.	761 ft.	647 ft.
DAX B WARNING TIME	35 sec.	35 sec.	35 sec.
DAX C TRACK ASSIGNMENT	T1 □ T2 ■	T1 □ T2 ■	T1 ■ T2 □
DAX C DISTANCE (0=PREEMPT)	2nd 1171 ft.	1171 ft.	4283 ft.
DAX C WARNING TIME	35 sec.	35 sec.	35 sec.
DAX D TRACK ASSIGNMENT	T1 □ T2 □	T1 □ T2 □	T1 ■ T2 □
DAX D DISTANCE (0=PREEMPT)	6th ft.	ft.	2711 ft.
DAX D WARNING TIME	sec.	sec.	35 sec.

PROGRAMMING HISTORY (continued)

	Initial Programmed Value Date: 4-19-90	Program Change Date: 6-29-94	Program Change Date: 2-18-13
SLAVING MASTER/SLAVE	MASTER ■ SLAVE □	MASTER ■ SLAVE □	MASTER ■ SLAVE □
PASSWORD ENABLED	DISABLED □	DISABLED □	DISABLED ■
	ENABLED ■	ENABLED ■	ENABLED □
RECORDER INSTALLED	NOT INSTALLED ■	NOT INSTALLED □	NOT INSTALLED □
	INSTALLED □	INSTALLED ■	INSTALLED ■
RS-232-C BAUD RATE	9600 bps	9600 bps	9600 bps
RS-232-C DATA BITS	7 □ 8 □	7 □ 8 ■	7 □ 8 ■
RS-232-C STOP BITS	1 □ 2 □	1 ■ 2 □	1 ■ 2 □
RS-232-C PARITY	NONE □ MARK □	NONE ■ MARK □	NONE ■ MARK □
	ODD □ SPACE □	ODD □ SPACE □	ODD □ SPACE □
(NOTE: SET DATE & TIME AS REQUIRED)	EVEN □	EVEN □	EVEN □
DATE (e.g., 4 NOV 1993)	_____	_____	_____
TIME (e.g., 11:25:43 AM)	_____	_____	_____
DAYLIGHT SAVINGS	ON □ OFF □	ON ■ OFF □	ON □ OFF ■

EXPANDED PROGRAMMING HISTORY (Function Mode, Optional)

	Initial Programmed Value Date: 4-19-90	Program Change Date: 6-29-94	Program Change Date:
■ press FUNCTION key			
SWITCH TO MS (enter EZ value) T1:	10 EZ.	10 EZ.	10 sec.
T2:	10 EZ.	10 EZ.	sec.
TRANSFER DELAY MS TO GCP (0=OFF) T1:	0 ft.	0 ft.	0 ft.
T2:	0 ft.	0 ft.	ft.
PRIME PREDICTION OFFSET (0=OFF) T1:	0 ft.	0 ft.	0 ft.
T2:	0 ft.	0 ft.	ft.
PICKUP DELAY PRIME	15 sec.	15 sec.	30 sec.
PICKUP DELAY DAX A	15 sec.	15 sec.	15 sec.
PICKUP DELAY DAX B	15 sec.	15 sec.	15 sec.
PICKUP DELAY DAX C	15 sec.	15 sec.	15 sec.
PICKUP DELAY DAX D	sec.	sec.	15 sec.
COMPENSATION VALUE T1:	1100 sec.	1100 sec.	1300 sec.
COMPENSATION VALUE T2:	1100 sec.	1100 sec.	sec.

CALIBRATION HISTORY RE-CALIBRATED 8-8-94

		FULL TRACK (NO HARDWIRE SHUNT)	FULL TRACK (HARDWIRE SHUNT AT TERMINATION)	50 PERCENT TRACK (HARDWIRE SHUNT) NO LINEARIZATION	LINEARIZATION STEP +/-	LINEARIZATION EZ
		/	/	/		
SBM	SOUTH EZ/EX	99 / 99	91 / 101	45 / 101	0	45
		/	/	/		
SBM	NORTH EZ/EX	99 / 91	77 / 95	32 / 85	+014	38

SII 07 AUG 2014

PROPOSED
DESIGN NO. 13-0463
RED-IN YELLOW-OUT

AS INSTALLED
DATE _____
BY _____
(PRINT NAME)

PROPOSED D	M	Y	REVISIONS	D	C	COMPLETED D	M	Y	C
			AS INSTALLED			07	05	13	APL
07	08	14	ADD PREEMPT	NAD	MRB				

REGION SOUTHERN
SUB. JOLIET 350

SIGNALS AND COMMUNICATIONS HOMEWOOD
12 JANUARY 1998
DES. WJL
CH.

NB GCP APPLICATION "E" TRACK

LOCKPORT, IL
13TH ST.

JOL-032.89-07

DOT# 289 755V

REVISIONS NO.	DATE	BY	DESCRIPTION	APP. BY
1	07/05/13	APL	SSCCIV UPGRADE	BJW
2				
3				
4				
5				

SIEMENS INDUSTRY INC

DES.: APL	DATE: 07-05-13	JOB NO.:	
CKD.: BJW	ISSUE DATE: N/A	EST. NO.: UXXD03631	
DRN.: APL	PLAN NO.: N/A	SHEET 7 OF 14	
P TIME: 17:19	P DATE: $$PLOT_DATE	CAD ID.: JOL-032.89-07	

SIEMENS INDUSTRY INC
LOUISVILLE DIVISION, LOUISVILLE, KY

Jol-032.89-07.dgn
14-AUG-2014

REVISIONS				
NO.	DATE	BY	DESCRIPTION	APP. BY
1	07/05/13	APL	SSCCIV UPGRADE	BJW
2				
3				
4				
5				

NB TRACK "C" BOX TRACK

Equipment: 3000 ■ 3000D2 □ 3000 GCP APPLICATION HISTORY CARD
3008 □ 3008D2 □
3000ND □ 3000ND2 □
Unit/Serial No: 2440 Crossing No: DOT. 289-7558 IC-32.89 - A0
Crossing Name: 13TH. STREET (NBM-NB) City: LOCKPORT State: IL
Date Installed: APRIL 19, 1990 Weather:
Island Frequency: T1: 4.9 kHz T2: kHz

PROGRAMMING HISTORY

	Initial Programmed Value Date: 4-19-90	Program Change Date: 6-29-94	Program Change Date:
■ press PROGRAM key			
NUMBER OF TRACKS (Number of transceiver modules, 1 or 2)	1 □ 2 ■	1 □ 2 ■	1 ■ 2 □
FREQUENCY (MS/GCP) . GCP	156 Hz	156 Hz	211 86 Hz
UNIDIRECTIONAL/BIDIRECTIONAL T1:	UNI □ BI ■	UNI □ BI ■	UNI □ BI ■
T2:	UNI □ BI ■	UNI □ BI ■	UNI □ BI □
XMIT LEVEL T1:	HI ■ MED □	HI ■ MED □	HI ■ MED □
T2:	HI □ MED ■	HI □ MED ■	HI □ MED □
PREDICTOR/MOTION SENSOR T1:	PRED ■ MS □	PRED ■ MS □	PRED □ MS ■
T2:	PRED ■ MS □	PRED ■ MS □	PRED □ MS □
WARNING TIME SELECTED T1:	35 sec.	35 sec.	46 35 sec.
T2:	35 sec.	35 sec.	sec.
APPROACH DISTANCE SELECTED T1:	3460' ft.	3460' ft.	4092 5930 ft.
T2:	1472' ft.	1472' ft.	ft.
APPROACH DISTANCE COMPUTED T1:	3844' ft.	3766' ft.	4423 ft.
T2:	1954' ft.	1887' ft.	ft.
UAX PICKUP DELAY (UAX1) (0 = OFF)	25 sec.	0 sec.	0 sec.
ENA/UAX2 DELAY (0 = ENA)	0 sec.	2UAX 25 sec.	0 sec.
ISLAND DISTANCE (between Island track wire connections) T1:	136' ft.	ft.	154 ft.
T2:	0 ft.	ft.	ft.
NUMBER OF DAX'S	0 □ 1 □ 2 □ 3 □ 4 ■	0 □ 1 □ 2 □ 3 □ 4 ■	0 □ 1 □ 2 □ 3 □ 4 ■
DAX A TRACK ASSIGNMENT	T1 ■ T2 □	T1 ■ T2 □	T1 ■ T2 □
DAX A DISTANCE (0=PREEMPT)	9th 1472' ft.	1472' ft.	1489 ft.
DAX A WARNING TIME	35 sec.	35 sec.	45 sec.
DAX B TRACK ASSIGNMENT	T1 ■ T2 □	T1 ■ T2 □	T1 ■ T2 □
DAX B DISTANCE (0=PREEMPT)	10th & 11th 761' ft.	761' ft.	647 ft.
DAX B WARNING TIME	35 sec.	35 sec.	35 sec.
DAX C TRACK ASSIGNMENT	T1 □ T2 ■	T1 □ T2 ■	T1 ■ T2 □
DAX C DISTANCE (0=PREEMPT)	2nd 1170' ft.	1171' ft.	4283 ft.
DAX C WARNING TIME	35 sec.	35 sec.	35 sec.
DAX D TRACK ASSIGNMENT	T1 ■ T2 □	T1 ■ T2 □	T1 ■ T2 □
DAX D DISTANCE (0=PREEMPT)	6th 2788' ft.	2788' ft.	2711 ft.
DAX D WARNING TIME	35 sec.	35 sec.	39 sec.

PROGRAMMING HISTORY (continued)

	Initial Programmed Value Date: 4-19-90	Program Change Date: 6-29-94	Program Change Date: 2-18-13
SLAVING MASTER/SLAVE	MASTER ■ SLAVE ■	MASTER ■ SLAVE □	MASTER ■ SLAVE □
PASSWORD ENABLED	DISABLED □ ENABLED ■	DISABLED □ ENABLED ■	DISABLED ■ ENABLED □
RECORDER INSTALLED	NOT INSTALLED ■ INSTALLED □	NOT INSTALLED □ INSTALLED ■	NOT INSTALLED □ INSTALLED ■
RS-232-C BAUD RATE	9600 bps	9600 bps	9600 bps
RS-232-C DATA BITS	7 □ 8 □	7 □ 8 ■	7 □ 8 ■
RS-232-C STOP BITS	1 □ 2 □	1 ■ 2 □	1 ■ 2 □
RS-232-C PARITY	NONE □ MARK □ ODD □ SPACE □ EVEN □	NONE ■ MARK □ ODD □ SPACE □ EVEN □	NONE ■ MARK □ ODD □ SPACE □ EVEN □
(NOTE: SET DATE & TIME AS REQUIRED) DATE (e.g., 4 NOV 1993)			
TIME (e.g., 11:25:43 AM)			
DAYLIGHT SAVINGS	ON □ OFF □	ON ■ OFF □	ON □ OFF ■

EXPANDED PROGRAMMING HISTORY (Function Mode, Optional)

	Initial Programmed Value Date: 4-19-90	Program Change Date: 6-29-94	Program Change Date:
■ press FUNCTION key			
SWITCH TO MS (enter EZ value) T1:	10 EZ.	10 EZ.	10 sec.
T2:	10 EZ.	10 EZ.	sec.
TRANSFER DELAY MS TO GCP (0=OFF) T1:	0 ft.	0 ft.	0 ft.
T2:	0 ft.	0 ft.	ft.
PRIME PREDICTION OFFSET (0=OFF) T1:	0 ft.	0 ft.	0 ft.
T2:	0 ft.	0 ft.	ft.
PICKUP DELAY PRIME	15 sec.	15 sec.	30 sec.
PICKUP DELAY DAX A	15 sec.	15 sec.	15 sec.
PICKUP DELAY DAX B	15 sec.	15 sec.	15 sec.
PICKUP DELAY DAX C	15 sec.	15 sec.	15 sec.
PICKUP DELAY DAX D	15 sec.	15 sec.	15 sec.
COMPENSATION VALUE T1:	1100 sec.	1100 sec.	1300 sec.
COMPENSATION VALUE T2:	1100 sec.	1100 sec.	sec.

CALIBRATION HISTORY RE-CALIBRATED 8-8-94

		FULL TRACK (NO HARDWIRE SHUNT)	FULL TRACK (HARDWIRE SHUNT AT TERMINATION)	50 PERCENT TRACK (HARDWIRE SHUNT) NO LINEARIZATION	LINEARIZATION STEP +/-	LINEARIZATION EZ
		/	/	/		
NBM	SOUTH EZ/EX	99 / 90	91 / 96	43 / 95	+4	45
		/	/	/		
NBM	NORTH EZ/EX	101 / 93	83 / 94	36 / 86	+12	42

SII 07 AUG 2014

PROPOSED
DESIGN NO. 13-0463
RED-IN YELLOW-OUT

AS INSTALLED
DATE
BY
(PRINT NAME)

PROPOSED D	M	Y	REVISIONS	D	C	COMPLETED D	M	Y	C
			AS INSTALLED			07	05	13	APL
07	08	14	ADD PREEMPT	NAD	MRB				

REGION SOUTHERN
SUB. JOLIET 350
CN

SIGNALS AND COMMUNICATIONS HOMEWOOD
12 JANUARY 1998
DES. WJL
CH.

NB GCP APPLICATION "C" TRACK
LOCKPORT, IL
13TH ST.

JOL-032.89-08

DOT# 289 755V

SIEMENS INDUSTRY INC
LOUISVILLE DIVISION, LOUISVILLE, KY

SIEMENS INDUSTRY INC			
DES.: APL	DATE: 07-05-13	JOB NO.:	
CKD.: BJW	ISSUE DATE: N/A	EST. NO.: JXXD03631	
DRN.: APL	PLAN NO.: N/A	SHEET 8 OF 14	
P. TIME: 17:19	P. DATE: $$PLOT_DATE	CAD ID.: JOL-032.89-08	

jol-032.89-08.dgn
14-AUG-2014

REVISIONS				
NO.	DATE	BY	DESCRIPTION	APP. BY
1	07/05/13	APL	SSCCIV UPGRADE	BJW
2				
3				
4				
5				

SB TRACKS "A" & "D" TRACKS

Equipment: 3000 ■ 3000D2 ☐ 3000 GCP APPLICATION HISTORY CARD
3008 ☐ 3008D2 ☐
3000ND ☐ 3000ND2 ☐
Unit/Serial No: _____ Crossing No: DOT. 289-7558 IC-32.89 - A0
Crossing Name: 13TH. STREET (NBM-SB) City: LOCKPORT State: IL
Date Installed: _____ Weather: _____
Island Frequency: T1: N/A kHz T2: _____ kHz

PROGRAMMING HISTORY

	Initial Programmed Value Date:	Program Change Date:	Program Change Date: 2-18-13
■ press PROGRAM key			
NUMBER OF TRACKS (Number of transceiver modules, 1 or 2)	1 ■ 2 ☐	1 ☐ 2 ☐	1 ☐ 2 ■
FREQUENCY (MS/GCP) . GCP	156 Hz	156 Hz	86 Hz
UNIDIRECTIONAL/BIDIRECTIONAL	T1: UNI ☐ BI ■	UNI ☐ BI ☐	UNI ☐ BI ■
	T2: UNI ☐ BI ☐	UNI ☐ BI ☐	UNI ☐ BI ■
XMIT LEVEL	T1: HI ☐ MED ■	HI ☐ MED ☐	HI ■ MED ☐
	T2: HI ☐ MED ☐	HI ☐ MED ☐	HI ■ MED ☐
PREDICTOR/MOTION SENSOR	T1: PRED ■ MS ☐	PRED ☐ MS ☐	PRED ■ MS ☐
	T2: PRED ☐ MS ☐	PRED ☐ MS ☐	PRED ■ MS ☐
WARNING TIME SELECTED	T1: 35 sec.	sec.	46 35 sec.
	T2: sec.	sec.	46 35 sec.
APPROACH DISTANCE SELECTED	T1: 1573' ft.	ft.	4635 4340 ft.
	T2: ft.	ft.	4635 4490 ft.
APPROACH DISTANCE COMPUTED	T1: ft.	ft.	5109 ft.
	T2: ft.	ft.	5820 ft.
UAX PICKUP DELAY (UAX1) (0 = OFF)	0 sec.	sec.	25 sec.
ENA/UAX2 DELAY (0 = ENA)	0 sec.	sec.	25 sec.
ISLAND DISTANCE (between Island track wire connections)	T1: 0 ft.	ft.	0 ft.
	T2: 0 ft.	ft.	0 ft.
NUMBER OF DAX'S	0 ☐ 1 ■ 2 ☐ 3 ☐ 4 ☐	0 ☐ 1 ☐ 2 ☐ 3 ☐ 4 ☐	0 ☐ 1 ☐ 2 ☐ 3 ☐ 4 ■
DAX A TRACK ASSIGNMENT	T1 ■ T2 ☐	T1 ☐ T2 ☐	T1 ■ T2 ☐
DAX A DISTANCE (0=PREEMPT)	16th ST. 1185 ft.	ft.	1061 ft.
DAX A WARNING TIME	35 sec.	sec.	35 sec.
DAX B TRACK ASSIGNMENT	T1 ☐ T2 ☐	T1 ☐ T2 ☐	T1 ☐ T2 ■
DAX B DISTANCE (0=PREEMPT)	ft.	ft.	1061 ft.
DAX B WARNING TIME	sec.	sec.	35 sec.
DAX C TRACK ASSIGNMENT	T1 ☐ T2 ☐	T1 ☐ T2 ☐	T1 ☐ T2 ■
DAX C DISTANCE (0=PREEMPT)	ft.	ft.	PRIME 0 ft.
DAX C WARNING TIME	sec.	sec.	35 46 sec.
DAX D TRACK ASSIGNMENT	T1 ☐ T2 ☐	T1 ☐ T2 ☐	T1 ■ T2 ☐
DAX D DISTANCE (0=PREEMPT)	ft.	ft.	PRIME 0 ft.
DAX D WARNING TIME	sec.	sec.	35 46 sec.

PROGRAMMING HISTORY (continued)

	Initial Programmed Value Date: 4-19-90	Program Change Date:	Program Change Date: 2-18-13
SLAVING MASTER/SLAVE	MASTER ■ SLAVE ☐	MASTER ☐ SLAVE ☐	MASTER ■ SLAVE ☐
PASSWORD ENABLED	DISABLED ☐	DISABLED ☐	DISABLED ■
	ENABLED ■	ENABLED ☐	ENABLED ☐
RECORDER INSTALLED	NOT INSTALLED ☐	NOT INSTALLED ☐	NOT INSTALLED ☐
	INSTALLED ■	INSTALLED ☐	INSTALLED ■
RS-232-C BAUD RATE	9600 bps	bps	9600 bps
RS-232-C DATA BITS	7 ☐ 8 ☐	7 ☐ 8 ☐	7 ☐ 8 ■
RS-232-C STOP BITS	1 ☐ 2 ☐	1 ☐ 2 ☐	1 ■ 2 ☐
RS-232-C PARITY	NONE ☐ MARK ☐	NONE ☐ MARK ☐	NONE ■ MARK ☐
	ODD ☐ SPACE ☐	ODD ☐ SPACE ☐	ODD ☐ SPACE ☐
(NOTE: SET DATE & TIME AS REQUIRED)	EVEN ☐	EVEN ☐	EVEN ☐
DATE (e.g., 4 NOV 1993)			
TIME (e.g., 11:25:43 AM)			
DAYLIGHT SAVINGS	ON ☐ OFF ☐	ON ☐ OFF ☐	ON ☐ OFF ■

EXPANDED PROGRAMMING HISTORY (Function Mode, Optional)

	Initial Programmed Value Date:	Program Change Date:	Program Change Date:
■ press FUNCTION key			
SWITCH TO MS (enter EZ value)	T1: 10 EZ.	EZ.	10 sec.
	T2: 0 EZ.	EZ.	10 sec.
TRANSFER DELAY MS TO GCP (0=OFF)	T1: 0 ft.	ft.	0 ft.
	T2: 0 ft.	ft.	0 ft.
PRIME PREDICTION OFFSET (0=OFF)	T1: 0 ft.	ft.	0 ft.
	T2: 0 ft.	ft.	0 ft.
PICKUP DELAY PRIME	15 sec.	sec.	30 sec.
PICKUP DELAY DAX A	15 sec.	sec.	15 sec.
PICKUP DELAY DAX B	N/A sec.	sec.	15 sec.
PICKUP DELAY DAX C	N/A sec.	sec.	15 sec.
PICKUP DELAY DAX D	N/A sec.	sec.	15 sec.
COMPENSATION VALUE	T1: 1100 sec.	sec.	1300 sec.
COMPENSATION VALUE	T2: 1100 sec.	sec.	1300 sec.

		FULL TRACK (NO HARDWIRE SHUNT)	FULL TRACK (HARDWIRE SHUNT AT TERMINATION)	50 PERCENT TRACK (HARDWIRE SHUNT) NO LINEARIZATION	LINEARIZATION STEP +/-	LINEARIZATION EZ
		/	/	/		
NBM	SOUTH EZ/EX					
NBM	NORTH EZ/EX					

SII 07 AUG 2014

PROPOSED
DESIGN NO. 13-0463
RED-IN YELLOW-OUT

AS INSTALLED
DATE _____
BY _____
(PRINT NAME)

PROPOSED D	PROPOSED M	PROPOSED Y	REVISIONS	D	C	COMPLETED D	COMPLETED M	COMPLETED Y	C
			AS INSTALLED			07	05	13	APL
07	08	14	ADD PREEMPT	NAD	MRB				

REGION SOUTHERN
SUB. JOLIET 350
CN

SIGNALS AND COMMUNICATIONS HOMEWOOD
12 JANUARY 1998
DES. WJL
CH.
SB GCP APPLICATION "A" & "D" TRACKS
LOCKPORT, IL
13TH ST.
JOL-032.89-09
DOT# 289 755V

SIEMENS INDUSTRY INC
DES.: APL | DATE: 07-05-13 | JOB NO.:
CKD.: BJW | ISSUE DATE: N/A | EST. NO.: JXXD03631
DRN.: APL | PLAN NO.: N/A | SHEET 9 OF 14
P TIME: 17:19 | P DATE: $$PLOT_DATE | CAD ID.: JOL-032.89-09

SIEMENS INDUSTRY INC
LOUISVILLE DIVISION, LOUISVILLE, KY

jol-032.89-09.dgn
14-AUG-2014

REVISIONS				
NO.	DATE	BY	DESCRIPTION	APP. BY
1	07/05/13	APL	SSCCIV UPGRADE	BJW
2				
3				
4				
5				

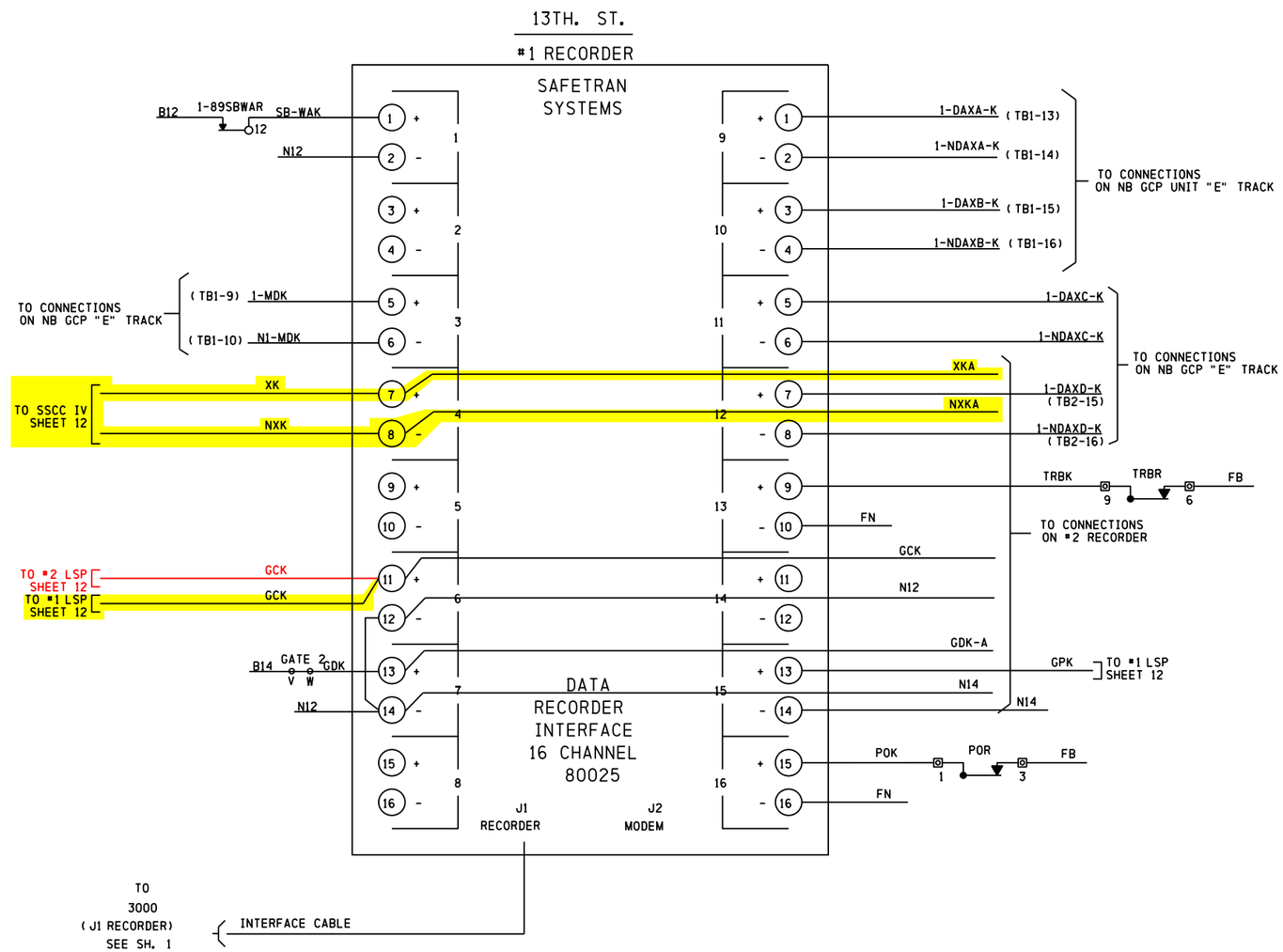

SII 07 AUG 2014

PROPOSED
DESIGN NO. 13-0463
RED-IN YELLOW-OUT

AS INSTALLED
DATE
BY
(PRINT NAME)

PROPOSED D	PROPOSED M	PROPOSED Y	REVISIONS	D	C	COMPLETED D	COMPLETED M	COMPLETED Y	C
			AS INSTALLED			07	05	13	APL
07	05	13	SSCC IV UPGRADE	APL	BJW	06	08	14	NAD
07	08	14	ADD PREEMPT	NAD	MRB				

REGION SOUTHERN
SUB. JOLIET 350
SIGNALS AND COMMUNICATIONS HOMEWOOD
DES. WJL
12 JANUARY 1998
CH.
#1 RECORDER CIRCUITS
LOCKPORT, IL
13TH ST.
JOL-032.89-10

DOT# 289 755V

SIEMENS INDUSTRY INC
DES.: APL | DATE: 07-05-13 | JOB NO.:
CKD.: BJW | ISSUE DATE: N/A | EST. NO.: JXXD03631
DRN.: APL | PLAN NO.: N/A | SHEET 10 OF 14
P TIME: 17:19 | P DATE: $$PLOT_DATE | CAD ID.: JOL-032.89-10

SIEMENS INDUSTRY INC
LOUISVILLE DIVISION, LOUISVILLE, KY

jol-032.89-10.dgn
14-AUG-2014

REVISIONS				
NO.	DATE	BY	DESCRIPTION	APP. BY
1	07/05/13	APL	SSCCIV UPGRADE	BJW
2				
3				
4				
5				

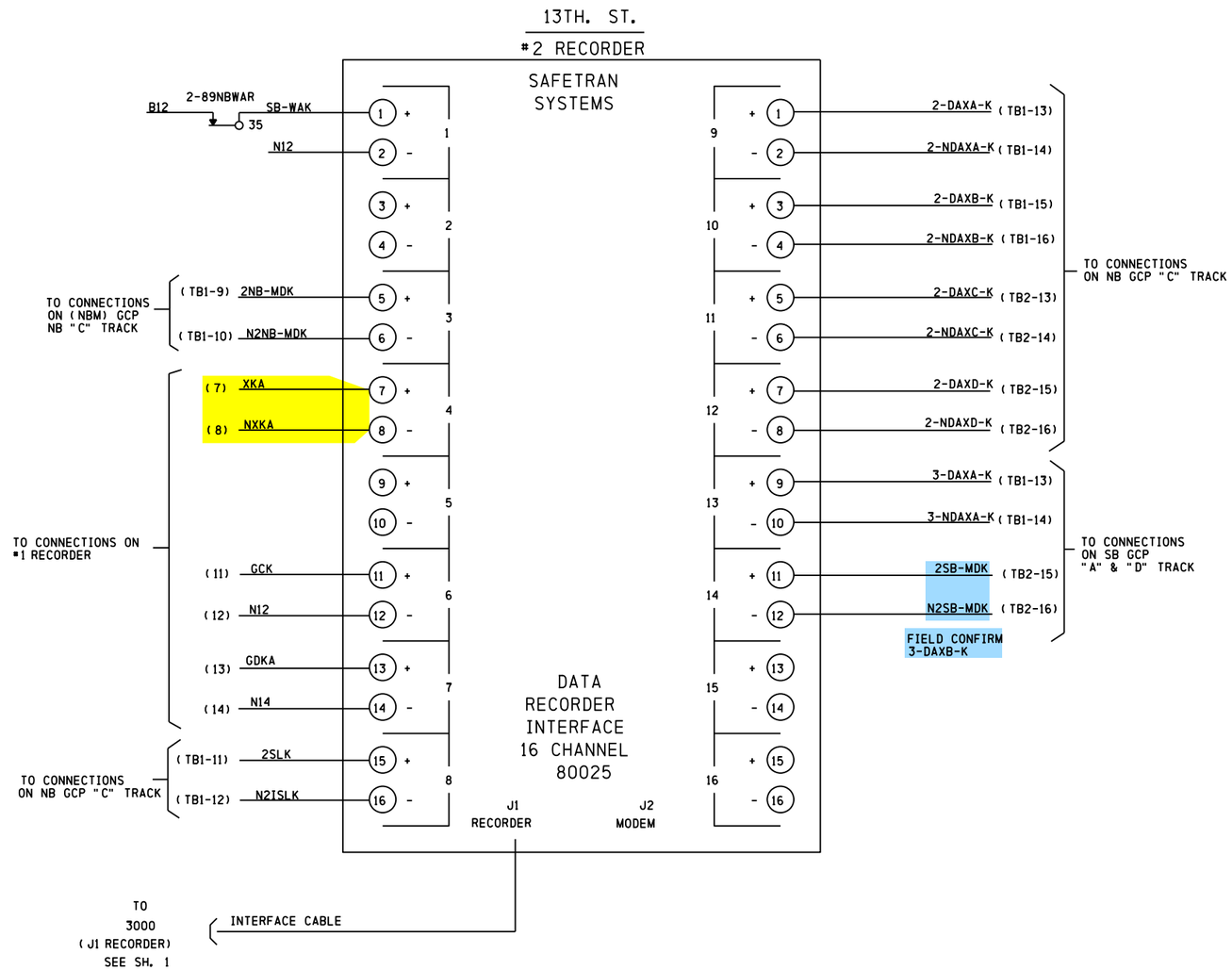

SIEMENS INDUSTRY INC			
DES.: APL	DATE: 07-05-13	JOB NO.:	
CKD.: BJW	ISSUE DATE: N/A	EST. NO.: UXXD03631	
DRN.: APL	PLAN NO.: N/A	SHEET 11 OF 14	
P TIME: 17:19	P DATE: $$PLOT_DATE	CAD ID.: JOL-032.89-11	

TO BE CONFIRMED

CONFIRMED
DATE _____
BY _____
(PRINT NAME)

SII 07 AUG 2014

PROPOSED
DESIGN NO. 13-0463
RED-IN YELLOW-OUT

AS INSTALLED
DATE _____
BY _____
(PRINT NAME)

PROPOSED D	PROPOSED M	PROPOSED Y	REVISIONS	D	C	COMPLETED D	COMPLETED M	COMPLETED Y	C
			AS INSTALLED			07	05	13	APL
07	05	13	SSCC IV UPGRADE	APL	BJW	06	08	14	NAD
07	08	14	ADD PREEMPT	NAD	MRB				

REGION SOUTHERN
SUB. JOLIET 350
SIGNALS AND COMMUNICATIONS HOMEWOOD
DES. WJL
12 JANUARY 1998
CH.
#2 RECORDER CIRCUITS
LOCKPORT, IL
13TH ST.
JOL-032.89-11

SIEMENS INDUSTRY INC
LOUISVILLE DIVISION, LOUISVILLE, KY

DOT# 289 755V

jol-032.89-11.dgn
14-AUG-2014

REVISIONS				
NO.	DATE	BY	DESCRIPTION	APP. BY
1	07/05/13	APL	SSCCIV UPGRADE	BJW
2				
3				
4				
5				

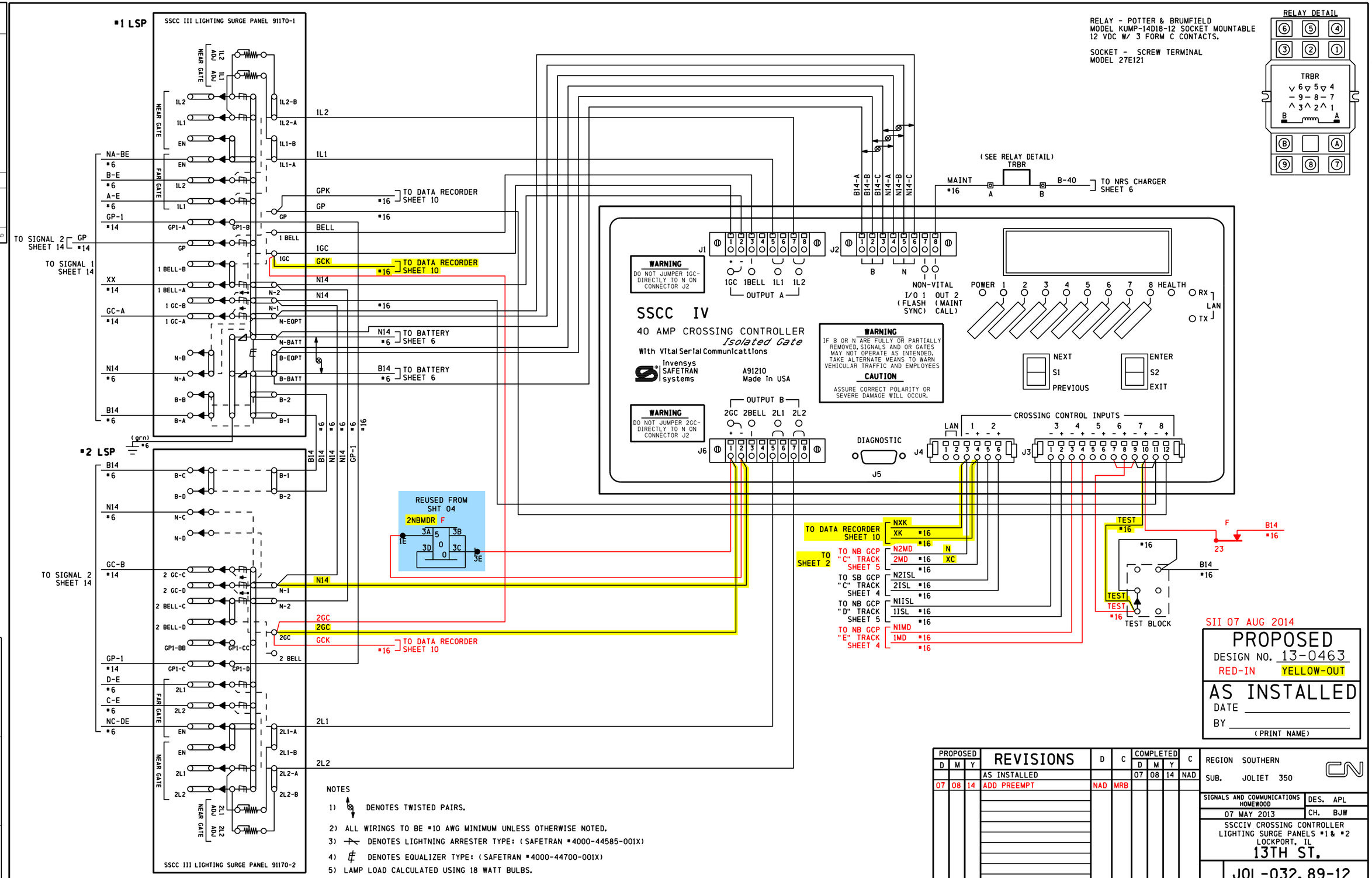

jol-032.89-12.dgn
14-AUG-2014

SII 07 AUG 2014

PROPOSED
DESIGN NO. 13-0463
RED-IN YELLOW-OUT

AS INSTALLED
DATE _____
BY _____
(PRINT NAME)

PROPOSED D	M	Y	REVISIONS	D	C	COMPLETED D	M	Y	C
			AS INSTALLED			07	08	14	NAD
07	08	14	ADD PREEMPT	NAD	MRB				

REGION SOUTHERN
SUB. JOLIET 350

SIGNALS AND COMMUNICATIONS HOMEWOOD
07 MAY 2013
DES. APL
CH. BJW

SSCCIV CROSSING CONTROLLER
LIGHTING SURGE PANELS #1 & #2
LOCKPORT, IL
13TH ST.

JOL-032.89-12

DOT# 289 755V

SIEMENS INDUSTRY INC			
DES. : APL	DATE: 07-05-13	JOB NO. :	
CKD. : BJW	ISSUE DATE: N/A	EST. NO. :	JXXD03631
DRN. : APL	PLAN NO. : N/A	SHEET 12 OF 14	
P TIME: 17:19	P DATE: $$PLOT_DATE	CAD ID. :	JOL-032.89-12

SIEMENS INDUSTRY INC
LOUISVILLE DIVISION, LOUISVILLE, KY

REVISIONS				
NO.	DATE	BY	DESCRIPTION	APP. BY
1	07/05/13	APL	SSCCIV UPGRADE	BJW
2				
3				
4				
5				

CROSSING CONTROLLER SSCCIV 40-AMPERE UNIT, A91210

PROGRAM	NOTES	INITIAL SETTING BY: _____ DATE: _____
FLASH RATE:	30-70 FLASHES/MINUTE DEFAULT = 50	55 FLASHES/MINUTE
GATES USED:	YES/NO DEFAULT = YES	☑ YES ☐ NO
1 GC DELAY:	3-20 SEC., DEFAULT = 4	4 SECONDS
2 GC DELAY (40 AMP UNIT):	3-20 SEC., DEFAULT = 4	4 SECONDS
GATE RISING BELL:	ON/OFF, DEFAULT = ON	☐ ON ☑ OFF
ENABLED INPUTS:	1 THRU 7 ONLY	☑1 ☑2 ☑3 ☑4 ☐5 ☑6 ☑7
GC2/I7:	GC2 NORMAL, I7 = NORMAL GC2 INVERTED, I7 = NORMAL GC2 PRMT RELAY, I7 = PRMT HEALTH GC2 BEACONFDBK	☑ NORMAL ☐ INVERTED ☑ PRE-EMPT SIM ☐ PRE-EMPT ADV ☐ BEACON
INPUT 7	INPUT, PRMT HLTH, TEST SW	☐ IN ☑ HEALTH ☑ TEST SW
TEST SW 2TRKDSTK ONLY	ACTIVATE, ACT & STICK RELEASE	☐ ACTIVATE ☐ ACT & REL
ADV PRE-EMPT TIME (40A):	1-99 SEC., DEFAULT = 1	N/A SECONDS
MIN ACTIVATION TIME:	0-99 SEC., DEFAULT = 20	20 36 SECONDS
STICK RELEASE TIME:	5-120 MIN., DEFAULT = 15	N/A MINUTES
BEACON PICK-UP DELAY	5-600 SEC., DEFAULT = 20	N/A SECONDS
SUP ISLAND TIME:	5-20 MIN., DEFAULT = 20	N/A MINUTES
ENABLED OUTPUTS: (40 amp only)	DEFAULT = A + B	☑ A + B ☐ A ☐ B
DAYLIGHT SAVINGS:	DEFAULT = DISABLED	☑ ENABLED ☐ DISABLED
DATE:	N/A	☐ DATE SET
TIME:	24-FORMAT	☐ TIME SET
PASSWORD:	DEFAULT = DISABLED	☐ ENABLED ☑ DISABLED
CONFIGURE		
LOS TIMERS:	0-20 SECONDS, INPUTS 1-7 ONLY DEFAULT = 0	1: 0 SEC 5: 0 SEC 2: 0 SEC 6: 0 SEC 3: 0 SEC 7: 0 SEC 4: 0 SEC
MCF:		MCF: BASICPLS CRC: 731AF326
ATCS ADDRESS:	DEFAULT = 700000000000	
LOW BATTERY:	9.0-15.0 VOLTS, OR DISABLED DEFAULT = DISABLED	☑ DISABLED ☐ ENABLED _____ VOLTS
AUX I/O:	DEFAULT = NONVITAL OUTPUT	☑ NV OUTPUT ☐ FLASH SYNC IN ☐ FLASH SYNC OUT
DETECT LAMP NEUTRAL WIRE	DEFAULT = YES	☐ YES ☑ NO
TEST CONFIGURE		
LAMP TEST CANCEL TIMER:	1-15 MINUTES, DEFAULT = 5	5 MINUTES
LAMP TEST DELAY TIMER:	30-120 SEC., DEFAULT = 30	30 SEC.
LAMP TEST ON TIMER:	15-60 SEC., DEFAULT = 15	15 SEC.

STANDARD SETUP LAMP VOLTAGES PROCEDURE
USING TRUE RMS AC+DC METER, OR CONVERSION TABLE BELOW

SETUP LAMP VOLTAGES	INITIAL SETTINGS BY: _____ DATE: _____ METER: _____
FAR GATE	1 L1 = _____ VOLTS 1 L2 = _____ VOLTS 2 L1 = _____ VOLTS 2 L2 = _____ VOLTS
SSCCIV	1 L1 = _____ VOLTS 1 L2 = _____ VOLTS 2 L1 = _____ VOLTS 2 L2 = _____ VOLTS
NEAR GATE	1 L1 = _____ VOLTS 1 L2 = _____ VOLTS 2 L1 = _____ VOLTS 2 L2 = _____ VOLTS

MULTIMETER READING VARIANCE FROM ACTUAL LAMP VOLTAGE

BATTERY BANK VOLTAGE	VALID LAMP OUTPUT RANGE (in volts)	DIGITAL METER (FLUKE 87 OR EQUIVALENT)	ANALOG METER (SIMPSON 260 OR TS111)
13.3	9.0 TO 12.0	1.3 VOLTS BELOW ACTUAL VALUE	0.6 VOLTS BELOW ACTUAL VALUE
14.7	9.0 TO 12.0	2.2 VOLTS BELOW ACTUAL VALUE	1.1 VOLTS BELOW ACTUAL VALUE
15.8	9.0 TO 12.0	2.6 VOLTS BELOW ACTUAL VALUE	2.0 VOLTS BELOW ACTUAL VALUE

FOR LAMP OUTPUT SETTINGS GREATER THAN 12.0 VOLTS, REDUCE THE LISTED VALUES BY 30%
LAMP VOLTAGE MEASUREMENTS SHOULD BE ACCURATE TO 0.3 VOLTS.

SOFTWARE VERSION: 9V546-A01.N

jol-032.89-13.dgn
14-AUG-2014

SII 07 AUG 2014

PROPOSED
DESIGN NO. 13-0463
RED-IN YELLOW-OUT

AS INSTALLED
DATE _____
BY _____
(PRINT NAME)

PROPOSED D	M	Y	REVISIONS	D	C	COMPLETED D	M	Y	C
			AS INSTALLED			07	08	14	NAD
07	08	14	ADD PREEMPT	NAD	MRB				

REGION SOUTHERN
SUB. JOLIET 350
SIGNALS AND COMMUNICATIONS HOMEWOOD
07 MAY 2013
DES. APL
CH. BJW
SSCCIV PROGRAM DATA
LOCKPORT, IL
13TH ST.
JOL-032.89-13
DOT# 289 755V

SIEMENS INDUSTRY INC
DES.: APL | DATE: 07-05-13 | JOB NO.:
CKD.: BJW | ISSUE DATE: N/A | EST. NO.: JXXD03631
DRN.: APL | PLAN NO.: N/A | SHEET 13 OF 14
P TIME: 17:19 | P DATE: $$PLOT_DATE | CAD ID.: JOL-032.89-13

SIEMENS INDUSTRY INC
LOUISVILLE DIVISION, LOUISVILLE, KY

REVISIONS				
NO.	DATE	BY	DESCRIPTION	APP. BY
1	07/05/13	APL	SSCCIV UPGRADE	BJW
2				
3				
4				
5				

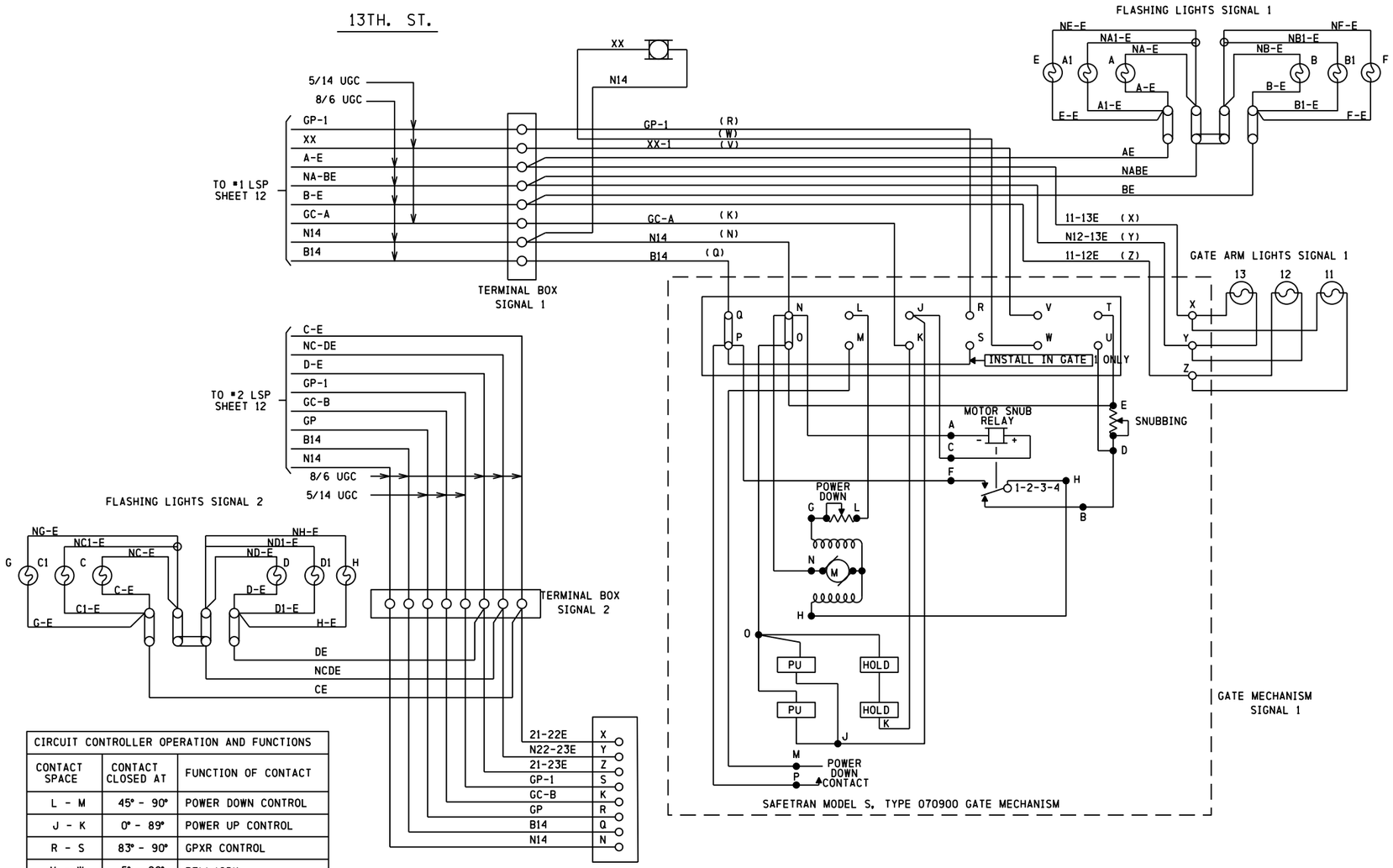

CIRCUIT CONTROLLER OPERATION AND FUNCTIONS		
CONTACT SPACE	CONTACT CLOSED AT	FUNCTION OF CONTACT
L - M	45° - 90°	POWER DOWN CONTROL
J - K	0° - 89°	POWER UP CONTROL
R - S	83° - 90°	GPXR CONTROL
V - W	5° - 90°	BELL/GDK
T - U	0° - 5°	MOTOR SNUB CONTROL

SII 07 AUG 2014

PROPOSED
DESIGN NO. 13-0463
RED-IN YELLOW-OUT

AS INSTALLED
DATE _____
BY _____
(PRINT NAME)

PROPOSED D	PROPOSED M	PROPOSED Y	REVISIONS	D	C	COMPLETED D	COMPLETED M	COMPLETED Y	C
			AS INSTALLED			07	05	13	APL
07	05	13	SSCC IV UPGRADE	APL	BJW	06	08	14	NAD
07	08	14	ADD PREEMPT	NAD	MRB				

REGION SOUTHERN
SUB. JOLIET 350
SIGNALS AND COMMUNICATIONS HOMEWOOD
12 JANUARY 1998
DES. WJL
CH.
GATE CONTROLS
LOCKPORT, IL
13TH ST.
JOL-032.89-14

DOT# 289 755V

SIEMENS INDUSTRY INC
DES.: APL | DATE: 07-05-13 | JOB NO.:
CKD.: BJW | ISSUE DATE: N/A | EST. NO.: UXXD03631
DRN.: APL | PLAN NO.: N/A | SHEET 14 OF 14
P TIME: 17:19 | P DATE: $$PLOT_DATE | CAD ID.: JOL-032.89-14

SIEMENS INDUSTRY INC
LOUISVILLE DIVISION, LOUISVILLE, KY

jol-032.89-14.dgn
14-AUG-2014