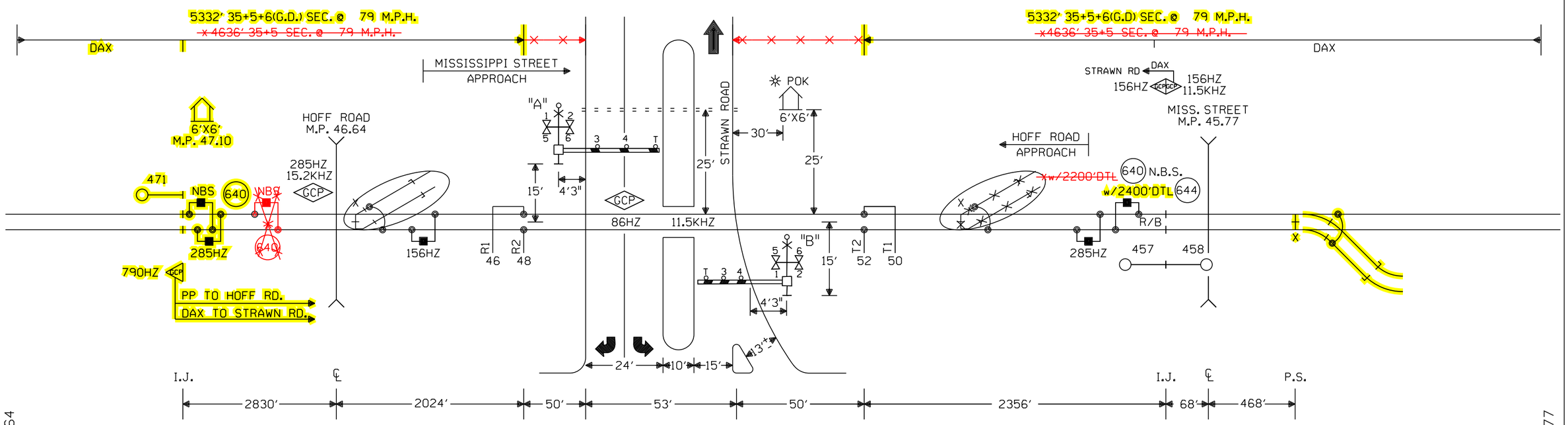

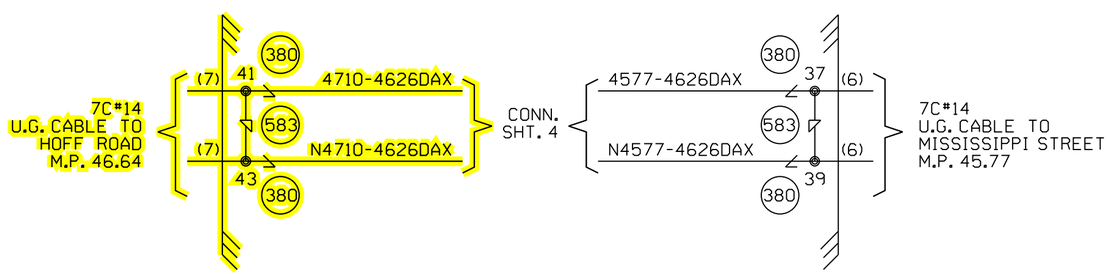

CONNECTS TO DRAWING 46.64

CONNECTS TO DRAWING 45.77

NOTES:

⊗ = TWISTED WIRES
INSULATED 1 TWIST PER FT.
ALL TRACK WIRES 2C. #6

TRANSMITTER AND RECEIVER LEADS TO BE SEPARATED BY AT LEAST 12" IN TRENCH, LENGTHS SHOULD NOT EXCEED MANUFACTURES RECOMMENDATION.

TOP OF FOUNDATION TO BE AT SAME ELEVATION AS THE SURFACE OF THE TRAVELED WAY & NO MORE THAN 4" ABOVE THE SURFACE OF THE GROUND.

ALL BUNGALOW WIRING TO BE #16 AWG FLEX UNLESS OTHERWISE SPECIFIED EXCEPT ALL GROUND WIRE TO BE #6 AWG FLEX OR LARGER.

ALL WIRING IN GATE MECHANISM TO BE #10 "AWG FLEX".

REFER TO UP STANDARD DWG FOR BUNGALOW GROUNDING.

DO NOT USE 7 CELLS OF B12 BATTERY UNLESS REQUIRED TO MAINTAIN MINIMUM LAMP VOLTAGE.

ALL LIGHTS TO BE 12" ROUNDELS.

= = = = = = 4" X 70' CONDUIT

LIGHTS: LED LIGHTS

GATE A: 28'
GATE B: 27'

CRTU MICROBURST

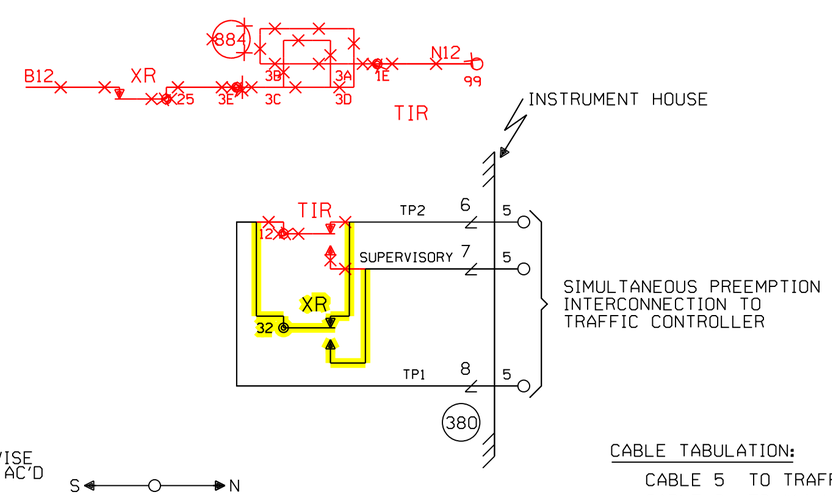

= IN
= OUT
= EXISTING REVISE ORIGINAL IF AC'D

S ← → N

CONSTRUCTION NOTES

1. MOVE EXISTING SOUTH APPROACH 86 HZ NBS TO JOINTS
2. ORDER AND INSTALL (1) TAB 664 2 INPUT AND GATE
3. ORDER AND INSTALL 2500' OF 7C#14 FROM M.P. 46.64 TO M.P. 46.26
4. ORDER AND INSTALL 2400' OF D.T.L. FOR 86 HZ SHUNT IN NORTH APPROACH
5. ORDER AND INSTALL (2) TAB 893 SLOW RELEASE RELAYS
6. ORDER AND INSTALL (2) 80016 DAX MODULES AT M.P. 47.10

CABLE TABULATION:

CABLE 5 TO TRAFFIC CONTROLLER
CABLE 6 7C #14 U.G. CABLE TO M.P. 45.77
CABLE 7 7C #14 U.G. CABLE TO M.P. 46.64

ELWOOD, ILLINOIS
STRAWN ROAD
M.P. 46.26
JOLIET SUBDIVISION
D.O.T.#922 023D

Designed: 6/26/14 INSTALL 6 SECONDS OF GATE DELAY TIME AT M.P. 46.26 STRAWN ROAD	REV. 1-13-06 INSTALL NEW GATES & CWT CIRCUITS IN A NEW BUNGALOW & RELOCATE WAYSIDE SIGNALS (457-458) @ MISSISSIPPI STREET. WO#43975 REC#13558 WO#44357 10-6-05 RLT/RDD RD/WITT/WITT/JNM	REV. 1-13-06 INSTALL FLASHERS AND GATES WITH CWT REC#13558 10-6-05 JTB RS/WITT/SSC/JNM	Rec#: WO#: IS: / / /JPW/JTB

MODIFICATION LEVEL	
Q.A. LAST LEVEL CHK'D.	DD
LAST LEVEL MOD. THIS TYP.	DB
LAST LEVEL BY DESIGNER.	DF
CHANGED FROM TYP.? Y/N	Y

CIRCUIT MODIFICATIONS ARE NOT TO BE MADE WITHOUT AUTHORITY FROM THE OFFICE OF SIGNAL DESIGN

DES: SSC
DIG: SSC
CHK: RLT/JTB
A.F.E. 08343
ID= CSL4626.1X

UNION PACIFIC RAILROAD
JOLIET, ILLINOIS TO
BLOOMINGTON, ILLINOIS
A.B.S. CIRCUITS
OFFICE OF CHIEF ENG'R OMAHA NEBR.

DATE 09-20-02
SHEET 1
DWG 46.26
RTE-CSL

CSL4626.1x.1 7/23/2014 12:39:14 PM

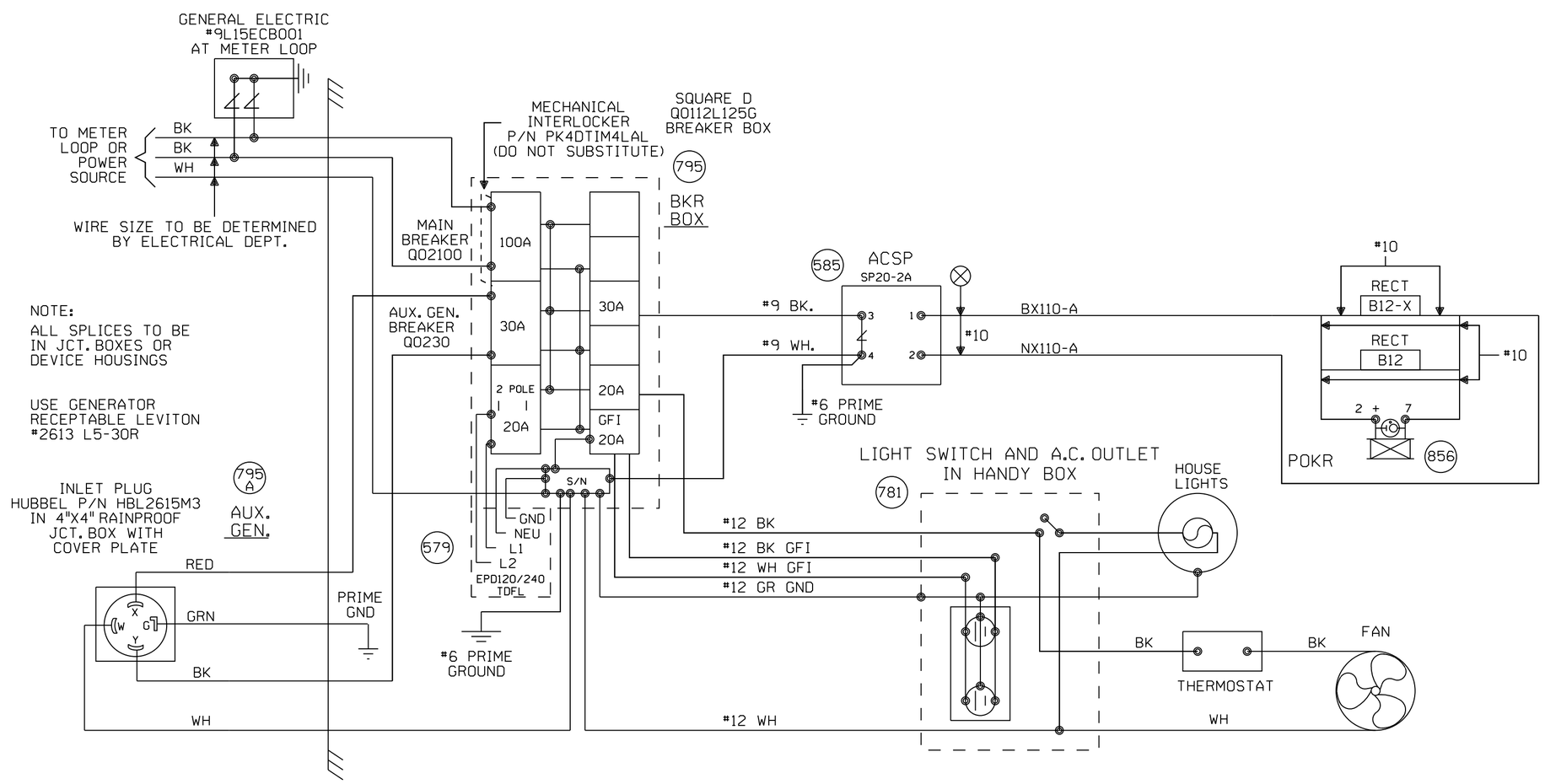

LOD NOTES:

1. THE POWER FOR AN LOD MUST BE WIRED TO THE SAME SOURCE AS THE LIGHTS THEY ARE MONITORING.
2. ONE REFERENCE VOLTAGE PER LOD PER HCA ANALOG INPUT.
3. A RESISTOR MUST ALWAYS BE INSTALLED IN SERIES BETWEEN THE LOD OUTPUTS AND THE HCA ANALOG INPUTS.
4. THE NUMBER OF UNIQUE REFERENCE VOLTAGES IS DETERMINED BY THE NUMBER OF UNIQUE BATTERY BANKS AND/OR LIGHTING TRANSFORMERS.

HCA NOTES:

1. CPU BOARD REV LEVEL "F" OR HIGHER.
2. SOFTWARE REV LEVEL "UP1-NC" OR GREATER ON IC13.
3. DIP SWITCH #1: ON, ON, ON, OFF, ON, ON, OFF, OFF.
4. DIP SWITCH #2: OFF, OFF, OFF, OFF, OFF, OFF, OFF, OFF.
5. JUMPER ALL UNUSED DIGITAL "+" INPUTS TO POSITIVE BATERY.
6. JUMPER ALL UNUSED DIGITAL "-" INPUTS TO NEGATIVE BATTERY.
7. DO NOT JUMPER INPUTS WITH DIFFERENT VOLTAGE REFERENCES TOGETHER.
8. ALL DIODES 1N5060 OR 1N4004 UNLESS OTHERWISE NOTED.

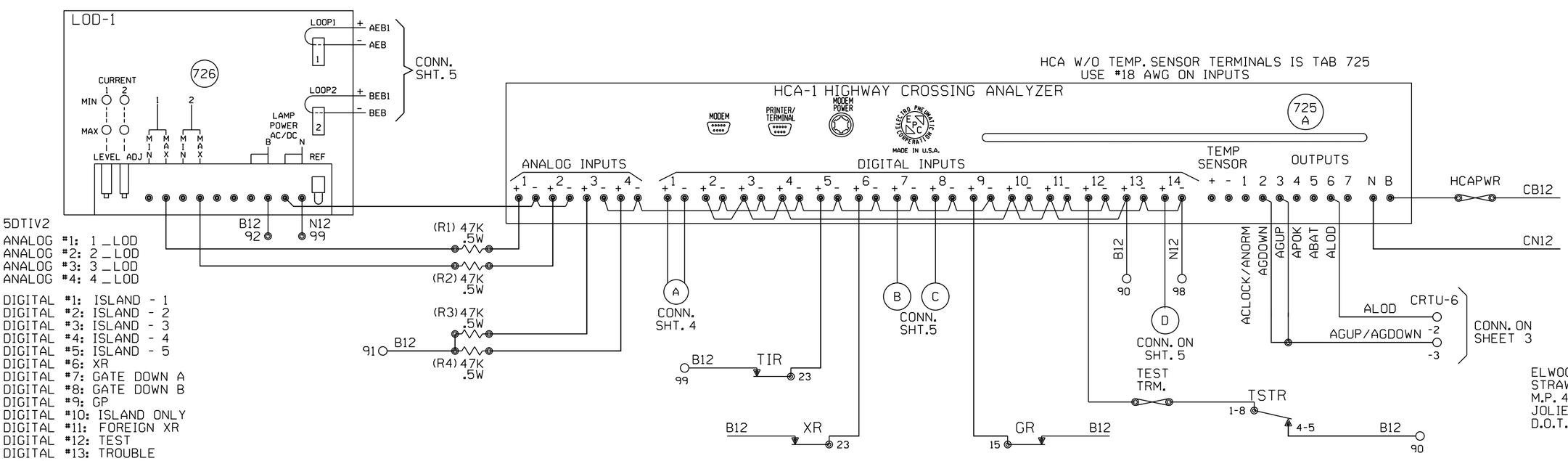

5DTIV2

ANALOG #1: 1 _LOD
ANALOG #2: 2 _LOD
ANALOG #3: 3 _LOD
ANALOG #4: 4 _LOD

DIGITAL #1: ISLAND - 1
DIGITAL #2: ISLAND - 2
DIGITAL #3: ISLAND - 3
DIGITAL #4: ISLAND - 4
DIGITAL #5: ISLAND - 5
DIGITAL #6: XR
DIGITAL #7: GATE DOWN A
DIGITAL #8: GATE DOWN B
DIGITAL #9: GP
DIGITAL #10: ISLAND ONLY
DIGITAL #11: FOREIGN XR
DIGITAL #12: TEST
DIGITAL #13: TROUBLE
DIGITAL #14: POR

ELWOOD, ILLINOIS
STRAWN ROAD
M.P. 46.26
JOLIET SUBDIVISION
D.O.T.#922 023D

					REV. 1-13-06 INSTALL FLASHERS AND GATES WITH CWT REC#13558 10-6-05 JTB RS/WITT/SSC/JNM	MODIFICATION LEVEL		CIRCUIT MODIFICATIONS ARE NOT TO BE MADE WITHOUT AUTHORITY FROM THE OFFICE OF SIGNAL DESIGN	DES: SSC DIG: SSC CHK: JTB A.F.E. 08343 ID= CSL4626.2X	UNION PACIFIC RAILROAD JOLIET, ILLINOIS TO BLOOMINGTON, ILLINOIS A.B.S. CIRCUITS OFFICE OF CHIEF ENG'R OMAHA NEBR.	DATE 09-20-02 SHEET 2 DWG 46.26 RTE-CSL
						Q.A. LAST LEVEL CHK'D.	DD				
						LAST LEVEL MOD. THIS TYP.	DB				
						LAST LEVEL BY DESIGNER.	DF				
						CHANGED FROM TYP.? Y/N	Y				

CSL4626.2x.1 7/23/2014 12:39:17 PM

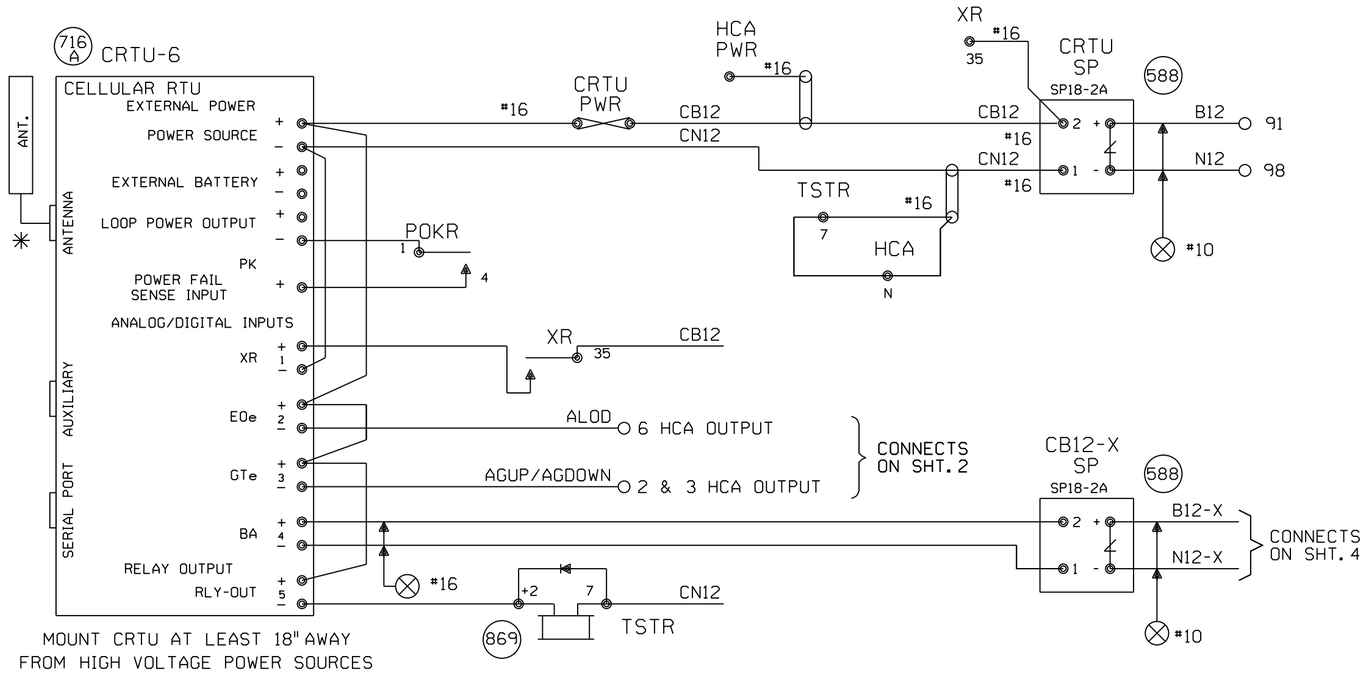

NOTES:

ALL DIODES 1N5060 OR 1N4004 UNLESS OTHERWISE NOTED.

✳ MOUNT ANTENNA ON TOP OF HOUSE.
INSTALL ANTENNA CABLE AND CHOKE
PER TECH BULLENTIN #99-0015-00

ALL WIRES #18 UNLESS OTHERWISE NOTED.

ALL UNUSED 'NC' INPUTS MUST BE TIED HIGH TO BATTERY

ALL UNUSED ANALOG INPUTS MUST BE TIED HIGH TO BATTERY

ALL UNUSED 'NO' INPUTS MUST BE DISCONNECTED

NORMAL STATE FOR ANALOG CHANNELS IS EQUAL TO THE STORED NOMINAL VOLTAGE +120% OR -81%

CRTU FRONT PANEL DISPLAY CHART INDICATES NORMAL STATE

DIGITAL INPUT HIGH, OR POWER FAIL INPUT CLOSED

DIGITAL INPUT LOW, OR POWER FAIL INPUT OPEN

L — LATCH IS SET BECAUSE CRTU DETECTED AN ALARM CONDITION

12.06V L

'sRUN MODE' 'sRUN MODE-SILENT'
CRTU RADIO IS DISABLED.
REPROGRAM CRTU WITH LAPTOP.

ANALOG AND AC INPUT MODULES AND SURGE PROTECTORS MUST BE MOUNTED LESS THAN 18" FROM CRTU

CONNECT CRTU INPUTS TO EQUIPMENT SIDE OF SP
USE EXISTING SPs WHENEVER POSSIBLE
CRTU CH4 CAN BE CONNECTED TO
EQUIPMENT SIDE OF MDSA1 OR CB12-X SP

UNIT INSTALLATION AND SETUP

R.R. SITE ID WHERE; SSSS = 4 CHARACTER SUBDIVISION ID.
FILL WITH PRECEDING ZEROS AS REQUIRED. THE MAIN TRACK SUBDIVISION ID# IS IN THE CURRENT TIMETABLE. INDUSTRIAL LEADS, LEASED, AND LEAD TRACKS LISTED WITHIN THE SUBDIVISION MAY HAVE THEIR OWN UNIQUE SUBDIVISION ID#. ALWAYS REFER TO CURRENT PRINTED COPY OF THE TIMETABLE.
LLLLLLLL = 8 CHARACTERS USE DOT# AT CROSSINGS, AND
WDLLLLLL = USE 'WD' THEN MP# AT WAYSIDE LOCATIONS.
EXAMPLE = 0785WD1801.5UT
HBLLLLLL = USE 'HB' THEN MP# AT HBD SITES.
EXAMPLE = 0100-HB55.62TX
THE MP# MUST USE A DECIMAL POINT TO SEPARATE NUMBERS.
FILL WITH PRECEDING DASHES AS REQUIRED.
AA = 2 CHARACTER STATE NAME FOR ALL LOCATIONS.
MUST BE 14 CHARACTERS LONG, NO SPACES ALLOWED.

SITE IDENTIFIER: SSSSLLLLLLLLAA	0025-922023DIL
OPERATION TO RESUME:	RUN
SIGNAL STRENGTH dBm	
CARRIER ID	
FIRMWARE VERSION	2.3.
SERIAL NUMBER	
BOOT VERSION:	
CMM VERSION:	
MIN ASSIGNMENT	
ESN: (MICROBURST ONLY)	
CONFIGURATION NET	MICROBURST
SILENCE INTERVAL	60 MINUTES
HEALTHCHECK INTERVAL	EVERY 2 DAYS
ALARM DEFER DELAY	240 MINUTES (4 HOURS)
SIGNAL STATUS	
SCADANET STATUS	
CALIBRATION CONSTANT CH1	
CALIBRATION CONSTANT CH2	
CALIBRATION CONSTANT CH3	
CALIBRATION CONSTANT CH4	
CALIBRATION CONSTANT PS	

FIELD PROVIDES: SAMPLED NOMINAL VOLTAGES, SCADANET STATUS CALIBRATION CONSTANTS, SERIAL NUMBER, AND SIGNAL STATUS.

CHANNEL SETUP - STANDARD CONFIGURATION 12:XR,EOe,GTe,Ba

CHANNEL NORMAL STATE	SENSE (NO/NC)	NAME FUNCTION	RECOGNITION DELAY SECONDS ACTIVE	RECOGNITION DELAY SECONDS NORMAL	RETURN TO NORMAL	REPORTING MODE	ALARM LINKED CHANNEL	ALARM LINKED CRITERIA	EVENT LOGGING ENABLED OPTIONS
POWER FAIL (CH5)	POWER FAIL DETECT NO	PF1n-PK AC POWER FAIL	7,200 ALARM	300 NORMAL	ENABLED	ALERT	DISABLED	N/A	ANALOG VALUE SENT
CH1	DIGITAL INPUT NO	CH1-XR XR DOWN TO LONG	1,800 ALARM	1 NORMAL	ENABLED	ALERT	DISABLED	N/A	
CH2	DIGITAL INPUT NO	CH2-EOe LIGHT OUT	120 ALARM	10 NORMAL	ENABLED	ALERT	DISABLED	N/A	
CH3	DIGITAL INPUT NO	CH3-GTe GATES NOT UP/DOWN	120 ALARM	10 NORMAL	ENABLED	ALERT	DISABLED	N/A	DIGITAL EVENTS
CH4 STORED NOMINAL VOLTAGE	ANALOG INPUT N/A	CH4-Ba/V BATTERY MONITOR BATTERY LOW	600 ALARM	1200 NORMAL	ENABLED	ALERT W/UPDATE	DISABLED	N/A	PF1n-PK CH1-XR CH2-EOe CH3-GTe
POWER SOURCE (CH6)	ANALOG INPUT N/A	PS-Ba/V BATTERY MONITOR BATTERY LOW	600 ALARM	1200 NORMAL	ENABLED	ALERT W/UPDATE	DISABLED	N/A	

ANALOG CHANNEL	USEFUL RANGE VOLTS LOW	USEFUL RANGE VOLTS HIGH	DISPLAYED RANGE VOLTS LOW	DISPLAYED RANGE VOLTS HIGH	RELATIVE ALARM POINT LOW	RELATIVE ALARM POINT HIGH	ABSOLUTE ALARM POINT LOW	ABSOLUTE ALARM POINT HIGH	AUTOMATIC UPDATE INTERVAL	STORED NOMINAL VOLTAGE	SAMPLED NOMINAL VOLTAGE
CH4	0.0	30.00	0.0	30.00	81%	120%	10.0	29.0	14 DAYS	12.69	
POWER SOURCE	0.0	30.00	0.0	30.00	81%	120%	10.0	29.0	14 DAYS	12.69	
RELAY OUTPUT	NAME RLY-OUT		ACTIVE SET-UP-OPEN		NORMAL CLR-DN-CLOSE		PULSE DURATION		15 SECONDS	StdCfg Ver: 2.3.3 REV'D 9-20-02	

MAINTENANCE OPERATIONS

TO START OR ABORT ANY PROCEDURE

1. PRESS THE 'CANCEL' BUTTON FIRST

WHEN RESPONDING TO A CALL, PUT THE CRTU IN THE 'SILENCE ALARMS' MODE

1. PRESS 'SELECT' AND THEN '+ ARROW' BUTTON UNTIL
   DISPLAY: ACTION?
   SILENCE ALARMS
2. PRESS THE 'SELECT' BUTTON TWICE
3. CORRECT PROBLEM AND SIMULATE NORMAL TRAIN MOVEMENT THROUGH THE LOCATION
4. EXAMINE EACH CHANNEL ON THE CRTU
5. PRESS THE '+/- ARROW' BUTTON
   VERIFY ALL CHANNELS INDICATE A NORMAL STATE
   NORMAL STATES ARE ON THE CHANNEL SETUP CHART

CLEAR TIMERS, LATCHES AND SEND ALL NORMAL

1. DO STEPS #1 - #5 ABOVE, AND PRESS 'CANCEL'.
2. PRESS 'SELECT' AND THEN '- ARROW' BUTTON UNTIL
   DISPLAY: ACTION?
   SERVICE MODE
3. PRESS 'SELECT' AGAIN TO RESET TIMERS, AND IF
   DISPLAY: SERVICE MODE
   ALL NORMAL
4. PRESS 'SELECT' AGAIN TO CLEAR LATCHES, AND SEND ALL NORMAL. SKIP STEPS #5-#6.
5. HOWEVER, IF ALARMS ARE NOT CLEARED;
   DISPLAY: SERVICE MODE
   ALARMS PENDING/PRESENT
6. PRESS 'CANCEL', CORRECT PROBLEM AND REPEAT STEPS #2 THRU #5 UNTIL ALL NORMAL SENT.

TO CANCEL THE 'SILENCE ALARMS' MODE

1. PRESS 'SELECT' AND THEN '+ ARROW' BUTTON UNTIL
   DISPLAY: ACTION?
   CANCEL SILENCE
2. PRESS THE 'SELECT' BUTTON AGAIN

EXAMINE & SET BATTERY VOLTAGE NOMINAL VALUE

1. PRESS THE '+ ARROW' OR '- ARROW' BUTTON UNTIL THE DESIRED CHANNEL IS DISPLAYED.
   DISPLAY: PS-BA:
   13.83V NORMAL
2. VERIFY THE DISPLAYED READING WITH A DIGITAL VOLTMETER
3. PRESS THE 'SELECT' BUTTON, AND THE CRTU DISPLAY WILL SWITCH BETWEEN CURRENT/SAVED NOMINAL VOLTAGE VALUES.
   DISPLAY: NOMINAL ON #6? (CURRENT)
   13.83
   DISPLAY: SAVED NOMINAL 6 (STORED)
   12.69
4. PRESS THE 'SELECT' BUTTON AND THE CURRENT OR 'NOMINAL ON' VALUE WILL BE SAMPLED AND STORED AS THE 'SAVED NOMINAL' VALUE
5. VERIFY THE 'NOMINAL ON' AND 'SAVED NOMINAL' VALUES ARE EQUIVALENT, REPEAT STEPS #1 THRU #3 & PRESS THE 'CANCEL' BUTTON.

ELWOOD, ILLINOIS
STRAWN ROAD
M.P. 46.26
JOLIET SUBDIVISION
D.O.T.#922 023D

REV. 1-13-06
INSTALL FLASHERS AND GATES WITH CWT

REC#13558
10-6-05 JTB
RS/WITT/SSC/JNM

MODIFICATION LEVEL	
Q.A. LAST LEVEL CHK'D.	DF
LAST LEVEL MOD. THIS TYP.	DF
LAST LEVEL BY DESIGNER.	DF
CHANGED FROM TYP.? Y/N	N

CIRCUIT MODIFICATIONS ARE NOT TO BE MADE WITHOUT AUTHORITY FROM THE OFFICE OF SIGNAL DESIGN

DES: SSC
DIG: SSC
CHK: JTB
A.F.E. 08343
ID= CSL4626.3X

UNION PACIFIC RAILROAD
JOLIET, ILLINOIS TO
BLOOMINGTON, ILLINOIS
A.B.S. CIRCUITS
OFFICE OF CHIEF ENG'R OMAHA NEBR.

DATE 09-20-02
SHEET 3
DWG 46.26
RTE-CSL

(REV. 02.02.01) CRTUCFG12-2BAT.3X

CSL4626.3x.1 7/23/2014 12:39:21 PM

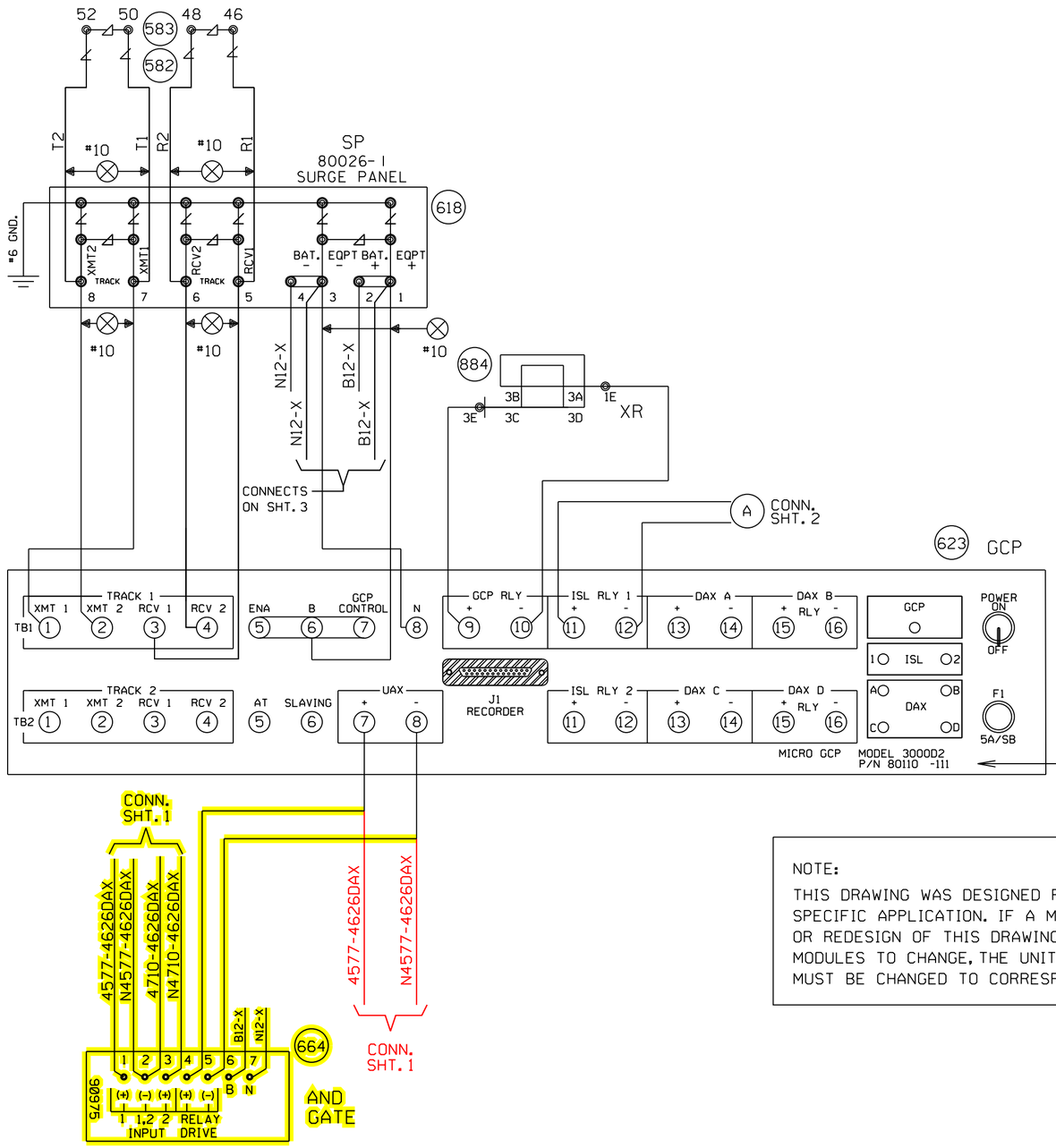

NOTE:

THIS DRAWING WAS DESIGNED FOR A SPECIFIC APPLICATION. IF A MODIFICATION OR REDESIGN OF THIS DRAWING CAUSES ANY MODULES TO CHANGE, THE UNIT'S PART NUMBER MUST BE CHANGED TO CORRESPOND ACCORDINGLY.

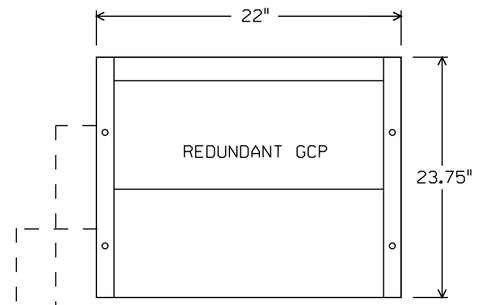

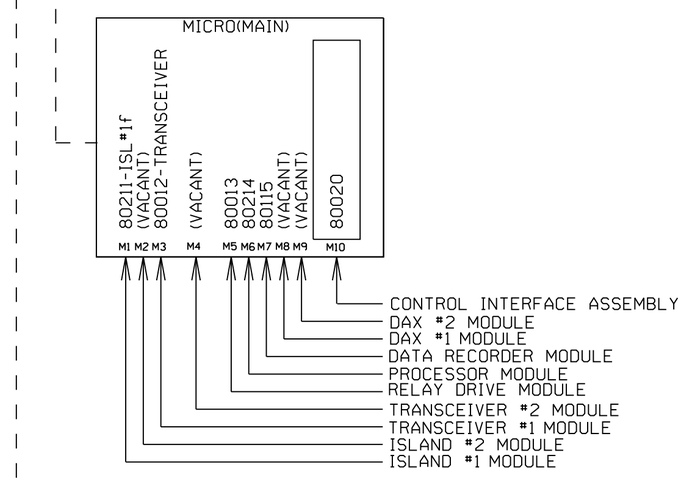

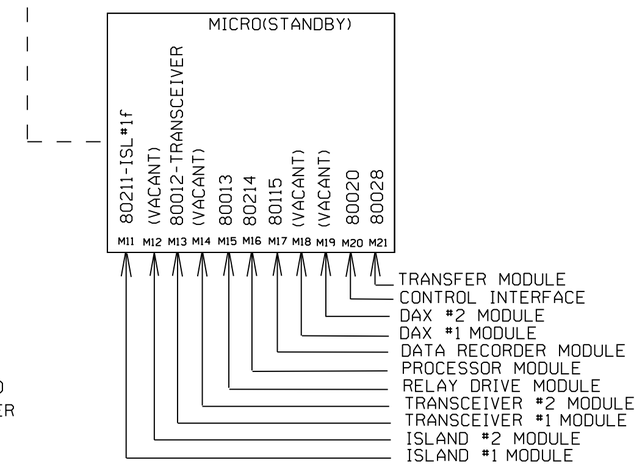

NOTE:

EACH TRANSMITTER TO RAIL WIRE FROM TB1-1 AND TB1-2 MUST NOT EXCEED THE MAXIMUM LENGTH SPECIFIED IN THE TABLE SHOWN BELOW. THE RECEIVER WIRE LENGTH IS NOT CRITICAL. DOES NOT APPLY TO 6 TRACK WIRE APPLICATION.

"Mf" FREQUENCY (HZ)	MAXIMUM TRANSMIT WIRE LENGTH (FEET)
86	100
114	125
156	150
211	200
285-970	250

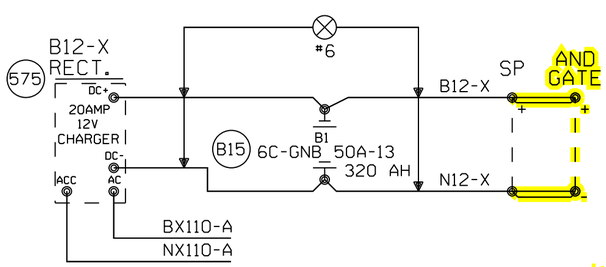

= IN
= OUT

ELWOOD, ILLINOIS
STRAWN ROAD
M.P. 46.26
JOLIET SUBDIVISION
D.O.T.#922 023D

			Designed: 6/26/14 INSTALL 6 SECONDS OF GATE DELAY TIME AT M.P. 46.26 STRAWN ROAD Rec#: WO#: IS: / / /JPW/JTB	REV. 1-13-06 INSTALL NEW GATES & CWT CIRCUITS IN A NEW BUNGALOW & RELOCATE WAYSIDE SIGNALS (457-458) @ MISSISSIPPI STREET. REC#13558 10-6-05 RLT/RDD RS/WITT/WITT/JNM	REV. 1-13-06 INSTALL FLASHERS AND GATES WITH CWT REC#13558 10-6-05 JTB RS/WITT/SSC/JNM	MODIFICATION LEVEL		CIRCUIT MODIFICATIONS ARE NOT TO BE MADE WITHOUT AUTHORITY FROM THE OFFICE OF SIGNAL DESIGN	DES: SSC	UNION PACIFIC RAILROAD JOLIET, ILLINOIS TO BLOOMINGTON, ILLINOIS A.B.S. CIRCUITS	DATE 09-20-02	
					Q.A. LAST LEVEL CHK'D.	DD		DIG: SSC		SHEET 4	
					LAST LEVEL MOD. THIS TYP.	DB		CHK: JTB		DWG 46.26	
					LAST LEVEL BY DESIGNER.	DF		A.F.E. 08343			
					CHANGED FROM TYP.? Y/N	Y		ID= CSL4626.4X	OFFICE OF CHIEF ENG'R OMAHA NEBR.	RTE-CSL	

CSL4626.4x.1 7/23/2014 12:39:25 PM

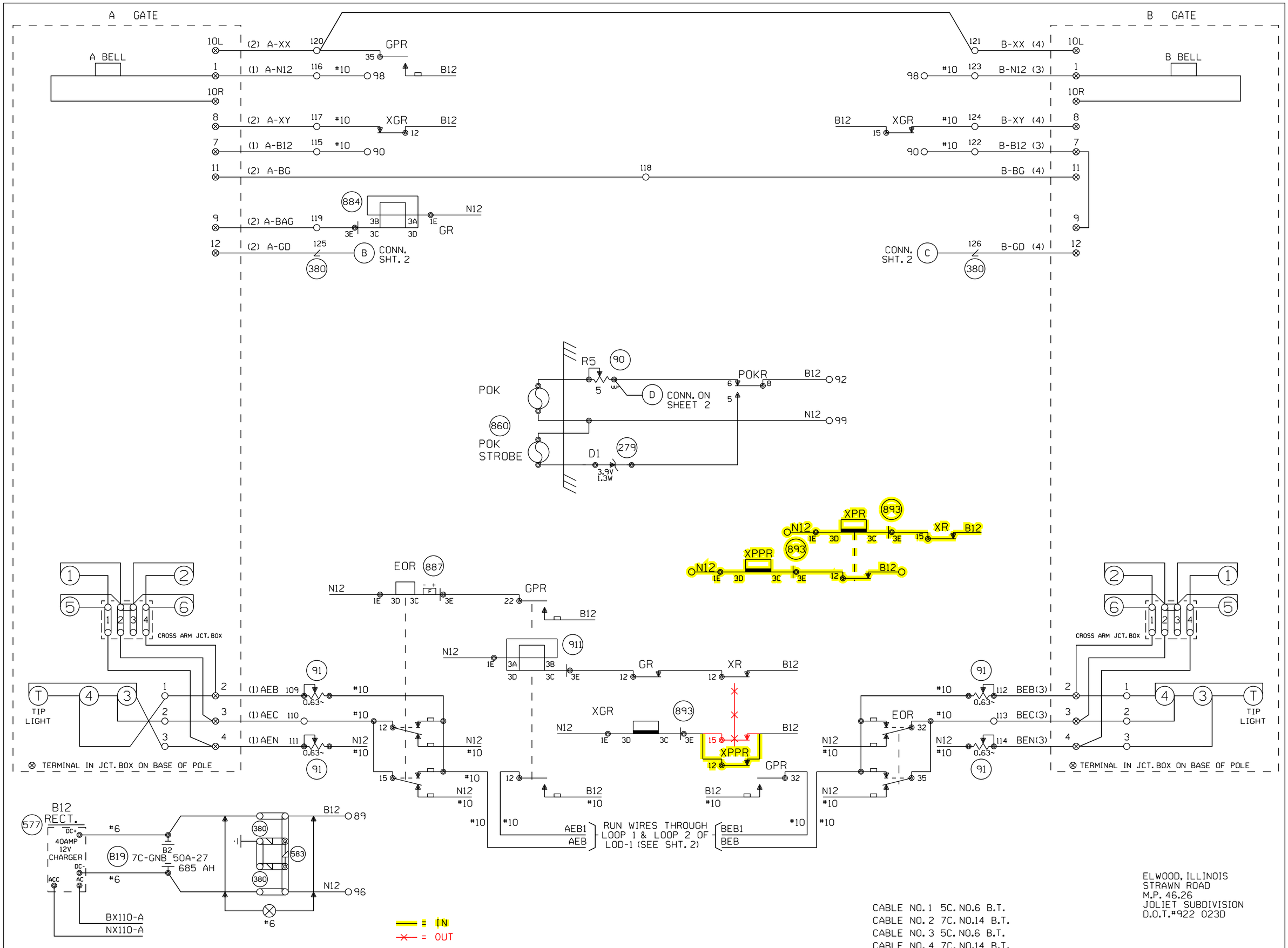

CABLE NO. 1 5C. NO.6 B.T.
CABLE NO. 2 7C. NO.14 B.T.
CABLE NO. 3 5C. NO.6 B.T.
CABLE NO. 4 7C. NO.14 B.T.

ELWOOD, ILLINOIS
STRAWN ROAD
M.P. 46.26
JOLIET SUBDIVISION
D.O.T.#922 023D

Designed: 6/26/14
INSTALL 6 SECONDS OF GATE DELAY TIME AT M.P. 46.26 STRAWN ROAD
Rec#: WO#:
IS: JPW/JTB

REV. 1-13-06
INSTALL FLASHERS AND GATES WITH CWT
REC#13558
10-6-05 JTB
RS/WITT/SSC/JNM

MODIFICATION LEVEL	
Q.A. LAST LEVEL CHK'D.	DD
LAST LEVEL MOD. THIS TYP.	DB
LAST LEVEL BY DESIGNER.	DF
CHANGED FROM TYP.? Y/N	N

CIRCUIT MODIFICATIONS ARE NOT TO BE MADE WITHOUT AUTHORITY FROM THE OFFICE OF SIGNAL DESIGN

DES: SSC
DIG: SSC
CHK: JTB
A.F.E. 08343
ID= CSL4626.5X

UNION PACIFIC RAILROAD
JOLIET, ILLINOIS TO
BLOOMINGTON, ILLINOIS
A.B.S. CIRCUITS
OFFICE OF CHIEF ENG'R OMAHA NEBR.

DATE 09-20-02
SHEET 5
DWG 46.26
RTE-CSL

(REV. 01.02.21) (GFTYP.DGN)

CSL4626.5x.1 7/23/2014 12:39:28 PM

SAFTRAN MODEL "EM" (GRISWOLD)

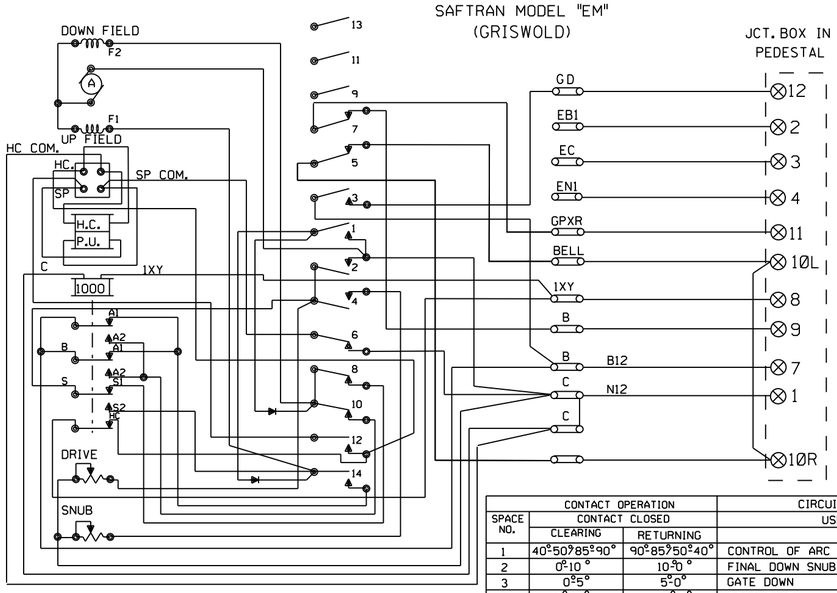

SPACE NO.	CONTACT OPERATION: CONTACT CLOSED – CLEARING	CONTACT OPERATION: CONTACT CLOSED – RETURNING	CIRCUIT BREAKER FUNCTIONS: USE OF CONTACT
1	40°50°85°90°	90°85°50°40°	CONTROL OF ARC SUPRESSING RECTIFIERS
2	0°10°	10°0°	FINAL DOWN SNUB
3	0°5°	5°0°	GATE DOWN
4	0°44°	44°0°	DOWN SNUB
5	10°90°	90°10°	TO CUT OFF BELL WHEN GATE ARM IS DOWN
6	80°90°	90°80°	CONTROL OF SOLENOID PICK UP
7	80°90°	90°80°	TO CONTROL GPR RELAY & KEEP FLASHING LIGHTS OPERATING UNTIL GATES CLEAR
8	0°5°80°90°	90°80°5°0°	UP SNUB
9	—	—	SPARE
10	45°90°	90°45°	MOTOR CUTOUT(DOWN)
11	—	—	SPARE
12	0°90°	80°0°	OPERATED BY MOTOR CUTOUT SWITCH TO CUT OFF CURRENT FROM SOLENOID PICKUP
13	—	—	NO CAM
14	0°90°	80°0°	MOTOR CUTOUT(UP)

WCH 3597

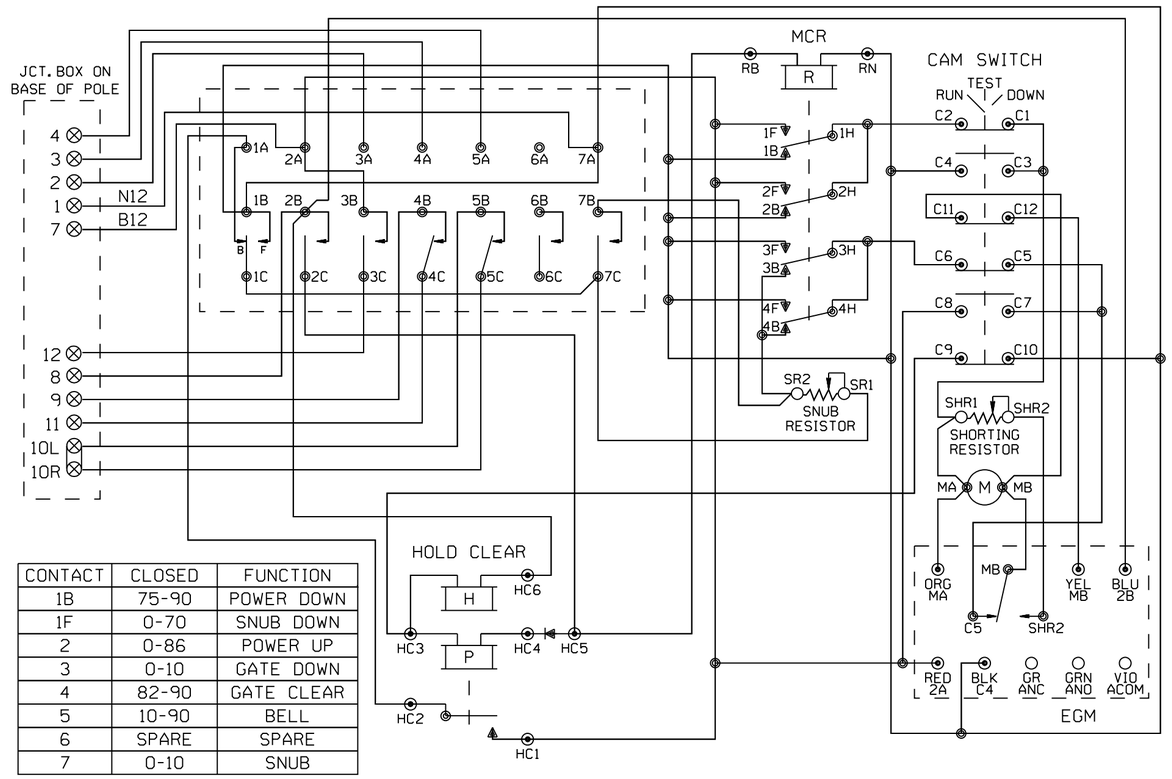

CONTACT	CLOSED	FUNCTION
1B	75-90	POWER DOWN
1F	0-70	SNUB DOWN
2	0-86	POWER UP
3	0-10	GATE DOWN
4	82-90	GATE CLEAR
5	10-90	BELL
6	SPARE	SPARE
7	0-10	SNUB

SAFETRAN PRODUCTS MODEL "S" MECHANISM

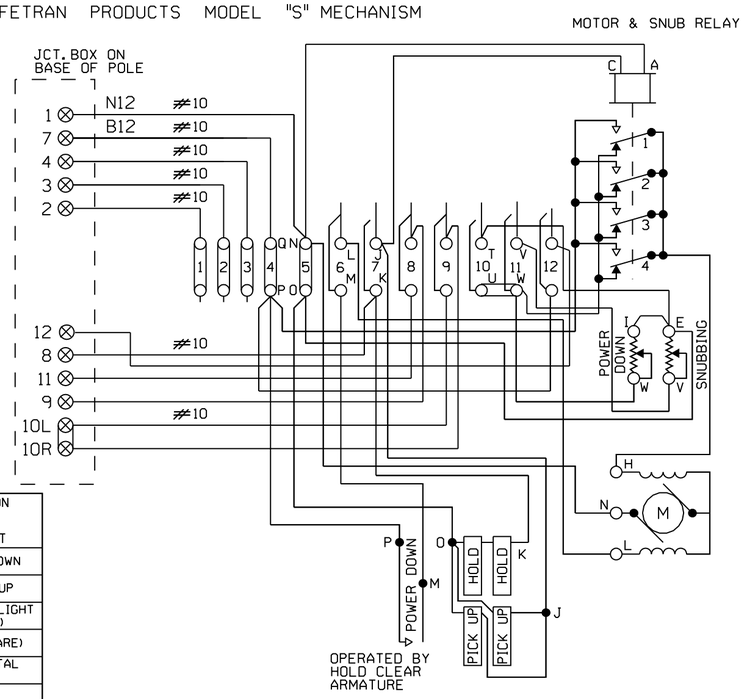

CONT. SPACE NO.	CLEARING (UP) CLOSES	CLEARING (UP) OPENS	RETURNING (DN.) CLOSES	RETURNING (DN.) OPENS	FUNCTION OF CONTACT
6	45°	—	—	45°	POWER DOWN
7	—	89°	89°	—	POWER UP
8	83°	—	—	83°	FLASHING LIGHT (SPARE)
9	5°	—	—	5°	BELL (SPARE)
10	—	5°	5°	—	HORIZONTAL SNUB
11	—	45°	45°	—	DOWN SNUB
12	—	5°	5°	—	GATE DOWN

SHOW TYPE MECH. INSTALLED

ALL MECHANISMS SHOWN IN THE CLEAR POSITION

JCT. BOX ON BASE POLE

L	R	L	R
1		7	
2		8	
3		9	
4		10	
5		11	
6		12	

WCH 3593-E

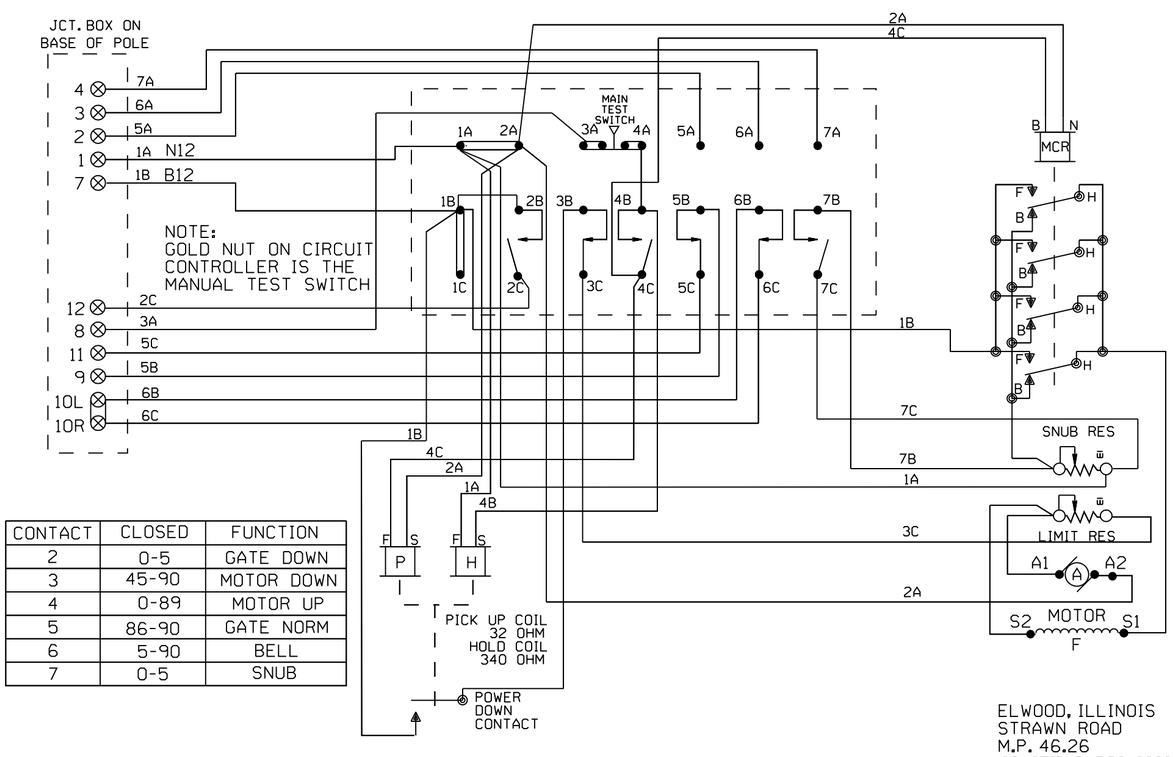

CONTACT	CLOSED	FUNCTION
2	0-5	GATE DOWN
3	45-90	MOTOR DOWN
4	0-89	MOTOR UP
5	86-90	GATE NORM
6	5-90	BELL
7	0-5	SNUB

ELWOOD, ILLINOIS
STRAWN ROAD
M.P. 46.26
JOLIET SUBDIVISION
D.O.T.#922 023D

REV. 1-13-06	INSTALL FLASHERS AND GATES WITH CWT
REC#13558 10-6-05	JTB RS/WITT/SSC/JNM

MODIFICATION LEVEL	
Q.A. LAST LEVEL CHK'D.	DD
LAST LEVEL MOD. THIS TYP.	DB
LAST LEVEL BY DESIGNER.	DF
CHANGED FROM TYP.? Y/N	N

CIRCUIT MODIFICATIONS ARE NOT TO BE MADE WITHOUT AUTHORITY FROM THE OFFICE OF SIGNAL DESIGN

DES: SSC
DIG: SSC
CHK: JTB
A.F.E. 08343
ID= CSL4626.6X

UNION PACIFIC RAILROAD
JOLIET, ILLINOIS TO
BLOOMINGTON, ILLINOIS
A.B.S. CIRCUITS

OFFICE OF CHIEF ENG'R — OMAHA NEBR.

DATE 09-20-02
SHEET 6
DWG 46.26
RTE-CSL

(REV. 01.02.21) (GWIRING.DGN)

24-46-63

CSL4626.6x.1 7/23/2014 12:39:32 PM

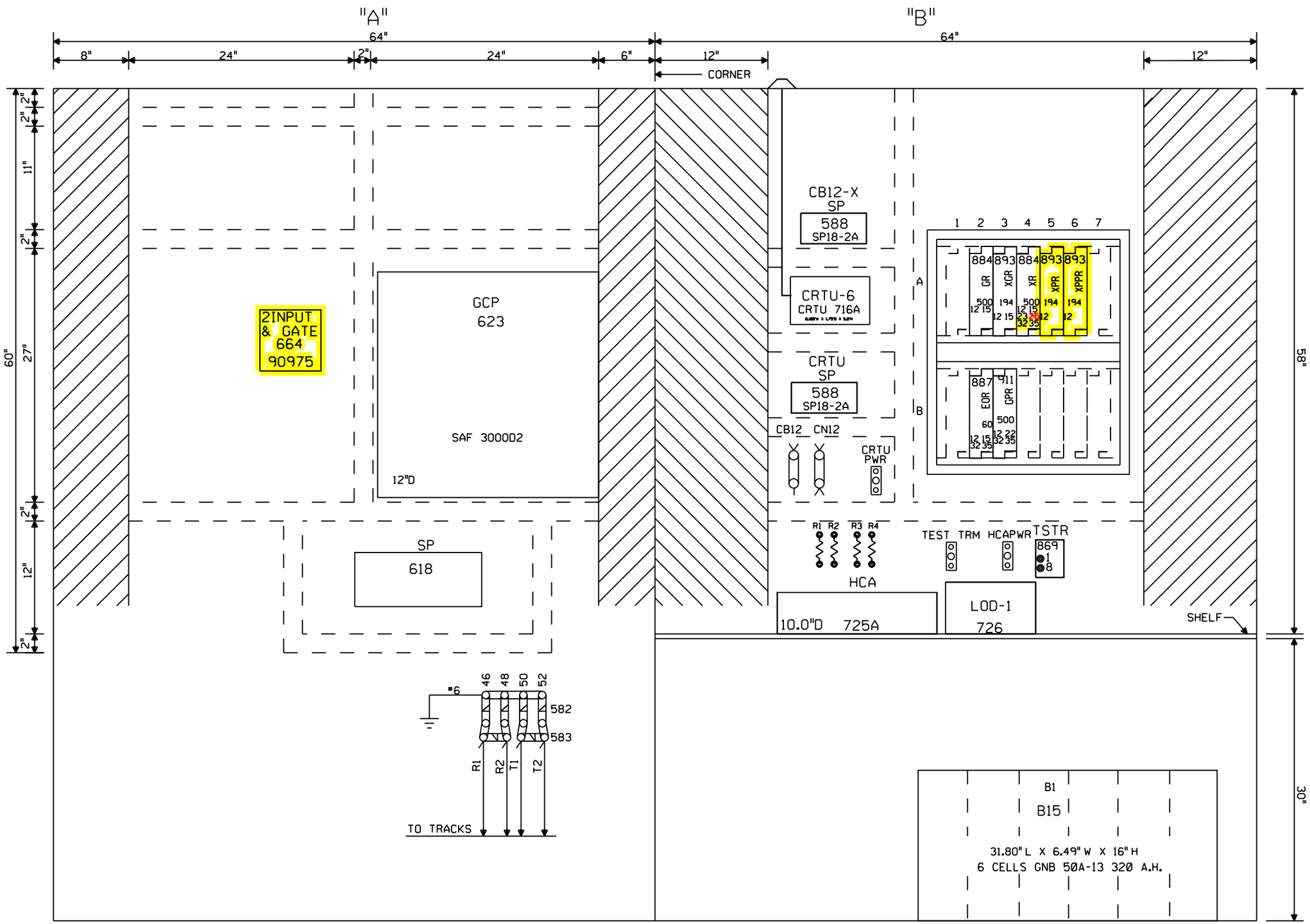

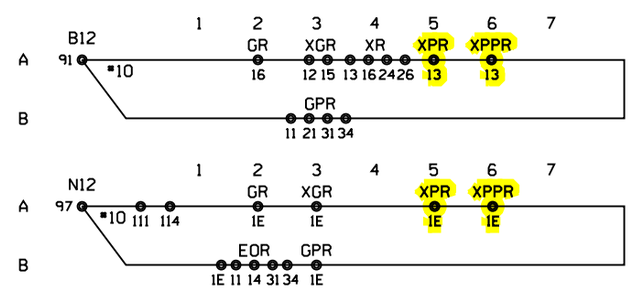

NOTE: ALL DIMENSIONS SHOWN ARE APPROXIMATE.

0 1 2 3 4 FEET

SCALE: 1.5 INCHES = 1 FOOT

= IN
= OUT

ELWOOD, ILLINOIS
STRAWN ROAD
M.P. 46.26
JOLIET SUBDIVISION
D.O.T.#922 023D

Designed: 6/26/14 INSTALL 6 SECONDS OF GATE DELAY TIME AT M.P. 46.26 STRAWN ROAD Rec#: IS: WO#: JPW/JTB	REV. 1-13-06 INSTALL FLASHERS AND GATES WITH CWT REC#13558 10-6-05 JTB RS/WITT/SSC/JNM	MODIFICATION LEVEL		CIRCUIT MODIFICATIONS ARE NOT TO BE MADE WITHOUT AUTHORITY FROM THE OFFICE OF SIGNAL DESIGN	DES: SSC DIG: SSC CHK: JTB A.F.E. 08343 ID=CSL4626.7X	UNION PACIFIC RAILROAD JOLIET, ILLINOIS TO BLOOMINGTON, ILLINOIS A.B.S. CIRCUITS OFFICE OF CHIEF ENG'R OMAHA NEBR.	DATE 09-20-02 SHEET 7 DWG 46.26 RTE-CSL
		Q.A. LAST LEVEL CHK'D.	DD				
		LAST LEVEL MOD. THIS TYP.	DB				
		LAST LEVEL BY DESIGNER.	DF				
		CHANGED FROM TYP.? Y/N	Y				

(REV. 01.02.21) (3K1TKBG.7)

CSL4626.7x.1 7/23/2014 12:39:35 PM

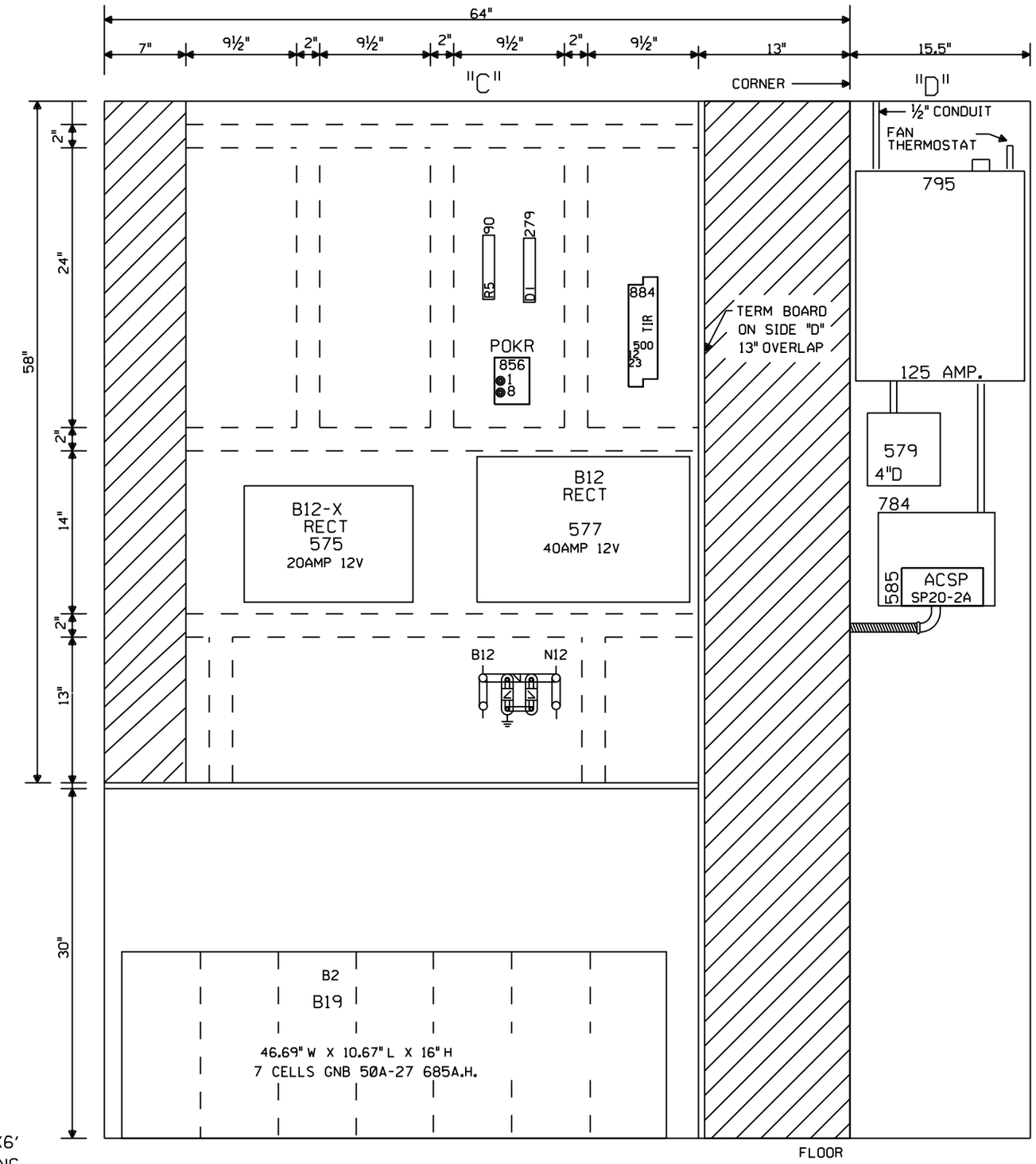

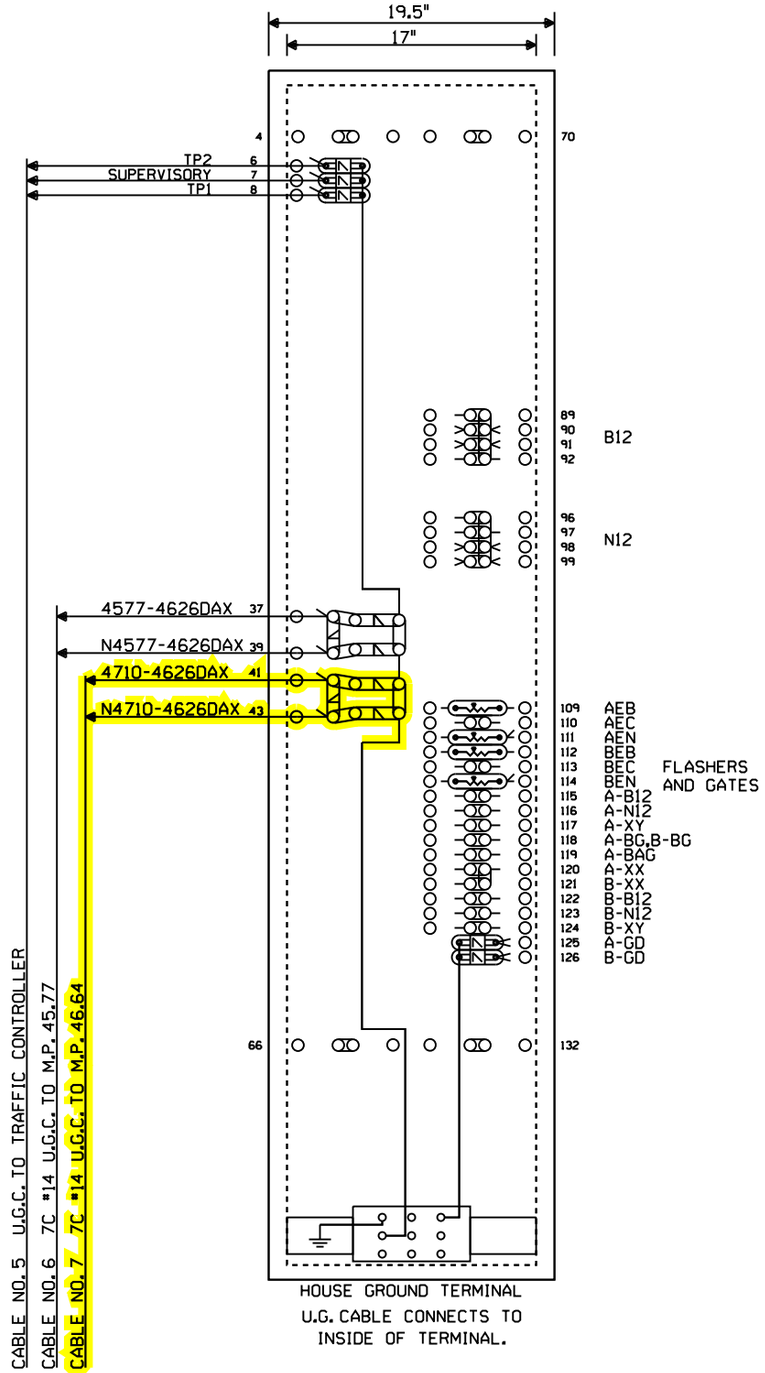

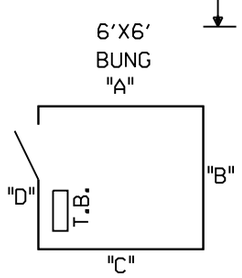

NOTE: ALL DIMENSIONS SHOWN ARE APPROXIMATE.

0 1 2 3 4 FEET

SCALE: 1.5 INCHES = 1 FOOT

ELWOOD, ILLINOIS
STRAWN ROAD
M.P. 46.26
JOLIET SUBDIVISION
D.O.T.#922 023D

REV. 1-13-06 INSTALL NEW GATES & CWT CIRCUITS IN A NEW BUNGALOW & RELOCATE WAYSIDE SIGNALS (457-458) @ MISSISSIPPI STREET. REC#13558 10-6-05 RLT/RDD RS/WITT/WITT/JNM	REV. 1-13-06 INSTALL FLASHERS AND GATES WITH CWT REC#13558 10-6-05 JTB RS/WITT/SSC/JNM	MODIFICATION LEVEL	
		Q.A. LAST LEVEL CHK'D.	DD
		LAST LEVEL MOD. THIS TYP.	DB
		LAST LEVEL BY DESIGNER.	DF
		CHANGED FROM TYP.? Y/N	Y

CIRCUIT MODIFICATIONS ARE NOT TO BE MADE WITHOUT AUTHORITY FROM THE OFFICE OF SIGNAL DESIGN

DES: SSC
DIG: SSC
CHK: JTB
A.F.E. 08343
ID=CSL4626.8X

UNION PACIFIC RAILROAD
JOLIET, ILLINOIS TO
BLOOMINGTON, ILLINOIS
A.B.S. CIRCUITS
OFFICE OF CHIEF ENG'R OMAHA NEBR.

DATE 09-20-02
SHEET 8
DWG 46.26
RTE-CSL

(REV. 01.02.21) (G.DGN)

CSL4626.8x.1 7/23/2014 12:39:39 PM