BOOK 1 OF 1

CSX TRANSPORTATION

Paris, IL

E. 1200N Rd. - Install FLS&G w/CWT. Other road names-(Work Camp Rd./TR 195C) Install crossing warning devices (FLS&G) and CWT detection equipment.

CXD1436126

PROJECT NO.
IL2014023

OP:
IL0418

xorail
5011 Gate Parkway, Bldg 100, Suite 400 - Jacksonville, FL 32256
904-443-0083

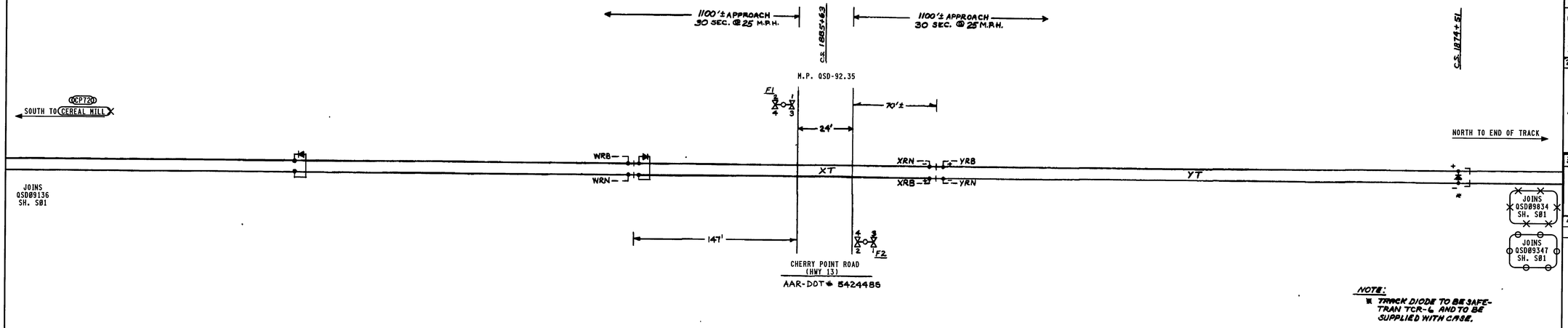

NOTE:
* TRACK DIODE TO BE SAFE-TRAN TCR-6 AND TO BE SUPPLIED WITH CASE.

REVISIONS

1 JANUARY 15, 1975
NEW PLAN DRAWN ACCT. AFLS INSTALLED AT PROPOSED XING.
SYSTEM FILE No.: 3026
W.O. No.: 48954
IN SERVICE: 4-14-92
PER: JED
SAB SAB

2 12-15-81 SCO
REVISED TO ADD APPROACH IND. CKT. FOR SIG. ACCT. NEW INTLG. INSTALLED AT PARIS.
FILE: 5N6
AFE: 457 & HX-467
IN SERVICE: 4-14-92
PER: JED
SAB SAB

3 1-6-93 DIVISION
SIGNAL 3506 REMOVED. TYPE C CIRCUIT ADDED SOUTH.
IN SERVICE: 4-14-92
PER: JED
SAB SAB

4 03-23-09 IN2009007
VECTOR CREATED BY XRL

= IN
= OUT

CXD1436126 IL2014023
06-02-14 XRL/S.BABU/RHA

xorail

CSX TRANSPORTATION
RAIL TRANSPORT GROUP ENGINEERING
COMMUNICATIONS AND SIGNALS

CHERRY POINT ROAD (HWY 13) (542448S)

TRACK AND SIGNAL PLAN
PARIS, IL M.P. QSD-92.35

DESIGNED	DIGITIZED	CHECKED	DATE
CSX	XRL	CSX	03-23-09

DRAWING	SHEET NO	NEXT SH	NEXT FILE	NEXT SH	FILE	SHEET
-----	-----	-----	QSD09235	E01	QSD09235	S01

RASTER FILE, QSD09235S01.CIT MS FILE: QSD09235.S01

INDEX

CONTENTS

SH. NO.		REVISION NO. 1	2	3	4	5	6	7	8	9
I01	INDEX AND REVISIONS	╱								
S01	TRACK AND SIGNAL PLAN	╱								
E01	POWER DISTRIBUTION	╱								
C01	CROSSING DETECTION CIRCUITRY	╱								
C02	DETECTION DEVICE PROGRAM	╱								
C03	CROSSING WARNING DEVICE GATE CIRCUITRY	╱								
C04	CROSSING WARNING DEVICE LIGHT CIRCUITRY	╱								
C05	SEAR II CIRCUITS	╱								
C06	SEAR II CONFIGURATION AND FUNCTIONS	╱								
C07	SEAR II CHANNELS	╱								
C08	WAYSIDE ACCESS GATEWAY	╱								

╱ = DESIGN COMPLETED

╳ = REVISION COMPLETED

REVISIONS

REV. NO.	PROJECT NO.	DESIGN DATE	IN SERVICE DATE	REVISION DATE
1	IL2014023	06-02-14		

TO BE COMPLETED ON A.I.S.

= NOTE

NEW WORK

CXD1436126 IL2014023

06-02-14 XRL/S.BABU/RHA

xorail

1TRKHXP3R.I01
REV. 03-29-13

CSX TRANSPORTATION

RAIL TRANSPORT GROUP ENGINEERING
COMMUNICATIONS AND SIGNALS

TR 195C (E.1200N RD.) 542447K

INDEX AND REVISIONS
PARIS, IL M.P. QSD-93.47

DESIGNED	DIGITIZED	CHECKED	DATE
XRL/KSB	XRL/KSB	XRL	06-02-14

DESIGN DATE	REV. NO.	DRAWING	SHEET NO	FILE	SHEET
06-02-14	1	-----	-----	QSD09347	I01

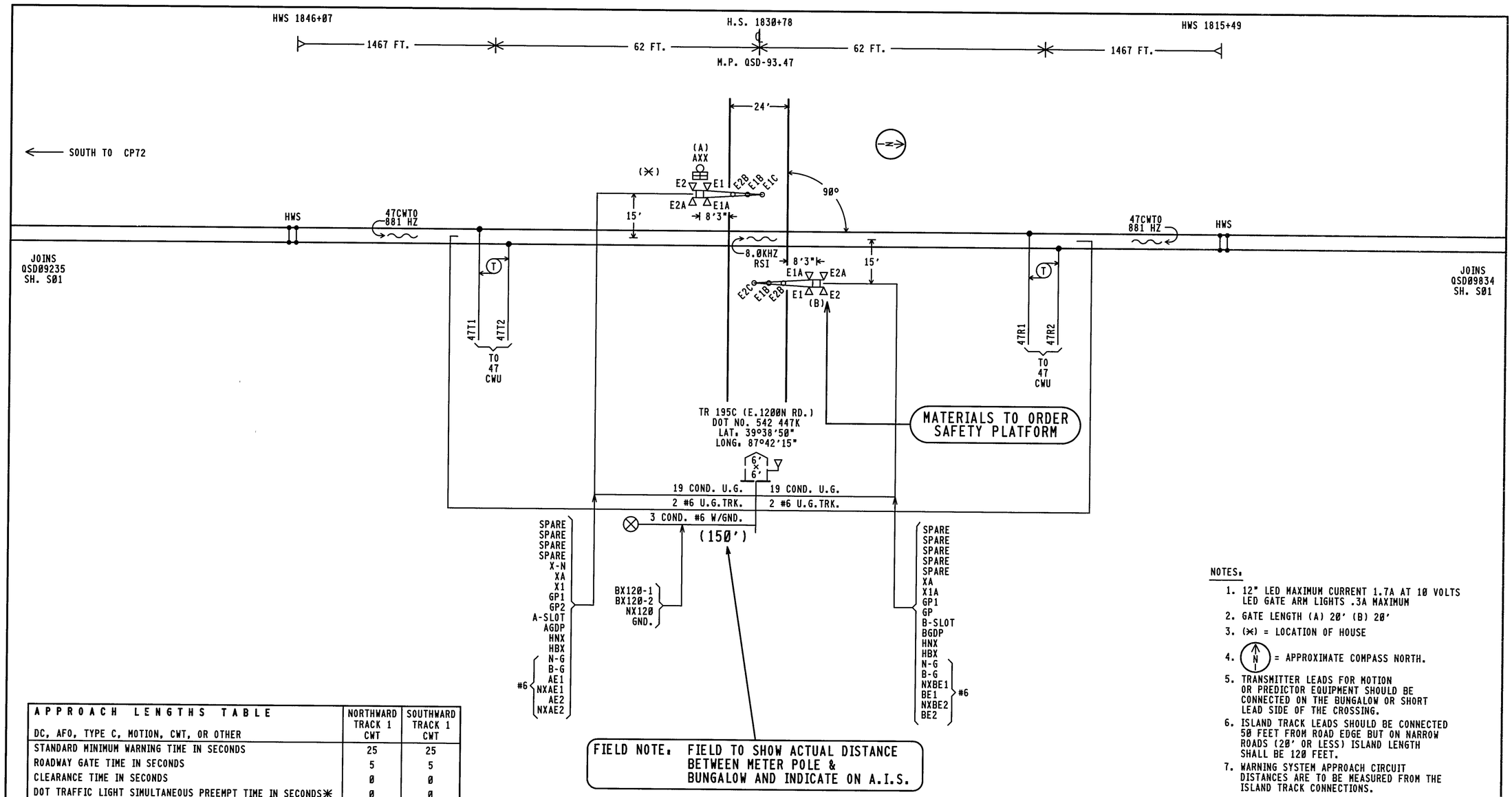

APPROACH LENGTHS TABLE DC, AFO, TYPE C, MOTION, CWT, OR OTHER	NORTHWARD TRACK 1 CWT	SOUTHWARD TRACK 1 CWT
STANDARD MINIMUM WARNING TIME IN SECONDS	25	25
ROADWAY GATE TIME IN SECONDS	5	5
CLEARANCE TIME IN SECONDS	0	0
DOT TRAFFIC LIGHT SIMULTANEOUS PREEMPT TIME IN SECONDS✳	0	0
DESIGNED WARNING TIME FOR TRAINS AT TIME TABLE SPEED	30 SEC.	30 SEC.
DOT TRAFFIC LIGHT ADVANCE PREEMPT TIME IN SECONDS ✳	0	0
CONTROL EQUIPMENT DECISION TIME IN SECONDS	4	4
DESIGNED DETECTION TIME FOR TRAINS AT TIME TABLE SPEED	34 SEC.	34 SEC.
TIME TABLE MAXIMUM TRAIN SPEED IN MILES PER HOUR	25	25
BUFFER SPEED IN MILES PER HOUR	5	5
TOTAL WARNING SYSTEM DESIGN SPEED IN MILES PER HOUR	30	30
APPROACH DISTANCE TO ISLAND EDGE IN FEET	1467	1467
HALF WIDTH OF ISLAND IN FEET	62	62
APPROXIMATE MILE POSTS FOR APPROACH CIRCUIT	93.18	93.76

✳AUTHORIZING AGENCY: NONE
✳DATE OF REQUIREMENT: NONE
✳AMOUNT OF TIME (SEC.): NONE

NOTES:

1. 12" LED MAXIMUM CURRENT 1.7A AT 10 VOLTS LED GATE ARM LIGHTS .3A MAXIMUM
2. GATE LENGTH (A) 20' (B) 20'
3. (✳) = LOCATION OF HOUSE
4. (N) = APPROXIMATE COMPASS NORTH.
5. TRANSMITTER LEADS FOR MOTION OR PREDICTOR EQUIPMENT SHOULD BE CONNECTED ON THE BUNGALOW OR SHORT LEAD SIDE OF THE CROSSING.
6. ISLAND TRACK LEADS SHOULD BE CONNECTED 50 FEET FROM ROAD EDGE BUT ON NARROW ROADS (20' OR LESS) ISLAND LENGTH SHALL BE 120 FEET.
7. WARNING SYSTEM APPROACH CIRCUIT DISTANCES ARE TO BE MEASURED FROM THE ISLAND TRACK CONNECTIONS.

= NOTE

NEW WORK
CXD1436126 IL2014023
06-02-14 XRL/S.BABU/RHA
xorail

1TRKHXP3R.S01
REV. 03-29-13

CSX TRANSPORTATION
RAIL TRANSPORT GROUP ENGINEERING
COMMUNICATIONS AND SIGNALS

TR 195C (E.1200N RD.) 542447K

TRACK AND SIGNAL PLAN
PARIS, IL M.P. QSD-93.47

DESIGNED	DIGITIZED	CHECKED	DATE
XRL/KSB	XRL/KSB	XRL	06-02-14

DESIGN DATE	REV. NO.	DRAWING	SHEET NO	FILE	SHEET
06-02-14	1	-----	-----	QSD09347	S01

TOP ROW

XR		XPR		GPR		EOR		POR		1ACR		2ACR	
12	FB	22	F	12	B	12	FB	12	FB	12	B	12	B
15	FB	25	F	15	B	15	FB	15	FB	15	B	15	B
22				22		32	FB	22	FB	22		22	
23				25		35	FB	25	FB	25		25	
25	F			32	F			32	F	32	B	32	B
32				35	B			35		35	B	35	B
35													
B8		B36		B82		B81		B62		B77		B77	
C30		C30		C30		C30		C30		C30		C30	

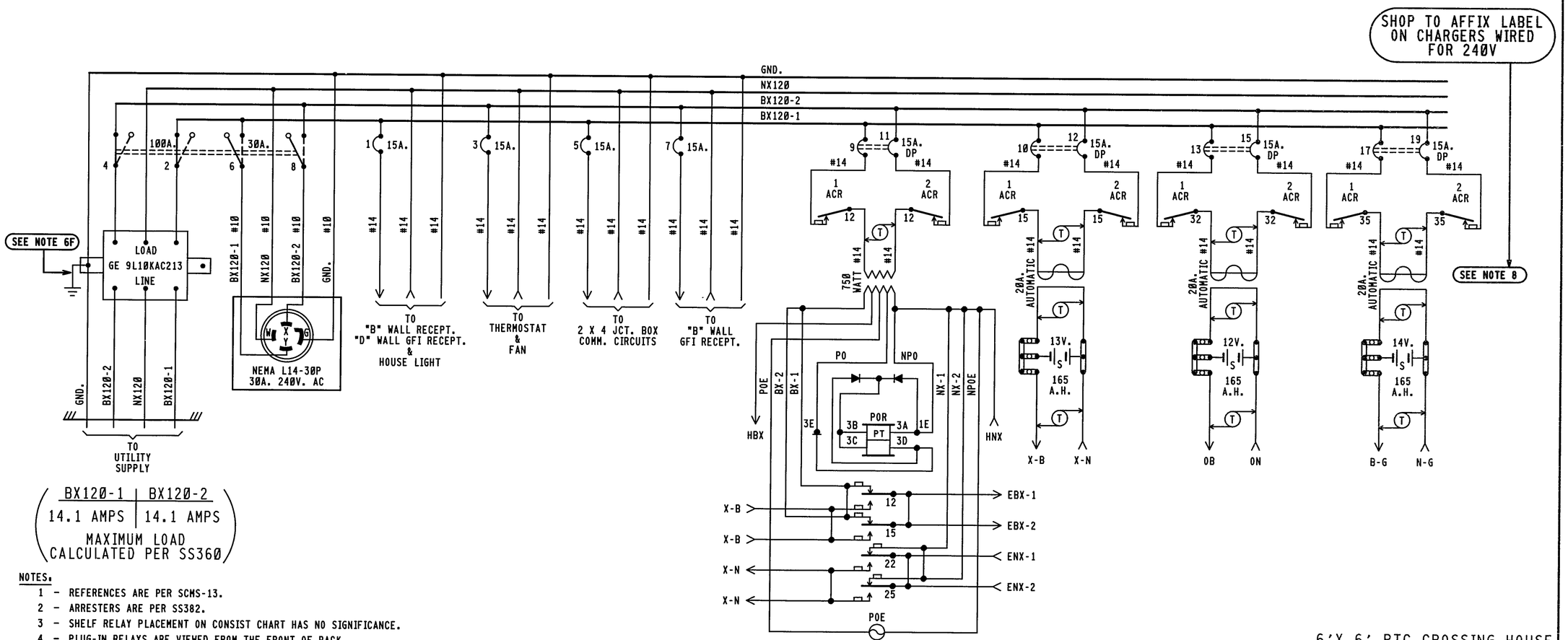

BX120-1	BX120-2
14.1 AMPS	14.1 AMPS

MAXIMUM LOAD CALCULATED PER SS360

NOTES.

1 - REFERENCES ARE PER SCMS-13.
2 - ARRESTERS ARE PER SS382.
3 - SHELF RELAY PLACEMENT ON CONSIST CHART HAS NO SIGNIFICANCE.
4 - PLUG-IN RELAYS ARE VIEWED FROM THE FRONT OF RACK.
5 - BATTERY A.H. CAPACITY SHOWN IS THE MINIMUM REQUIREMENT.
6 - WIRING
  A - FEED TO ALL BUSSES, LIGHT CIRCUITS,MOTOR CIRCUITS TO BE #10 FLEX.
  B - 120-VOLT FEED FROM ENTRANCE TO POWER BUSS TO BE #10 FLEX.
  C - ALL TRACK WIRES TO BE #10 FLEX.
  D - ALL OTHERS TO BE #16 FLEX UNLESS NOTED.
  E - ALL BATTERY OUTPUTS TO BE #6 PER SS360
  F - GROUND WIRE NOT NECESSARY WHEN GE ARRESTER IS MOUNTED ON GROUND PLANE OR METAL ENCLOSURE AFFIXED DIRECTLY TO BUNGALOW METALLIC STRUCTURAL MEMBER.
7 - CIRCUIT INTERRUPTERS 2 & 4 ARE MECHANICALLY INTERLOCKED WITH CIRCUIT INTERRUPTERS 6 & 8.
8 - CHARGERS TO BE WIRED FOR 240VAC
9 - CIRCUIT BREAKER PANEL-Q0116L125G (16 SPACES)

WILMORE DC-DC CONVERTER
MODEL 1675-12-12-15
INPUT + - → OB, ON
OUTPUT + - → B, N

= NOTE

NEW WORK
CXD1436126 IL2014023
06-02-14 XRL/S.BABU/RHA
xorail

1TRKHXP3R.E01
REV. 03-29-13

6'X 6' PTC CROSSING HOUSE

CSX TRANSPORTATION
RAIL TRANSPORT GROUP ENGINEERING
COMMUNICATIONS AND SIGNALS

TR 195C (E.1200N RD.) 542447K

POWER DISTRIBUTION
PARIS, IL M.P. QSD-93.47

DESIGNED	DIGITIZED	CHECKED	DATE
XRL/KSB	XRL/KSB	XRL	06-02-14

DESIGN DATE	REV. NO.	DRAWING	SHEET NO	FILE	SHEET
06-02-14	1	-----	-----	QSD09347	E01

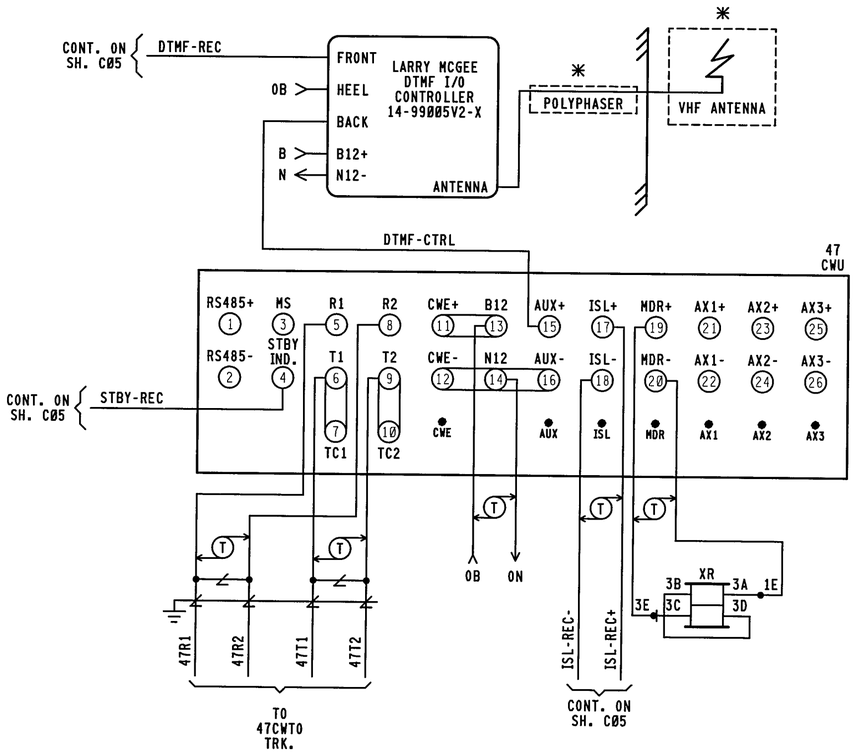

47 CWU HXP-3R MODULES REQUIRED

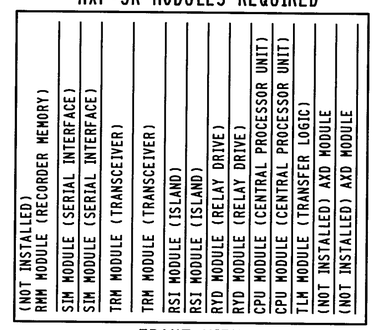

FRONT VIEW

RSI MODULE
226736-000 8.0KHZ

ISLAND FREQ.
8.0KHZ

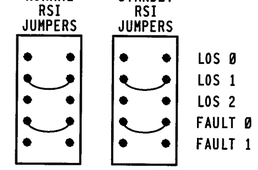

47
CWU

CABINET SWITCHES
THESE SWITCHES ARE LOCATED ON MOTHERBOARD
MASTER/SLAVE MASTER — SLAVE S1

SYSTEM CONFIGURATION				
S6 & S7 DIP SWITCH POSITIONS				
SWITCH	1	2	3	4
SWITCH POSITION	ON	OFF	OFF	OFF
APPROACH:	NORMAL		(NOT USED)	

	FREQUENCY SELECT					
NORMAL	S2 & S3 DIP SWITCH POSITIONS 881 HZ					
	SWITCH	1	2	3	4	5
	SWITCH POSITION	OFF	OFF	OFF	ON	ON
STANDBY	S4 & S5 DIP SWITCH POSITIONS 881 HZ					
	SWITCH	1	2	3	4	5
	SWITCH POSITION	OFF	OFF	OFF	ON	ON

TLM MODULE
JUMPERS AND SWITCHES

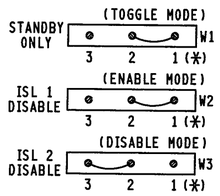

NOTE:
PIN 1 IS IDENTIFIED BY ASTERICK BELOW IT.
(☆) = MAY BE SET PER FIELD CONDITIONS.

MINUTE TIMEOUT SWITCH

SETTING	(☆) 9 MINUTES	S1

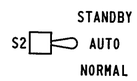

NOTES:

1. INTERCONNECTION CABLE MUST BE INSTALLED BETWEEN 80214 AND 80255 MODULES.

✳ = COMMUNICATIONS TO SUPPLY

PROGRAMMING FOR DTMF RADIO

REMOTE DTMF CROSSING ACTIVATION (ACTIVATES ENTIRE CROSSING)	
TO ACTIVATE PRESS:	447*
TO DE-ACTIVATE PRESS:	447#
(ACTIVATION WILL TIME OUT AFTER 60 SEC.)	

NEW WORK
CXD1436126 IL2014023
06-02-14 XRL/S.BABU/RHA
xorail

CSX TRANSPORTATION
RAIL TRANSPORT GROUP ENGINEERING
COMMUNICATIONS AND SIGNALS

TR 195C (E.1200N RD.) 542447K

CROSSING DETECTION CIRCUITRY
PARIS, IL M.P. QSD-93.47

1TRKHXP3R.C01
REV. 02-18-14

DESIGNED	DIGITIZED	CHECKED	DATE
XRL/KSB	XRL/KSB	XRL	06-02-14

DESIGN DATE	REV. NO.	DRAWING	SHEET NO	FILE	SHEET
06-02-14	1	-----	-----	QSD09347	C01

47CWU

HXP-3R APPLICATION DESIGN CARD

OPTION 90 (CABINET #)	CABINET #

PASSWORD(_ _✳_ _)(SEE MANUAL 100052-001 AA0 1-27	TRACK 1	TRACK 2	DEFAULT
APPROACH LENGTH ADJUSTMENT	1467'	N/A	9,999 FT.
WARNING TIME ADJUSTMENT	30 SEC.	N/A	99 SEC.
LUMPED IMPEDANCE ADJUSTMENT (LIA)	✳	N/A	0
TRANSMITTER CHECK ADJUSTMENT (TC)	✳	N/A	0
MOTION DETECT RESTART (MD RESTART)	0 ☆	N/A	99%
OPTION 1 TRACK ENABLE (TK-ENA)	UP	N/A	UP (ALWAYS ENABLED)
OPTION 2 TRACK FREQUENCY (TK FO)	STRAP ◇	N/A	0 HZ
OPTION 3 CONSTANT WARNING/MOTION (CW/MD)	C	N/A	d (Motion)
OPTION 4 UNI/BIDIRECTIONAL (UNI-BI)	b	N/A	b (bi)
OPTION 5 NARROW BAND COMPENSATION (NBS-C)	⊗	N/A	9,999 FT.
OPTION 6 CWE WARNING TIME (CWEWT)	80 SEC.	N/A	80 SEC.
OPTION 7 LOSS OF SHUNT TIME (LOS)	16 SEC.	N/A	16 SEC.
OPTION 8 LOS W/JOINTS NEAR ISLAND (IJ-LOS)	5 SEC. ✳✳	N/A	5 SEC.
OPTION 9 BALLAST COMPENSATION (BC)	✳	N/A	FREQUENCY DEPENDANT ◎
OPTION 10 PHASE COMPENSATION ADJUSTMENT (P-COMP)	~~✳✳✳~~	N/A	0°

	AX OPTIONS △	OPTION 11 AX DRIVE #1	OPTION 12 AX DRIVE #2	OPTION 13 AX DRIVE #3	DEFAULT
ITEM 1	TRACK ASSIGNMENT (TK-ASN)	N/A	N/A	N/A	1
ITEM 2	OFFSET DISTANCE TRACK 1 (OF-TK1)	0000'	0000'	0000'	0 FT.
ITEM 3	OFFSET DISTANCE TRACK 2 (OF-TK2)	N/A	N/A	N/A	N/A
ITEM 4	WARNING TIME (WT)	99 SEC.	99 SEC.	99 SEC.	99 SEC.
ITEM 5	MOTION DETECT RESTART (MD-RST)	99 %	99 %	99 %	99 %
ITEM 6	CONSTANT WARNING/MOTION (CW/MD)	d	d	d	d (Motion)
ITEM 7	CLEAR JOINTS LOS (CJ-LOS)	00 SEC.	00 SEC.	00 SEC.	0 SEC.
ITEM 8	POST JOINT DETECTION (PJ-DET)	15 SEC.	15 SEC.	15 SEC.	15 SEC.
ITEM 9	POST JOINT RX (PJ-RX)	15	15	15	15
ITEM 10	POSITIVE START	dn	dn	dn	dn

OPTION 17 MDR DRIVE OR AX RELAY DRIVE SELECTION (MDR-AX)	◎	N/A	dn (STATUS ONLY) ◎
OPTION 17 SUB-MENU	TRACK 1	TRACK 2	DEFAULT
ITEM 1 MDR-AX OFFSET DISTANCE TRK. 1(OF-TK1) & TRK. 2(OF-TK2)	0000'	N/A	0 FT.= CONFIGURED AS MDR
ITEM 2 MDR-AX CLEAR JOINT LOS TIME (CJ-LOS)	00 SEC.	N/A	0 SEC.
ITEM 3 MDR-AX POST JOINT DETECTION TIME (PJ-DET)	15 SEC.	N/A	15 SEC.
ITEM 4 POST JOINT RX (PJ-RX)	15	N/A	15 (0 = DISABLE)
OPTION 18 MOTION DETECTOR TIMER (MD-TMR)	10 MIN.	N/A	10 MIN. (0 = DISABLE)
OPTION 19 MINIMUM WARNING TIME WITH ADVANCED PREEMPTION (MIN-WT)	00 SEC.	N/A	00 SEC. (0 = DISABLE)
OPTION 20 FALSE SHUNT TIMER ADJUSTMENT (FS-TMR)			
ITEM 1 FALSE SHUNT RX (FS-RX)	0	N/A	0, 0 = DISABLE
ITEM 2 FALSE SHUNT TIMER ADJUSTMENT (FS-TM)	10	N/A	10
OPTION 21 POSITIVE START RX & TIMER ADJUSTMENT (POS-ST)			
ITEM 1 POSITIVE START RX (POS-RX)	0	N/A	0, 0 = DISABLE
ITEM 2 POSITIVE START TIMER (POS-TM)	10	N/A	10
OPTION 22 APPROACH RELEASE RX (AR-TM)			
ITEM 1 APPROACH RELEASE RX (AR-RX)	0	N/A	0, 0 = DISABLE
ITEM 2 APPROACH RELEASE TIMER (AR-TM)	10	N/A	10
OPTION 47 AUTO RX ADJUSTMENT (ATO-RX)	dn	N/A	dn = DISABLE
OPTION 48 PREDICTIVE FILTER ENABLE/DISABLE (PF-ENA)	dn	N/A	dn = DISABLE
OPTION 49 RESET LOCAL PARAMETERS TO DEFAULT SETTINGS (RESET)			PAGE 3-14 & 3-41
OPTION 50 RECORDER PRINTER CONTROL (PRNTR)	⊕		PAGE 1-47 & 3-41
OPTION 51 CLOCK ADJUSTMENT (CLOCK)	⊕		PAGE 3-32
OPTION 70 LOCAL SERIAL I/O PORT ADJUSTMENT (LSP)			
ITEM 1 BAUD RATE	38.4	⊕	PAGE 1-47 & 3-42
ITEM 2 DBITS (DATA BITS)	8	⊕	PAGE 1-47 & 3-42
ITEM 3 PA (PARITY)	NO(-=NO PARITY)	⊕	PAGE 1-47 & 3-42
OPTION 90 CABINET NUMBER DISPLAY (CAB)	✳		PAGE 1-47 & 3-41
OPTION 91 HXP-3 OPERATING PROGRAM VERSION NUMBER (VERS)	✳		VERSION 35.0
OPTION 99 RESET PASSWORD TIMER (TIMER)	⊕		PAGE 3-30

NOTE:

✳ = ENTRY TO BE DONE ON AS-IN-SERVICE.

☆ = NORMALLY SET AT "0" SEE MANUAL 100052-001 AA0 PG. 1-46 & 3-41.

◇ = THE WORD STRAP IS DISPLAYED WHEN FREQUENCY SELECT DIP SWITCHES USED TO SELECT A STANDARD FREQUENCY.

⊗ = ADJUSTMENT NECESSARY ONLY WHEN AX RELAY DRIVE MODULE USED.

✳✳ = ADJUSTMENT NECESSARY IF INSULATED JOINTS ARE LOCATED NEAR ISLAND CIRCUIT.

~~✳✳✳~~ = ADJUSTMENT NECESSARY ONLY IF VERY POOR BALLAST CONDITIONS NEED TO BE COMPENSATED.

◎ = OPTION 17 SUB-MENU USED ONLY WHEN AX RELAY DRIVE OPERATION IS SELECTED. ENTERING AN OFFSET DISTANCE VALUE OTHER THAN ZERO ASSIGNS A MDR AS AN AX DRIVE.

△ 1. WHEN AXD MODULES ARE NOT INSTALLED, THEIR ASSOCIATED OPTIONS AND ADJUSTMENTS ARE NOT DISPLAYED.
2. PROGRAM UNUSED AX OPTION(S) SAME AS OPTION 11. IF AX OPTION 12 OR 13 IS USED IN FUTURE THEN REPROGRAM AS APPLICABLE.

◎ = FREQUENCY DEPENDANT, RANGE BETWEEN 50-250 TO BE SUPPLIED ON AS-IN-SERVICE.

⊕ = OPTIONS 50-99 ARE NON-VITAL AND NOT REQUIRED FOR INITIAL SETUP. SEE MANUAL 100052-001 AA0. FOR OPTIONS 49 TO 99 SEE PAGES AS LISTED IN DEFAULT COLUMN.

⊕ = SET CORRECT LOCAL TIME AND DATE. TIME OF DAY SHOULD BE SYNCRONIZED WITH TIME SHOWN BY EXTERNAL EVENT RECORDER.

NEW WORK

CXD1436126 IL2014023
06-02-14 XRL/S.BABU/RHA

xorail

1TRKHXP3R.C02
REV. 03-29-13

CSX TRANSPORTATION
RAIL TRANSPORT GROUP ENGINEERING
COMMUNICATIONS AND SIGNALS

TR 195C (E.1200N RD.) 542447K

DETECTION DEVICE PROGRAM
PARIS, IL M.P. QSD-93.47

DESIGNED	DIGITIZED	CHECKED	DATE
XRL/KSB	XRL/KSB	XRL	06-02-14

DESIGN DATE	REV. NO.	DRAWING	SHEET NO	FILE	SHEET
06-02-14	1	-----	-----	QSD09347	C02

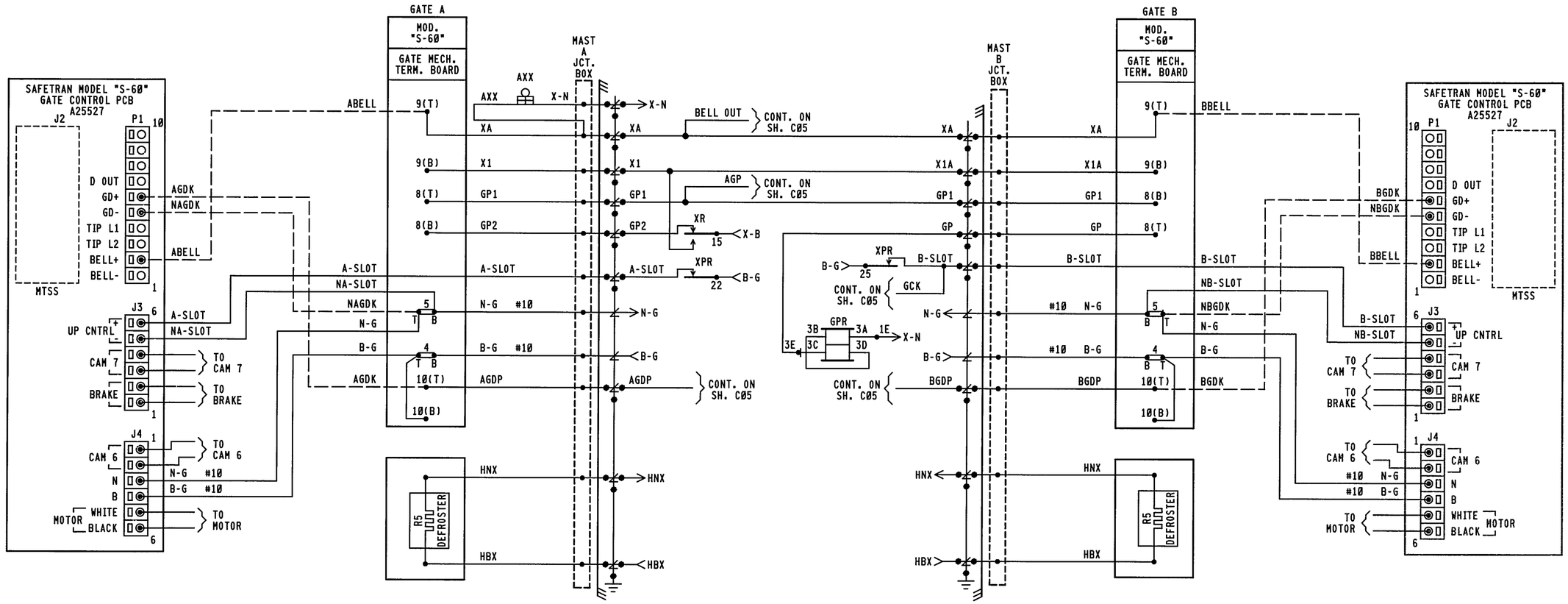

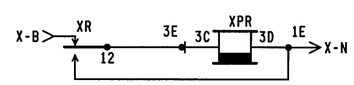

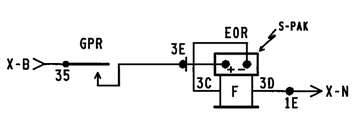

NOTES:

= TERMINAL IN JCT. BOX BASE

NEW WORK
CXD1436126 IL2014023
06-02-14 XRL/S.BABU/RHA
xorail

CSX TRANSPORTATION
RAIL TRANSPORT GROUP ENGINEERING
COMMUNICATIONS AND SIGNALS

TR 195C (E.1200N RD.) 542447K

CROSSING WARNING DEVICE GATE CIRCUITRY
PARIS, IL M.P. QSD-93.47

1TRKHXP3R.C03
REV. 03-29-13

DESIGNED	DIGITIZED	CHECKED	DATE
XRL/KSB	XRL/KSB	XRL	06-02-14

DESIGN DATE	REV. NO.	DRAWING	SHEET NO	FILE	SHEET
06-02-14	1	-----	-----	QSD09347	C03

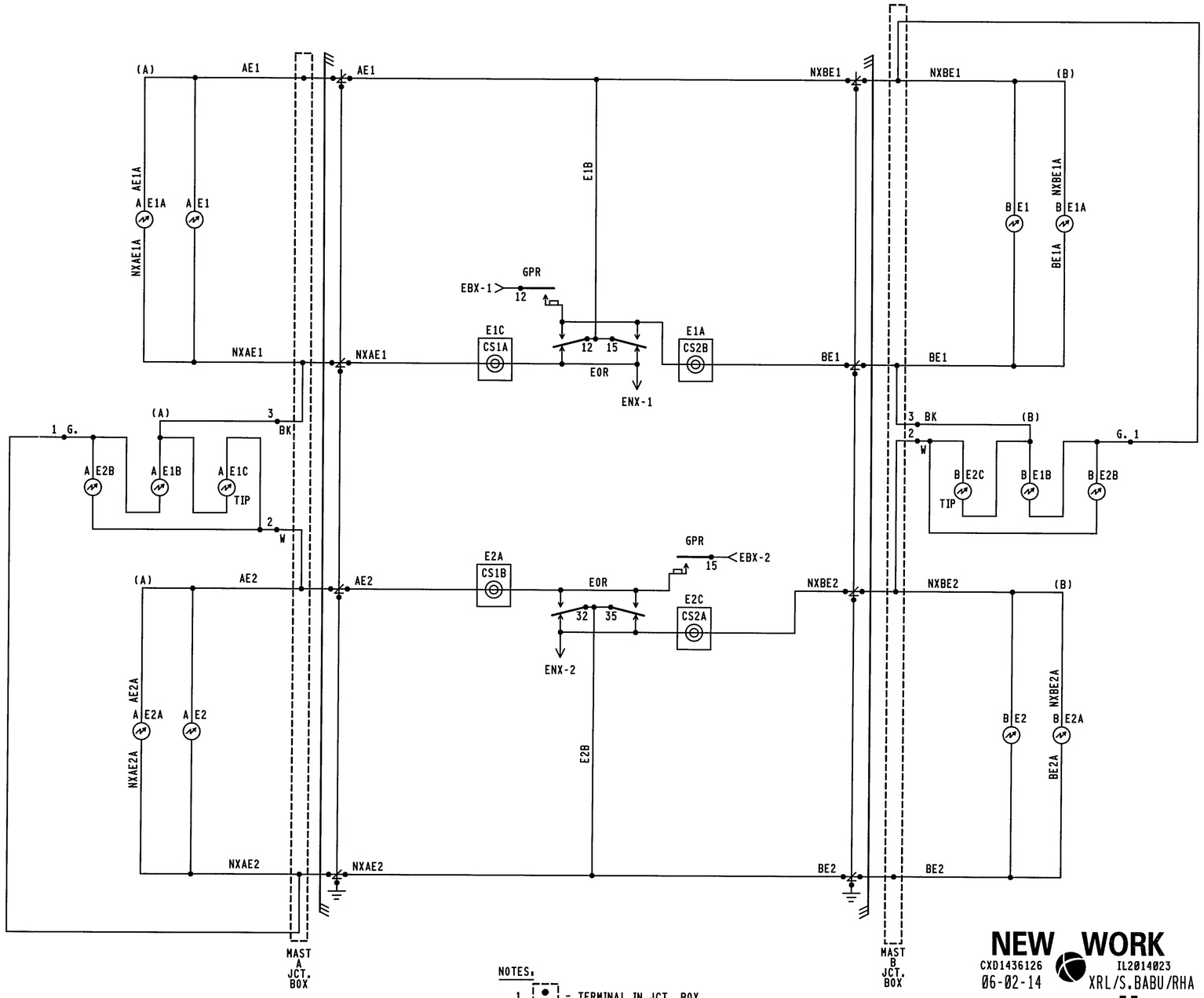

NOTES:

1. [•] = TERMINAL IN JCT. BOX
2. WHEN 7 OR MORE LIGHTS ON A SINGLE STRUCTURE REFER TO SS-382 FOR REQUIRED ARRESTER RATING.

NEW WORK
CXD1436126 IL2014023
06-02-14 XRL/S.BABU/RHA
xorail

1TRKHXP3R.C04
REV. 03-29-13

CSX TRANSPORTATION
RAIL TRANSPORT GROUP ENGINEERING
COMMUNICATIONS AND SIGNALS

TR 195C (E.1200N RD.) 542447K

CROSSING WARNING DEVICE LIGHT CIRCUITRY
PARIS, IL M.P. QSD-93.47

DESIGNED	DIGITIZED	CHECKED	DATE
XRL/KSB	XRL/KSB	XRL	06-02-14

DESIGN DATE	REV. NO.	DRAWING	SHEET NO	FILE	SHEET
06-02-14	1	-----	-----	QSD09347	C04

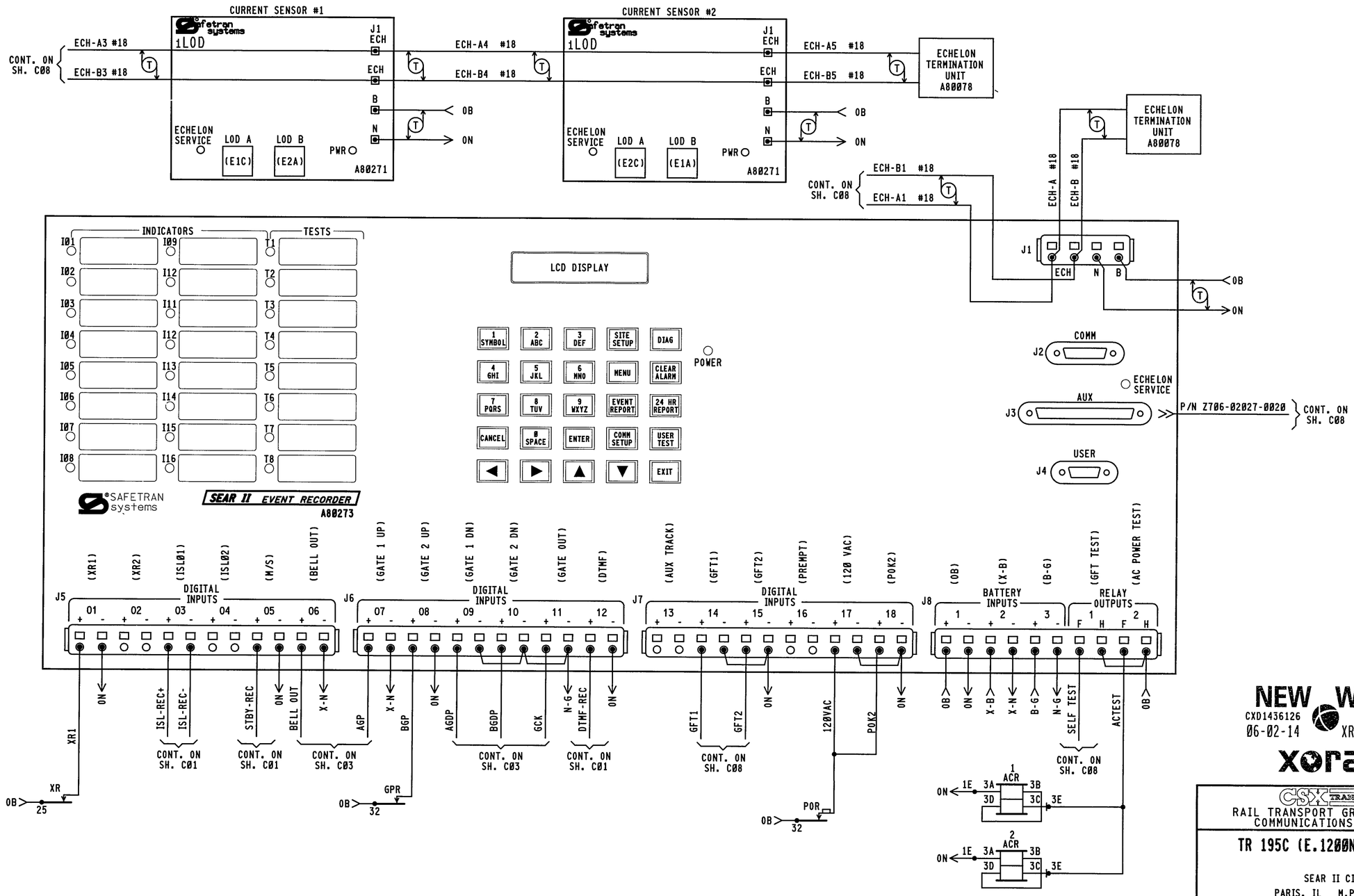

NEW WORK
CXD1436126 IL2014023
06-02-14 XRL/S.BABU/RHA
xorail

CSX TRANSPORTATION
RAIL TRANSPORT GROUP ENGINEERING
COMMUNICATIONS AND SIGNALS

TR 195C (E.1200N RD.) 542447K

SEAR II CIRCUITS
PARIS, IL M.P. QSD-93.47

1TRKHXP3R.C05
REV. 03-29-13

DESIGNED	DIGITIZED	CHECKED	DATE
XRL/KSB	XRL/KSB	XRL	06-02-14

DESIGN DATE	REV. NO.	DRAWING	SHEET NO	FILE	SHEET
06-02-14	1	-----	-----	QSD09347	C05

	DEFAULTS AND/OR STYLE	FIELD RECORD
SEAR II EXECUTIVE PROGRAM	VERSION. _____	VERSION.
APPLICATION PROGRAM (IF LOADED)	VERSION. _____	VERSION.

SITE SET UP OPTIONS		
OPTION	SELECTION	
DATE	XX-XX-XXXX	
TIME	[XX:XX:XX]	
DAYLIGHT SAVINGS TIME	YES ■ NO □	
TIME ZONE	■ EST □ CST	
SITE NAME	TR 195C (E.1200N RD.)	
MILEPOST	QSD-93.47	
DOT NUMBER	542447K	
TESTER TYPE	■ CROSSING □ WAYSIDE	
DATE FORMAT	■ MM-DD-YYYY □ DD-MM-YYYY	
TEMP FORMAT	■ FAHRENHEIT □ CELSIUS	
INDICATE HOLDOFF	0	
INDICATE REFRESH	60	
SITE TYPE	□ NO COMMUNICATION □ DIAL-UP ■ COLLECTOR □ NODE □ BULLHORN/MODE □ CDS902X	
SITE ATCS ADDRESS	7.125.462.027.99.01 (7.RRR.LLL.GGG.99.01)	NOTE 5
OFFICE ADDRESS	2.125.00.0000 (2.RRR.NN.DDDD)	
OFFICE SITE ADDRESS	NA	
BACK UP SITE ADDRESS 1	NA	
BACK UP SITE ADDRESS 2	NA	
POLL ID (1-99)	1	
GEN/ATCS MODE	□ GENISYS ■ GEN/ATCS	
XID DISABLED	■ YES □ NO	
OFFICE COM. DEVICE	□ DIRECT □ MCM (RS232) □ MCM (ECH) ■ WAG (ECHELON) □ DIAL UP (RS232) □ S200 RADIO (RS422)	NOTE 6
RADIO ATCS ADDRESS	7.125.462.027.99.01	
OFFICE PHONE NUMBER	1-XXX-XXX-XXXX	
INIT. STRING		
FIELD COMM	□ VHF (ECH) □ VHF (RS232) □ WAG (ECH) □ SS (RS232) ■ NONE	
USER PORT	BAUD RATE (9600)	
AUX PORT	BAUD RATE (9600)	NOTE 7
COMM PORT	BAUD RATE (9600)	

NOTES.

1. LARGE CONFIGURATION ASSIGNS RECORDER INPUTS FOR USE WHEN DIGITAL I/O MODULE REQUIRED.
2. IF WARNING DEVICE = NONE MAIN/STANDBY OPTION NOT SHOWN.
3. IF VHF COMMUNICATIONS = NO THEN DTMF ACTIVATION AND CHANNEL OPTIONS ARE NOT SHOWN.
4. LAST 3 DIGITS OF DOT NO. FOR FIRST ACTIVATION CODE.
5. DEFAULT ADDRESS 7.620.100.100.99.01 USED FOR STAND ALONE LOCATIONS.
6. OPTIONS NOT SHOWN IF SITE TYPE = NO COMMUNICATIONS.
7. FORMAT AS. BAUD, DATA BITS, PARITY STOP BITS, FLOW CONTROL.

SITE SET UP OPTIONS CONT.		
	OPTION	SELECTION
	RAILROAD NUMBER	125
NOTE 1	CROSSING CONFIGURATION	STANDARD ■ LARGE □ REMOTE □ SPLIT GATE □ ISL ONLY □ CP COLLECTOR □
	NUMBER OF XR INPUTS	0 □ 1 ■ 2 □ 3 □ 4 □
	NUMBER OF ISL INPUTS	0 □ 1 ■ 2 □ 3 □ 4 □
	CONSTANT WARNING DEVICE	GCP □ OTHER ■ NONE □
	TOTAL NUMBER OF GCP NODES	1 □ 2 □ 3 □ 4 □ 5 □
	NUMBER OF REDUNDANT GCP	1 □ 2 □ 3 □ 4 □
	CROSSING CONTROLLER 1	SSCC IIIA / PLUS □ SSCC IV □ OTHER □ NONE ■
	POK2	YES ■ NO □
NOTE 2	MAIN / STANDBY	YES ■ NO □
	AUXILIARY TRACKS	0 ■ 1 □ 2 □
	ENTRANCE GATE	0 □ 1 □ 2 ■ 3 □ 4 □ 5 □ 6 □ 7 □ 8 □
	EXIT GATES	0 ■ 1 □ 2 □ 3 □ 4 □
	GATE POSITION FAIL 10-60 SEC	25
	NUMBER OF UAX INPUTS	0 ■ 1 □ 2 □
	BATTERY BANKS	1 □ 2 □ 3 ■ 4 □ 5 □ 6 □
	OB RESOLUTION	.2 ■ .5 □ 1.0 □
	X-B RESOLUTION	.2 ■ .5 □ 1.0 □ NOT PRESENT □
	B-G RESOLUTION	.2 □ .5 □ 1.0 ■ NOT PRESENT □
	X-B2 RESOLUTION	.2 □ .5 □ 1.0 □ NOT PRESENT ■
	B-G2 RESOLUTION	.2 □ .5 □ 1.0 □ NOT PRESENT ■
	X-B3 RESOLUTION	.2 □ .5 □ 1.0 □ NOT PRESENT ■
	PREEMPTION	NORMAL □ ADVANCED □ NO ■
	KDR INPUT	YES ■ NO □
NOTE 3	VHF COMMUNICATOR	YES □ NO ■
NOTE 4	ACTIVATION CODE 1	XXX
	ACTIVATION CODE 2	XXX
	ACTIVATION CODE 3	XXX
	ACTIVATION TIMEOUT (30 TO 600 SECONDS)	60
	1LOD MODULES	0 □ 1 □ 2 ■ 3 □ 4 □ 5 □ 6 □
	ANY LED BULBS	NO □ YES ■
	AUTO INSPECTIONS	YES ■ NO □
	BELL ON	GATES LOWERING ■ GATES MOVING □ ALWAYS □
	GROUND FAULT DETECTORS	YES ■ NO □
	BATTERIES ON GFT1	1 □ 2 ■
	FULL APPROACH MOVE ALARMS	ACTIVATED ■ DO NOT ACTIVATE □

LIT BULB COUNT ON EACH CIRCUIT	NO.	TYPE OF BULB	CURRENT READING IN AMP. AT APPROX. 10.0 V BULB VOLTAGE
CURRENT SENSOR (1) E1C. LAMP SET UP	4	□BULBS ■LED	4.0
CURRENT SENSOR (1) E2A. LAMP SET UP	4	□BULBS ■LED	4.0
CURRENT SENSOR (2) E2C. LAMP SET UP	4	□BULBS ■LED	4.0
CURRENT SENSOR (2) E1A. LAMP SET UP	4	□BULBS ■LED	4.0

MEASURE BATTERY VOLTAGE AT INPUT		
BATTERY VOLTAGE	OB	12 VOLTS
BATTERY VOLTAGE	X-B	13 VOLTS
BATTERY VOLTAGE	B-G	14 VOLTS

NEW WORK
CXD1436126 IL2014023
06-02-14 XRL/S.BABU/RHA
xorail

1TRKHXP3R.C06
REV. 03-29-13

CSX TRANSPORTATION
RAIL TRANSPORT GROUP ENGINEERING
COMMUNICATIONS AND SIGNALS

TR 195C (E.1200N RD.) 542447K

SEAR II CONFIGURATION AND FUNCTIONS
PARIS, IL M.P. QSD-93.47

DESIGNED	DIGITIZED	CHECKED	DATE
XRL/KSB	XRL/KSB	XRL	06-02-14

DESIGN DATE	REV. NO.	DRAWING	SHEET NO	FILE	SHEET
06-02-14	1	-----	-----	QSD09347	C06

DISCRETE INPUTS	DI 01	DI 02	DI 03	DI 04	DI 05	DI 06
CHANNEL	1	2	3	4	5	6
NAME	XR1		ISLAND 1 (TRACK)		STANDBY	BELL OUT (BELL PWR)
TAG	XR1 (XR)	SP	ISL1	SP	M/S	BELL OUT (BELL PWR)
OFF NAME	DOWN (XR)		DOWN (ISL1)		DOWN (STANDBY)	OFF (BELL PWR)
ON NAME	UP (XR)		UP (ISL1)		UP (MAIN)	ON (BELL PWR)
ON DEBOUNCE TIME	100 ms	1000 ms	100 ms	1000 ms	100 ms	100 ms
OFF DEBOUNCE TIME	100 ms	1000 ms	100 ms	1000 ms	100 ms	100 ms
TOGGLE PERIOD	1000 ms	1000 ms	1000 ms	1000 ms	1000 ms	1000 ms

TSS INPUTS	DI 07	DI 08	DI 09	DI 10
CHANNEL	7	8	9	10
NAME	AGP	BGP	AGDP	BGDP
TAG	AGP (GP)	BGP (GP)	AGDP	BGDP
OFF NAME	LIGHTS FLASH	LIGHTS FLASH	NOT HORIZ	NOT HORIZ
ON NAME	GATE VERTICAL	GATE VERTICAL	GATE HORIZ	GATE HORIZ
ON DEBOUNCE TIME	100 ms	100 ms	100 ms	100 ms
OFF DEBOUNCE TIME	100 ms	100 ms	100 ms	100 ms
TOGGLE PERIOD	1000 ms	1000 ms	1000 ms	1000 ms

DISCRETE INPUTS	DI 11	DI 12	DI 13
CHANNEL	11	12	13
NAME	GATE CONTROL	DTMF	
TAG	GCOUT1 (GCK)	DTMF-REC	SP
OFF NAME	OFF (DESCENT)	OFF (NO GATE KEYED)	
ON NAME	ON (ASCENT ON)	ON (ACTIVATE)	
ON DEBOUNCE TIME	100 ms	100 ms	1000 ms
OFF DEBOUNCE TIME	100 ms	100 ms	1000 ms
TOGGLE PERIOD	1000 ms	1000 ms	1000 ms

GFT INPUTS	DI 14	DI 15
CHANNEL	14	15
NAME	GND FAULT TESTER 1 (GFT1,2)	GND FAULT TESTER 2 (GFT3,4)
TAG	GFT1 (GFT1 DATA)	GFT2 (GFT2 DATA)
BATTERY 1 NAME	OB (GND FAULT)	B-G (GND FAULT)
BATTERY 1 TAG	OB (GND FAULT)	B-G (GND FAULT)
BATTERY 2 NAME	X-B (GND FAULT)	SP
BATTERY 2 TAG	X-B (GND FAULT)	SP

DISCRETE INPUTS	DI 16	DI 17	DI 18
CHANNEL	16	17	18
NAME		120 VAC	POK2
TAG	SP	120 VAC	POK2
OFF NAME		OFF (ALL POWER OFF)	OFF (ALL POWER OFF)
ON NAME		ON (ALL POWER ON)	ON (ALL POWER ON)
ON DEBOUNCE TIME	1000 ms	100 ms	100 ms
OFF DEBOUNCE TIME	1000 ms	100 ms	100 ms
TOGGLE PERIOD	1000 ms	1000 ms	1000 ms

BATTERY INPUTS	BI1	BI2	BI3
CHANNEL	1	2	3
NAME	OB (ELECTRONIC BATT)	X-B (BULB BATT)	B-G (GATE BATT)
TAG	OB	X-B	B-G
SAMPLE PERIOD (ms)	500 (ms)	500 (ms)	500 (ms)
RESOLUTION (V)	0.2 (VOLTS)	0.2 (VOLTS)	1.0 (VOLTS)
AVGERAGING SAMPLES	32 SAMPLES	32 SAMPLES	32 SAMPLES

RELAYS	RO1	RO2
CHANNEL	1	2
NAME	GFT TEST	AC POWER TEST (ACRLY)
TAG	SELF TEST	AC POWER TEST (ACRLY)
OFF STATE NAME	NOT TESTING	OFF (ACR DN)
ON STATE NAME	TESTING	ON (ACR UP)
UNKNOWN STATE NAME	PULSE	PULSE
ON PULSE TIME (s)	1 (s)	1 (s)
OFF PULSE TIME (s)	1 (s)	1 (s)
TOGGLE PERIOD (s)	1 (s)	1 (s)
DUTY CYCLE	50	50

NOTE: ( ) DENOTES NOMENCLATURE FOR CLARIFICATION AND WILL NOT DISPLAY ON LOG REPORTS.

NEW WORK
CXD1436126 IL2014023
06-02-14 XRL/S.BABU/RHA
xorail

1TRKHXP3R.C07
REV. 03-29-13

CSX TRANSPORTATION
RAIL TRANSPORT GROUP ENGINEERING
COMMUNICATIONS AND SIGNALS

TR 195C (E.1200N RD.) 542447K

SEAR II CHANNELS
PARIS, IL M.P. QSD-93.47

DESIGNED	DIGITIZED	CHECKED	DATE
XRL/KSB	XRL/KSB	XRL	06-02-14

DESIGN DATE	REV. NO.	DRAWING	SHEET NO	FILE	SHEET
06-02-14	1	-----	-----	QSD09347	C07

WAYSIDE ACCESS GATEWAY CONFIGURATION	
SITE ATCS ADDRESS	7.125.462.027.01.01 7.125.LLL.GGG.SS.DD
SERIAL INTERFACE	9600,NONE,8,1/NOFLOW
SERIAL FORMAT	RAW
WAG TEST MODE	DISABLED
ECHELON ADDRESS	01.01
UDP PORTS	5000, 5001, 5002, 5003
ROUTE TABLE EXPIRY	5400 SEC
BROADCAST MEDIUM	IP ETHERNET
TCP PORTS	6001
DHCP SERVER	DISABLED
IP ADDRESS	192.168.13.1
TYPE 7 ROUTE LENGTH	12--7RRRLLLGGGSS
IP NETWORK MASK	255.255.255.000

NOTE TO INSPECTOR,
AT INSTALLATION OF CDMA BY COM.
MARK-UP CONFIGURATION TABLE FOR
AS IN SERVICE PLANS

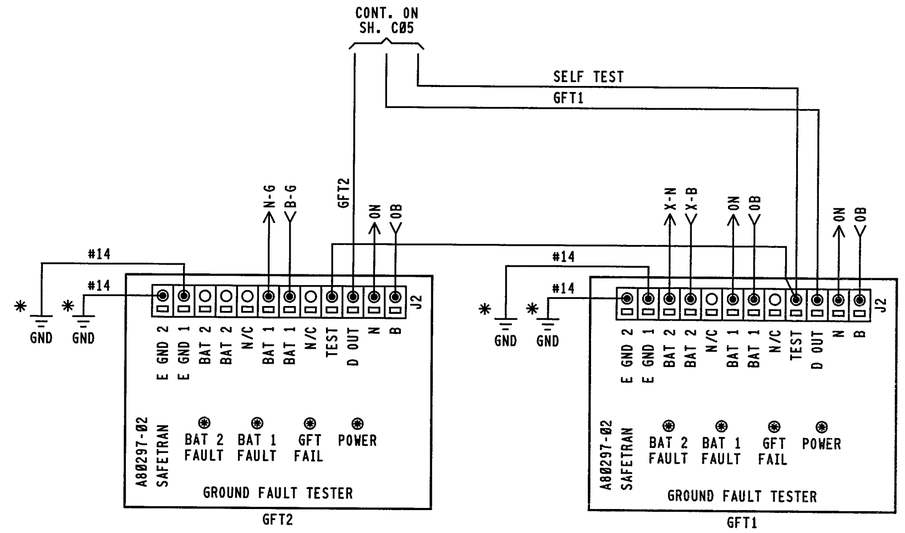

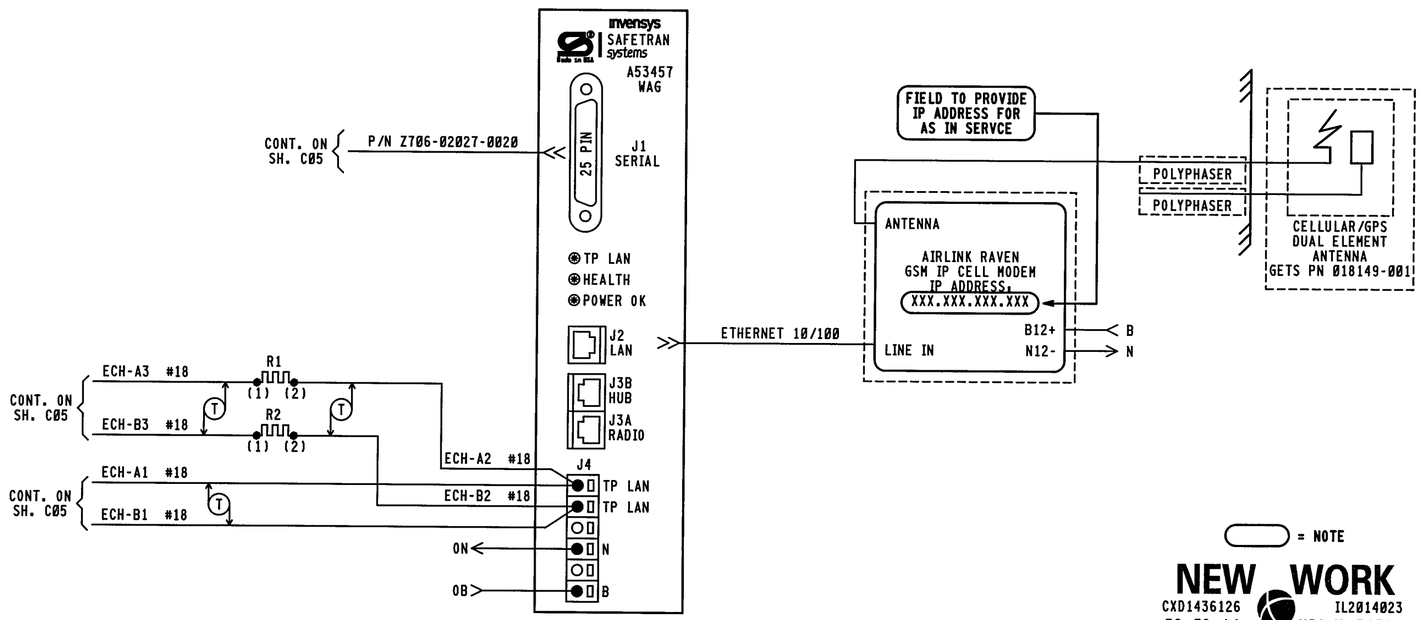

COMM NOTES,

1. WAG J3A PINOUTS,
   4 & 5 = +12VDC RADIO OUT
   7 & 8 = GND RADIO RETURN
2. WAG AND SEARII ECHELON COMM THROUGH GCP3000 LONTALK PROTOCOL CONNECTION

NOTE,

1. ALL WIRING #16 UNLESS NOTED OTHERWISE.
2. ✱ = EARTH GROUND REF. TERMINALS REQUIRED FOR DETECTION. DO NOT JUMPER TERMINALS. MUST BE CONNECTED TO DIFFERENT POINTS OF BUNGALOW.
3. R1 & R2 ARE .5 WATT, 20 OHM RESISTORS.

= NOTE

NEW WORK
CXD1436126 IL2014023
06-02-14 XRL/S.BABU/RHA
xorail

CSX TRANSPORTATION
RAIL TRANSPORT GROUP ENGINEERING
COMMUNICATIONS AND SIGNALS

TR 195C (E.1200N RD.) 542447K

WAYSIDE ACCESS GATEWAY
PARIS, IL M.P. QSD-93.47

1TRKHXP3R.C08
REV. 03-29-13

DESIGNED	DIGITIZED	CHECKED	DATE
XRL/KSB	XRL/KSB	XRL	06-02-14

DESIGN DATE	REV. NO.	DRAWING	SHEET NO	FILE	SHEET
06-02-14	1	-----	-----	QSD09347	C08

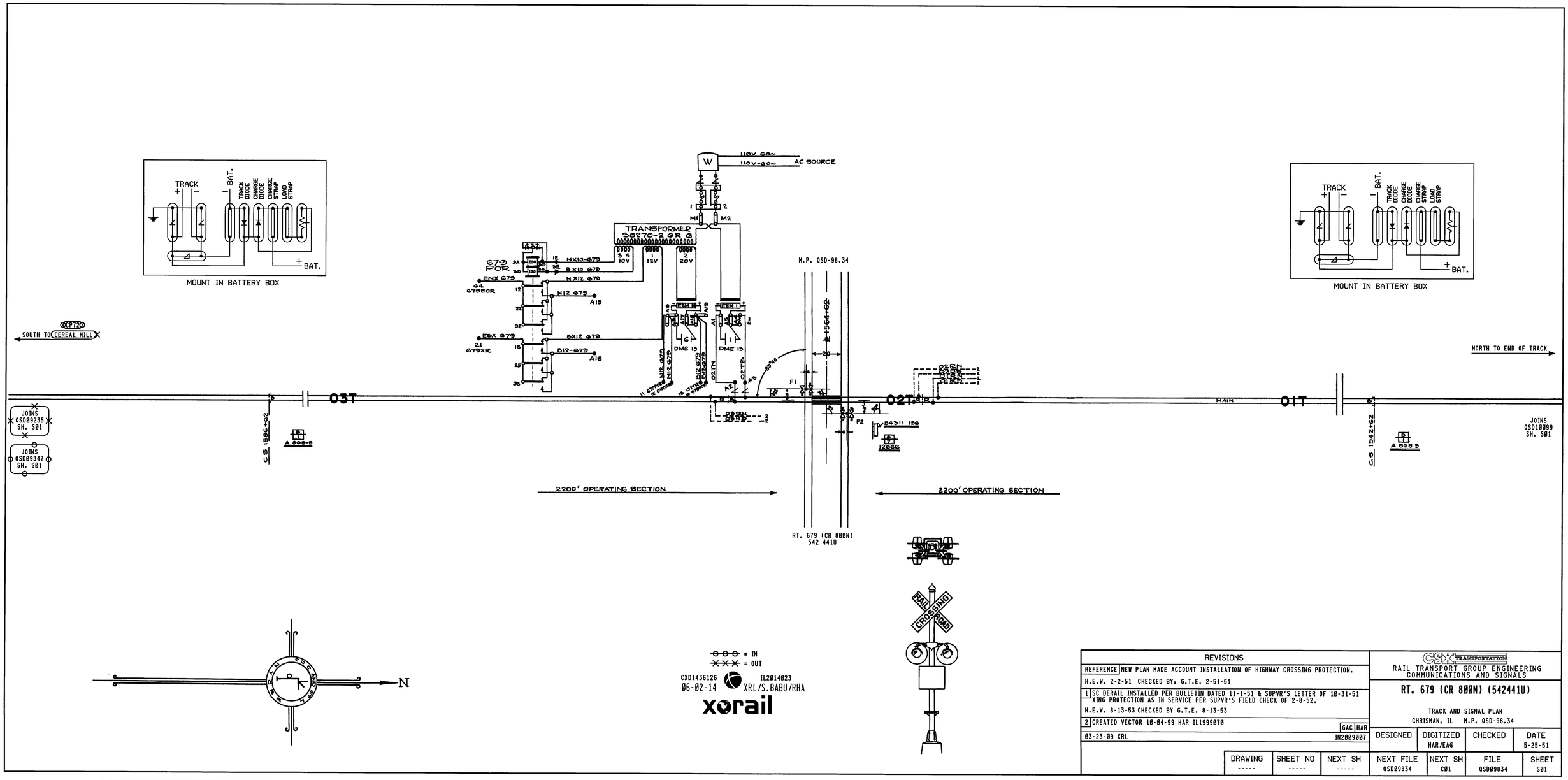

REVISIONS			
REFERENCE	NEW PLAN MADE ACCOUNT INSTALLATION OF HIGHWAY CROSSING PROTECTION.		
H.E.W. 2-2-51 CHECKED BY. G.T.E. 2-51-51			
1	SC DERAIL INSTALLED PER BULLETIN DATED 11-1-51 & SUPVR'S LETTER OF 10-31-51 XING PROTECTION AS IN SERVICE PER SUPVR'S FIELD CHECK OF 2-8-52.		
H.E.W. 8-13-53 CHECKED BY G.T.E. 8-13-53			
2	CREATED VECTOR 10-04-99 HAR IL1999070	GAC	HAR
03-23-09 XRL			IN2009007

CSX TRANSPORTATION
RAIL TRANSPORT GROUP ENGINEERING
COMMUNICATIONS AND SIGNALS

RT. 679 (CR 800N) (542441U)

TRACK AND SIGNAL PLAN
CHRISMAN, IL M.P. QSD-98.34

DESIGNED	DIGITIZED	CHECKED	DATE
	HAR/EAG		5-25-51

DRAWING	SHEET NO	NEXT SH	NEXT FILE	NEXT SH	FILE	SHEET
-----	-----	-----	QSD09834	C01	QSD09834	S01

RASTER FILE. QSD09834S01.CIT

MS FILE: QSD09834.S01