INDEX

CONTENTS

SH. NO.	CONTENTS	REVISION NO. 1	2	3	4	5	6	7	8	9
I01	INDEX AND REVISIONS	⧸								
S01	TRACK AND SIGNAL PLAN	⧸								
G01	INTERNAL SOFTWARE AND GATES LOGIC DIAGRAMS	⧸								
P01	MINIMUM PROGRAM STEPS REPORT CWE-07	⧸								
E01	POWER DISTRIBUTION	⧸								
C01	CROSSING DETECTION CIRCUITRY	⧸								
C02	DETECTION DEVICE CONSIST CWE-07	⧸								
C03	DETECTION CIRCUITRY CWE-07	⧸								
C04	DETECTION CIRCUITRY CWE-07	⧸								
C05	CROSSING WARNING DEVICE GATE CIRCUITRY	⧸								
C06	CROSSING WARNING DEVICE LIGHT CIRCUITRY	⧸								
C07	CROSSING WARNING DEVICE LIGHT CIRCUITRY	⧸								
C08	CROSSING WARNING DEVICE CIRCUITRY	⧸								
C09	SEAR II1 CONFIGURATION & FUNCTIONS	⧸								

⧸ = PLANS SENT TO FIELD (DISTRIBUTED)

☒ = PLANS AS-IN-SERVICED (UP TO DATE)

THIS PLAN DOES ☒ DOES NOT ☐
SUPERSEDE PLAN DATED 02-25-14
CSX PROJECT # IL2012037

( ) = NOTE

NEW WORK
CXD1436268 IL2012037A
07-04-14 XRL/S.BABU/
xorail

4000GCP.I01
REV. 03-31-06

REVISIONS

REV. NO.	PROJECT NO.	DESIGN DATE	IN SERVICE DATE	REVISION DATE
1	IL2012037A	07-04-14		

TO BE COMPLETED ON A.I.S.

CSX TRANSPORTATION
RAIL TRANSPORT GROUP ENGINEERING
COMMUNICATIONS AND SIGNALS

BURNHAM AVENUE 163649L

INDEX AND REVISIONS
BURNHAM, IL M.P. BID-1.07

DESIGNED	DIGITIZED	CHECKED	DATE
XRL/KSB	XRL/KSB	XRL	07-04-14

DESIGN DATE	REV. NO.	DRAWING	SHEET NO	FILE	SHEET
07-04-14	1	-----	-----	BID00107	I01

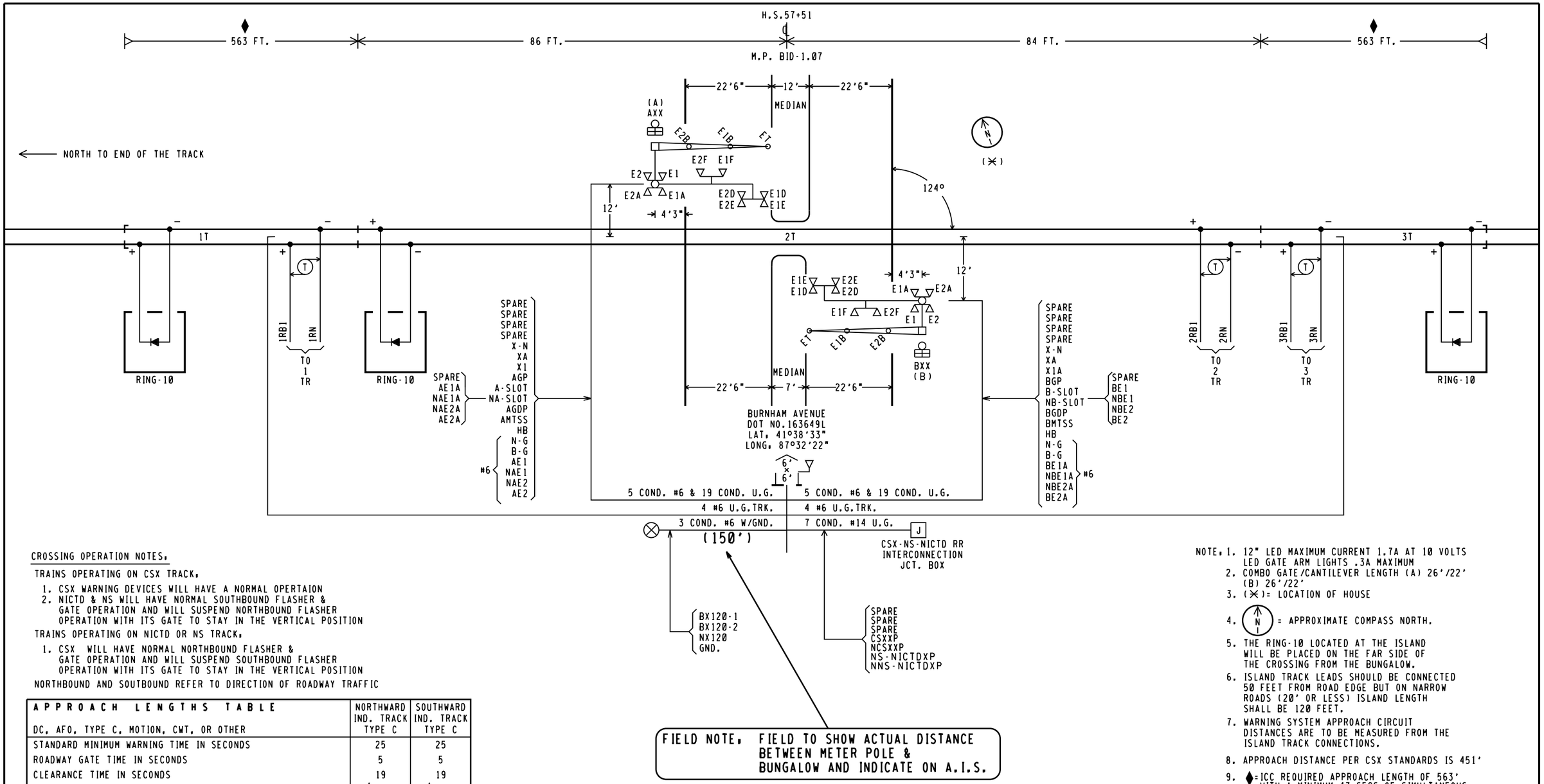

FIELD NOTE, FIELD TO SHOW ACTUAL DISTANCE BETWEEN METER POLE & BUNGALOW AND INDICATE ON A.I.S.

CROSSING OPERATION NOTES,

TRAINS OPERATING ON CSX TRACK,

1. CSX WARNING DEVICES WILL HAVE A NORMAL OPERTAION
2. NICTD & NS WILL HAVE NORMAL SOUTHBOUND FLASHER & GATE OPERATION AND WILL SUSPEND NORTHBOUND FLASHER OPERATION WITH ITS GATE TO STAY IN THE VERTICAL POSITION

TRAINS OPERATING ON NICTD OR NS TRACK,

1. CSX WILL HAVE NORMAL NORTHBOUND FLASHER & GATE OPERATION AND WILL SUSPEND SOUTHBOUND FLASHER OPERATION WITH ITS GATE TO STAY IN THE VERTICAL POSITION

NORTHBOUND AND SOUTBOUND REFER TO DIRECTION OF ROADWAY TRAFFIC

APPROACH LENGTHS TABLE DC, AFO, TYPE C, MOTION, CWT, OR OTHER	NORTHWARD IND. TRACK TYPE C	SOUTHWARD IND. TRACK TYPE C
STANDARD MINIMUM WARNING TIME IN SECONDS	25	25
ROADWAY GATE TIME IN SECONDS	5	5
CLEARANCE TIME IN SECONDS	19	19
DOT TRAFFIC LIGHT SIMULTANEOUS PREEMPT TIME IN SECONDS✳	♦49	♦49
DESIGNED WARNING TIME FOR TRAINS AT TIME TABLE SPEED	49 SEC.	49 SEC.
DOT TRAFFIC LIGHT ADVANCE PREEMPT TIME IN SECONDS ✳	0	0
CONTROL EQUIPMENT DECISION TIME IN SECONDS	5	5
DESIGNED DETECTION TIME FOR TRAINS AT TIME TABLE SPEED	54 SEC.	54 SEC.
TIME TABLE MAXIMUM TRAIN SPEED IN MILES PER HOUR	5	5
BUFFER SPEED IN MILES PER HOUR	1.25	1.25
TOTAL WARNING SYSTEM DESIGN SPEED IN MILES PER HOUR	6.25	6.25
APPROACH DISTANCE TO ISLAND EDGE IN FEET	♦ 563	♦ 563
HALF WIDTH OF ISLAND IN FEET	86	84
APPROXIMATE MILE POSTS FOR APPROACH CIRCUIT	♦ 1.19	♦ 0.95

✳AUTHORIZING AGENCY, ILDOT

✳DATE OF REQUIREMENT, 08/13/2012

✳AMOUNT OF TIME (SEC.), 49 SECS. SIMULTANEOUS

✳ICC REQUIRES AN APPROACH LENGTH OF 563' WITH A MINIMUM OF 47 SECS OF SIMULTANEOUS PREEMPTION WARNING TIME

NOTE, 1. 12" LED MAXIMUM CURRENT 1.7A AT 10 VOLTS LED GATE ARM LIGHTS .3A MAXIMUM
2. COMBO GATE/CANTILEVER LENGTH (A) 26'/22' (B) 26'/22'
3. (✳)= LOCATION OF HOUSE
4. (N) = APPROXIMATE COMPASS NORTH.
5. THE RING-10 LOCATED AT THE ISLAND WILL BE PLACED ON THE FAR SIDE OF THE CROSSING FROM THE BUNGALOW.
6. ISLAND TRACK LEADS SHOULD BE CONNECTED 50 FEET FROM ROAD EDGE BUT ON NARROW ROADS (20' OR LESS) ISLAND LENGTH SHALL BE 120 FEET.
7. WARNING SYSTEM APPROACH CIRCUIT DISTANCES ARE TO BE MEASURED FROM THE ISLAND TRACK CONNECTIONS.
8. APPROACH DISTANCE PER CSX STANDARDS IS 451'
9. ♦=ICC REQUIRED APPROACH LENGTH OF 563' WITH A MINIMUM 47 SECS OF SIMULTANEOUS PREEMPTION WARNING TIME

THIS PLAN DOES ☒ DOES NOT ☐
SUPERSEDE PLAN DATED, 02-25-14
CSX PROJECT # IL2012037

( ) = NOTE

NEW WORK
CXD1436268 IL2012037A
07-04-14 XRL/S.BABU/
xorail

CSX TRANSPORTATION
RAIL TRANSPORT GROUP ENGINEERING
COMMUNICATIONS AND SIGNALS

BURNHAM AVENUE 163649L

TRACK AND SIGNAL PLAN
BURNHAM, IL M.P. BID-1.07

DESIGNED	DIGITIZED	CHECKED	DATE
XRL/KSB	XRL/KSB	XRL	07-04-14

DESIGN DATE	REV. NO.	DRAWING	SHEET NO	FILE	SHEET
07-04-14	1	-----	-----	BID00107	S01

Minimum Program Steps Report

Location and SIN

DOT Number: 163649L
Milepost Number: BID-1.07
Site Name: BURNHAM AVENUE

SIN: 712549900716 *

* Parameter is part of office check number calculation.

MCF and Template Selection

MCF Name: GCP-T6X-02-1.mcf
MCF Revision: 021
MCFCRC: 6076E435

Template = 1A.6 Trk Bi *

* Parameter is part of office check number calculation.

Minimum Program Steps

TEMPLATE: module configuration
Track 1 Slot = Not Used *
Track 2/RIO 1 Slot = RIO *

TEMPLATE: preemption
Preempt Logic = Simult *

TEMPLATE: AND 1 XR
AND 1 Enable Used = Yes *

TEMPLATE: SSCC
SSCC1+2 GPs Coupled = No *
SSCC-1 Number of GDs = 1 *
SSCC-2 Number of GPs = 1 *
SSCC-2 Number of GDs = 1 *
SSCC 1 : Lamp Neutral Test = Off (Set in Field)
SSCC 2 : Lamp Neutral Test = Off (Set in Field)

TEMPLATE: OP assignment 1
OUT 2.1 = Sim Preempt *

TEMPLATE: IP assignment 1
IN 2.3 = Preempt Health *
IN 2.4 = AND 3 Enable *

TEMPLATE: IP assignment SSCC
IN 7.2 = AND 1 XR Enable *
IN 7.5 = Passthru State 1 *
IN 8.4 = GD 2.1 *
IN 8.5 = AND 4 Enable *

AND: track Anding
AND 2 Used = Yes *
AND 3 Used = Yes *
AND 4 Used = Yes *

AND: AND 2
AND 2 Enable Used = Yes *
AND 2 Enable Drop = 19 sec *

AND: AND 3
AND 3 Enable Used = Yes *

AND: AND 4
AND 4 Enable Used = Yes *

ADVANCED: internal I/O 1
Pass Thrus = Yes *
Int.1 Sets = AND 2 Enable *
Int.1 Set by = AND 1 XR *
Int.2 Sets = AND 3 Enable *
Int.2 Set by = AND 1 XR *
Int.3 Sets = GP 1.1 *
Int.3 Set by = Passthru State 1 *
Int.4 Sets = AND 4 Enable *
Int.4 Set by = Passthru State 1 *

ADVANCED: internal I/O 2
Int.5 Sets = GP 2.1 *
Int.5 Set by = AND 4 *

ADVANCED: site options
Daylight Savings = On *

SSCC: 1
SSCC-1 Activation = AND 2 *
SSCC-1 Gate Delay = 5 sec *
SSCC 1 : Flash Rate = 55 *

SSCC: 2
SSCC-2 Activation = AND 3 *
SSCC-2 Gate Delay = 5 sec *
SSCC 2 : Flash Rate = 55 *

SEAR
DI 1 = Gnd Flt Tester 1 *
DI 2 = Gnd Flt Tester 2 *
Rly 1 = Ground Fault Test *
Rly 2 = AC Control *

SEAR: slot 1-4 inputs
IN 2.1 = POK 1 *

SEAR: slot 7-8 inputs
IN 7.1 = TSS 1 *
IN 7.3 = Isl 1 Enable *
IN 8.1 = TSS 2 *
IN 8.3 = POK 2 *

* Parameter is part of office check number calculation.

Check Numbers

Office Check No. (DT 4.6.0): 53A3C222
Office Check Number: 53A3C222
Config. Check Number: 40B9E151
(Based on MCF Revision 021)

Parameters not part of office check number calculation:

SSCC 1 : Lamp Neutral Test = Off (Set in Field)
SSCC 2 : Lamp Neutral Test = Off (Set in Field)

Comments

<none>

THIS PLAN DOES ☒ DOES NOT ☐
SUPERSEDE PLAN DATED 02-25-14
CSX PROJECT # IL2012037

NEW WORK
CXD1436268 IL2012037A
07-04-14 XRL/S.BABU/
xorail

CSX TRANSPORTATION
RAIL TRANSPORT GROUP ENGINEERING
COMMUNICATIONS AND SIGNALS

BURNHAM AVENUE 163649L

MINIMUM PROGRAM STEPS REPORT CWE-07
BURNHAM, IL M.P. BID-1.07

4000GCP.P01
REV. 06-30-09

DESIGNED	DIGITIZED	CHECKED	DATE
XRL/KSB	XRL/KSB	XRL	07-04-14

DESIGN DATE	REV. NO.	DRAWING	SHEET NO	FILE	SHEET
07-04-14	1	-----	-----	BID00107	P01

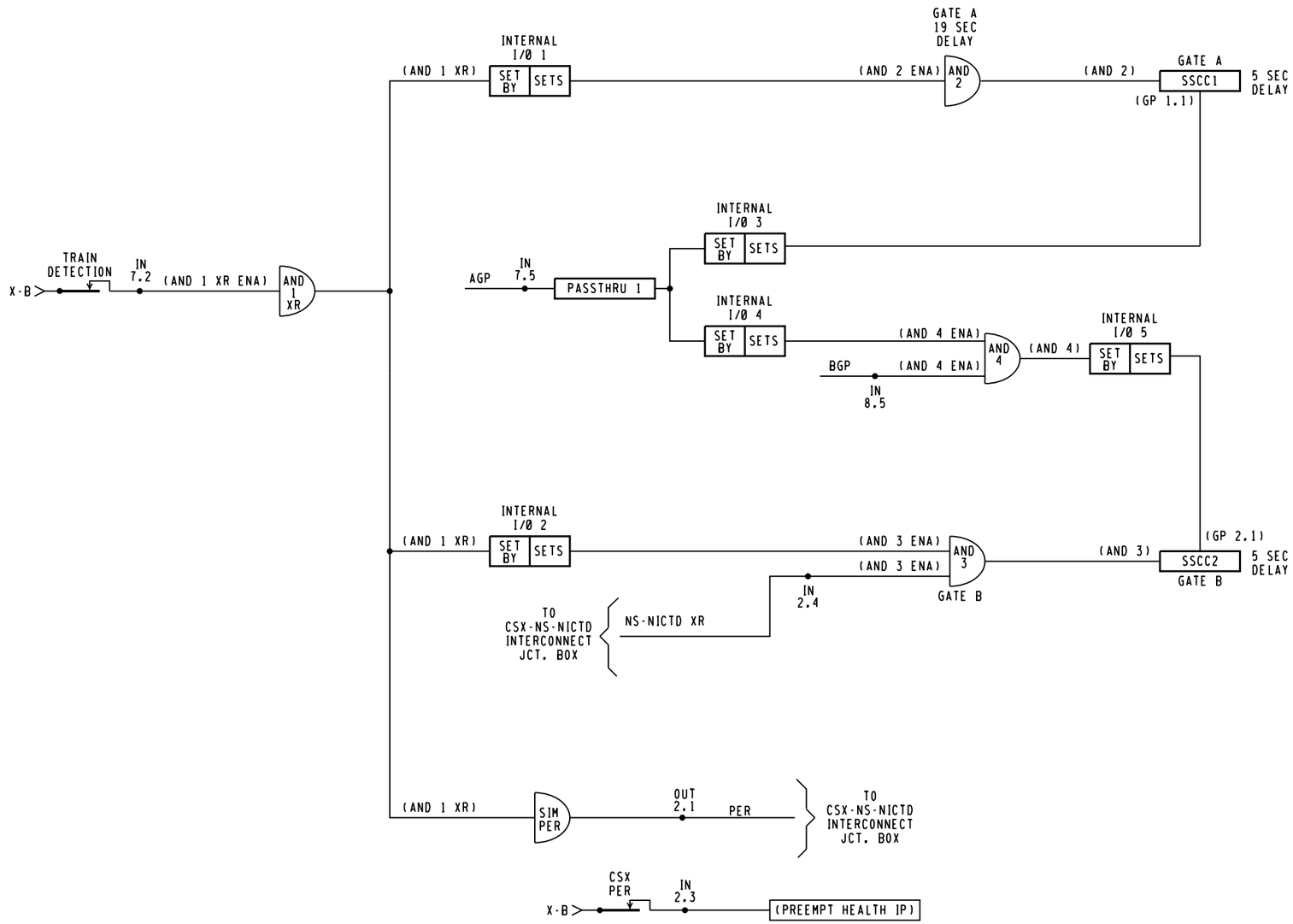

SYMBOL	DEFINE
D	INTERNAL SOFTWARE GATE

NEW WORK
CXD1436268 IL2012037A
07-04-14 XRL/S.BABU/
xorail

CSX TRANSPORTATION
RAIL TRANSPORT GROUP ENGINEERING
COMMUNICATIONS AND SIGNALS

BURNHAM AVENUE 163649L

INTERNAL SOFTWARE AND GATES LOGIC DIAGRAMS
BURNHAM, IL M.P. BID-1.07

4000GCP.G01
REV. 11-10-05

DESIGNED	DIGITIZED	CHECKED	DATE
XRL/KSB	XRL/KSB	XRL	07-04-14

DESIGN DATE	REV. NO.	DRAWING	SHEET NO	FILE	SHEET
07-04-14	1	-----	-----	BID00107	G01

TOP ROW

ACR			X-B POKR			MCR			NS-NICTDXR			CSXPER			1TR			2TR			3TR			1SR			3SR		
12	B	B77	9	11 F	N68	9 F	11	N41	12 F		B8	12 F		B8	12 FB		B51	12 F		B51	12 FB		B51	12 B		B8	12 B		B8
15	B	C30	10 F	12	C48	10	12	C48	15 F		C30	15 F		C30	15		C30	15		C30	15		C30	15		C30	15		C30
22	B		OB POKR		C49	B-G POKR		C49	22			22			22			22 B			22			22 B			22 B		
25	B		9	11 F	N68	9 F	11 F	N68	23			23 F			23 F			23 F			23 F			23 F			23 F		
32	B		10 F	12	C48	10 F	12	C48	25			25 F			25 F			25 F			25 F			25 F			25 F		
35	B								32			32			32			32 F			32			32			32		
									35			35			35			35 B			35			35			35		

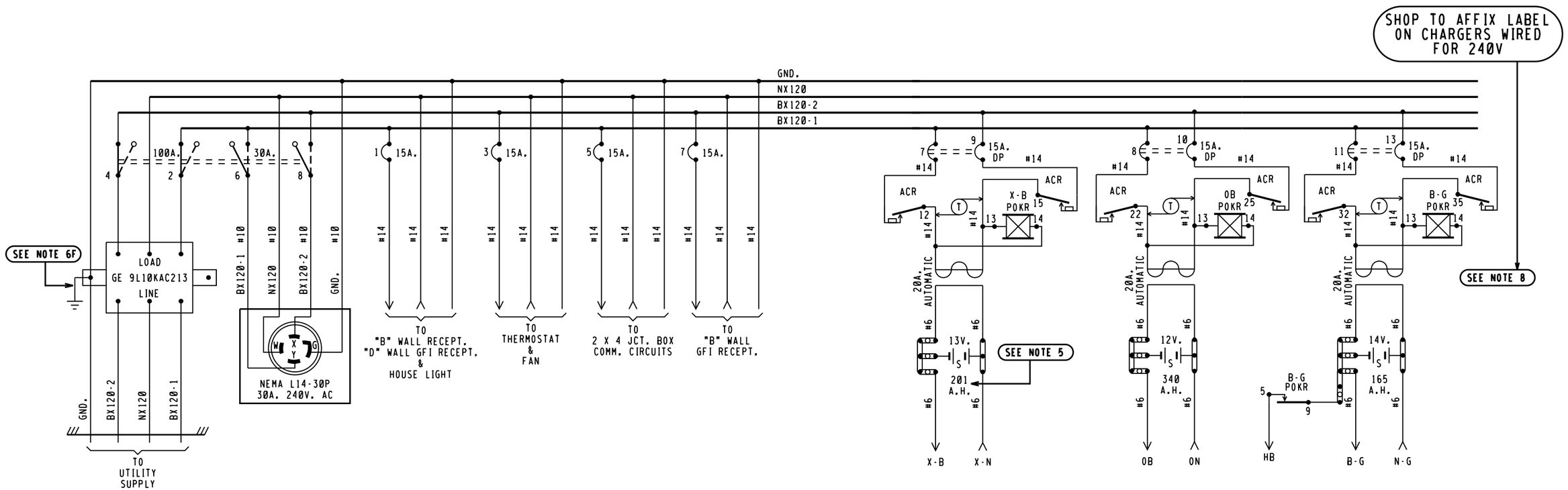

BX120-1	BX120-2
11.0 AMPS	11.0 AMPS

MAXIMUM LOAD CALCULATED PER SS360

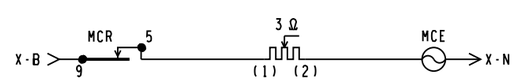

NOTES:

1 - REFERENCES ARE PER SCMS-13.
2 - ARRESTERS ARE PER SS382.
3 - SHELF RELAY PLACEMENT ON CONSIST CHART HAS NO SIGNIFICANCE.
4 - PLUG-IN RELAYS ARE VIEWED FROM THE FRONT OF RACK.
5 - BATTERY A.H. CAPACITY SHOWN IS THE MINIMUM REQUIREMENT.
6 - WIRING
  A - FEED TO ALL BUSSES, LIGHT CIRCUITS,MOTOR CIRCUITS TO BE #10 FLEX.
  B - 120-VOLT FEED FROM ENTRANCE TO POWER BUSS TO BE #10 FLEX.
  C - ALL TRACK WIRES TO BE #10 FLEX.
  D - ALL OTHERS TO BE #16 FLEX UNLESS NOTED.
  E - GROUND WIRE NOT NECESSARY WHEN GE ARRESTER IS MOUNTED ON GROUND PLANE OR METAL ENCLOSURE AFFIXED DIRECTLY TO BUNGALOW METALLIC STRUCTURAL MEMBER.
7 - CIRCUIT INTERRUPTERS 2 & 4 ARE MECHANICALLY INTERLOCKED WITH CIRCUIT INTERRUPTERS 6 & 8.
8 - CHARGERS TO BE WIRED FOR 240VAC
9 - CIRCUIT BREAKER PANEL-00116L125G (16 SPACES)

= NOTE

NEW WORK
CXD1436268 IL2012037A
07-04-14 XRL/S.BABU/
xorail

6'X 6' PTC CROSSING HOUSE

CSX TRANSPORTATION
RAIL TRANSPORT GROUP ENGINEERING
COMMUNICATIONS AND SIGNALS

BURNHAM AVENUE 163649L

POWER DISTRIBUTION
BURNHAM, IL M.P. BID-1.07

4000GCP.E01
REV. 11-30-08

DESIGNED	DIGITIZED	CHECKED	DATE
XRL/KSB	XRL/KSB	XRL	07-04-14

DESIGN DATE	REV. NO.	DRAWING	SHEET NO	FILE	SHEET
07-04-14	1	-----	-----	BID00107	E01

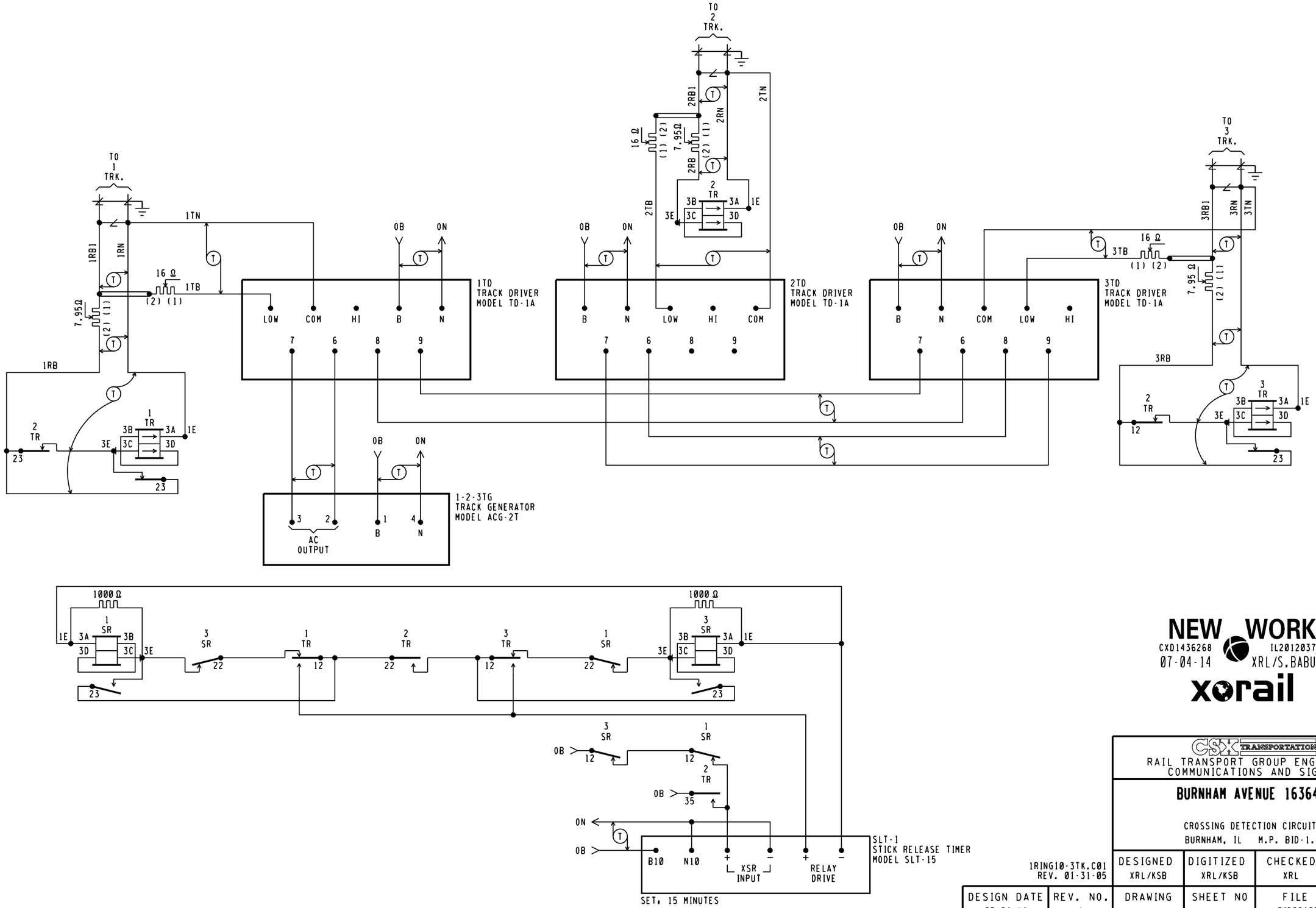

NEW WORK
CXD1436268 IL2012037A
07-04-14 XRL/S.BABU/
xorail

CSX TRANSPORTATION
RAIL TRANSPORT GROUP ENGINEERING
COMMUNICATIONS AND SIGNALS

BURNHAM AVENUE 163649L

CROSSING DETECTION CIRCUITRY
BURNHAM, IL M.P. BID-1.07

1RING10-3TK.C01
REV. 01-31-05

DESIGN DATE	REV. NO.	DRAWING	SHEET NO	FILE	SHEET
07-04-14	1	-----	-----	BID00107	C01

DESIGNED	DIGITIZED	CHECKED	DATE
XRL/KSB	XRL/KSB	XRL	07-04-14

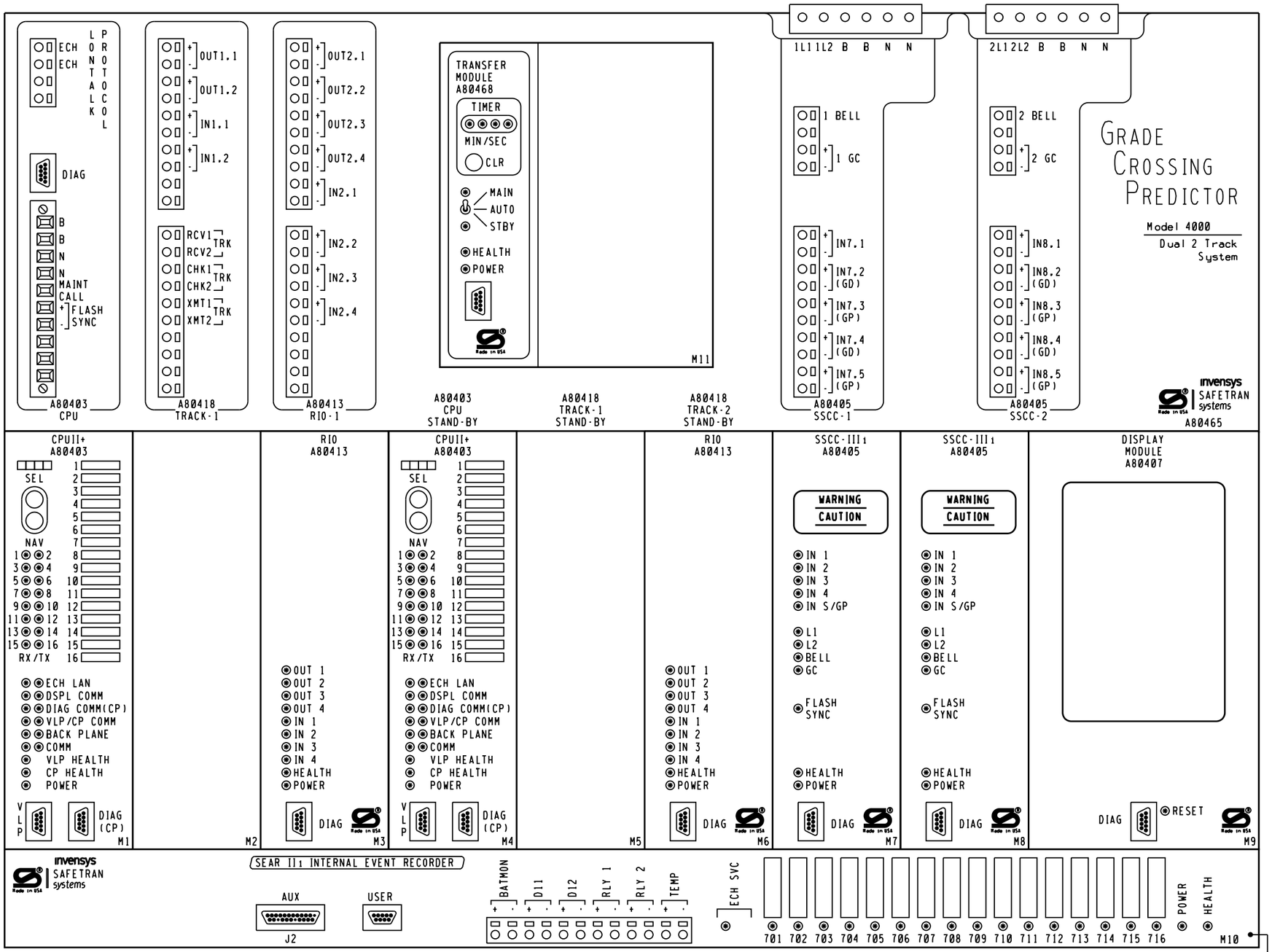

DIMENSIONS 23.25"W X 22.15"H X 12.38"D

GCP 4000 APPLICATION NOTES.

1. THE GRADE CROSSING PREDICTOR (GCP) IS A MODULAR MICROPROCESSOR CONTROLLED SYSTEM THAT IS DEPLOYED TO CONTINUALLY MONITOR THE APPROACHES TO RAILROAD GRADE CROSSINGS AND TO CONTROL THE LAMPS, GATES AND BELLS ASSOCIATED WITH THOSE CROSSINGS. WHEN EQUIPPED WITH THE SEAR II1 MODULE THE GCP 4000 WILL RECORD EVENTS AND REPORT ALARMS WHEN CONNECTED TO AN OFFICE SYSTEM.

2. THE GCP 4000 GCP (A80465) IS A TWO TRACK REDUNDANT UNIT CAPABLE OF DRIVING 4 INDEPENDENT FLASHER AND GATE SIGNALS AND RECORDING EVENTS AND REPORTING ALARMS. THIS A80465 INCLUDES THE FOLLOWING MODULES.

SLOT	MODULE	FUNCTION	PART NO.
M1	CPU-II+	MAIN	A80403
M2	PANEL	NONE	D39325
M3	RIO-1	MAIN	A80413
M4	CPU-II+	STANDBY	A80403
M5	PANEL	NONE	D39325
M6	RIO-1	STANDBY	A80413
M7	SSCC-III1	A SIGNAL	A80405
M8	SSCC-III1	B SIGNAL	A80405
M9	DISPLAY MODULE		A80407
TOP CENTER	TRANSFER UNIT		A80468
LOWER BAY	SEAR II1	RECORDER	A80410

3. EACH TRACK MODULE HAS TWO PROGRAMMABLE INPUTS AND TWO PROGRAMMABLE OUTPUTS.

4. THE SEAR II1 INTERNAL EVENT RECORDER HAS INPUTS FOR ONE BATTERY MONITOR, TWO NON-VITAL INPUTS AND TWO PROGRAMMABLE RELAY DRIVES (HEEL/FRONT).

5. LOCATED ON THE FRONT OF EACH MODULE THERE ARE LED LIGHTS TO INDICATE THE ACTIVITY OF CERTAIN FUNCTIONS OCCURRING INSIDE THE GCP.

6. BETWEEN SLOT 1 & 2 THERE IS A CHASSIS INDENTIFICATION CHIP (CIC) SOCKET AND AN ECD CONNECTOR (DB-25 FEMALE).

7. UPON THE FAILURE OF A MODULE IN SLOTS M1-M3 THE AUTOMATIC TRANSFER UNIT SWITCHES TO THE STANDBY MODULES IN SLOTS M4-M6.

8. THE GCP 4000 GCP (A80465) MAY USE RIO MODULES IN SLOTS M3 AND M6.

NEW WORK
CXD1436268 IL2012037A
07-04-14 XRL/S.BABU/
xorail

CSX TRANSPORTATION
RAIL TRANSPORT GROUP ENGINEERING
COMMUNICATIONS AND SIGNALS

BURNHAM AVENUE 163649L

DETECTION DEVICE CONSIST CWE-07
BURNHAM, IL M.P. BID-1.07

4000GCP.C01
REV. 11-30-08

DESIGNED	DIGITIZED	CHECKED	DATE
XRL/KSB	XRL/KSB	XRL	07-04-14

DESIGN DATE	REV. NO.	DRAWING	SHEET NO	FILE	SHEET
07-04-14	1	-----	-----	BID00107	C02

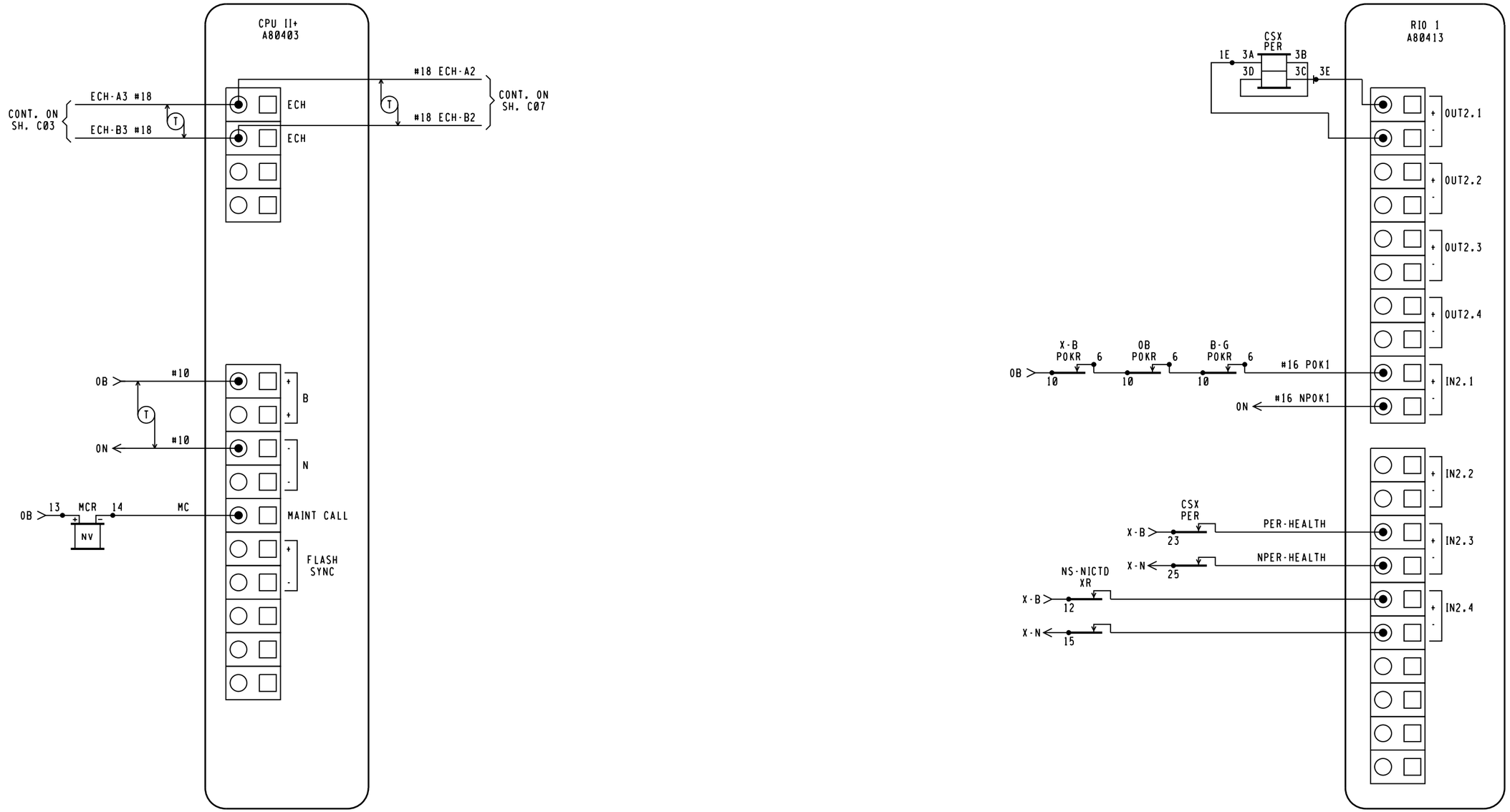

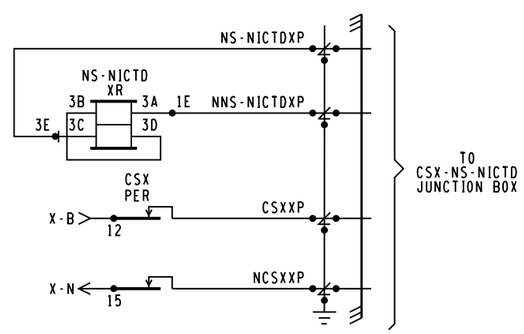

NOTE,

ECHELON CONNECTIONS NOT TO EXCEED 53' IN LENGTH AND TOTAL LENGTH COMBINED NOT TO EXCEED 430' WITH A MAXIMUM OF 8 NODES. RECOMMEND USE BELDEN WIRE CABLE #8461 OR EQUIVALENT.

NEW WORK
CXD1436268 IL2012037A
07-04-14 XRL/S.BABU/
xorail

CSX TRANSPORTATION
RAIL TRANSPORT GROUP ENGINEERING
COMMUNICATIONS AND SIGNALS

BURNHAM AVENUE 163649L

DETECTION CIRCUITRY CWE-07
BURNHAM, IL M.P. BID-1.07

4000GCP.C02
REV. 11-30-08

DESIGNED	DIGITIZED	CHECKED	DATE
XRL/KSB	XRL/KSB	XRL	07-04-14

DESIGN DATE	REV. NO.	DRAWING	SHEET NO	FILE	SHEET
07-04-14	1	-----	-----	BID00107	C03

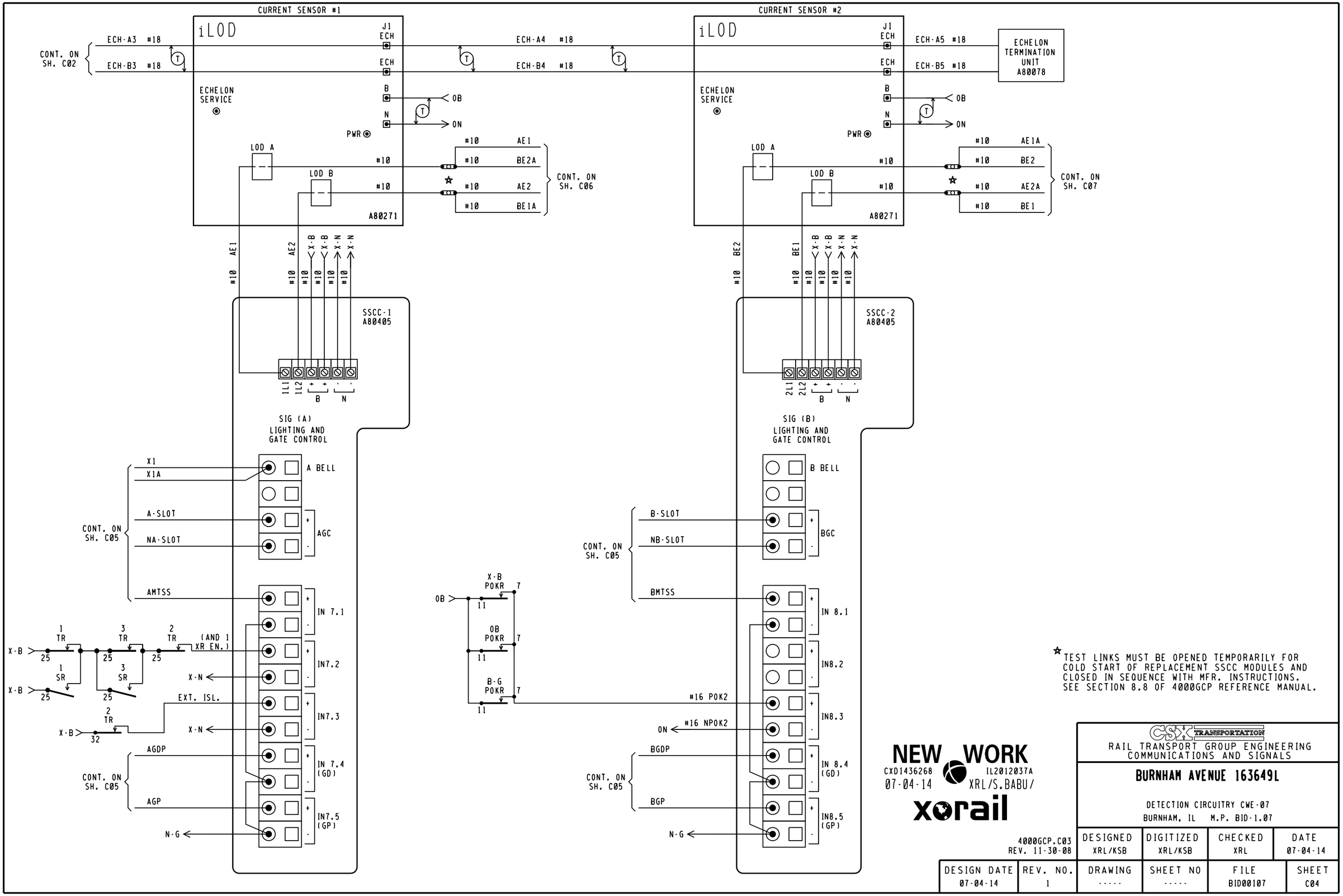

☆ TEST LINKS MUST BE OPENED TEMPORARILY FOR COLD START OF REPLACEMENT SSCC MODULES AND CLOSED IN SEQUENCE WITH MFR. INSTRUCTIONS. SEE SECTION 8.8 OF 4000GCP REFERENCE MANUAL.

NEW WORK
CXD1436268 IL2012037A
07-04-14 XRL/S.BABU/
xorail

CSX TRANSPORTATION
RAIL TRANSPORT GROUP ENGINEERING
COMMUNICATIONS AND SIGNALS

BURNHAM AVENUE 163649L

DETECTION CIRCUITRY CWE-07
BURNHAM, IL M.P. BID-1.07

4000GCP.C03
REV. 11-30-08

DESIGNED	DIGITIZED	CHECKED	DATE
XRL/KSB	XRL/KSB	XRL	07-04-14

DESIGN DATE	REV. NO.	DRAWING	SHEET NO	FILE	SHEET
07-04-14	1	-----	-----	BID00107	C04

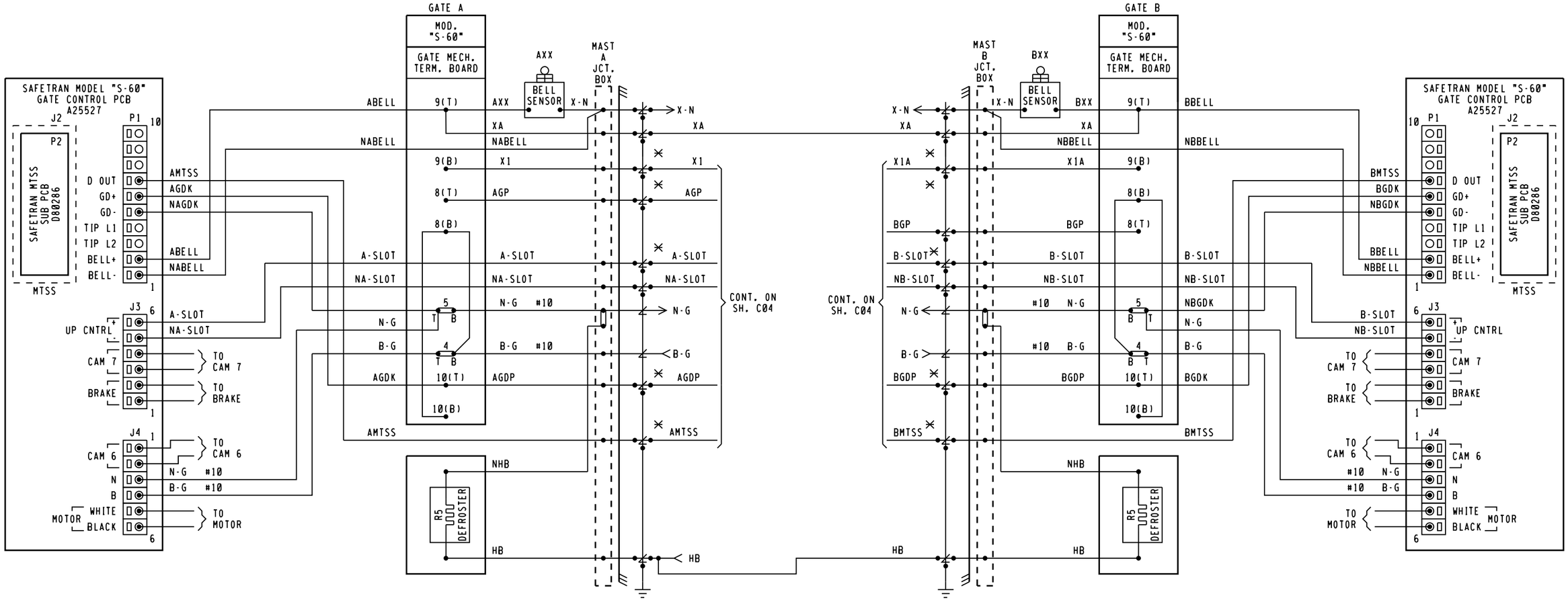

NOTES:

1. ✕ = TEST LINKS MUST BE OPEN TEMPORARILY FOR COLD START OF REPLACEMENT SSCC MODULES AND AND CLOSED IN SEQUENCE WITH MFR. INSTRUCTIONS. SEE SECTION 8.8 OF 4000GCP REFERENCE MANUAL.
2. = TERMINAL IN JCT. BOX BASE
3. ALL WIRING #16 UNLESS NOTED OTHERWISE.

NEW WORK
CXD1436268 IL2012037A
07-04-14 XRL/S.BABU/
xorail

CSX TRANSPORTATION
RAIL TRANSPORT GROUP ENGINEERING
COMMUNICATIONS AND SIGNALS

BURNHAM AVENUE 163649L

CROSSING WARNING DEVICE GATE CIRCUITRY
BURNHAM, IL M.P. BID-1.07

4000GCP.C04
REV. 07-31-09

DESIGNED	DIGITIZED	CHECKED	DATE
XRL/KSB	XRL/KSB	XRL	07-04-14

DESIGN DATE	REV. NO.	DRAWING	SHEET NO	FILE	SHEET
07-04-14	1	-----	-----	BID00107	C05

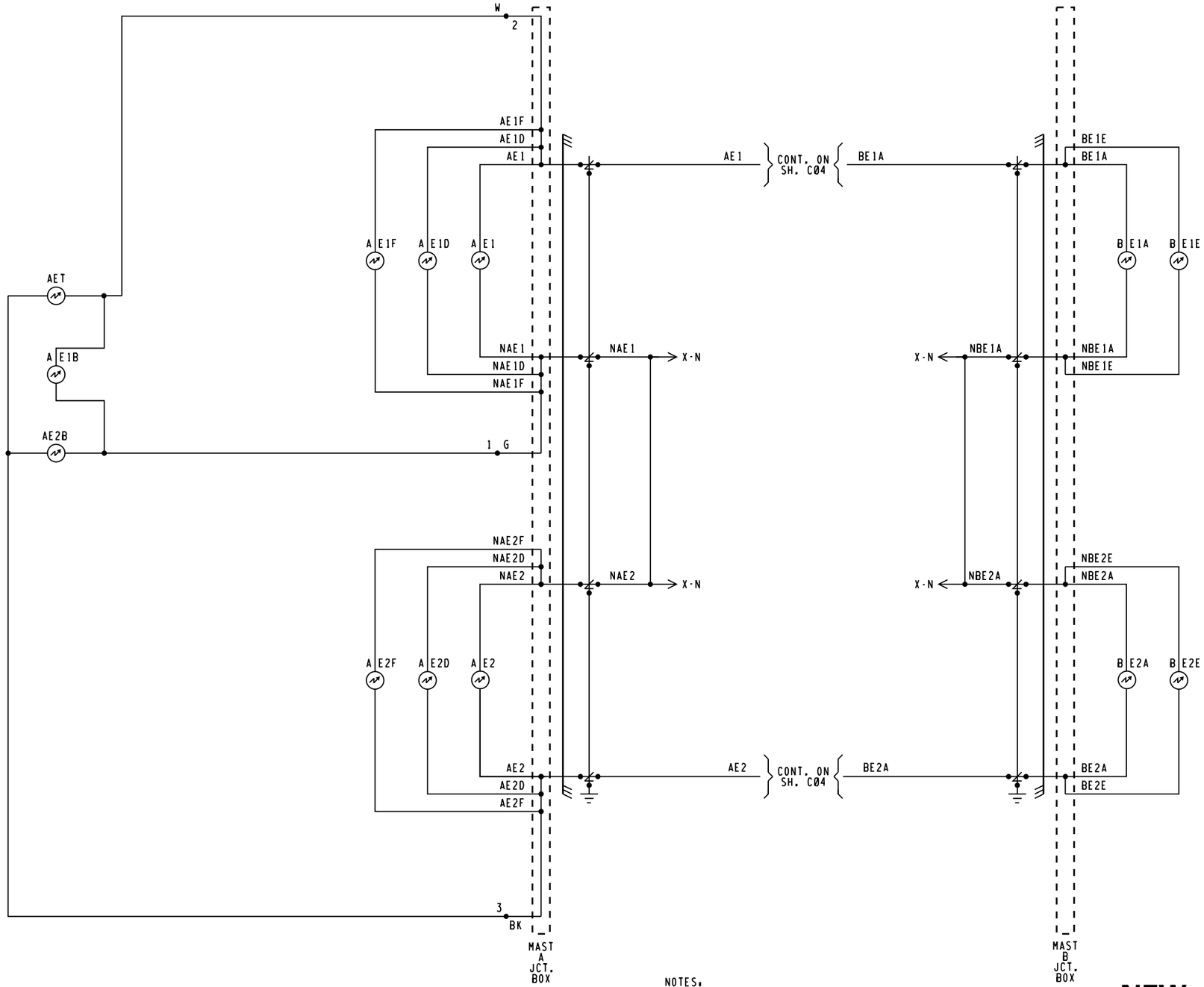

NOTES:

1. = TERMINAL IN JUNCTION BOX
2. WHEN 7 OR MORE LIGHTS ON A SINGLE STRUCTURE REFER TO SS382 FOR REQUIRED ARRESTERING
3. FEEDS TO ALL BUSSES AND LIGHT CIRCUITS ARE #10 FLEX
4. UNLESS NOTED ALL OTHER WIRING #16
5. CABLING SPECIFICATIONS SHOWN ON SH. S01

NEW WORK
CXD1436268 IL2012037A
07-04-14 XRL/S.BABU/
xorail

4000GCP.C05
REV. 07-31-09

CSX TRANSPORTATION
RAIL TRANSPORT GROUP ENGINEERING
COMMUNICATIONS AND SIGNALS

BURNHAM AVENUE 163649L

CROSSING WARNING DEVICE LIGHT CIRCUITRY
BURNHAM, IL M.P. BID-1.07

DESIGNED	DIGITIZED	CHECKED	DATE
XRL/KSB	XRL/KSB	XRL	07-04-14

DESIGN DATE	REV. NO.	DRAWING	SHEET NO	FILE	SHEET
07-04-14	1	-----	-----	BID00107	C06

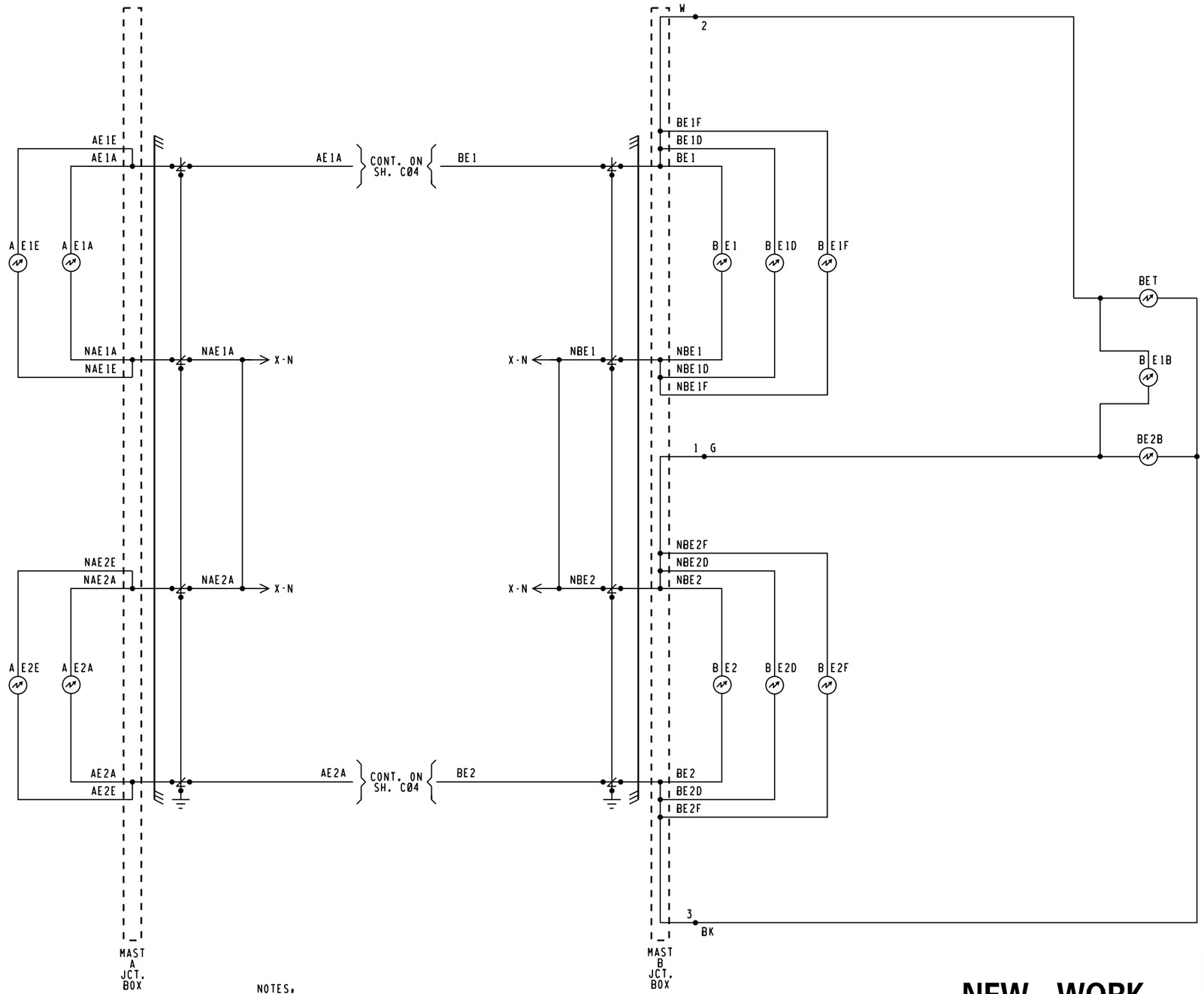

NOTES.

1. = TERMINAL IN JUNCTION BOX
2. WHEN 7 OR MORE LIGHTS ON A SINGLE STRUCTURE REFER TO SS382 FOR REQUIRED ARRESTERING
3. FEEDS TO ALL BUSSES AND LIGHT CIRCUITS ARE #10 FLEX
4. UNLESS NOTED ALL OTHER WIRING #16
5. CABLING SPECIFICATIONS SHOWN ON SH. S01

NEW WORK
CXD1436268 IL2012037A
07-04-14 XRL/S.BABU/
xorail

CSX TRANSPORTATION
RAIL TRANSPORT GROUP ENGINEERING
COMMUNICATIONS AND SIGNALS

BURNHAM AVENUE 163649L

CROSSING WARNING DEVICE LIGHT CIRCUITRY
BURNHAM, IL M.P. BID-1.07

4000GCP.C05
REV. 07-31-09

DESIGNED	DIGITIZED	CHECKED	DATE
XRL/KSB	XRL/KSB	XRL	07-04-14

DESIGN DATE	REV. NO.	DRAWING	SHEET NO	FILE	SHEET
07-04-14	1	-----	-----	BID00107	C07

WAYSIDE ACCESS GATEWAY CONFIGURATION	
SITE ATCS ADDRESS	7.125.499.007.07.01 7.125.LLL.GGG.SS.DD
SERIAL INTERFACE	38,400,NONE,8,1/NOFLOW
SERIAL FORMAT	RAW
WAG TEST MODE	DISABLED
ECHELON ADDRESS	01.07
UDP PORTS	5000, 5001, 5002, 5003
ROUTE TABLE EXPIRY	5400 SEC
BROADCAST MEDIUM	IP ETHERNET
TCP PORTS	23, 10023, 6001, 6002
DHCP SERVER	DISABLED
IP ADDRESS	192.168.13.1
TYPE 7 ROUTE LENGTH	12--7RRLLLGGGSS
IP NETWORK MASK	255.255.255.0
WAG CIRCUIT ID	DISABLE
ROUTING REGION DOMAIN 1	OCGSERVER1.JAX.COM
ATCS SERVER UDP PORT NUMBER	6001
TELNET NUMBERS	WAG 6002, SERIAL 10023
DEFAULT GATEWAY IP	192.168.013.031

NOTE TO INSPECTOR, AT INSTALLATION OF WAG, OR UPDATE OF THE CONFIGURATION, OR UPDATE OF THE EXECUTIVE PROGRAM, MARK-UP CONFIGURATION TABLE FOR AS IN SERVICE PLANS

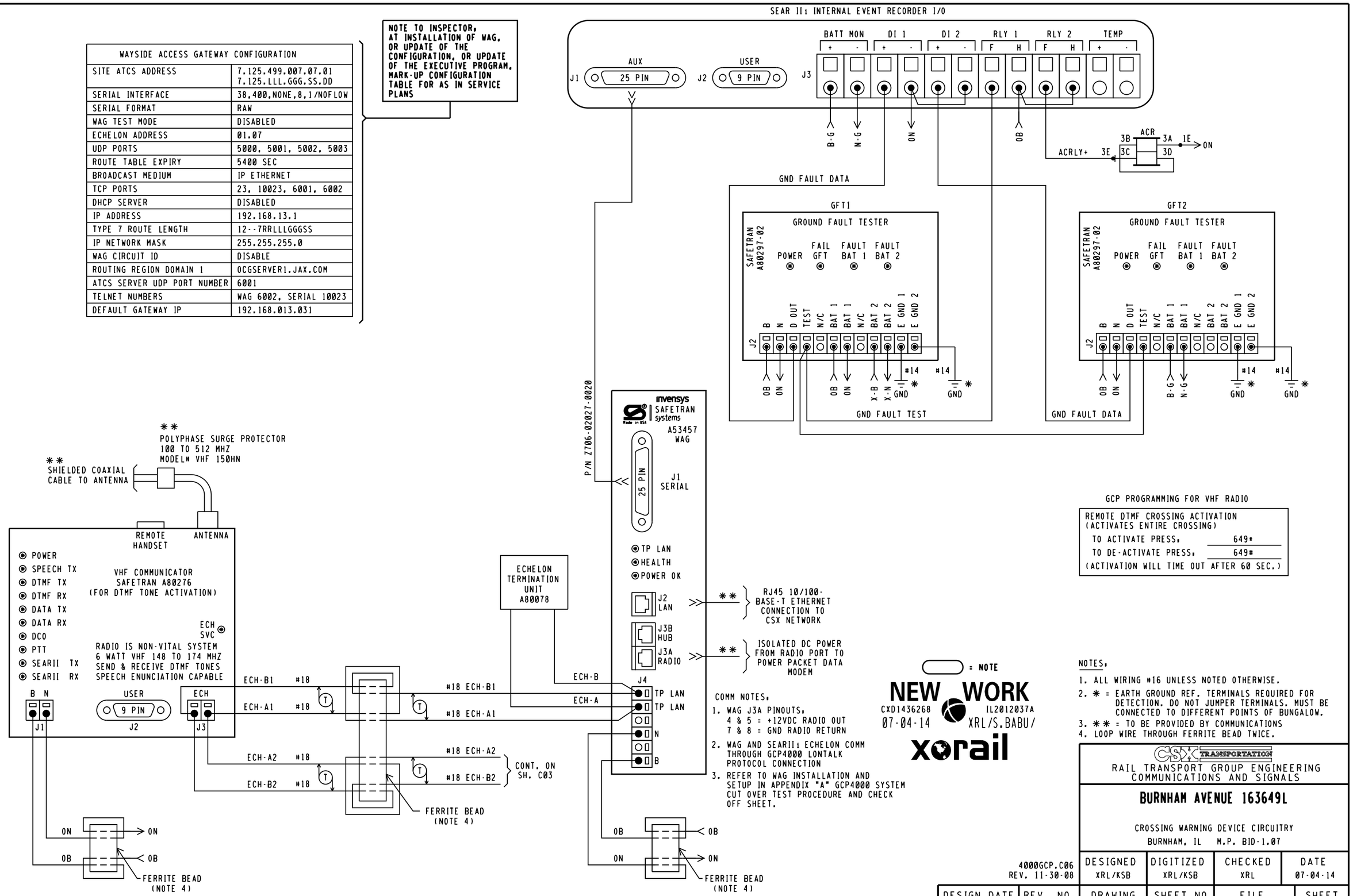

GCP PROGRAMMING FOR VHF RADIO

REMOTE DTMF CROSSING ACTIVATION (ACTIVATES ENTIRE CROSSING)	
TO ACTIVATE PRESS:	649*
TO DE-ACTIVATE PRESS:	649#
(ACTIVATION WILL TIME OUT AFTER 60 SEC.)	

NOTES:

1. ALL WIRING #16 UNLESS NOTED OTHERWISE.
2. * = EARTH GROUND REF. TERMINALS REQUIRED FOR DETECTION. DO NOT JUMPER TERMINALS. MUST BE CONNECTED TO DIFFERENT POINTS OF BUNGALOW.
3. ** = TO BE PROVIDED BY COMMUNICATIONS
4. LOOP WIRE THROUGH FERRITE BEAD TWICE.

CSX TRANSPORTATION
RAIL TRANSPORT GROUP ENGINEERING
COMMUNICATIONS AND SIGNALS

BURNHAM AVENUE 163649L

CROSSING WARNING DEVICE CIRCUITRY
BURNHAM, IL M.P. BID-1.07

4000GCP.C06
REV. 11-30-08

DESIGNED	DIGITIZED	CHECKED	DATE
XRL/KSB	XRL/KSB	XRL	07-04-14

DESIGN DATE	REV. NO.	DRAWING	SHEET NO	FILE	SHEET
07-04-14	1	-----	-----	BID00107	C08

DEFAULTS AND/OR STYLE		FIELD RECORD
SEAR II1 EXECUTIVE PROGRAM	VERSION, 9V725A01	VERSION, _____
APPLICATION PROGRAM (IF LOADED)	VERSION, 9V864A01	VERSION, _____

NOTE TO INSPECTOR,
AT IN SERVICE OF SEAR II1 OR UPDATE OF ITS INTERNAL EXECUTIVE PROGRAM OR ITS CSXT APPLICATION PROGRAM, NOTE THE VERSION NUMBER OF EACH PROGRAM MUST IN THE BLANK FIELDS.

SITE SET UP MENU	
FUNCTION	LED DISPLAY
DATE/TIME	XX-XX-XXXX XX:XX:XX
AUTOMATIC DST ADJUSTMENT	YES
TIME ZONE	EASTERN
SITE NAME	BURNHAM AVENUE
MILEPOST	BID-1.07
DOT NUMBER	163649L
TESTER TYPE	CROSSING
DATE FORMAT	MM-DD-YYYY
TEMP FORMAT	FAHRENHEIT
INDICATE HOLD (SEC)	0
INDICATE REFRESH (SEC)	60
SITE ATCS ADDRESS	7.125.499.007.99.01 (7.RRR.LLL.GGG.99.01)
SITE TYPE	COLLECTOR
OFFICE ADDRESS	2.125.00.0000 (2.RRR.NN.DDDD)
POLL ID	1
MODE	GEN/ATCS
WAMS XID	DISABLED
OFFICE COMM. DEVICE	■WAG (ECHELON) □DIRECT (RS232) □MCM (ECHELON) □MCM (RS232) □DIAL MODEM □S200 RADIO (RS422)
RADIO ATCS ADDR	7.125.499.007.07.01 (7.RRR.LLL.GGG.NN.01)
FIELD COMM. DEVICE	□WAG (ECHELON) ■NONE □VHF COMM. (ECHELON) □VHF COMM. (RS232) □SPREAD-SPECTRUM (RS232)
USER PORT BAUD	57,600
USER PORT DATA BITS	8
USER PORT PARITY	NONE
USER PORT STOP BITS	1
USER PORT FLOW CONTROL	NONE
AUX PORT BAUD	38,400
AUX PORT DATA BITS	8
AUX PORT PARITY	NONE
AUX PORT STOP BITS	1
AUX PORT FLOW CONTROL	NONE

= NOTE

NEW WORK
CXD1436268 IL2012037A
07-04-14 XRL/S.BABU/
xorail

	CONTROL SYSTEM CONFIGURATION MENU QUESTIONS	
	OPTION	SELECTION
NOTE 9 -	RESET NAMES / MODULES	NO ■ YES □
	RAILROAD NUMBER	125
	CROSSING CONFIGURATION	NORMAL □ SPLIT GATE ■ EXTERNAL ENTRANCE GATE CONTROLLER(S) □
	AND1 USED AS XR	NO □ YES ■
	AND2 USED AS XR	NO □ YES ■
	AND3 USED AS XR	NO □ YES ■
	AND4 USED AS XR	NO ■ YES □
	AND5 USED AS XR	NO ■ YES □
	AND6 USED AS XR	NO ■ YES □
	AND7 USED AS XR	NO ■ YES □
	AND8 USED AS XR	NO ■ YES □
	ENTRANCE GATES*	0 □ 1 □ 2 ■ 3 □ 4 □ 5 □ 6 □ 7 □ 8 □
	GATE POSITION FAIL*	20 SECS.
NOTE 8 -	BATTERY BANKS*	1 □ 2 ■ 3 □
	BATT MON USED*	NO □ YES ■
	OB RESOLUTION*	0.2 ■ 0.5 □ 1.0 □
	X-B RESOLUTION*	0.2 ■ 0.5 □ 1.0 □ NOT PRESENT □
	X-B2 RESOLUTION*	0.2 □ 0.5 □ 1.0 □ NOT PRESENT ■
	BATT MON RESOLUTION*	0.2 □ 0.5 □ 1.0 ■ NOT PRESENT □
	INTERNAL CROSSING CONTROLLERS*	0 □ 1 □ 2 ■
	EXTERNAL CROSSING CONTROLLERS*	0 ■ 1 □ 2 □
	VHF COMMUNICATOR*	YES ■ NO □
	DTMF ACTVATION*	YES ■ NO □
NOTE 1	ACTIVATION CODE	649
	ACTIVATION TIMEOUT	(60 SEC)
	ILOD MODULES*	0 □ 1 □ 2 ■ 3 □ 4 □
NOTE 2 -	ANY LED BULBS USED*	NO □ YES ■
	AUTO INSPECTIONS*	YES □ NO ■
	BELL SENSORS*	0 □ 1 ■ 2 □ 3 □ 4 □
NOTE 3	BELL SENSOR TSS 1*	NO □ YES ■
	BELL SENSOR TSS 2*	NO □ YES ■
	BELL SENSOR TSS 3*	NO ■ YES □
	BELL SENSOR TSS 4*	NO ■ YES □
	BELL SENSOR TSS 5*	NO ■ YES □
	BELL SENSOR TSS 6*	NO ■ YES □
	BELL SENSOR TSS 7*	NO ■ YES □
	BELL SENSOR TSS 8*	NO ■ YES □
	BELL ON*	GATES LOWERING ■ GATES MOVING □ ALWAYS □
	GFT'S	YES ■ NO □
	BATTERIES ON GFT1	1 □ 2 ■
NOTE 4 -	GATE TIP SENSORS*	YES □ NO ■
	RTU	NO ■ YES □
NOTE 5	VHF VOICE CHANNEL	1 □ 2 □ 3 □ 4 □ 5 □ 6 □ 7 □ 8 □
	VHF DATA CHANNEL	1 □ 2 □ 3 □ 4 □ 5 □ 6 □ 7 □ 8 □
	USE NON-CRITICAL FEATURE*	NO ■ YES □
	FULL APPROACH MOVE ALARMS*	ACTIVATE ■ DO NOT ACTIVATE □
	ENABLE PASSWORD	NO ■ YES □

LIT BULB COUNT ON EACH CIRCUIT	NO.	TYPE OF BULB	CURRENT READING IN AMP. AT APPROX. 10.0 V ARRAY VOLTAGE
CURRENT SENSOR (1) AE1, LAMP SET UP	7	□BULBS ■LED	9.1
CURRENT SENSOR (1) AE2, LAMP SET UP	7	□BULBS ■LED	9.1
CURRENT SENSOR (2) BE1, LAMP SET UP	7	□BULBS ■LED	9.1
CURRENT SENSOR (2) BE2, LAMP SET UP	7	□BULBS ■LED	9.1

VHF RADIO CHANNELS			
1	161.130	5	161.550
2	160.710	6	160.785
3	160.560	7	160.785
4	160.860	8	160.785

NOTES,

1. OPTION AVAILABLE IF VHF COMMUNICATOR = YES LAST 3 DIGITS OF DOT NUMBER.
2. OPTION AVAILABLE IF ILODS.
3. OPTION AVAILABLE IF BELL SENSORS.
4. OPTION AVAILABLE IF GATES.
5. OPTION AVAILABLE IF VHF RADIO.
6. ONLY YES IN SPECIAL CIRCUMSTANCES.
7. SELECT "MENU" THEN "CONFIGURATION" FROM SEAR II INTERFACE KEYPAD TO ACCESS MODULE CONFIGURATION MENU.
8. BATTERY BANKS* = NUMBER OF BANKS EXCLUDING THE BANK APPLIED TO THE BAT MON SEAR INPUT
9. YES ON INITIAL SETUP

NOTE 7

MENU ⟶ CONFIGURATION ⟶	
MODULES ⟶ ADD MODULE	
MODULE TYPE	WAG
MODULE NAME	DEFAULT
WAG ECHELON NODE	7

NOTE,
REFER TO WAG INSTALLATION AND SETUP IN APPENDIX "A" GCP4000 SYTEM CUT OVER, TEST PROCEDURE AND CHECK OFF SHEET.

MEASURE BATTERY VOLTAGE AT INPUT			
BATTERY VOLTAGE	OB	12	VOLTS
BATTERY VOLTAGE	X-B	13	VOLTS
BATTERY VOLTAGE	B-G	14	VOLTS

NOTE 6

PROGRAM MENU SELECT		
EDIT DIGITAL INPUTS	■ NO	□ YES
EDIT BATTERIES	■ NO	□ YES
EDIT RELAYS	■ NO	□ YES
EDIT TEST LED'S	■ NO	□ YES
EDIT ILOD1 SENSOR ☆	■ NO	□ YES
EDIT ILOD2 SENSOR ☆	■ NO	□ YES
EDIT ILOD3 SENSOR ☆	■ NO	□ YES
EDIT ILOD4 SENSOR ☆	■ NO	□ YES
EDIT VHF SETTINGS	■ NO	□ YES
GCP4K ATCS SUBNODE	16	

☆STAR = OPTIONS SHOWN DEPENDANT ON NUMBER OF ILODS SELECTED

CSX TRANSPORTATION
RAIL TRANSPORT GROUP ENGINEERING
COMMUNICATIONS AND SIGNALS

BURNHAM AVENUE 163649L

SEAR II1 CONFIGURATION & FUNCTIONS
BURNHAM, IL M.P. BID-1.07

4000GCP.C07
REV. 07-31-09

DESIGNED	DIGITIZED	CHECKED	DATE
XRL/KSB	XRL/KSB	XRL	07-04-14

DESIGN DATE	REV. NO.	DRAWING	SHEET NO	FILE	SHEET
07-04-14	1	-----	-----	BID00107	C09

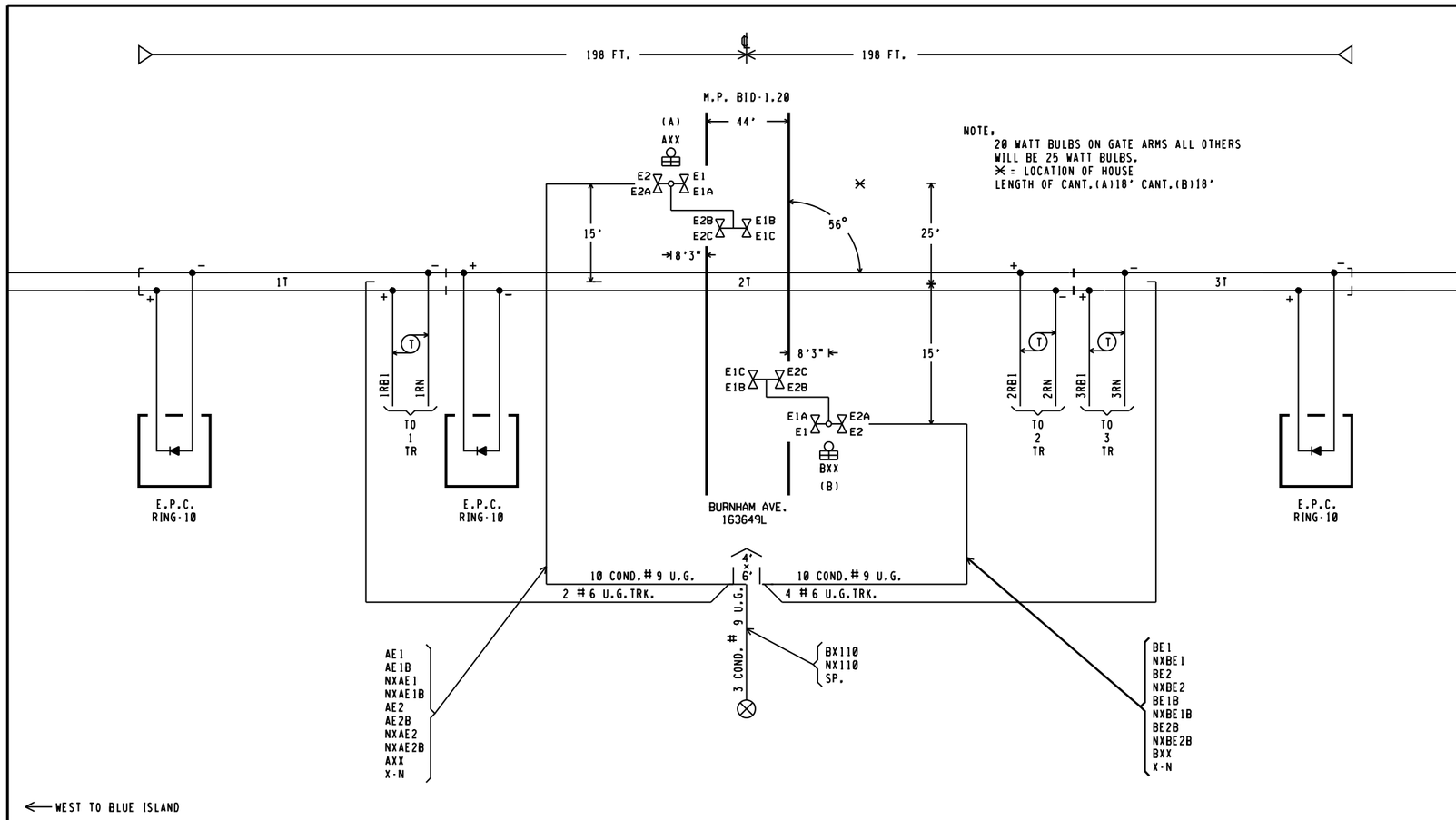

NOTE,
20 WATT BULBS ON GATE ARMS ALL OTHERS
WILL BE 25 WATT BULBS.
✕ = LOCATION OF HOUSE
LENGTH OF CANT.(A)18' CANT.(B)18'

REVISIONS

6-15-95 SAF IL92039

ALL OUT
THIS SHEET IS VOID
WHEN AS IN SERVICED.

CXD1436268 IL2012037A
07-04-14 XRL/S.BABU/

xorail

CSX TRANSPORTATION
RAIL TRANSPORT GROUP ENGINEERING
COMMUNICATIONS AND SIGNALS

BURNHAM, IL.

TRACK AND SIGNAL PLAN
BURNHAM AVENUE 163649L M.P. BID-1.20

DESIGNED	DIGITIZED	CHECKED	DATE
SAFETRAN	SAFETRAN	SAFETRAN	1-11-91

DRAWING	SHEET NO	NEXT SH	NEXT FILE	NEXT SH	FILE	SHEET
			BID00120	E01	BID00120	S01

TOP ROW

1TR			2TR			3TR			1SR			3SR			XR			XMCSR						EOR			POR		
12	FB	B51	12	F	B51	12	FB	B51	12	B	B8	12	B	B8	12	B	B77	12		B8				12	FB	B81	12	FB	B62
15	B	C30	15	F	C30	15	B	C30	15		C30	15		C30	15	B	C30	15		C30				15	FB	C30	15	FB	C30
22			22	B		22			22	B		22	B		22	B		22						32	FB		22	FB	
23	F		23	F		23	F		23	F		23	F		23			23	F					35	FB		25	FB	
25	F		25	F		25	F		25	F		25	F		25	B		25	F								32	FB	
32			32			32			32			32			32	B		32									35	FB	
35			35			35			35			35			35	B		35											

EQUIPMENT		
REF.	NOMENCLATURE	TYPE
	1-2-3TG	GENERATOR,ELECTRO PNEUMATIC CORP.ACG-2T
	1TD	TRACK DRIVER, ELECTRO PNEUMATIC CORP. TD-1A
	2TD	" "
	3TD	" "
	DSRT	DUAL STICK RELEASE TIMER, MODERN IND. 8035-21

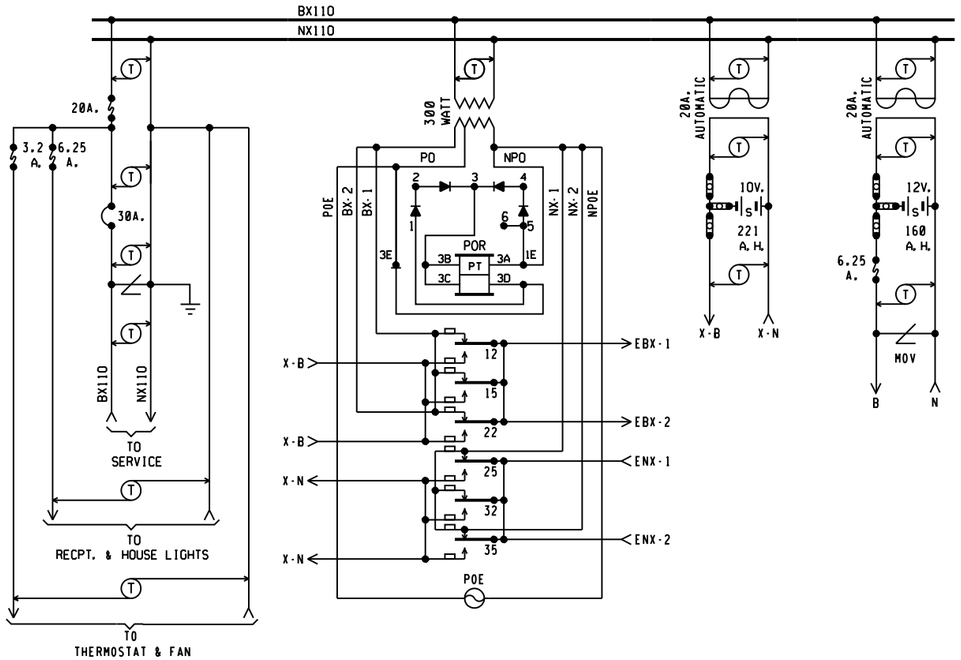

NOTES:

1 - REFERENCES ARE PER SCMS-13.
2 - ARRESTERS ARE PER SCMS-22.
3 - GROUND CONNECTIONS ARE PER SCMS-18.
4 - SHELF RELAY PLACEMENT ON CONSIST CHART HAS NO SIGNIFICANCE.
5 - PLUG-IN RELAYS ARE VIEWED FROM THE FRONT OF RACK.
6 - ALL FUSES TO BE SLOW BLOW.
7 - WIRING
  A - FEED TO ALL BUSSES, LIGHT CIRCUITS,MOTOR CIRCUITS AND 110-VOLT FEED FROM ENTRANCE TO POWER BUSS, TO BE #10 FLEX.
  B - FROM POWER BUSS TO RECTIFIER AND TRANSFORMER TO BE #14 FLEX.
  C - ALL OTHERS TO BE #16 FLEX UNLESS NOTED.

4' X 6' RELAY HOUSE

ALL OUT
THIS SHEET IS VOID
WHEN AS IN SERVICED.
CXD1436268 IL2012037A
07-04-14 XRL/S.BABU/
xorail

REVISIONS
6-15-95 SAF IL92039

CSX TRANSPORTATION
RAIL TRANSPORT GROUP ENGINEERING
COMMUNICATIONS AND SIGNALS

BURNHAM, IL.

EQUIPMENT AT
BURNHAM AVENUE 163649L M.P. BID-1.20

DESIGNED	DIGITIZED	CHECKED	DATE
SAFETRAN	SAFETRAN	SAFETRAN	1-11-91

DRAWING	SHEET NO	NEXT SH	NEXT FILE	NEXT SH	FILE	SHEET
			BID00120	C01	BID00120	E01

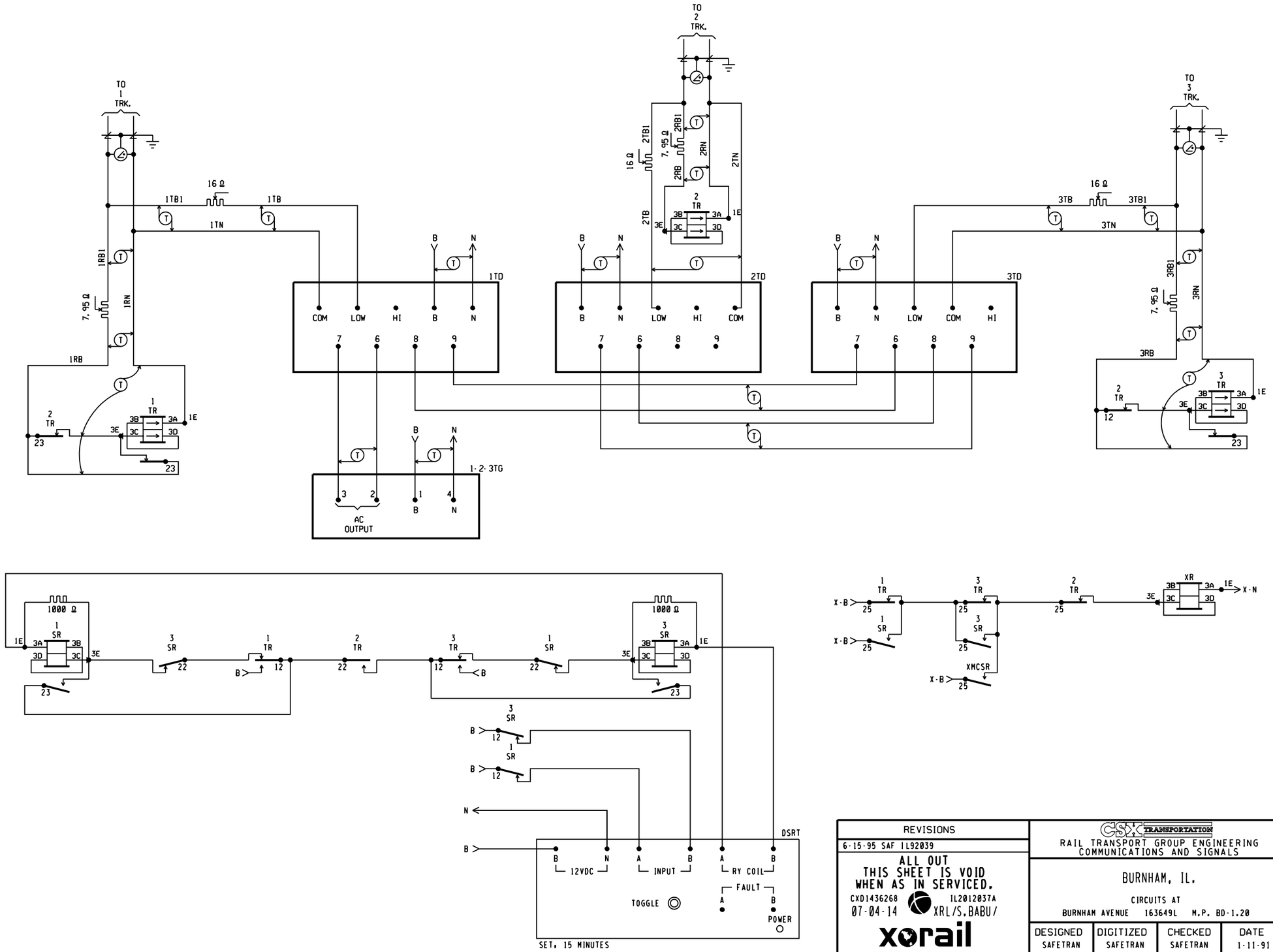

REVISIONS
6-15-95 SAF IL92039

ALL OUT
THIS SHEET IS VOID
WHEN AS IN SERVICED.

CXD1436268 IL2012037A
07-04-14 XRL/S.BABU/

xorail

CSX TRANSPORTATION
RAIL TRANSPORT GROUP ENGINEERING
COMMUNICATIONS AND SIGNALS

BURNHAM, IL.

CIRCUITS AT
BURNHAM AVENUE 163649L M.P. BD-1.20

DESIGNED	DIGITIZED	CHECKED	DATE
SAFETRAN	SAFETRAN	SAFETRAN	1-11-91

DRAWING	SHEET NO	NEXT SH	NEXT FILE	NEXT SH	FILE	SHEET
			BID00120	C02	BID00120	C01

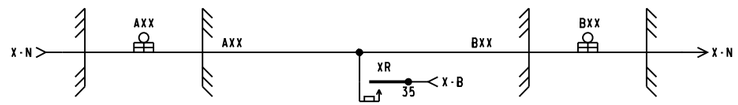

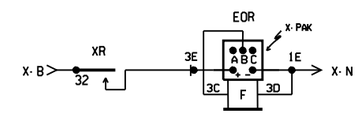

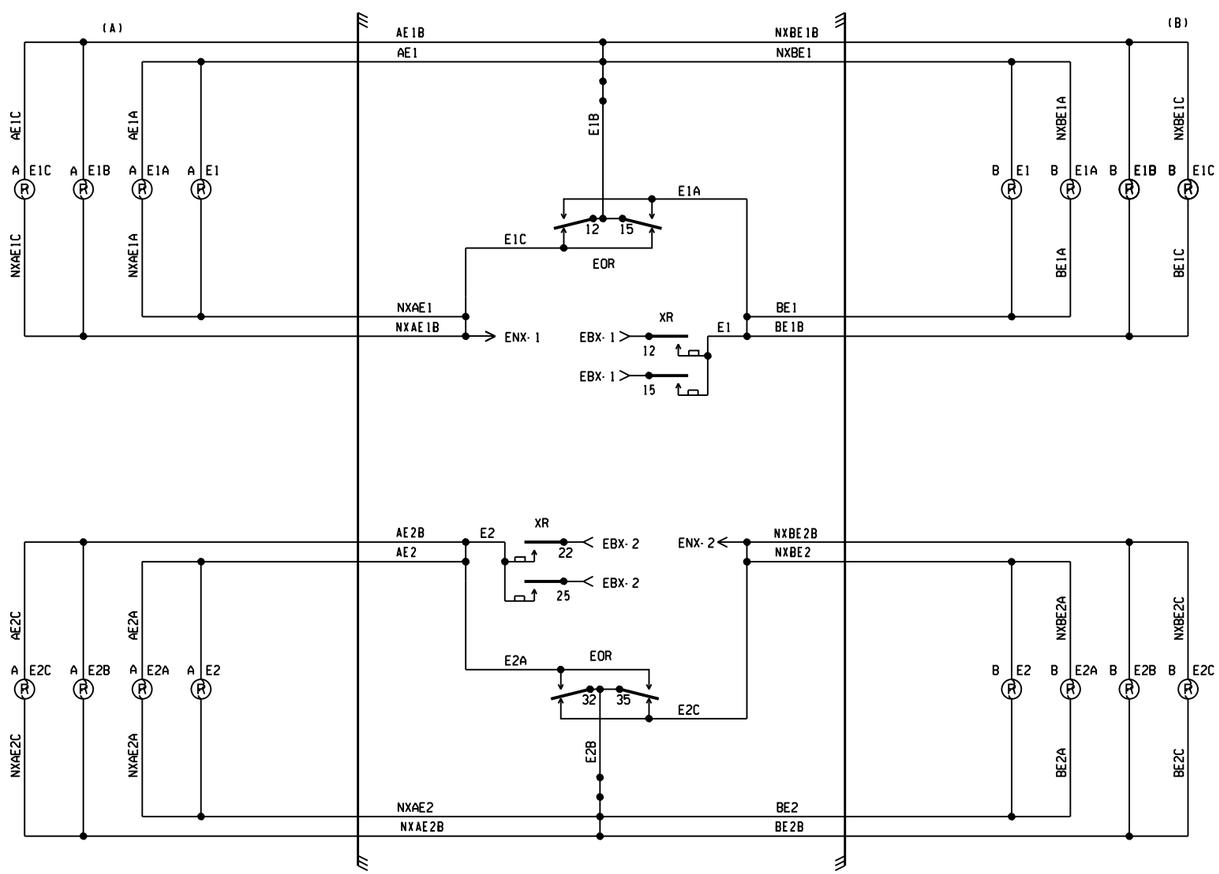

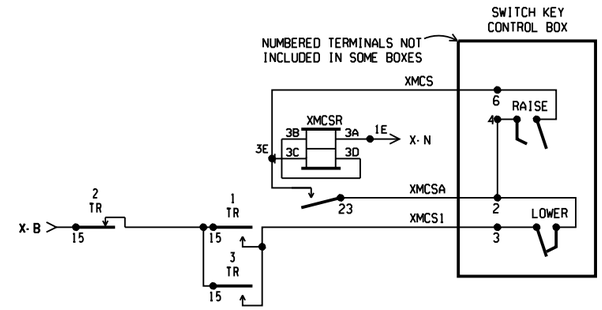

ALL OUT
THIS SHEET IS VOID
WHEN AS IN SERVICED.

CXD1436268 IL2012037A
07-04-14 XRL/S.BABU/

xorail

REVISIONS
6-15-95 SAF IL92039

CSX TRANSPORTATION
RAIL TRANSPORT GROUP ENGINEERING
COMMUNICATIONS AND SIGNALS

BURNHAM, IL.

CIRCUITS AT
BURNHAM AVENUE 163649L M.P. BID-1.20

DESIGNED	DIGITIZED	CHECKED	DATE
SAFETRAN	SAFETRAN	SAFETRAN	1-11-91

DRAWING	SHEET NO	NEXT SH	NEXT FILE	NEXT SH	FILE	SHEET
					BID00120	C02