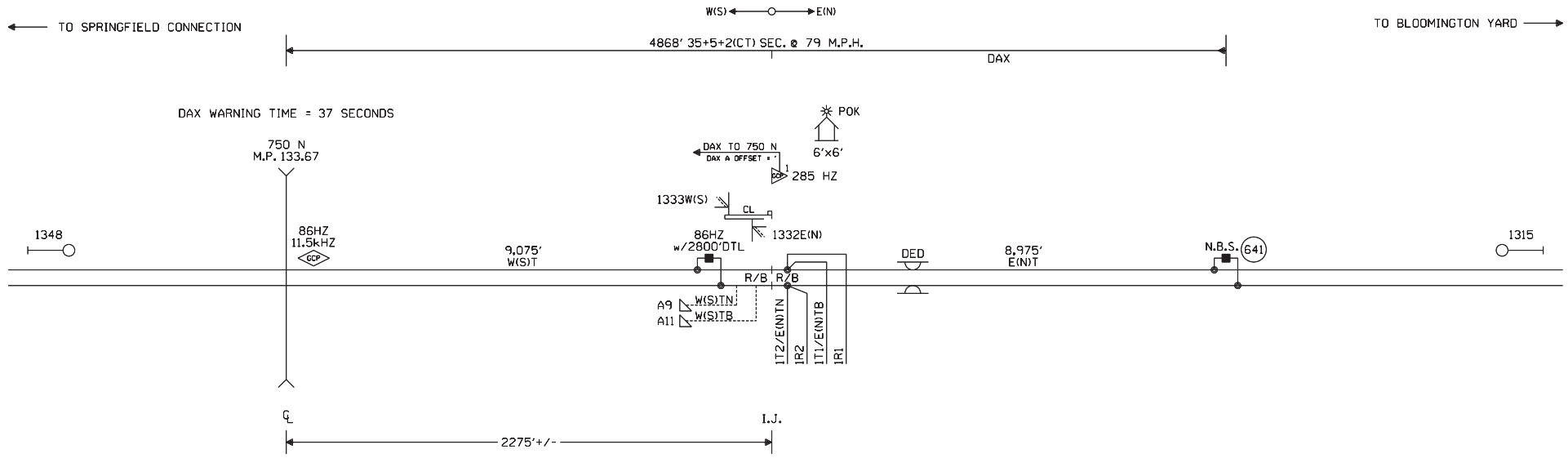

NOTES:

⊗ = TWISTED WIRES

⊘ = OBSERVE CORRECT POLARITY. EQUIPMENT WILL BE DAMAGED IF CONNECTIONS ARE REVERSED

ALL WIRING TO TRACK 2C. NO.6 U.G.B.T. CABLE UNLESS OTHERWISE SPECIFIED.

ALL CASE WIRING TO BE NO.16 UNLESS OTHERWISE SPECIFIED.

ALL GROUND CONNECTIONS TO BE #6 OR LARGER, SIGNAL WIRING SHOP TO RUN ALL GROUND CONNECTIONS.

ENSURE TRACK POLARITY IS TRANSPOSED ACROSS ALL INSULATED JOINTS.

⧖ = TEST TERMINALS MUST BE INSTALLED ON ALL WIRING CONNECTED TO EXTERNAL CABLES (EXCEPT TRACK AND A.C. POWER WIRES).

SHOW ACTUAL DED INSTALLED LOCATION ON DRAWING.

USE TAB 310 WITH MICROTRAX AND NO CABS.

PORTABLE GENERATOR EXTENSION CORD FOR 240V TO 240V IS PROVIDED AS WELL AS A 120V TO 240V ADAPTER.

CONNECTS TO M.P. 133.67

CONNECTS TO M.P. 131.55

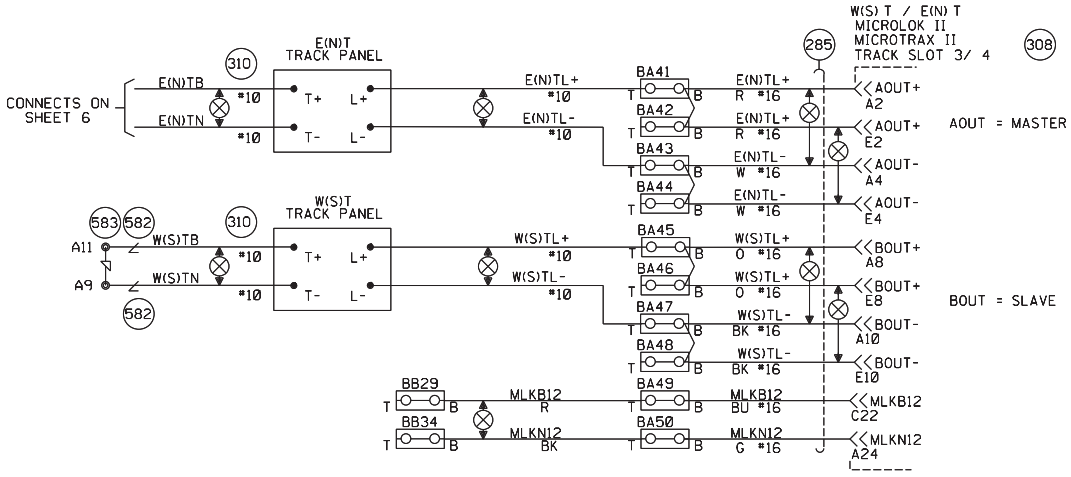

NEW SHEET

Designed: 4/3/13 TIER 4 ILLINOIS HIGH SPEED RAIL PROJECT PHASE 2 MP 124.85-134.90 Rec#: WO#: 22816 IS: /MWK /WIT /MJF	MODIFICATION LEVEL		CIRCUIT MODIFICATIONS ARE NOT TO BE MADE WITHOUT AUTHORITY FROM THE OFFICE OF SIGNAL DESIGN	Date: 4/3/13 Des: WIT Chk: MWK PID: 85684 AFE: 22816	UNION PACIFIC RAILROAD INTERMEDIATE SIGNAL SPRINGFIELD SUBDIVISION Office of AVP Engineering - Signal Omaha, Nebraska	Sh.: 1 MP: 133.25 ID: CSL13325.1S
	Q.A. LAST LEVEL CHECKED	DU				
	LAST LEVEL MOD THIS TYPICAL	DU				
	LAST LEVEL BY DESIGNER	DU				
	CHANGED FROM TYPICAL?	Y				
	REV 8/20/10 1TMLHBINTU.1					

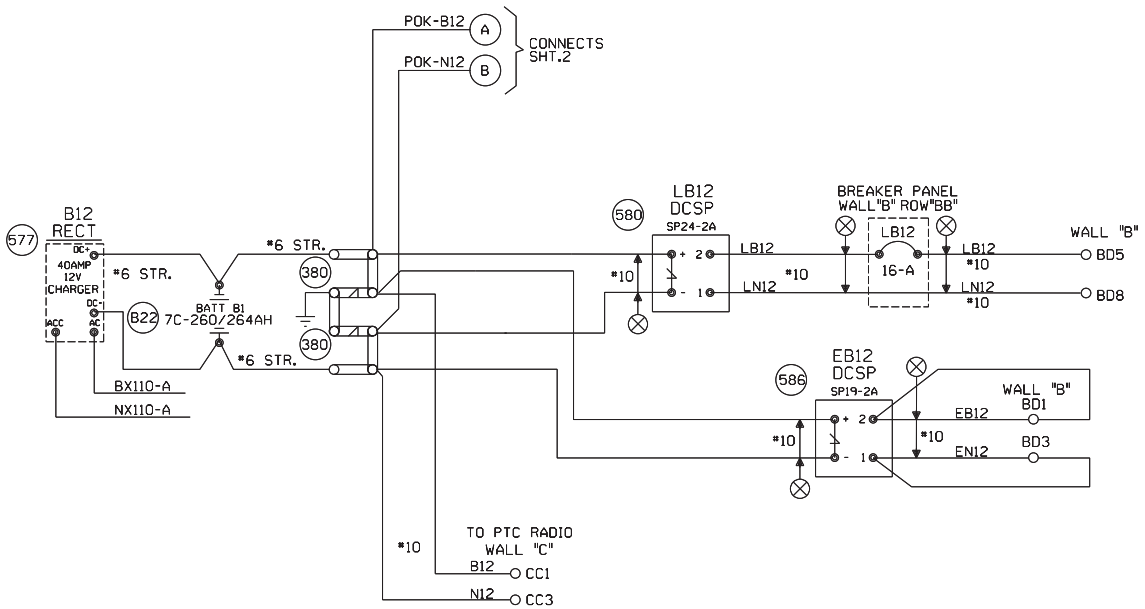

CABLE TABULATION

CABLE NO.1-5C.N0.6 HSE. TO SIGNAL W(S)A
CABLE NO.2-5C.N0.6 HSE. TO SIGNAL E(N)A
CABLE NO.3-7C.NO.14 HSE. TO M.P. 120.03

NEW SHEET

					Designed: 4/3/13 TIER 4 ILLINOIS HIGH SPEED RAIL PROJECT PHASE 2 MP 124.85-134.90 Rec#: WO#: 22816 IS: /MWK / /WIT/MJF	MODIFICATION LEVEL		CIRCUIT MODIFICATIONS ARE NOT TO BE MADE WITHOUT AUTHORITY FROM THE OFFICE OF SIGNAL DESIGN	Date: 4/3/13 Des: WIT Chk: MWK PID: 85684 AFE: 22816	UNION PACIFIC RAILROAD INTERMEDIATE SIGNAL SPRINGFIELD SUBDIVISION Office of AVP Engineering - Signal Omaha, Nebraska	Sh.: 1A MP: 133.25 ID: CSL13325.1AS
						Q.A. LAST LEVEL CHECKED	DU				
						LAST LEVEL MOD THIS TYPICAL	DU				
						LAST LEVEL BY DESIGNER	DU				
						CHANGED FROM TYPICAL? REV 10/3/13 1TMLHBINT.1AS.DGN	Y				

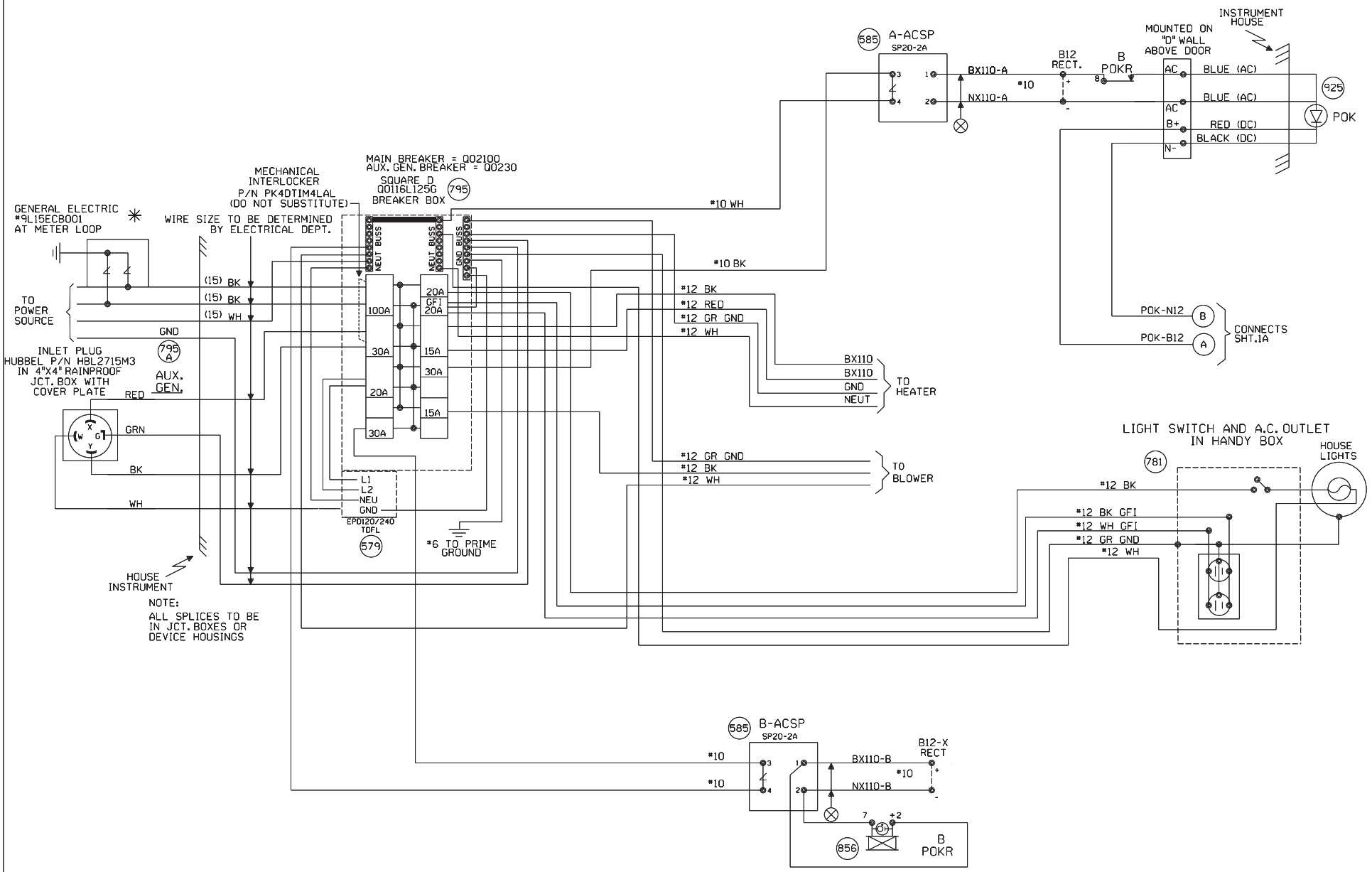

NEW SHEET

Designed: 4/3/13 TIER 4 ILLINOIS HIGH SPEED RAIL PROJECT PHASE 2 MP 124.85-134.90 Rec#: WO#: 22816 IS: /MWK /WIT/MJF	MODIFICATION LEVEL		CIRCUIT MODIFICATIONS ARE NOT TO BE MADE WITHOUT AUTHORITY FROM THE OFFICE OF SIGNAL DESIGN	Date: 4/3/13 Des: WIT Chk: MWK PID: 85684 AFE: 22816	UNION PACIFIC RAILROAD INTERMEDIATE SIGNAL SPRINGFIELD SUBDIVISION Office of AVP Engineering - Signal Omaha, Nebraska	Sh.: 2 MP: 133.25 ID: CSL13325.2S
	Q.A. LAST LEVEL CHECKED	DU				
	LAST LEVEL MOD THIS TYPICAL	DU				
	LAST LEVEL BY DESIGNER	DU				
	CHANGED FROM TYPICAL?	Y				
	Rev 10/3/13 1TMLHBINT.2S.DGN					

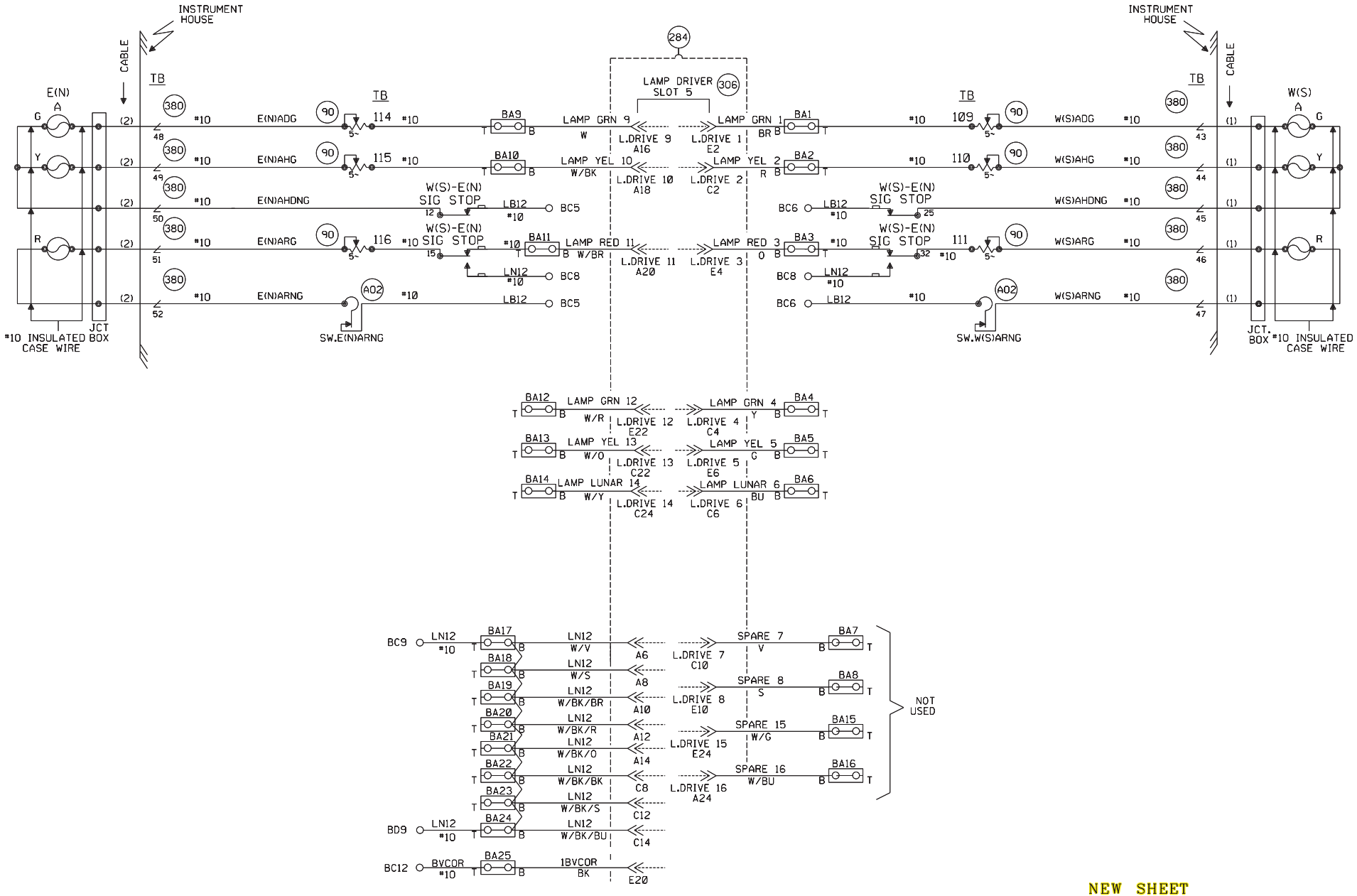

NEW SHEET

Designed: 4/3/13 TIER 4 ILLINOIS HIGH SPEED RAIL PROJECT PHASE 2 MP 124.85-134.90 Rec#: WO#: 22816 IS: /MWK / / WIT/MJF	MODIFICATION LEVEL		CIRCUIT MODIFICATIONS ARE NOT TO BE MADE WITHOUT AUTHORITY FROM THE OFFICE OF SIGNAL DESIGN	Date: 4/3/13 Des: WIT Chk: MWK PID: 85684 AFE: 22816	UNION PACIFIC RAILROAD INTERMEDIATE SIGNAL SPRINGFIELD SUBDIVISION Office of AVP Engineering - Signal Omaha, Nebraska	Sh.: 3 MP: 133.25 ID: CSL13325.3S
	Q.A. LAST LEVEL CHECKED	DU				
	LAST LEVEL MOD THIS TYPICAL	DU				
	LAST LEVEL BY DESIGNER	DU				
	CHANGED FROM TYPICAL?	Y				
	REV 8/20/10 1TMLHBINTUGS.3					

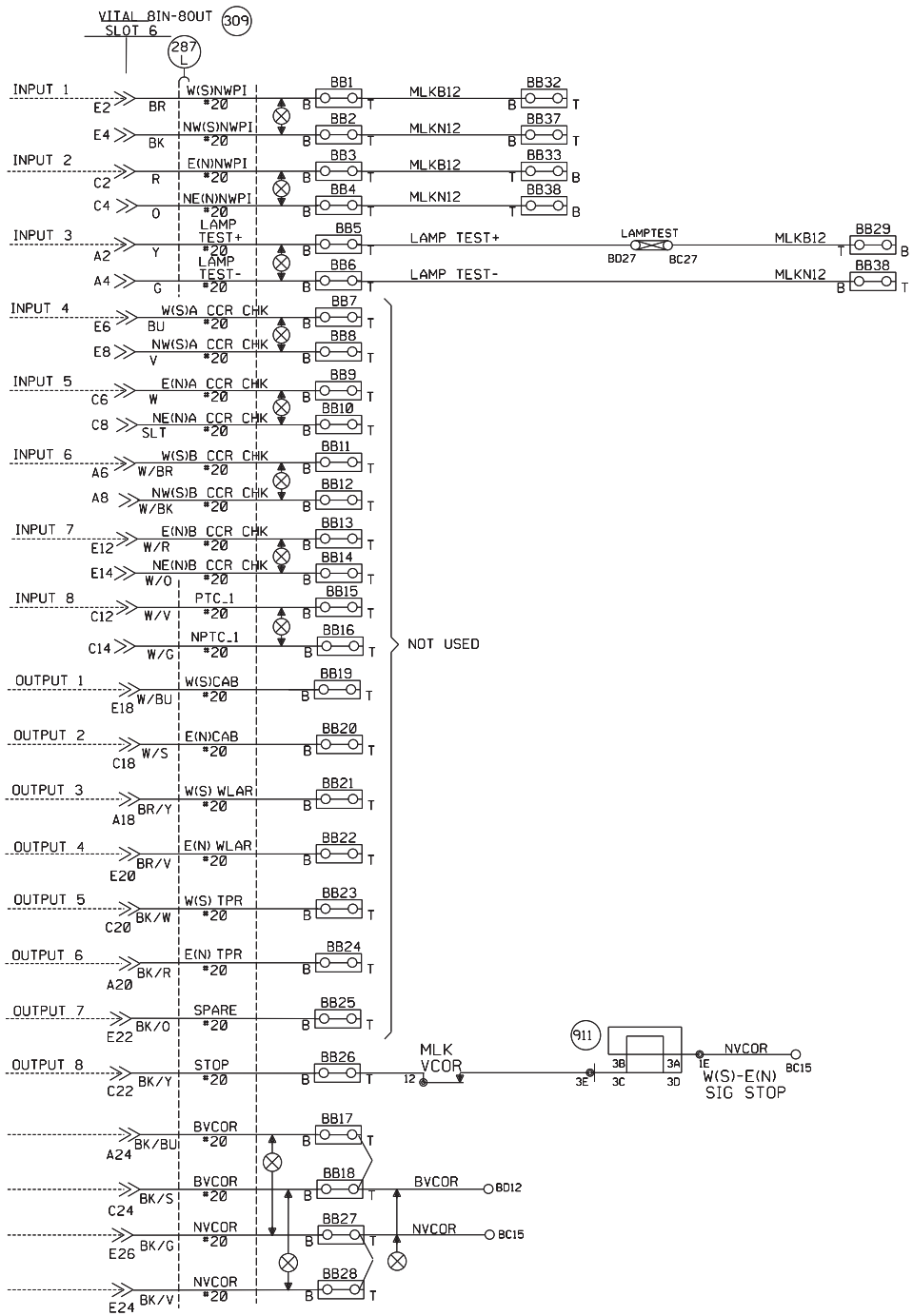

NEW SHEET

Designed: 4/3/13 TIER 4 ILLINOIS HIGH SPEED RAIL PROJECT PHASE 2 MP 124.85-134.90 Rec#: WO#: 22816 IS: /MWK / / WIT/MJF	MODIFICATION LEVEL		CIRCUIT MODIFICATIONS ARE NOT TO BE MADE WITHOUT AUTHORITY FROM THE OFFICE OF SIGNAL DESIGN	Date: 4/3/13 Des: WIT Chk: MWK PID: 85684 AFE: 22816	UNION PACIFIC RAILROAD INTERMEDIATE SIGNAL SPRINGFIELD SUBDIVISION Office of AVP Engineering - Signal Omaha, Nebraska	Sh.: 3A MP: 133.25 ID: CSL13325.3AS
	Q.A. LAST LEVEL CHECKED	DU				
	LAST LEVEL MOD THIS TYPICAL	DU				
	LAST LEVEL BY DESIGNER	DU				
	CHANGED FROM TYPICAL? REV 8/20/10 1TMLHBINTU.3A	Y				

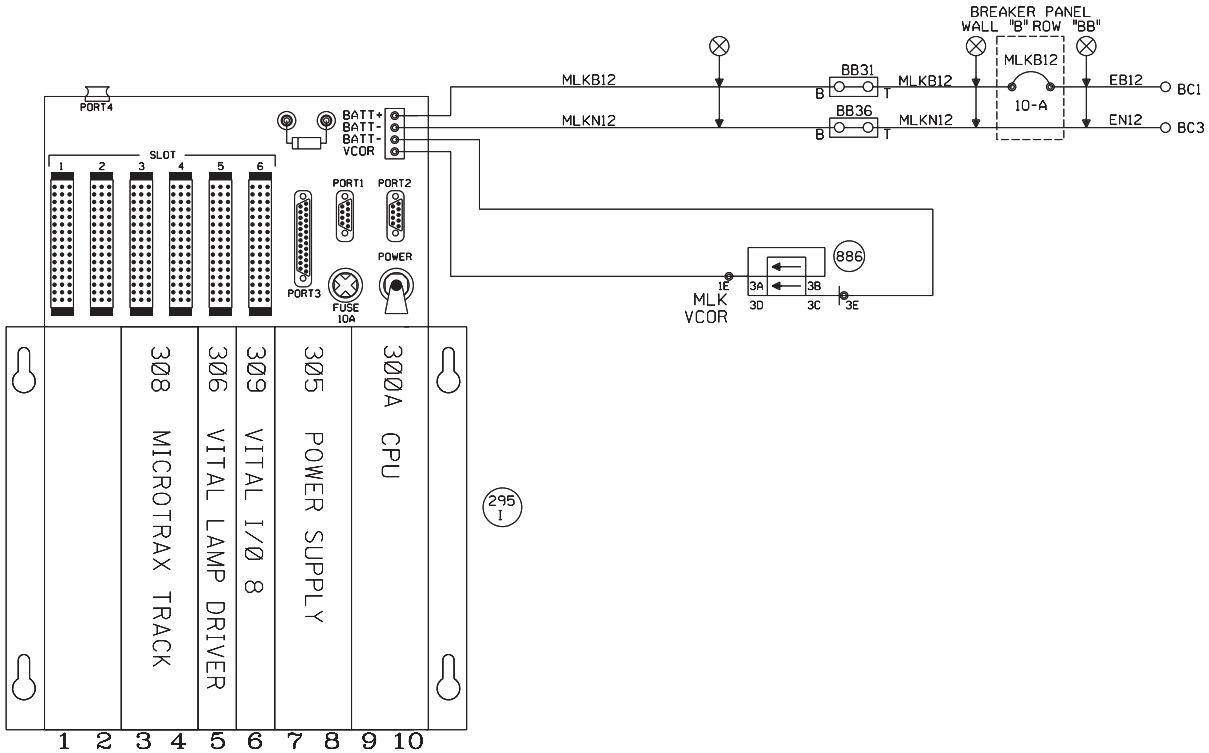

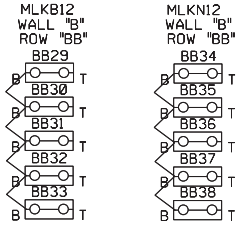

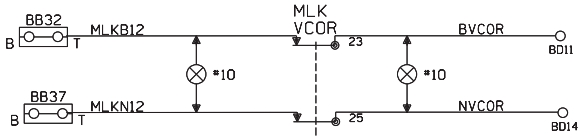

NEW SHEET

					Designed: 4/3/13 TIER 4 ILLINOIS HIGH SPEED RAIL PROJECT PHASE 2 MP 124.85-134.90 Rec#: WO#: 22816 IS: /MWK / WIT/MJF	MODIFICATION LEVEL Q.A. LAST LEVEL CHECKED DU LAST LEVEL MOD THIS TYPICAL DU LAST LEVEL BY DESIGNER DU CHANGED FROM TYPICAL? Y REV 8/20/10 1TMLHBINTU.4	CIRCUIT MODIFICATIONS ARE NOT TO BE MADE WITHOUT AUTHORITY FROM THE OFFICE OF SIGNAL DESIGN	Date: 4/3/13 Des: WIT Chk: MWK PID: 85684 AFE: 22816	UNION PACIFIC RAILROAD INTERMEDIATE SIGNAL SPRINGFIELD SUBDIVISION Office of AVP Engineering - Signal Omaha, Nebraska	Sh.: 4 MP: 133.25 ID: CSL13325.4S

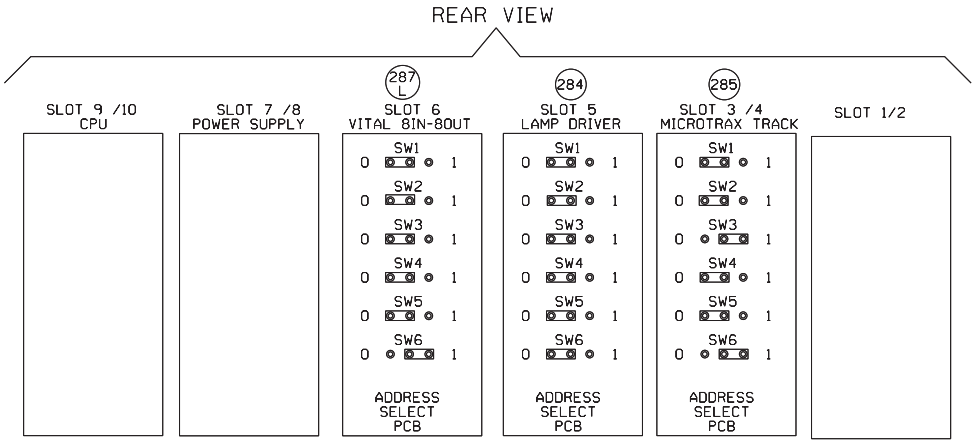

NOTE: FOR PTC COMPATIBLE CPU JUMPER SETTINGS REFER TO ANSALDO MANUAL 1D1.0028 PAGE 1-26 1-27 1-28 REV. 1 DATE 8/2009

FOR STANDARD CPU JUMPER SETTINGS REFER TO ANSALDO MANUAL SM-6800B PAGE 2-12, 2-13 REV.2.5 DATE 9/2000

IF BOX CHECKED SET APPROPRIATE PROG. ID

ML8UCCB REV N

15 SEC SLOW PICK ET TO PREVENT JOINT HOP		USE WHEN INTERFACING MICRO-ECODE TO GETS ECODE
15 SEC SLOW PICK WT TO PREVENT JOINT HOP		USE WHEN INTERFACING MICRO-ECODE TO GETS ECODE
DISABLE DBFY EAST ?	X	(SET PROG ID 1)
DISABLE DBFY WEST ?	X	(SET PROG ID 2)
PROGRAM ID 1 (BINARY 1)	X	
PROGRAM ID 2 (BINARY 2)	X	
PROGRAM ID 3 (BINARY 4)		(MUST BE CLEAR)
PROGRAM ID 4 (BINARY 8)		(MUST BE CLEAR)
PROGRAM ID 5 (BINARY 16)		(MUST BE CLEAR)
PROGRAM ID 6 (BINARY 32)		(MUST BE CLEAR)
PROGRAM ID 7 (BINARY 64)		(SET TO DISABLE VIO8 CAB)
PROGRAM ID 8 (BINARY 128)	X	(MUST BE SET)
PROGRAM ID 9 (BINARY 256)		(SET TO DISABLE INCAND. SIG BOARD)
PROGRAM ID 10 (BINARY 512)	X	(SET TO DISABLE LED SIG BOARD)
PROGRAM ID 11 (BINARY 1024)		
PROGRAM ID 12 (BINARY 2048)		
PROGRAM ID 13 (BINARY 4096)		
PROGRAM ID 14 (BINARY 8192)		
PROGRAM ID 15 (BINARY 16384)		
PROGRAM ID 16 (BINARY 32768)		
WEST TK UP SEND C5 EAST	X	
REC C5 W TK SEND C5 EAST		
EAST TK UP SEND C5 WEST	X	
REC C5 E TK SEND C5 WEST		
SET IF W(S) "B" FLASHING RED		(SET PROG ID 11)
SET IF W(S) "B" LUNAR		(SET PROG ID 12)
SET IF W(S) "B" YELLOW		(SET PROG ID 13)
SET IF E(N) "B" FLASHING RED		(SET PROG ID 14)
SET IF E(N) "B" LUNAR		(SET PROG ID 15)
SET IF E(N) "B" YELLOW		(SET PROG ID 16)
E(N) C5 APPLIT	X	(ENABLE APPLIT W(S) SIG W/LOSS OF C5)
W(S) C5 APPLIT	X	(ENABLE APPLIT E(N) SIG W/LOSS OF C5)

NEW SHEET

Designed: 4/3/13
TIER 4 ILLINOIS HIGH SPEED RAIL PROJECT
PHASE 2
MP 124.85-134.90
Rec#: WO#: 22816
IS: /MWK
/ WIT/MJF

MODIFICATION LEVEL	
Q. A. LAST LEVEL CHECKED	DU
LAST LEVEL MOD THIS TYPICAL	DU
LAST LEVEL BY DESIGNER	DU
CHANGED FROM TYPICAL?	Y

rev 8/20/10 1TMLHBINTU.5

CIRCUIT MODIFICATIONS ARE NOT TO BE MADE WITHOUT AUTHORITY FROM THE OFFICE OF SIGNAL DESIGN

Date: 4/3/13
Des: WIT Chk: MWK
PID: 85684
AFE: 22816

UNION PACIFIC RAILROAD

INTERMEDIATE SIGNAL
SPRINGFIELD SUBDIVISION

Office of AVP Engineering - Signal Omaha, Nebraska

Sh.: 5
MP: 133.25
ID: CSL13325.5S

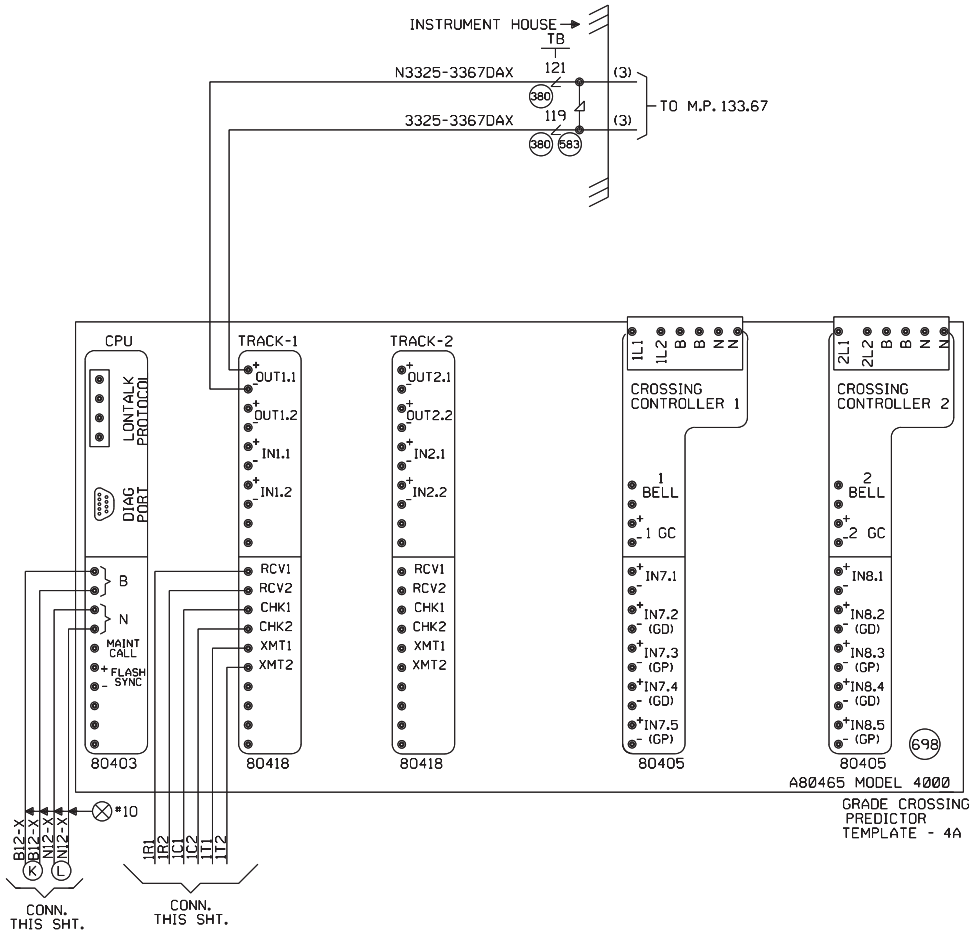

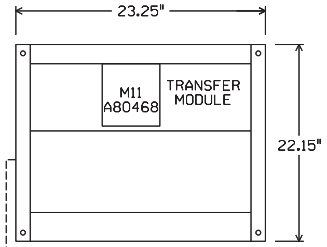

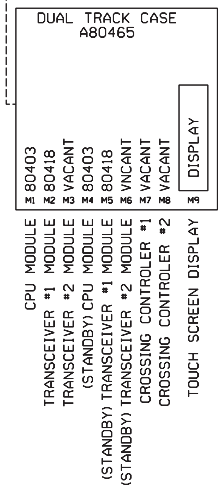

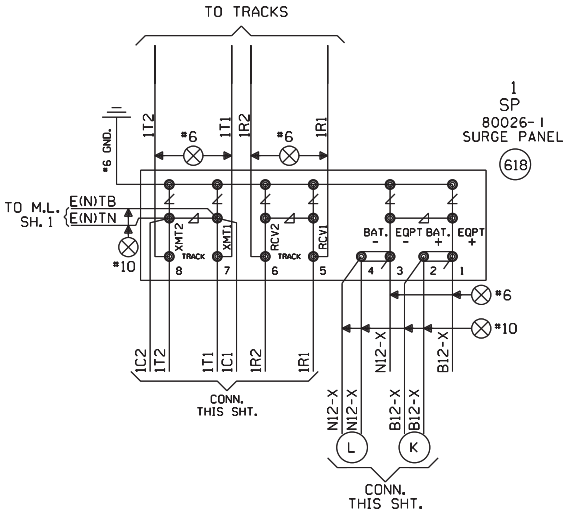

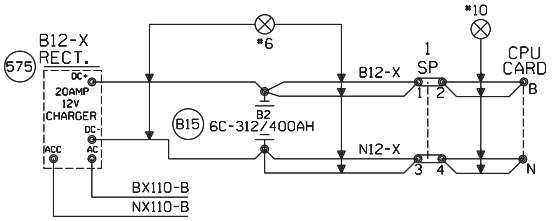

"Mf" FREQUENCY (HZ)	MAXIMUM TRANSMIT WIRE LENGTH (FEET)
86	100
114	125
156	150
211	200
285-970	250

NOTE:
EACH TRANSMITTER TO RAIL WIRE FROM XMT1 AND XMT2 MUST NOT EXCEED THE MAXIMUM LENGTH SPECIFIED IN THE TABLE SHOWN. THE RECEIVER LENGTH IS NOT CRITICAL. DOES NOT APPLY TO 6 TRACK WIRE APPLICATION.

NEW SHEET

Designed: 4/3/13
TIER 4 ILLINOIS HIGH SPEED RAIL PROJECT
PHASE 2
MP 124.85-134.90
Rec#: WO#: 22816
15: MWK
WIT/MJF
Rev 01.24.11 4K 2TKGF.3

MODIFICATION LEVEL	
O.A. LAST LEVEL CHECKED	DU
LAST LEVEL MOD THIS TYPICAL	DU
LAST LEVEL BY DESIGNER	DU
CHANGED FROM TYPICAL?	Y

CIRCUIT MODIFICATIONS ARE NOT TO BE MADE WITHOUT AUTHORITY FROM THE OFFICE OF SIGNAL DESIGN

Date: 4/3/13
Des: WIT Chk: MWK
PID: 85684
AFE: 22816

UNION PACIFIC RAILROAD

INTERMEDIATE SIGNAL
SPRINGFIELD SUBDIVISION

Office of AVP Engineering - Signal Omaha, Nebraska

Sh.: 6
MP: 133.25
ID: CSL13325.6X

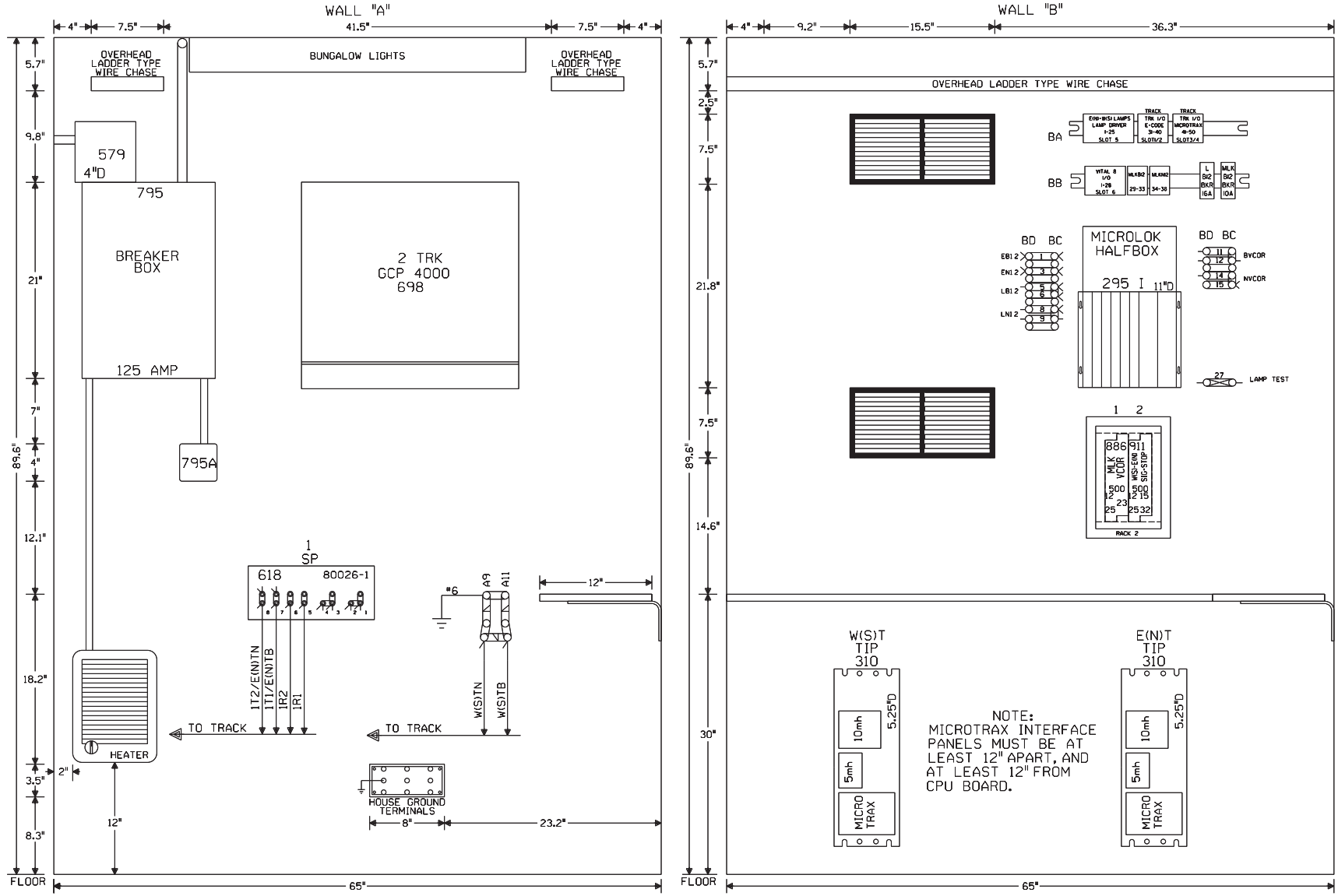

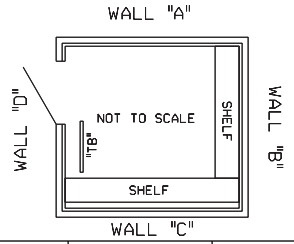

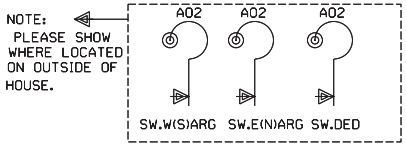

NOTE: ALL DIMENSIONS SHOWN ARE APPROXIMATE.

6X6 HOUSE WITH HEATER AND BLOWER U.P. PART#520-2529

NEW SHEET

Designed: 4/3/13 TIER 4 ILLINOIS HIGH SPEED RAIL PROJECT PHASE 2 MP 124.85-134.90 Rec#: WO#: 22816 IS: /MWK /WIT/MJF	CIRCUIT MODIFICATIONS ARE NOT TO BE MADE WITHOUT AUTHORITY FROM THE OFFICE OF SIGNAL DESIGN	Date: 4/3/13 Des: WIT Chk: MWK PID: 85684 AFE: 22816	UNION PACIFIC RAILROAD INTERMEDIATE SIGNAL SPRINGFIELD SUBDIVISION Office of AVP Engineering - Signal Omaha, Nebraska	Sh.: 7 MP: 133.25 ID: CSL13325.7S	

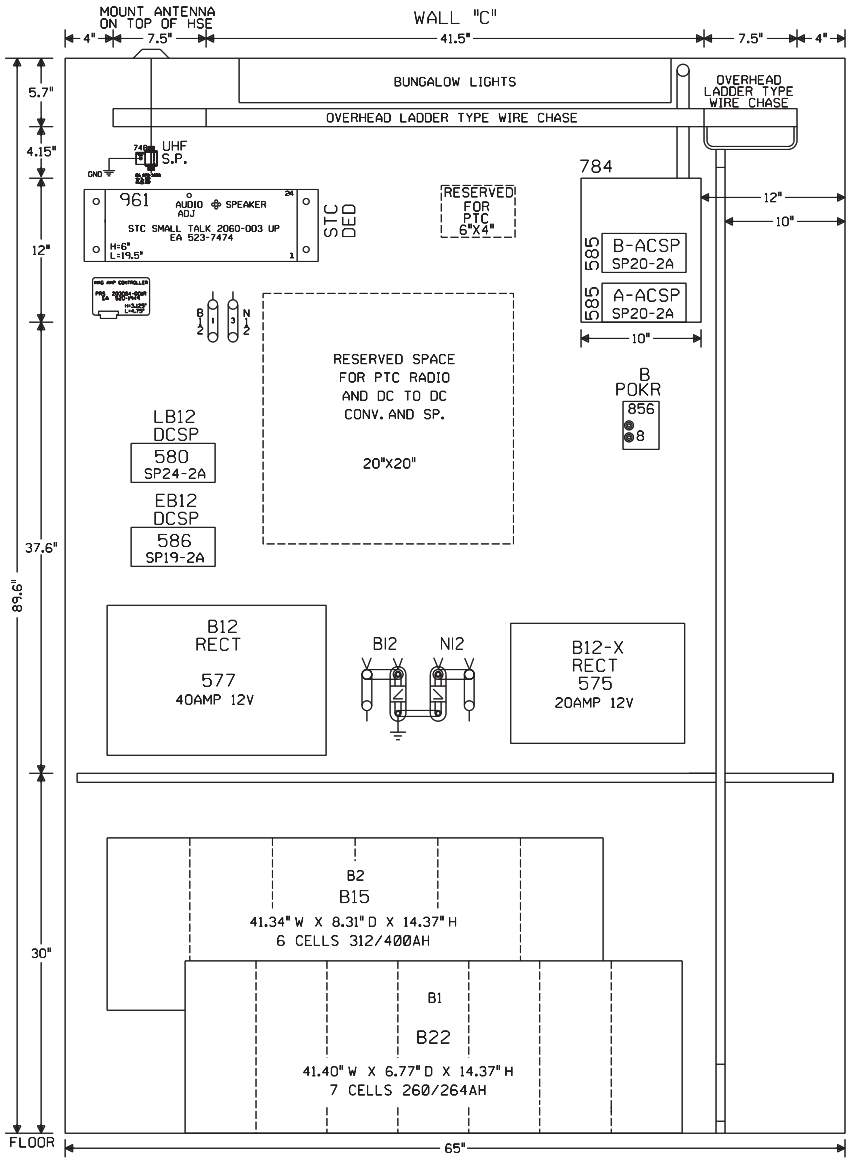

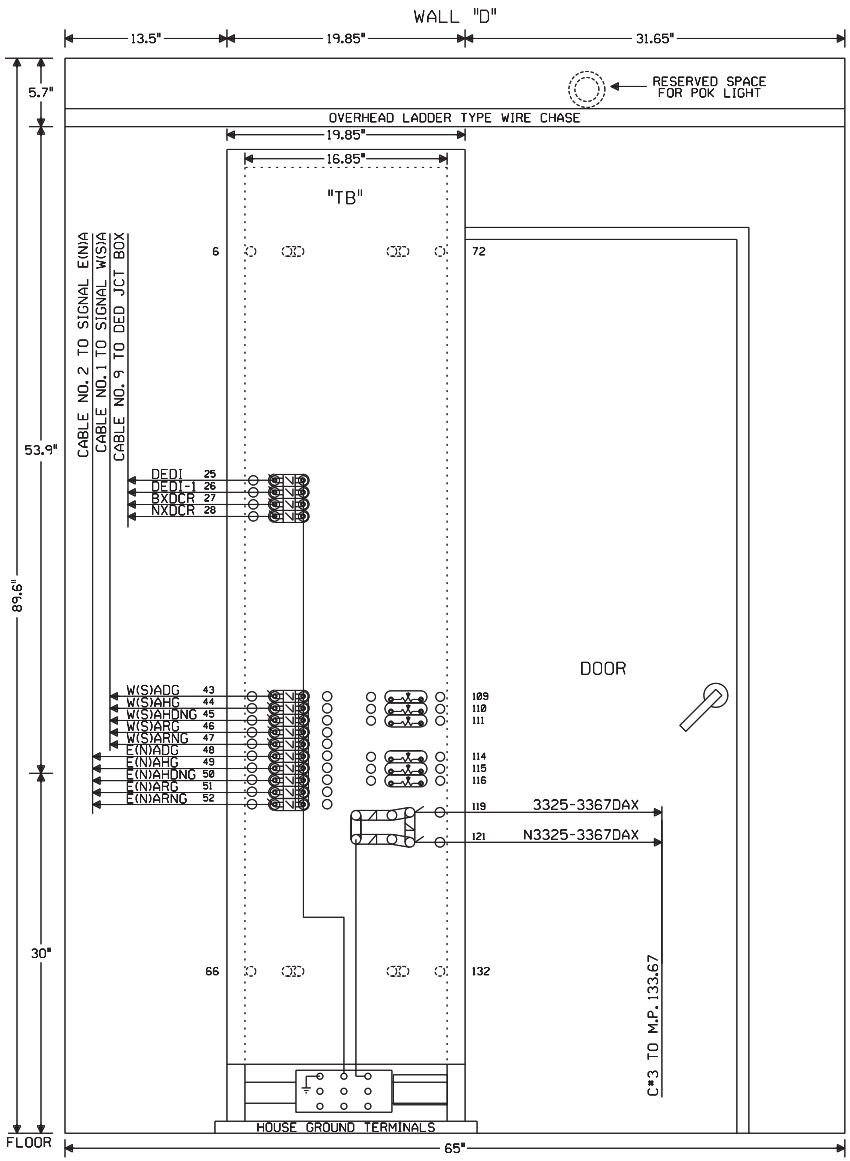

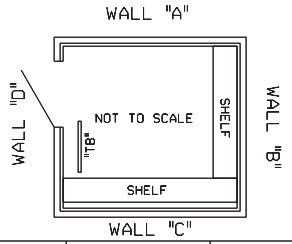

NOTE: ALL DIMENSIONS SHOWN ARE APPROXIMATE.

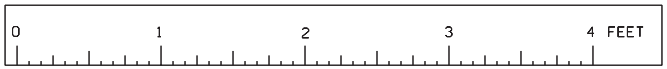

SCALE: 1.5 INCHES = 1 FOOT

NEW SHEET

Designed: 4/3/13 TIER 4 ILLINOIS HIGH SPEED RAIL PROJECT PHASE 2 MP 124.85-134.90 Rec*: W0*: 22816 IS: MWK WIT/MJF	CIRCUIT MODIFICATIONS ARE NOT TO BE MADE WITHOUT AUTHORITY FROM THE OFFICE OF SIGNAL DESIGN	Date: 4/3/13 Des: WIT Chk: MWK PID: 85684 AFE: 22816	**UNION PACIFIC RAILROAD** INTERMEDIATE SIGNAL SPRINGFIELD SUBDIVISION Office of AVP Engineering - Signal Omaha, Nebraska	Sh.: 8 MP: 133.25 ID: CSL13325.8S	

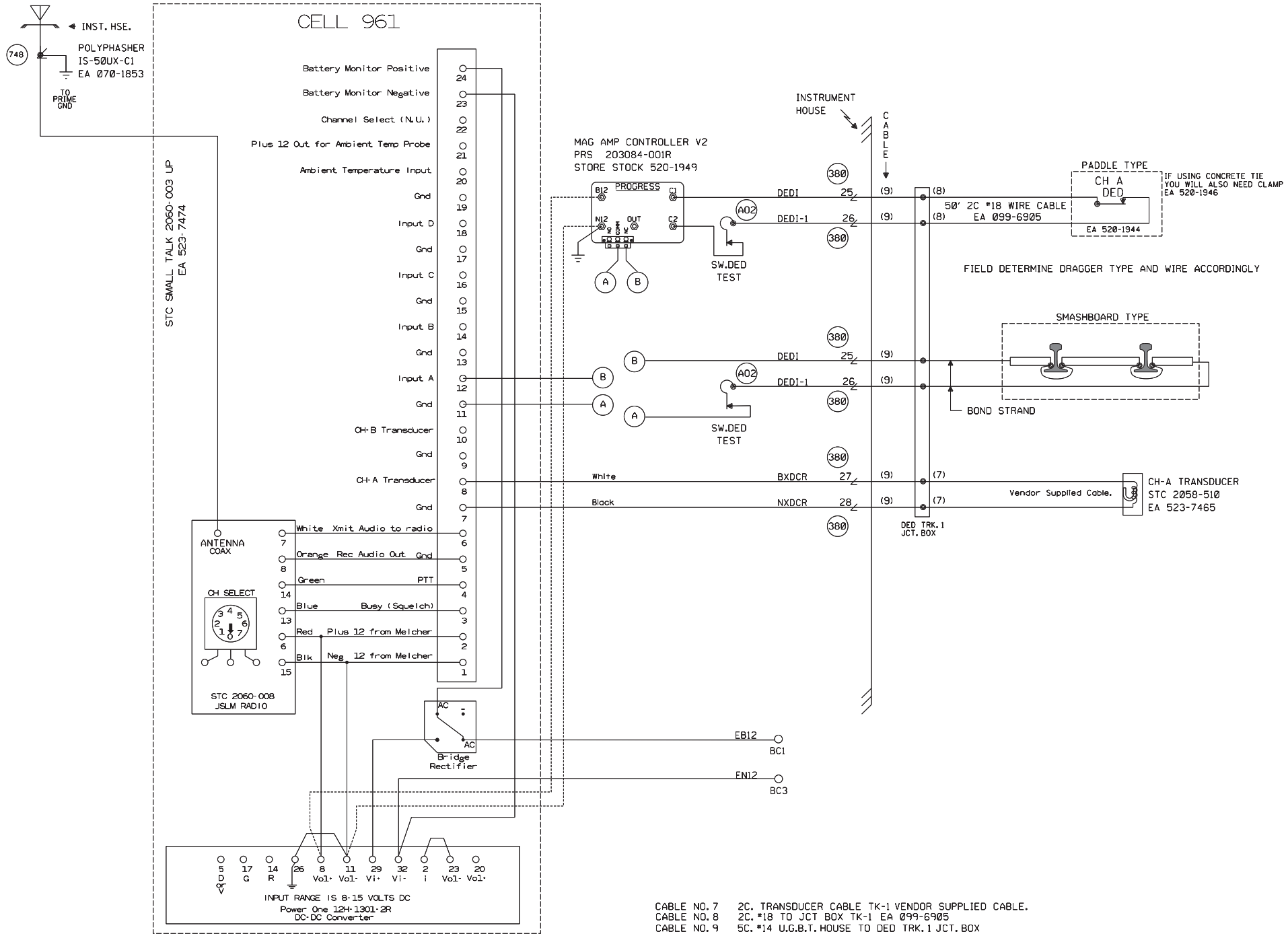

CABLE NO. 7 2C. TRANSDUCER CABLE TK-1 VENDOR SUPPLIED CABLE.
CABLE NO. 8 2C. #18 TO JCT BOX TK-1 EA 099-6905
CABLE NO. 9 5C. #14 U.G.B.T. HOUSE TO DED TRK. 1 JCT. BOX

NEW SHEET

Designed: 4/3/13
TIER 4 ILLINOIS HIGH SPEED RAIL PROJECT PHASE 2
MP 124.85-134.90
Rec#: WO#: 22816
IS: MWK
WIT/MJF

MODIFICATION LEVEL	
Q.A. LAST LEVEL CHECKED	DU
LAST LEVEL MOD THIS TYPICAL	DU
LAST LEVEL BY DESIGNER	DU
CHANGED FROM TYPICAL?	N

REV 10/3/13 1TMLHBINT.8S.DGN

CIRCUIT MODIFICATIONS ARE NOT TO BE MADE WITHOUT AUTHORITY FROM THE OFFICE OF SIGNAL DESIGN

Date: 4/3/13
Des: WIT Chk: MWK
PID: 85684
AFE: 22816

UNION PACIFIC RAILROAD

INTERMEDIATE SIGNAL
SPRINGFIELD SUBDIVISION

Office of AVP Engineering - Signal Omaha, Nebraska

Sh.: 9
MP: 133.25
ID: CSL13325.9S

Minimum Program Steps Report

Location and SIN

DOT Number: 000000R
Milepost Number: 133.25
Site Name: Bloomington, IL

SIN: 762010010016 *

* Parameter is part of office check number calculation.

MCF and Template Selection

MCF Name: GCP-T6X-02-4.mcf
MCF Revision: 24
MCFCRC: 09FC363B

Template = 4A:6 Remotes (OCCN) *

* Parameter is part of office check number calculation.

Minimum Program Steps

TEMPLATE: track 1-Remote Dax
Track 1 : GCP Frequency = 285 Hz (Field,TCN)
Track 1 : Approach Distance = 2659 ft (Set in Field,TCN)
Track 1 : Dax A Warning Time = 37 sec (OCCN) *
Track 1 : Dax A Offset Distance = 2209 ft (Set in Field)
Track 1 : GCP Transmit Level = Medium (Set in Field,TCN)

TEMPLATE: OOS
OOS Timeout = 1 hrs (Set in Field)

TEMPLATE: OP assignment 1
OUT 1.1 = T1 Dax A (OCCN) *

ADVANCED: site options
Daylight Savings = Off (Set in Field)

* Parameter is part of office check number calculation.

Check Numbers

Office Check Number: 07AEC868
Config. Check Number: 7EA65C78
(Based on MCF Revision 24)

Parameters not part of office check number calculation:

Track 1 : GCP Frequency = 285 Hz
Track 1 : Approach Distance = 2659 ft (Set in Field)
Track 1 : Dax A Offset Distance = 2209 ft (Set in Field)
Track 1 : GCP Transmit Level = Medium (Set in Field)
OOS Timeout = 1 hrs (Set in Field)
Daylight Savings = Off (Set in Field)

Comments

<none>

Configuration Package File

Filename: CSL13325_000000R.pac
Path: C:\PAC File\
Date/Time: 11/19/2013 11:10:18
DT Version: 5.3.3