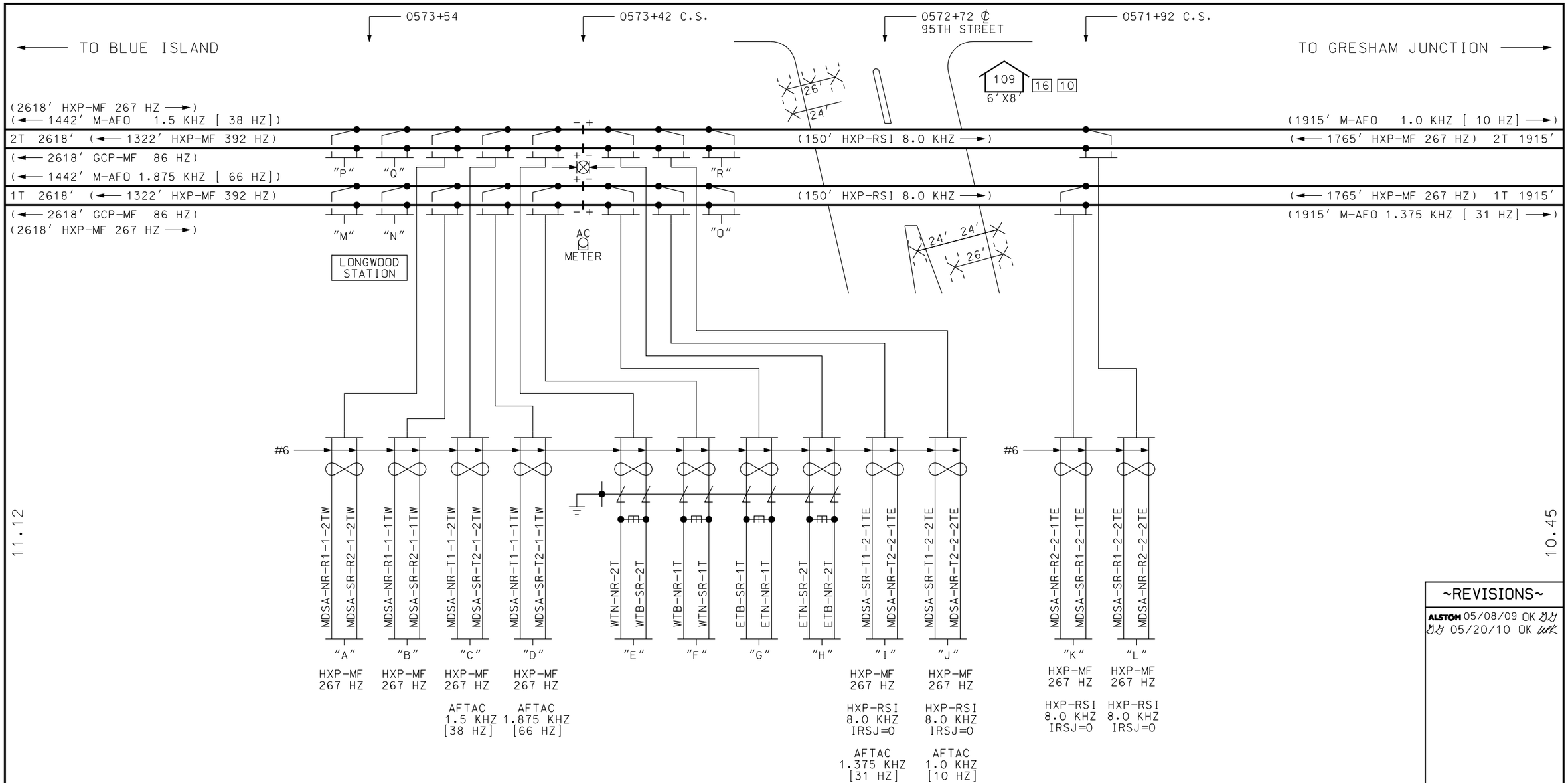

NOTES:

PRIME GROUND

INDICATES LEADS TWISTED IN PAIRS.

INDICATES CANTILEVER SUPPORTED FLASHING LIGHT SIGNAL PER FHWA MUTCD WITH PEDESTRIAN BELL ON BOTH SIGNALS.

INDICATES AUTOMATIC GATE PER FHWA MUTCD.

INDICATES LEADS TO BE WELDED ON RAIL AS CLOSE TOGETHER AS POSSIBLE.

(← 2618' GCP-MF 86 HZ)

- FREQUENCY
- LENGTH OF CIRCUIT
- DIRECTION TO TRANSMITTER

EW & WW APPROACH - 1T & 2T AT 79 MPH		
MIN. WARNING TIME	=	25 SEC *
REACTION TIME	=	5 SEC
RESPONSE TIME	=	5 SEC
APPROACH LENGTH	=	4055 FT.
* IDOT SIMULTANEOUS PREEMPT = 25 SEC		

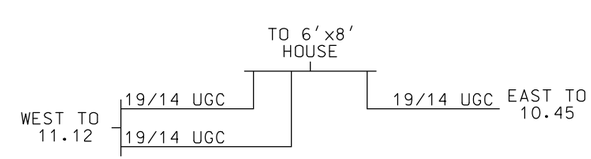

~REVISIONS~

ALSTOM 05/08/09 OK
05/20/10 OK

DOT#609-011A

Metra SIGNAL ENGINEERING CHICAGO, ILLINOIS

CHICAGO TO JOLIET
95TH STREET, CHICAGO, IL
PLAN VIEW

REFERENCE:			DATE:
10.85 SH.1 THRU SH.14			09/17/02
DESIGNED	DRAWN	CHECKED	APPROVED
SSC	SSC		
DISTRICT	PRINT NUMBER		
RI	10.85 SH.1		

21-MAY-2010 13:45

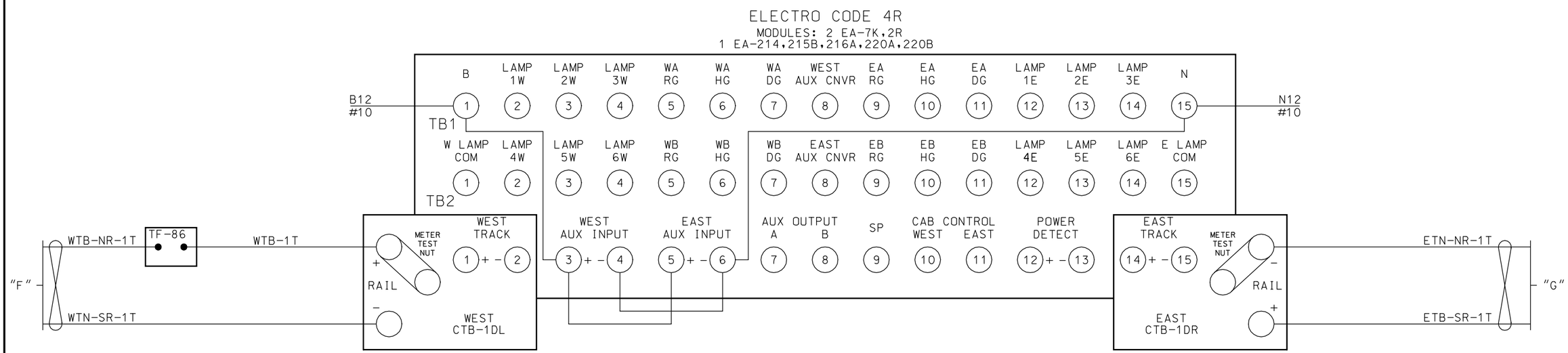

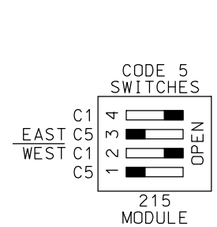

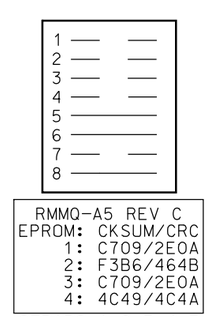

ALL WIRING ON THIS SHEET
#10 AWG UNLESS NOTED

~REVISIONS~

05/29/08 OK

Metra SIGNAL ENGINEERING
CHICAGO, ILLINOIS

CHICAGO TO JOLIET
95TH STREET, CHICAGO, IL
ELECTRO CODE REPEATER TRACK 1

REFERENCE:	DATE:
10.85 SH.1 THRU SH.14	09/17/02

DESIGNED	DRAWN	CHECKED	APPROVED
SSC	SSC		WPK

DISTRICT	PRINT NUMBER
RI	10.85 SH.2

19-MAY-2010 10:57

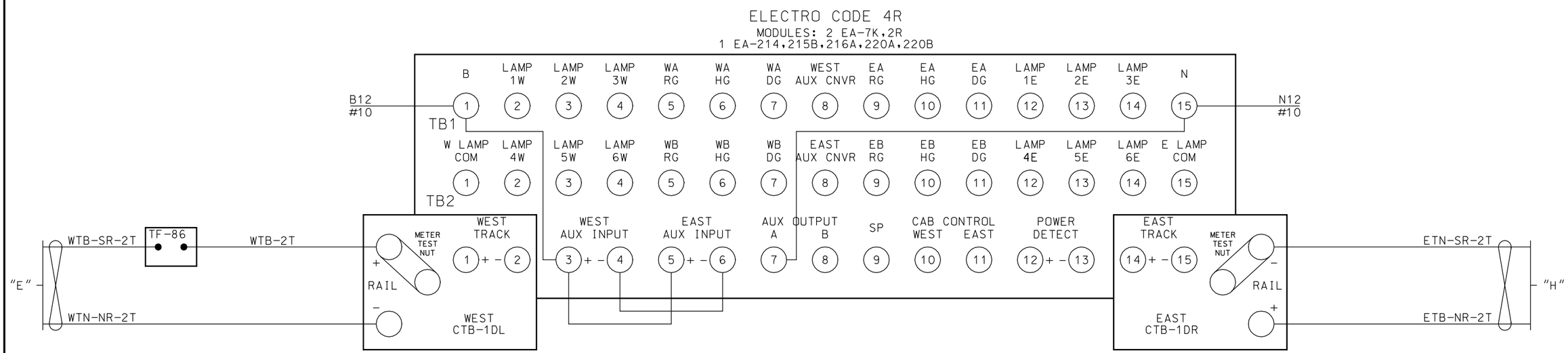

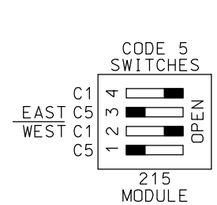

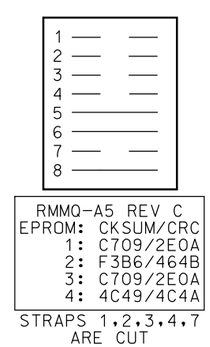

ALL WIRING ON THIS SHEET
#10 AWG UNLESS NOTED

~REVISIONS~

05/29/08 OK

Metra SIGNAL ENGINEERING
CHICAGO, ILLINOIS

CHICAGO TO JOLIET
95TH STREET, CHICAGO, IL
ELECTRO CODE REPEATER TRACK 2

REFERENCE:	DATE:
10.85 SH.1 THRU SH.14	09/17/02

DESIGNED	DRAWN	CHECKED	APPROVED
SSC	SSC		WPK

DISTRICT	PRINT NUMBER
RI	10.85 SH.3

19-MAY-2010 10:57

TK.1 = TK. 1 WEST
TK.2 = TK. 1 EAST

ADJUST SEL
- APPROACH LENGTH:
  - TK.1 - 2602'
  - TK.2 - 1765'
- WARNING TIME:
  - TK.1 - 30 SEC.
  - TK.2 - 30 SEC.
- MD RESTART:
  - TK.1 - 50
  - TK.2 - 50

OPTIONS
1. TK-ENA:
   - TK.1 - UP
   - TK.2 - UP
2. TK FO
   - TK.1 - STRAP
   - TK.2 - STRAP
3. CW/MD
   - TK.1 - C
   - TK.2 - C
4. UNI-BI
   - TK.1 - b
   - TK.2 - b
6. CWEWT
   - TK.1 - 80
   - TK.2 - 80
7. LOS
   - TK.1 - 16
   - TK.2 - 16
8. IJ-LOS
   - TK.1 - 5
   - TK.2 - 5
11. AX 1
    - TK-ASN - 2
    - OF-TK - 1472'
    - WT - 31
    - MD-RST - 50
    - CW/MD - C
    - CJ-LOS - 0
    - PJ-DET - 15
    - POS-ST - dn
12. AX 2
    - TK-ASN - 2
    - OF-TK - 2768'
    - WT - 31
    - MD-RST - 10
    - CW/MD - C
    - CJ-LOS - 0
    - PJ-DET - 15
    - POS-ST - dn
13. AX 3
    - TK-ASN -
    - OF-TK -
    - WT -
    - MD-RST -
    - CW/MD -
    - CJ-LOS - 0
    - PJ-DET - 15
    - POS-ST - dn
17. MDR-AX - n
18. MD-TMR
    - TK.1 - 10
    - TK.2 - 10
19. MIN-WT - 0
20. FS-DET - 0
48. PF-ENA - UP

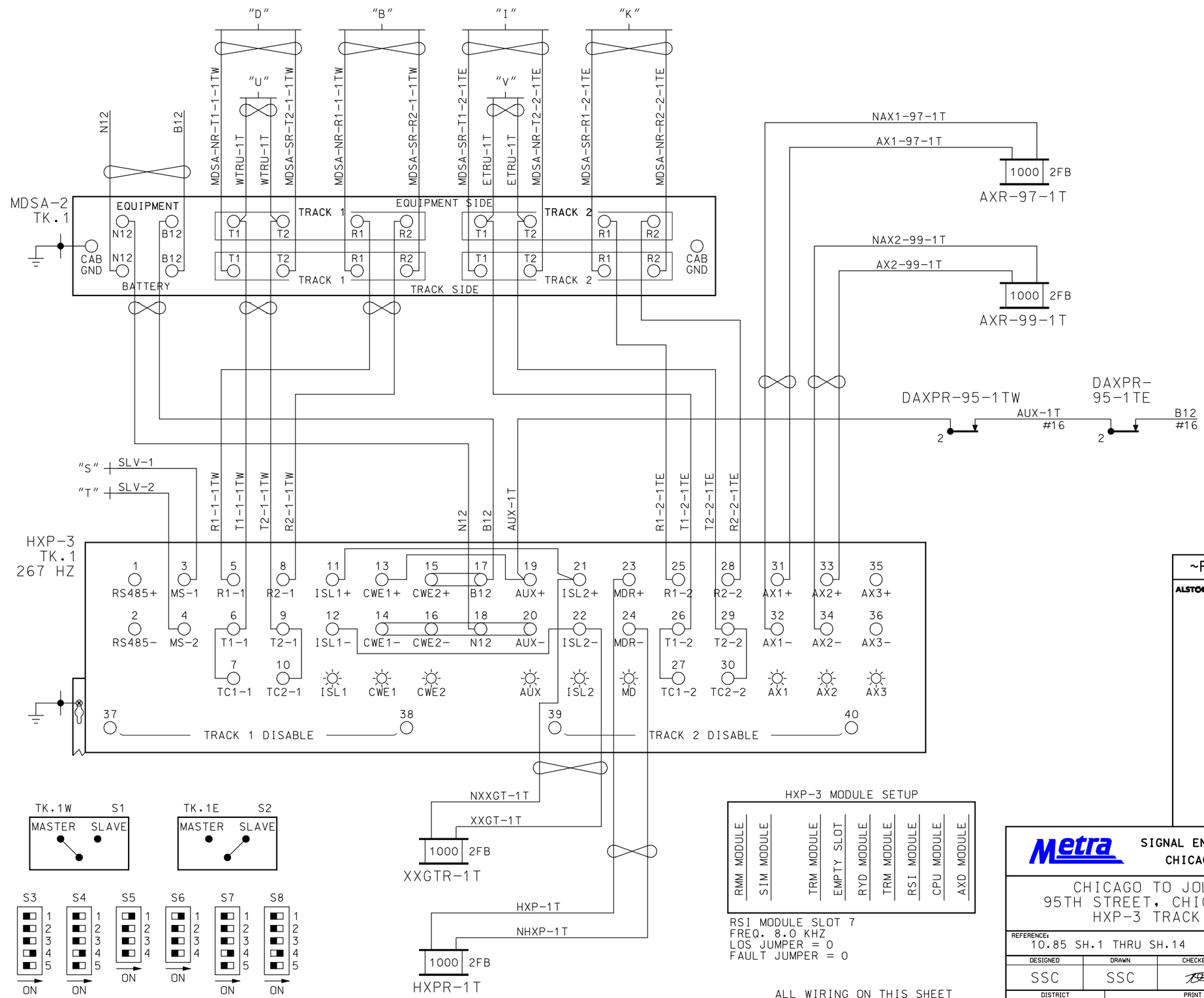

~REVISIONS~

ALSTOM 05/08/09 OK

Metra SIGNAL ENGINEERING CHICAGO, ILLINOIS

CHICAGO TO JOLIET
95TH STREET, CHICAGO, IL
HXP-3 TRACK 1

REFERENCE:			DATE:
10.85 SH.1 THRU SH.14			09/17/02
DESIGNED	DRAWN	CHECKED	APPROVED
SSC	SSC		
DISTRICT	PRINT NUMBER		
RI	10.85 SH.4		

19-MAY-2010 10:57

TK.1 = TK. 2 WEST
TK.2 = TK. 2 EAST

ADJUST SEL

APPROACH LENGTH:
TK.1 - 2602'
TK.2 - 1765'

WARNING TIME:
TK.1 - 30 SEC.
TK.2 - 30 SEC.

MD RESTART:
TK.1 - 50
TK.2 - 50

OPTIONS

1. TK-ENA:
TK.1 - UP
TK.2 - UP

2. TK FO
TK.1 - STRAP
TK.2 - STRAP

3. CW/MD
TK.1 - C
TK.2 - C

4. UNI-BI
TK.1 - b
TK.2 - b

6. CWEWT
TK.1 - 80
TK.2 - 80

7. LOS
TK.1 - 16
TK.2 - 16

8. IJ-LOS
TK.1 - 5
TK.2 - 5

11. AX 1
TK-ASN - 2
OF-TK - 1472'
WT - 31
MD-RST - 50
CW/MD - C
CJ-LOS - 0
PJ-DET - 15
POS-ST - dn

12. AX 2
TK-ASN - 2
OF-TK - 2786'
WT - 31
MD-RST - 10
CW/MD - C
CJ-LOS - 0
PJ-DET - 15
POS-ST - dn

13. AX 3
TK-ASN -
OF-TK -
WT -
MD-RST -
CW/MD -
CJ-LOS - 0
PJ-DET - 15
POS-ST - dn

17. MDR-AX - A

18. MD-TMR
TK.1 - 10
TK.2 - 10

19. MIN-WT - 0

20. FS-DET - 0

48. PF-ENA - UP

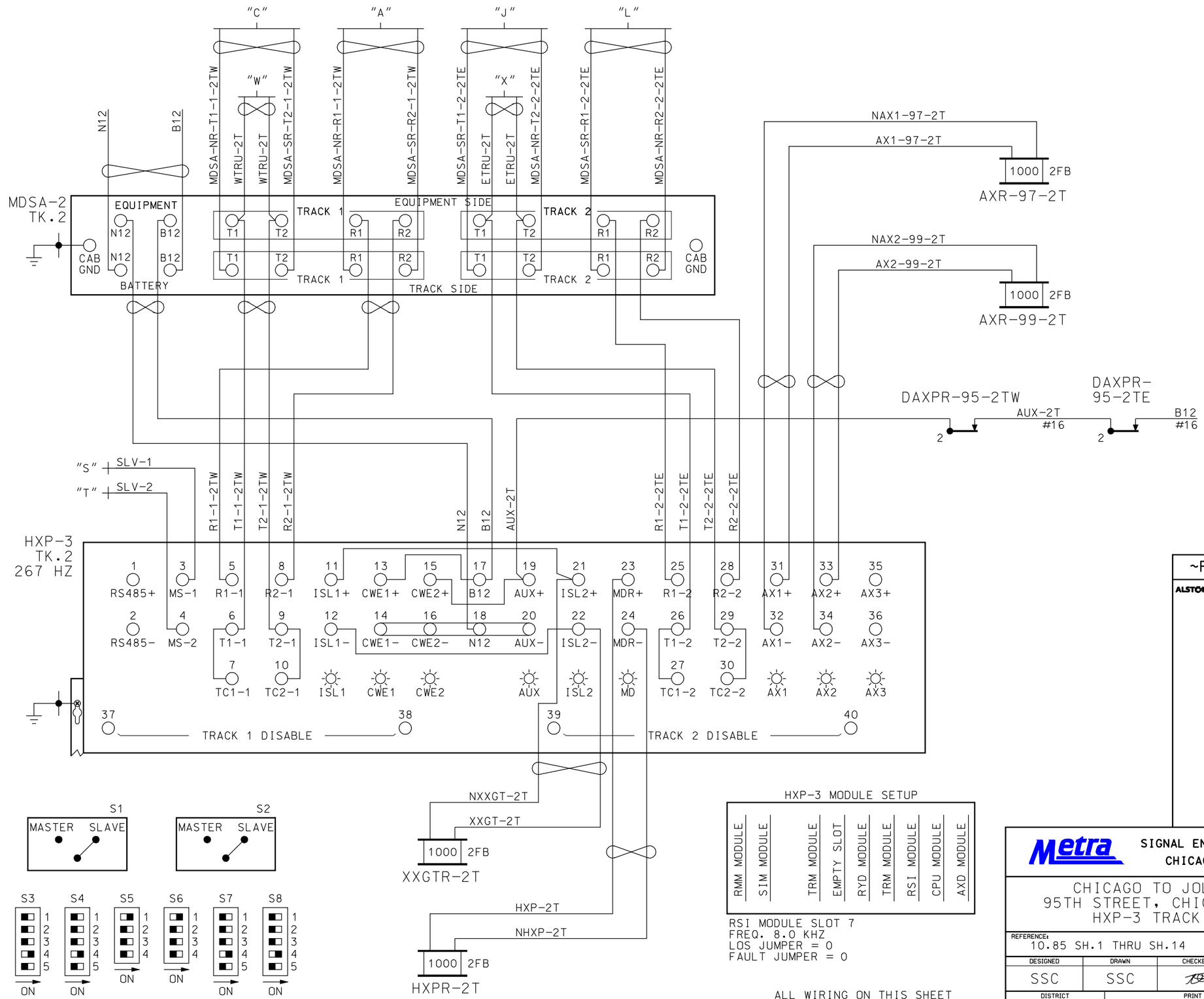

~REVISIONS~

ALSTOM 05/08/09 OK

Metra SIGNAL ENGINEERING
CHICAGO, ILLINOIS

CHICAGO TO JOLIET
95TH STREET, CHICAGO, IL
HXP-3 TRACK 2

REFERENCE:			DATE:
10.85 SH.1 THRU SH.14			09/17/02
DESIGNED	DRAWN	CHECKED	APPROVED
SSC	SSC		
DISTRICT	PRINT NUMBER		
RI	10.85 SH.5		

19-MAY-2010 10:57

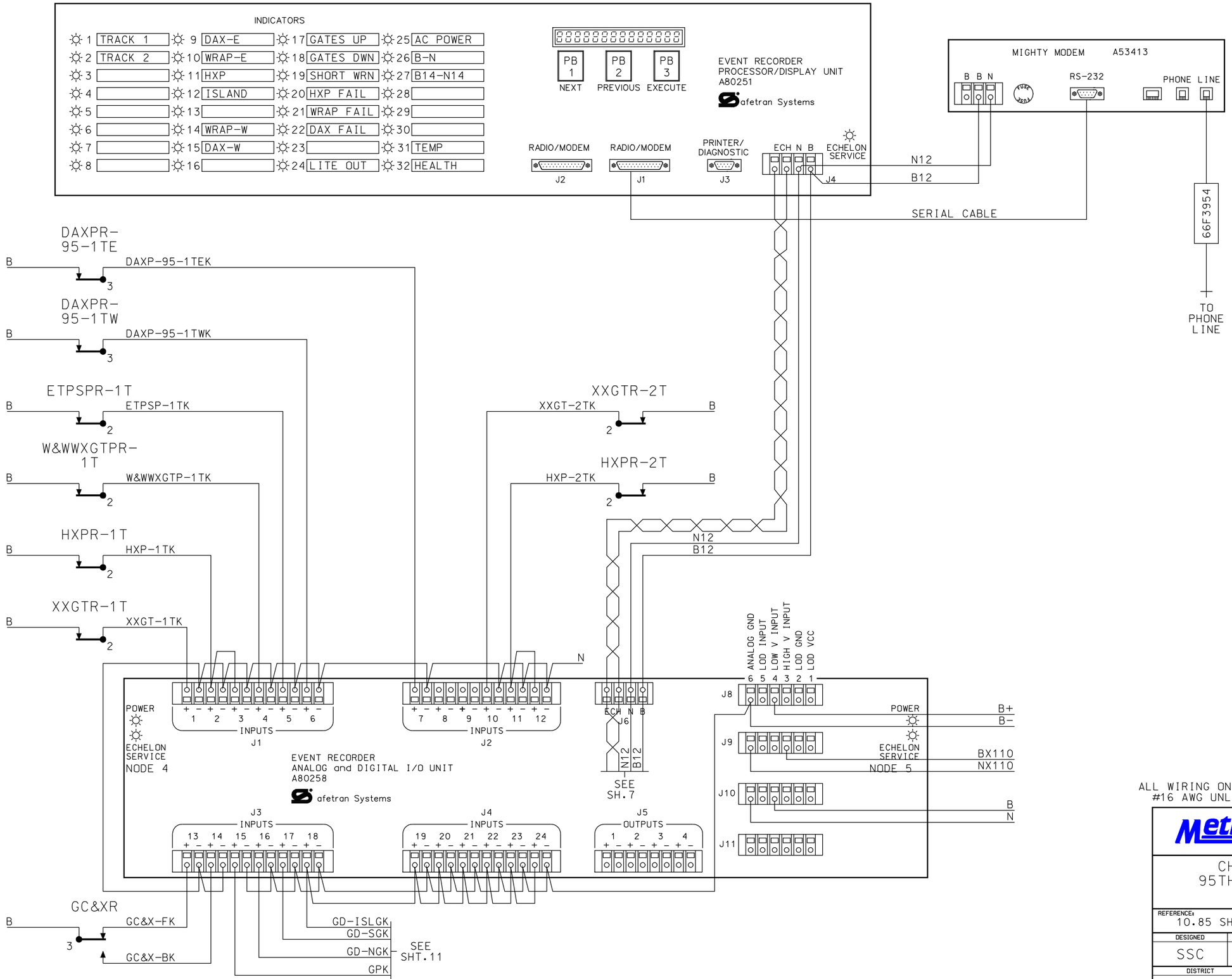

SEA/R PROGRAMMING CHART

CUSTOM FUNCTIONS	
FUNCTION	ON/OFF
1TRACK.ENA	ON
2TRACK.ENA	ON
3TRACK.ENA	OFF
4TRACK.ENA	OFF
5TRACK.ENA	OFF
6TRACK.ENA	OFF
GATEALM.ENA	ON
WRNTIME.ENA	ON
GCPFAIL.ENA	ON
HOLDDWN.ENA	OFF
LOD1.ENA	ON
LOD2.ENA	ON
LOD3.ENA	ON
LOD4.ENA	OFF
ACPOWER.ENA	ON
B12/N12.ENA	ON
B14/N14.ENA	ON
B/N.ENA	ON
MASTER	N/A
SLAVE	N/A

CUSTOM TIMERS	
NAME	TIME
GATENOT.DN TMR	20 SEC.
WRN-1T.TIMER	25 SEC.
WRN-2T.TIMER	25 SEC.
WRN-3T.TIMER	0 SEC.
WRN-4T.TIMER	0 SEC.
WRN-5T.TIMER	0 SEC.
WRN-6T.TIMER	0 SEC.

NODE ASSIGNMENT	
NODE 4	DIGITAL BOARD #1
NODE 5	ANALOG BOARD #1
NODE 6	(NOT USED)
NODE 7	(NOT USED)
NODE 9	DIGITAL BOARD #2
NODE 10	ANALOG BOARD #2
NODE 12	(NOT USED)
NODE 13	(NOT USED)

~REVISIONS~

ALSTOM 05/08/09 OK

ALL WIRING ON THIS SHEET
#16 AWG UNLESS NOTED

Metra SIGNAL ENGINEERING
CHICAGO, ILLINOIS

CHICAGO TO JOLIET
95TH STREET - CHICAGO
DATA RECORDER

REFERENCE: 10.85 SH.1 THRU SH.14			DATE: 09/17/02
DESIGNED	DRAWN	CHECKED	APPROVED
SSC	SSC		WPK
DISTRICT	PRINT NUMBER		
RI	10.85 SH.6		

19-MAY-2010 10:57

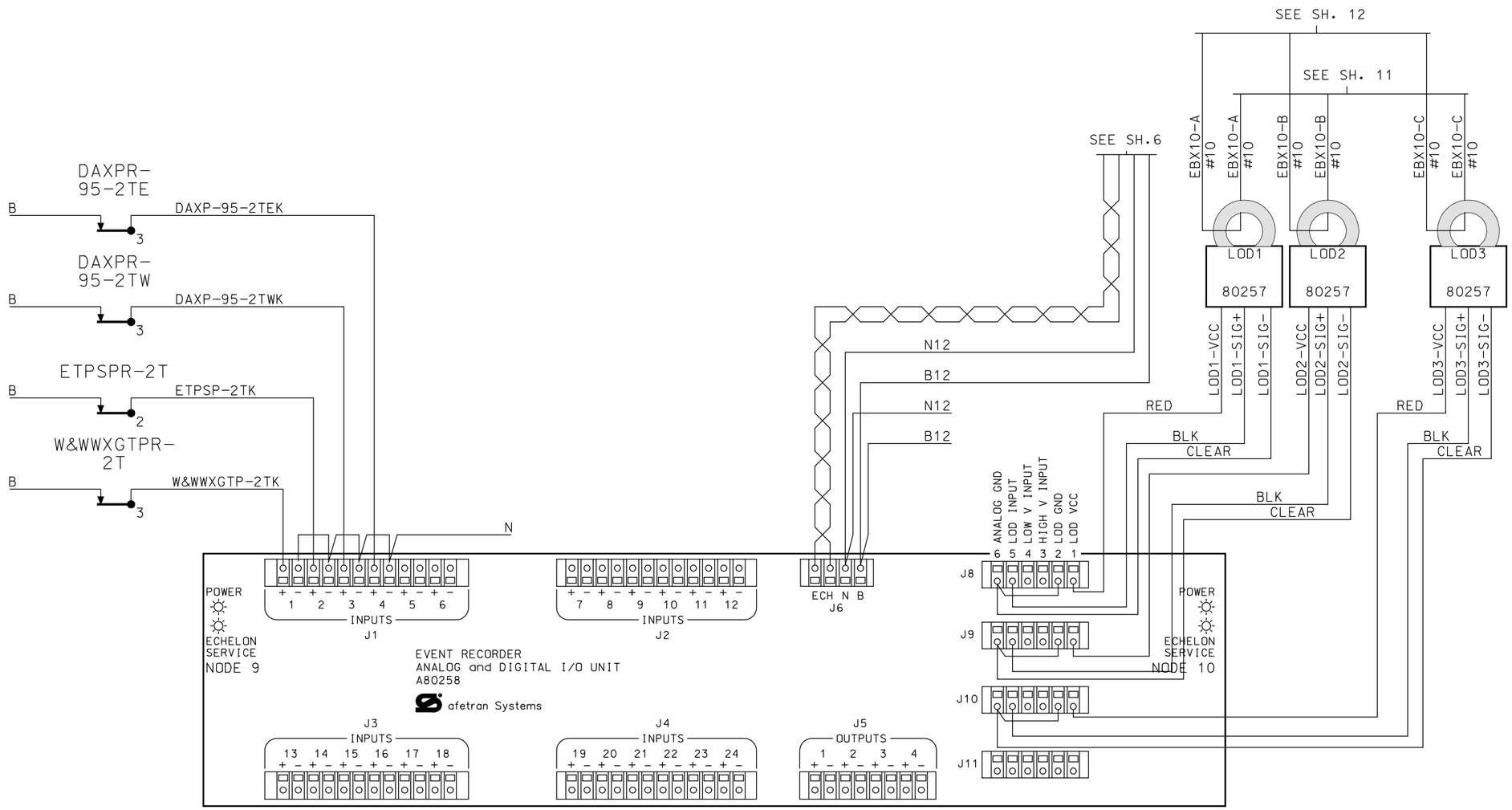

~REVISIONS~

ALSTOM 05/08/09 OK

ALL WIRING ON THIS SHEET
#16 AWG UNLESS NOTED

Metra SIGNAL ENGINEERING
CHICAGO, ILLINOIS

CHICAGO TO JOLIET
95TH STREET - CHICAGO
DATA RECORDER

REFERENCE:			DATE:
10.85 SH.1 THRU SH.14			09/17/02
DESIGNED	DRAWN	CHECKED	APPROVED
SSC	SSC		WAK
DISTRICT	PRINT NUMBER		
RI	10.85 SH.7		

19-MAY-2010 10:57

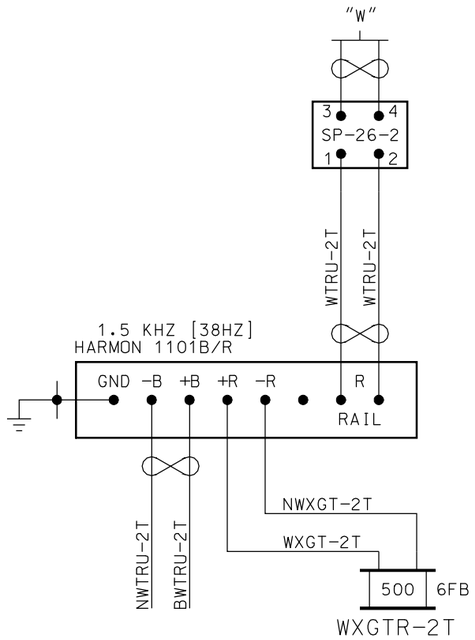

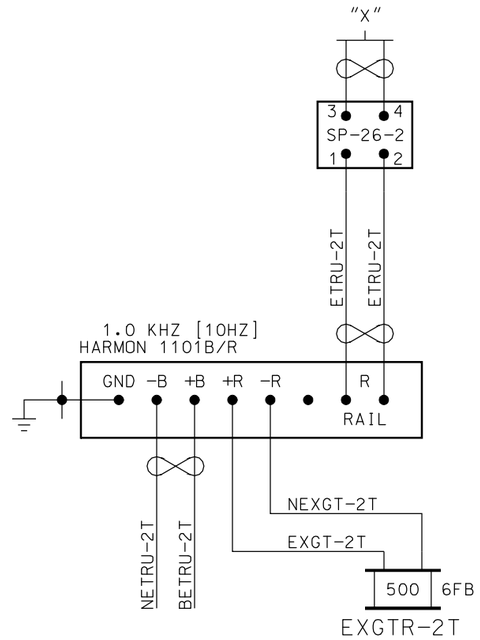

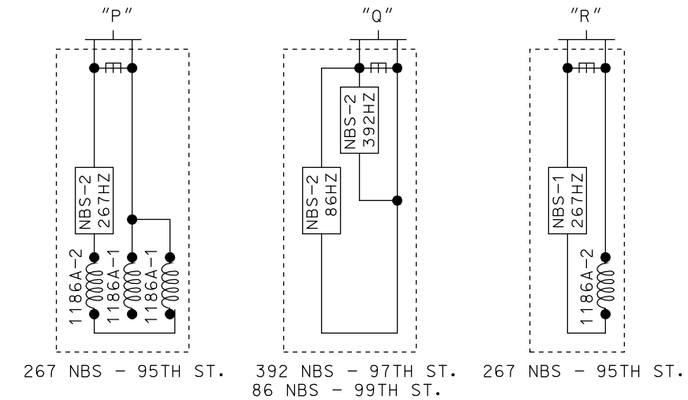

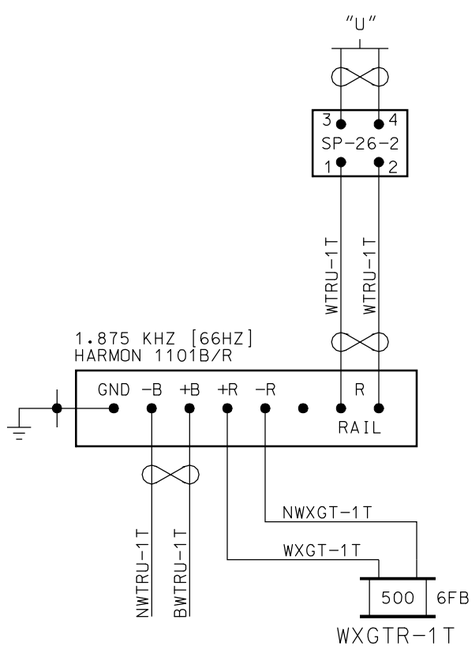

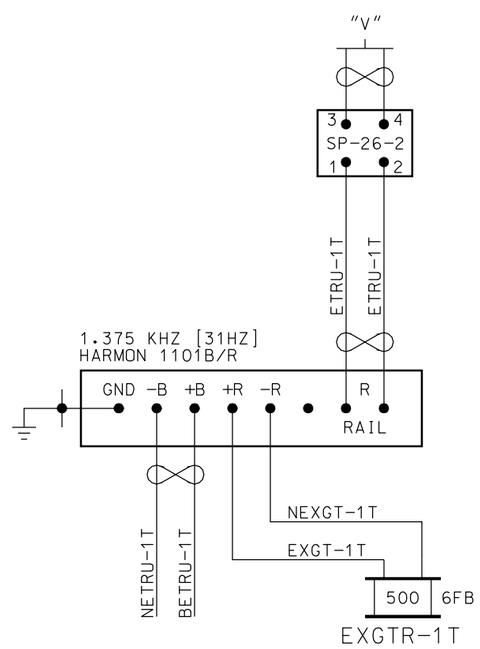

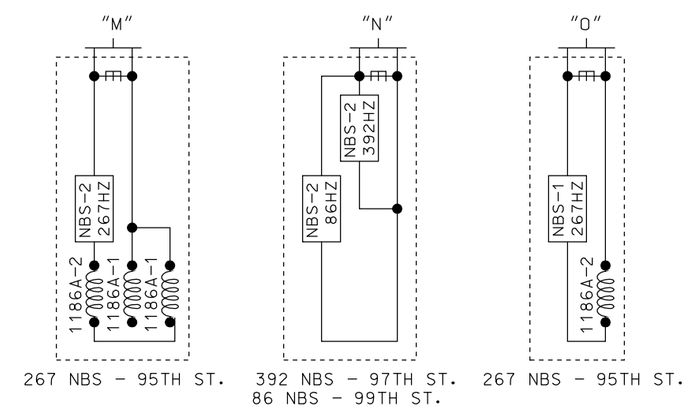

~REVISIONS~

ALSTOM 05/08/09 OK

Metra SIGNAL ENGINEERING
CHICAGO, ILLINOIS

CHICAGO TO JOLIET
95TH STREET, CHICAGO, IL
AFTAC - NBS/D.L.

REFERENCE:			DATE:
10.85 SH.1 THRU SH.14			09/17/02
DESIGNED	DRAWN	CHECKED	APPROVED
FCB	SSC	FCB	WPK
DISTRICT	PRINT NUMBER		
RI	10.85 SH.8		

19-MAY-2010 10:57

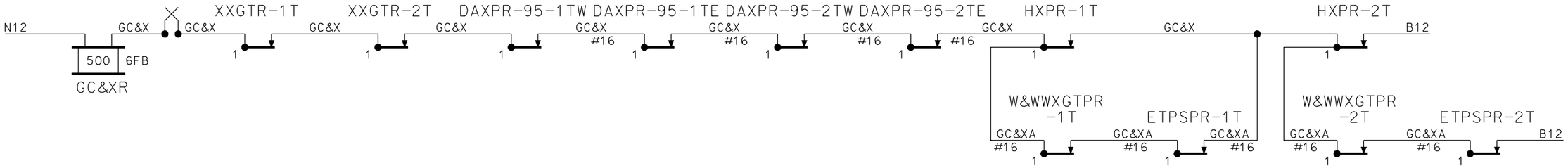

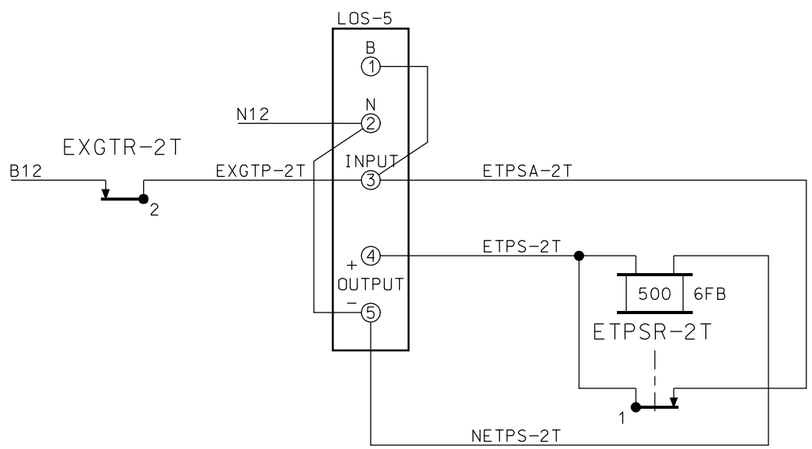

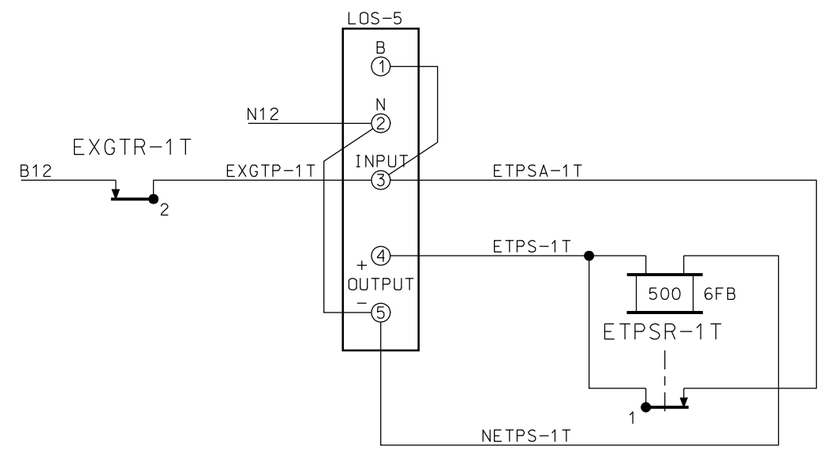

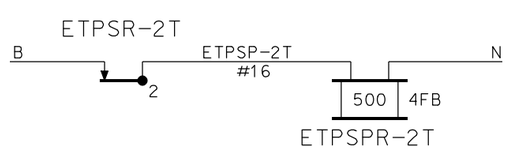

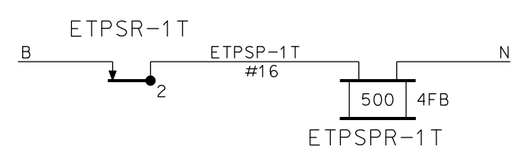

~REVISIONS~

ALSTOM 05/08/09 OK

Metra SIGNAL ENGINEERING CHICAGO, ILLINOIS

CHICAGO TO JOLIET
95TH STREET, CHICAGO, IL
LOCAL CIRCUITS

REFERENCE:			DATE:
10.85 SH.1 THRU SH.14			09/17/02
DESIGNED	DRAWN	CHECKED	APPROVED
SSC	SSC		
DISTRICT	PRINT NUMBER		
RI	10.85 SH.9		

19-MAY-2010 10:57

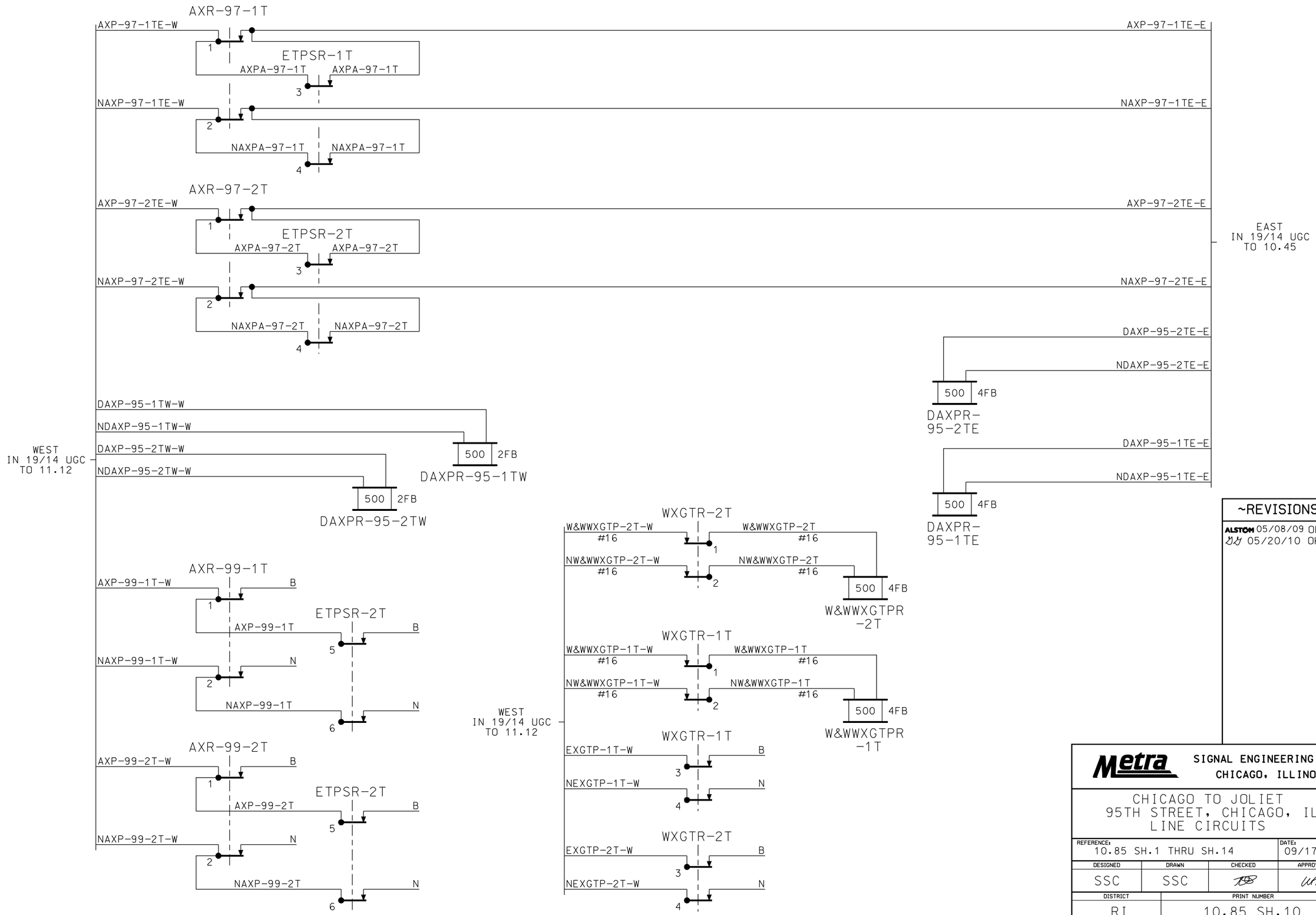

~REVISIONS~

ALSTOM 05/08/09 OK
05/20/10 OK

Metra SIGNAL ENGINEERING
CHICAGO, ILLINOIS

CHICAGO TO JOLIET
95TH STREET, CHICAGO, IL
LINE CIRCUITS

REFERENCE:			DATE:
10.85 SH.1 THRU SH.14			09/17/02
DESIGNED	DRAWN	CHECKED	APPROVED
SSC	SSC		
DISTRICT	PRINT NUMBER		
RI	10.85 SH.10		

21-MAY-2010 13:45

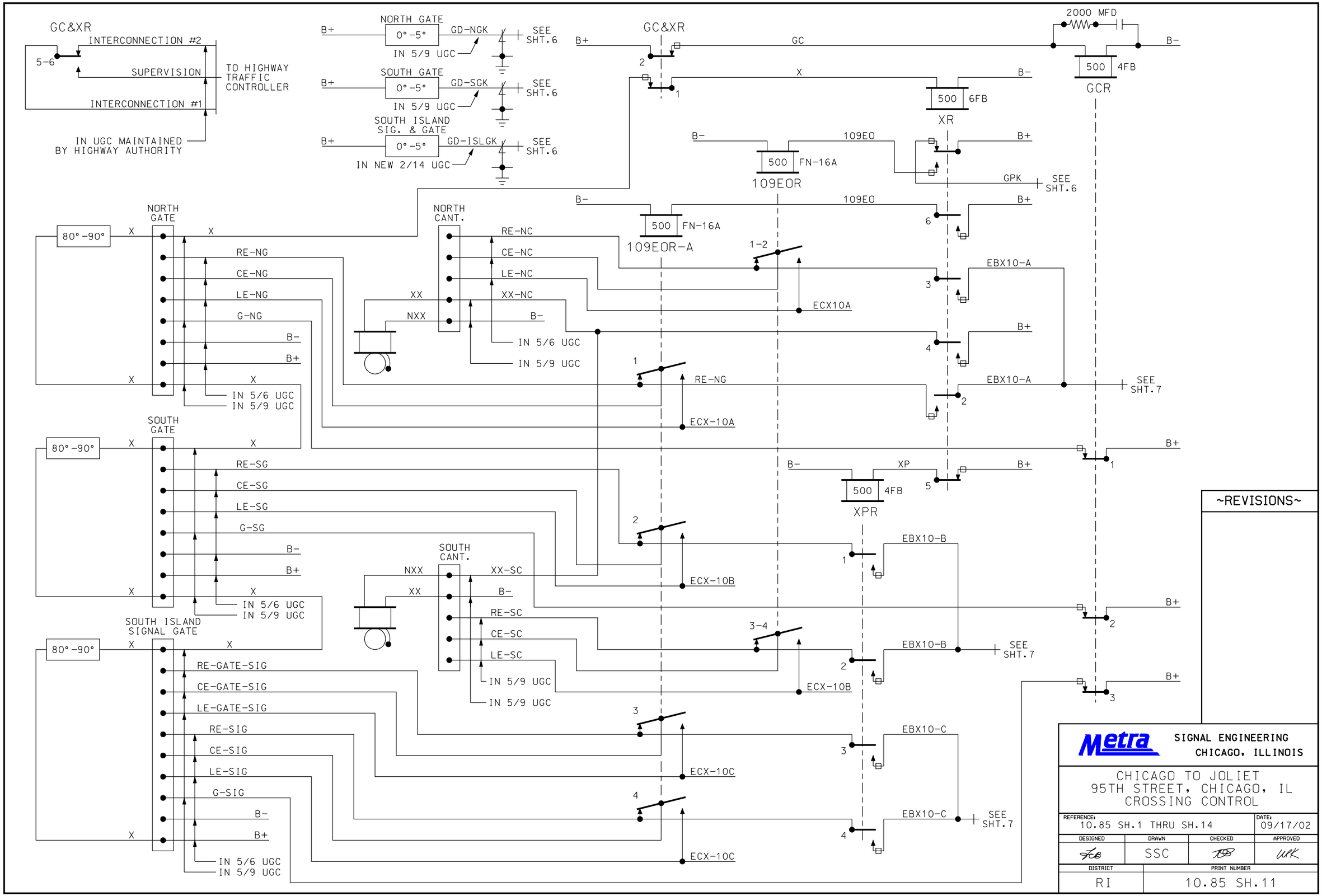

19-MAY-2010 10:57

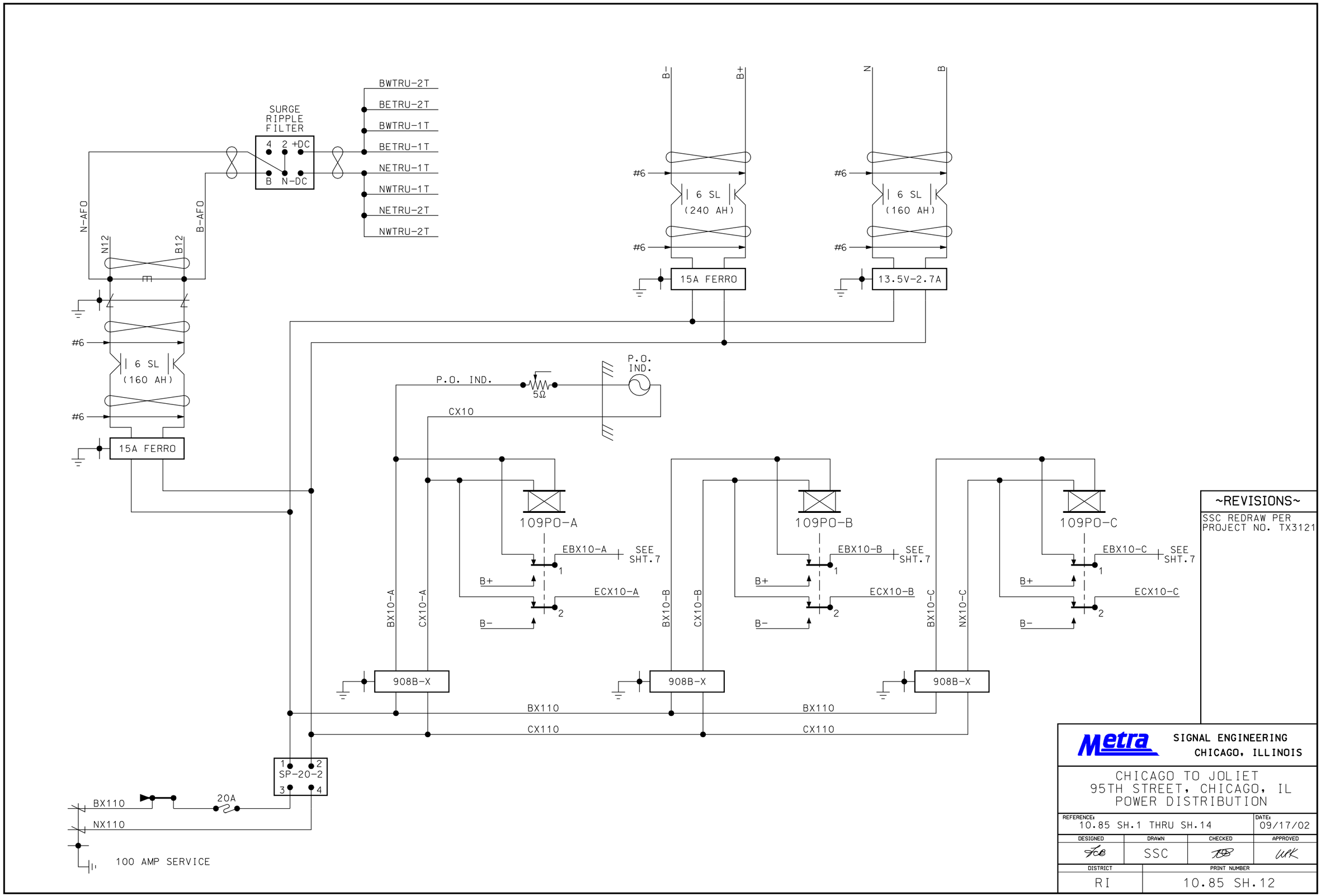

19-MAY-2010 10:57

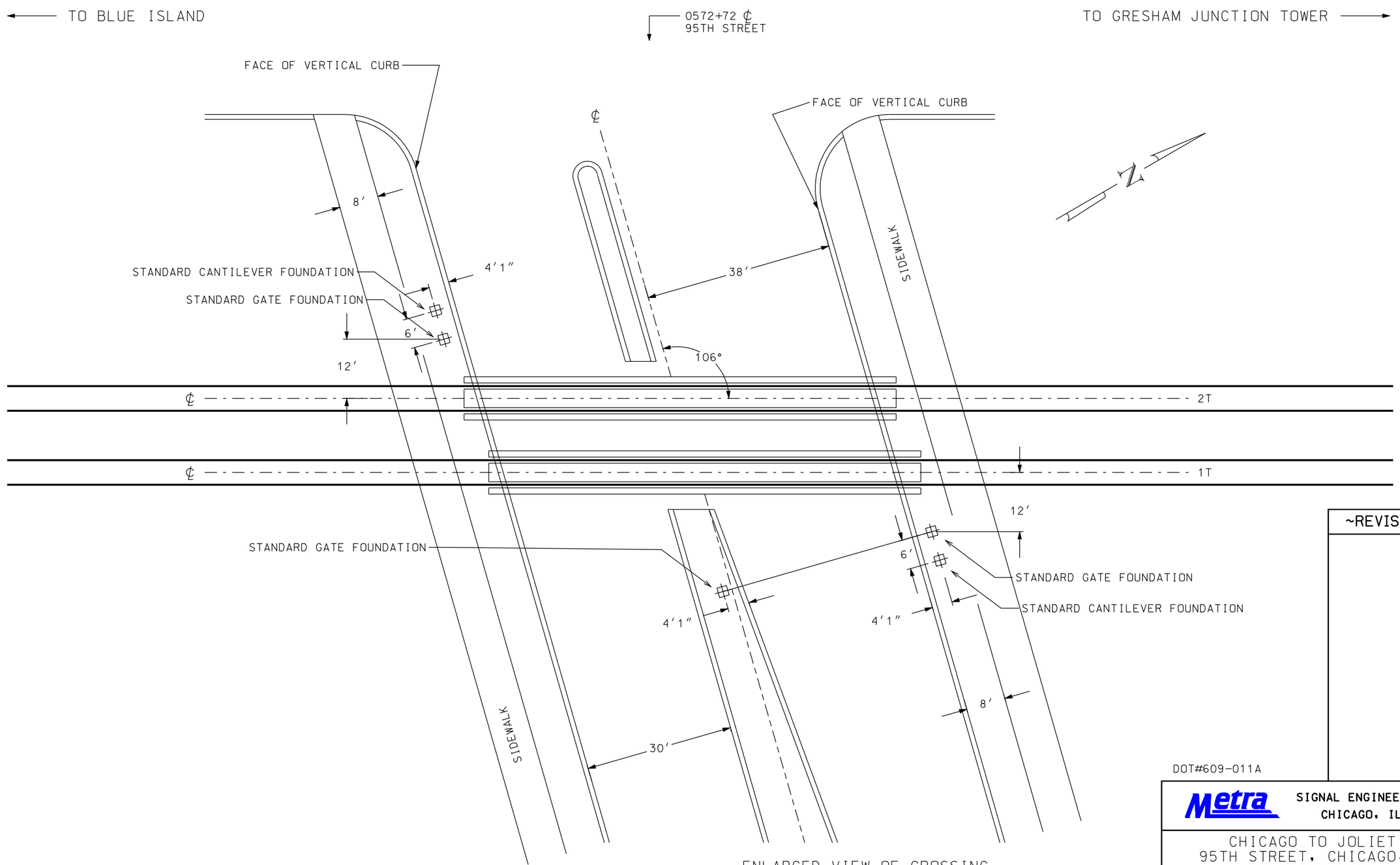

ENLARGED VIEW OF CROSSING
SHOWING LOCATION OF SIGNAL FOUNDATIONS

~ NOT TO SCALE ~

RELAY HOUSE TO BE LOCATED A MINIMUM OF
30 FEET FROM THE EDGE OF THE NEAREST TRAFFIC LANE
AND AN ADEQUATE DISTANCE FROM TRACK IN ORDER TO
REDUCE OBSTRUCTION TO MOTORIST'S SIGHT DISTANCE.

~REVISIONS~

DOT#609-011A

Metra SIGNAL ENGINEERING
CHICAGO, ILLINOIS

CHICAGO TO JOLIET
95TH STREET, CHICAGO, IL
ENLARGED VIEW

REFERENCE:			DATE:
10.85 SH.1 THRU SH.14			09/17/02
DESIGNED	DRAWN	CHECKED	APPROVED
FCB	SSC	TDB	WPK
DISTRICT	PRINT NUMBER		
RI	10.85 SH.13		

19-MAY-2010 10:57

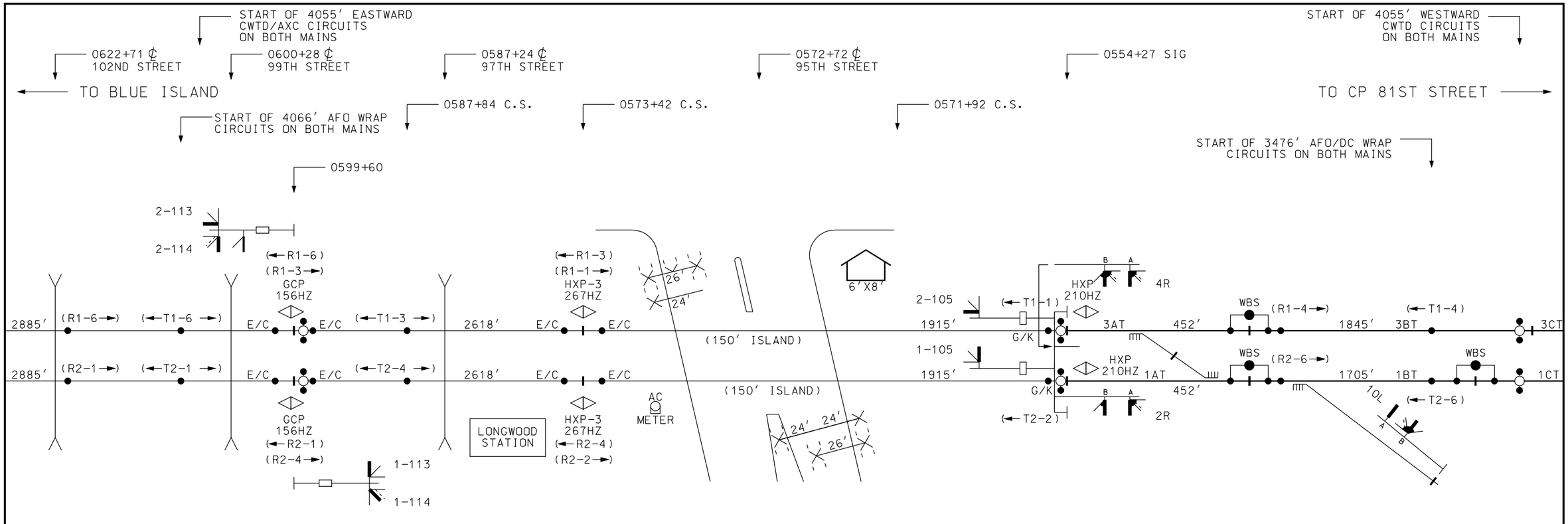

●—●—●	WIDEBAND SHUNT COUPLER
E/C	ELECTRO PNEUMATIC ELECTRO CODE TRACK CIRCUIT
G/K	GENRAKODE TRACK CIRCUIT
◁	SINGLE DIRECTION APPLICATION
●○●	NARROW BAND SHUNT
◁▷	SEMI-BIDIRECTIONAL APPLICATION
HXP *** HZ	HARMON CROSSING PROCESSOR OPERATION FREQUENCY
GCP *** HZ	GRADE CROSSING PREDICTOR OPERATION FREQUENCY
CWTD	CONSTANT WARNING TIME DEVICE
AFO	AUDIO FREQUENCY OVERLAY
(T)	AFTAC TRANSMITTER
(R)	AFTAC RECEIVER

EW & WW APPROACH - 1T & 2T AT 79 MPH		
MIN. WARNING TIME	=	25 SEC *
REACTION TIME	=	5 SEC
RESPONSE TIME	=	5 SEC
APPROACH LENGTH	=	4055 FT.
* IDOT SIMULTANEOUS PREEMPT = 25 SEC		

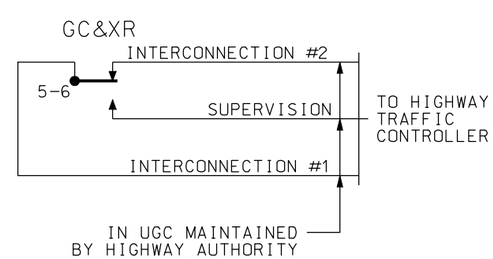

~REVISIONS~

ALSTOM 05/08/09 OK

DOT# 609-011A

Metra SIGNAL ENGINEERING CHICAGO, ILLINOIS

CHICAGO TO JOLIET
95TH STREET, CHICAGO, IL
I.C.C. FORM 3 EXHIBIT

REFERENCE:			DATE:
10.85 SH.1 THRU SH.14			09/17/02
DESIGNED	DRAWN	CHECKED	APPROVED
SSC	SSC		WPK
DISTRICT	PRINT NUMBER		
RI	10.85 SH.14		

19-MAY-2010 10:57

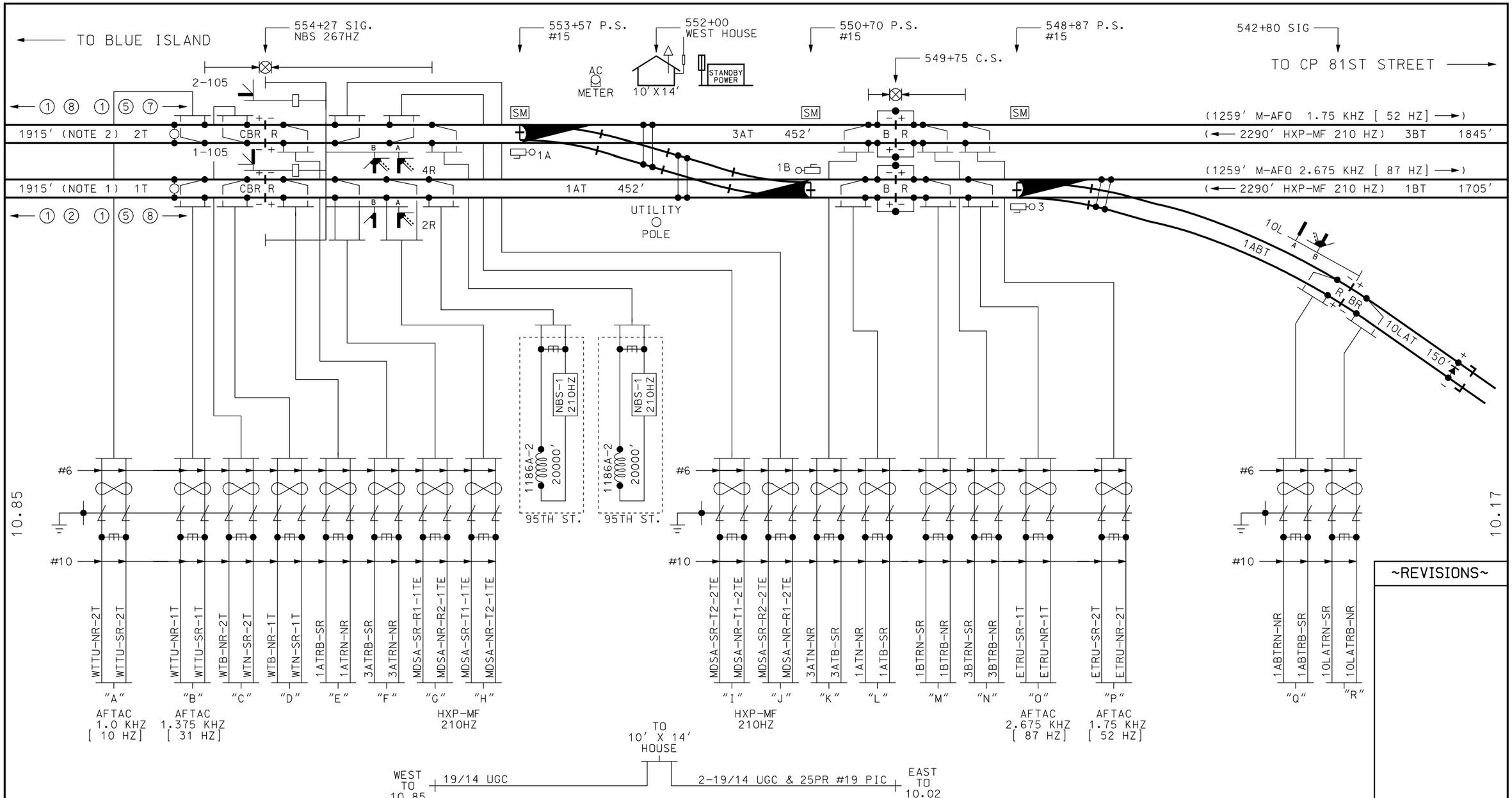

NOTE 1 = (1915' M-AFO 1.375 KHZ [31 HZ] ⟶)
(⟵ 1765' HXP-MF 267 HZ)

NOTE 2 = (1915' M-AFO 1.0 KHZ [10 HZ] ⟶)
(⟵ 1765' HXP-MF 267 HZ)

(⟵ 2290' HXP-MF 210 HZ)
- FREQUENCY
- LENGTH OF CIRCUIT
- DIRECTION TO TRANSMITTER

NARROW BAND SHUNT

INDICATES WIRES IN TWISTED PAIRS.

PRIME GROUND

INDICATES LEADS TO BE WELDED ON RAIL AS CLOSE TOGETHER AS POSSIBLE.

INDICATES WIDEBAND SHUNT COUPLER (DUAL)

VHF ANTENNA

GPS ANTENNA

~REVISIONS~

Metra SIGNAL ENGINEERING
CHICAGO, ILLINOIS

CHICAGO TO JOLIET
GRESHAM JCT. - WEST HOUSE
PLAN VIEW

REFERENCE:			DATE:
10.45 SH.1 THRU SH.82			03/01/10
DESIGNED	DRAWN	CHECKED	APPROVED
ALSTOM	ALSTOM	GG	WK
DISTRICT	PRINT NUMBER		
RI	10.45 SH.1		

19-MAY-2010 10:56

TK.1 = TK. 1E
TK.2 = DISABLED

ADJUST SEL
APPROACH LENGTH:
TK.1 - 2290'
TK.2 - '

WARNING TIME:
TK.1 - 30 SEC.
TK.2 - SEC.

MD RESTART:
TK.1 - 0
TK.2 - 0

OPTIONS
1. TK-ENA:
TK.1 - UP
TK.2 - DN

2. TK FO
TK.1 - STRAP
TK.2 -

3. CW/MD
TK.1 - C
TK.2 - NA

4. UNI-BI
TK.1 - BI
TK.2 - NA

6. CWEWT
TK.1 - 80
TK.2 - NA

7. LOS
TK.1 - 16
TK.2 - NA

8. IJ-LOS
TK.1 - 5
TK.2 - NA

11. AX 1
TK-ASN - 1T
OF-TK1 - 1765'
WT - 30
MD-RST -
CW/MD - C
CJ-LOS - 0
PJ-DET - 15
POS-ST - dn

12. AX 2
TK-ASN - 1T
OF-TK2 - 3237'
WT - 31
MD-RST -
CW/MD -
CJ-LOS - 0
PJ-DET - 15
POS-ST - dn

13. AX 3
TK-ASN - NA
OF-TK1 - NA
WT -
MD-RST -
CW/MD -
CJ-LOS - 0
PJ-DET - 15
POS-ST - dn

17. MDR-AX - n
OF-TK -
CJ-LOS -
PJ-DET -

18. MD-TMR
TK.1 - 10
TK.2 - 10

19. MIN-WT - 0

20. FS-DET - 0

48. PF-ENA - UP

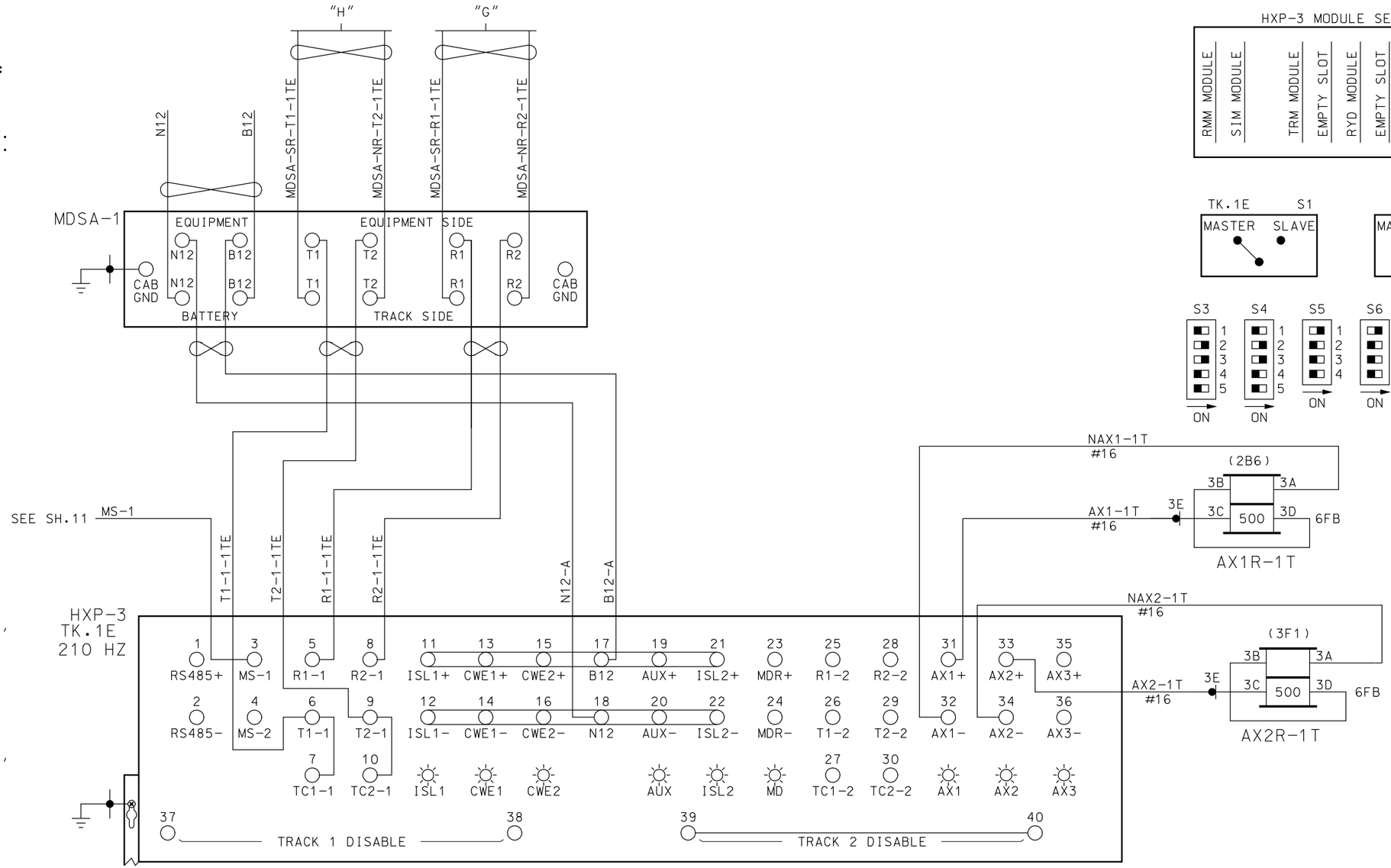

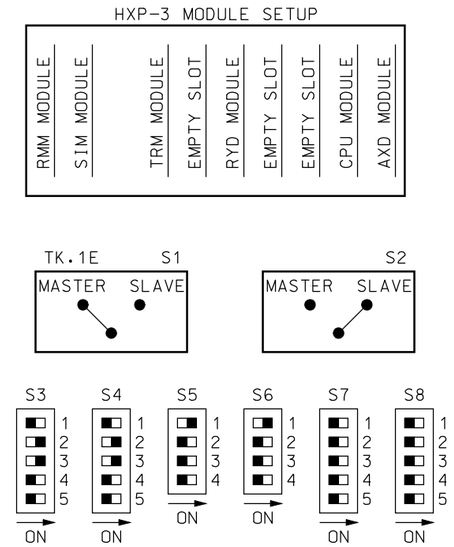

ALL WIRING ON THIS SHEET
#10 AWG UNLESS NOTED

~REVISIONS~
GY 05/20/10 OK WK

Metra SIGNAL ENGINEERING
CHICAGO, ILLINOIS

CHICAGO TO JOLIET
GRESHAM JCT. - WEST HOUSE
HXP-3 TK.1E

REFERENCE:			DATE:
10.45 SH.1 THRU SH.82			03/01/10
DESIGNED	DRAWN	CHECKED	APPROVED
ALSTOM	ALSTOM	GY	WK
DISTRICT	PRINT NUMBER		
RI	10.45 SH.10		

21-MAY-2010 13:45

TK.1 = TK. DISABLED
TK.2 = TK. 2E

ADJUST SEL
APPROACH LENGTH:
TK.1 -
TK.2 - 2290'

WARNING TIME:
TK.1 - SEC.
TK.2 - 30 SEC.

MD RESTART:
TK.1 - 0
TK.2 - 0

OPTIONS
1. TK-ENA:
TK.1 - DN
TK.2 - UP

2. TK FO
TK.1 -
TK.2 - STRAP

3. CW/MD
TK.1 - NA
TK.2 - C

4. UNI-BI
TK.1 - NA
TK.2 - BI

6. CWEWT
TK.1 - NA
TK.2 - 80

7. LOS
TK.1 - NA
TK.2 - 16

8. IJ-LOS
TK.1 - NA
TK.2 - 5

11. AX 1
TK-ASN - 2T
OF-TK1 - 1765'
WT - 30
MD-RST -
CW/MD - C
CJ-LOS - 0
PJ-DET - 15
POS-ST - dn

12. AX 2
TK-ASN - 2T
OF-TK2 - 3237'
WT - 31
MD-RST -
CW/MD -
CJ-LOS - 0
PJ-DET - 15
POS-ST - dn

13. AX 3
TK-ASN - NA
OF-TK1 - NA
WT -
MD-RST -
CW/MD -
CJ-LOS - 0
PJ-DET - 15
POS-ST - dn

17. MDR-AX - n
OF-TK -
CJ-LOS -
PJ-DET -

18. MD-TMR
TK.1 -
TK.2 - 10

19. MIN-WT - 0

20. FS-DET - 0

48. PF-ENA - UP

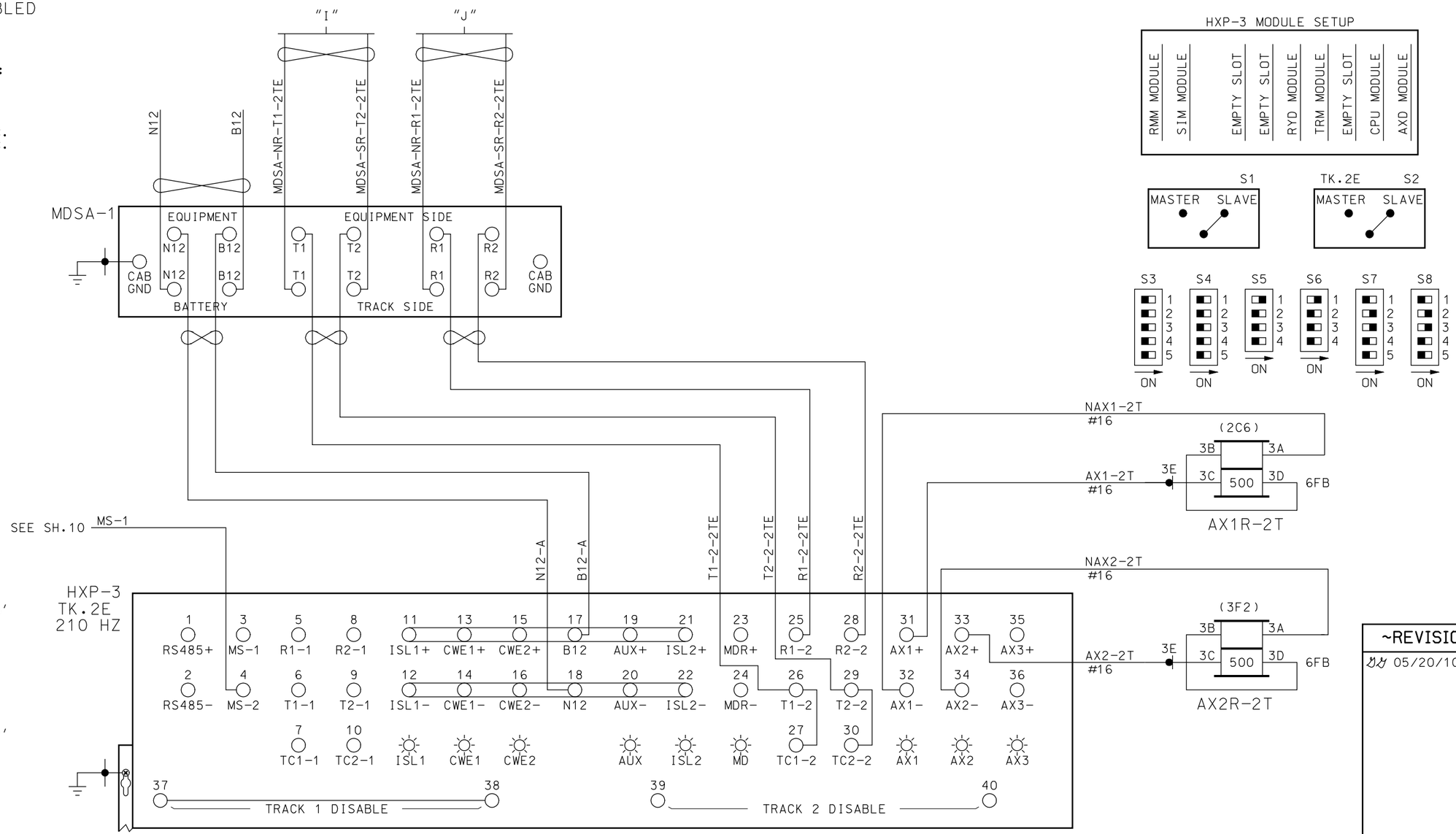

ALL WIRING ON THIS SHEET
#10 AWG UNLESS NOTED

~REVISIONS~
GY 05/20/10 OK WK

Metra SIGNAL ENGINEERING
CHICAGO, ILLINOIS

CHICAGO TO JOLIET
GRESHAM JCT. - WEST HOUSE
HXP-3 TK.2E

REFERENCE:			DATE:
10.45 SH.1 THRU SH.82			03/01/10
DESIGNED	DRAWN	CHECKED	APPROVED
ALSTOM	ALSTOM	GY	WK
DISTRICT	PRINT NUMBER		
RI	10.45 SH.11		

21-MAY-2010 13:45

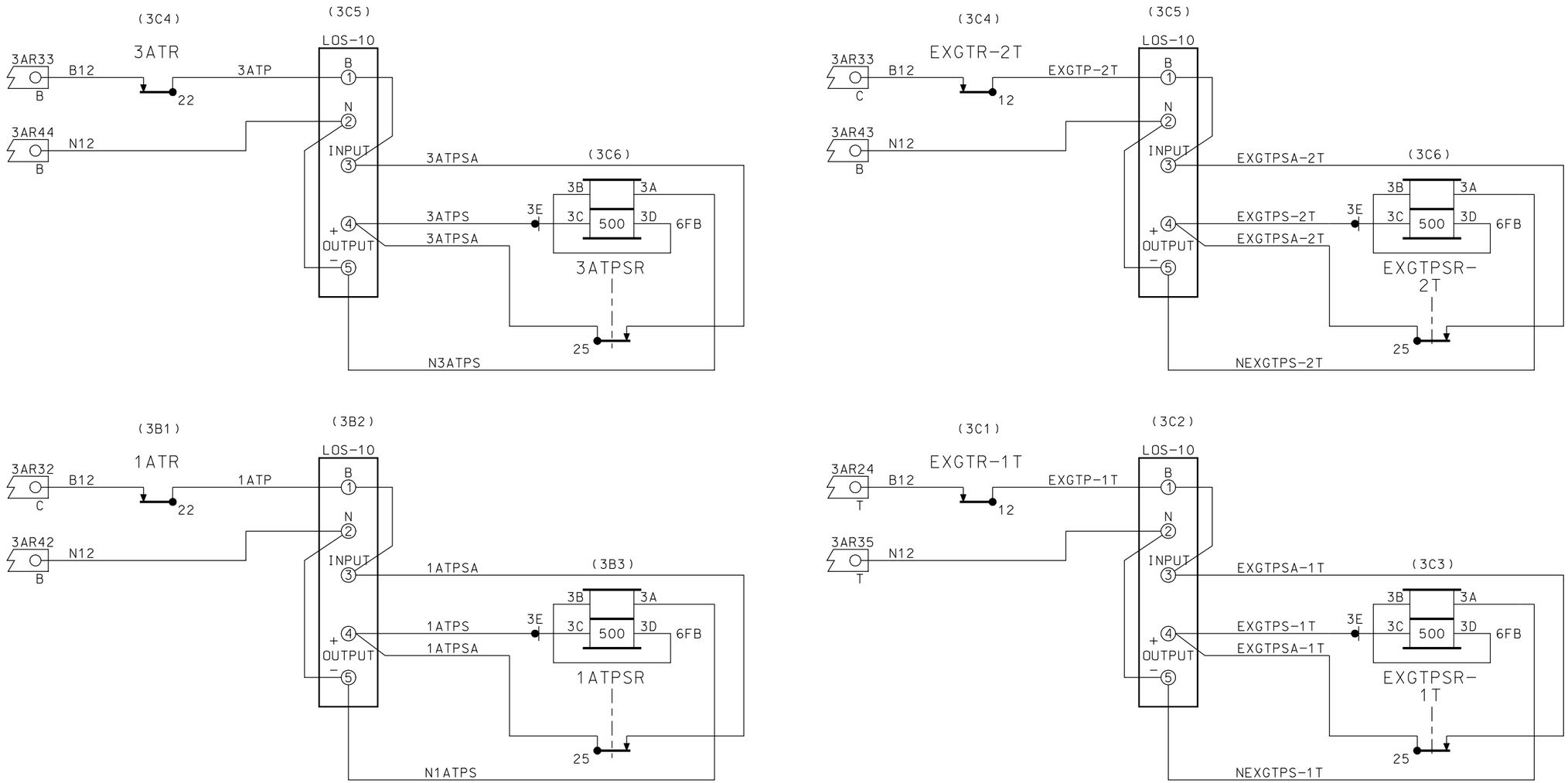

~REVISIONS~

ALL WIRING ON THIS SHEET
#16 AWG UNLESS NOTED

Metra SIGNAL ENGINEERING
CHICAGO, ILLINOIS

CHICAGO TO JOLIET
GRESHAM JCT. - WEST HOUSE
LOS CIRCUITS

REFERENCE:	DATE:
10.45 SH.1 THRU SH.82	03/01/10

DESIGNED	DRAWN	CHECKED	APPROVED
ALSTOM	ALSTOM	DJ	WK

DISTRICT	PRINT NUMBER
RI	10.45 SH.12

19-MAY-2010 10:57

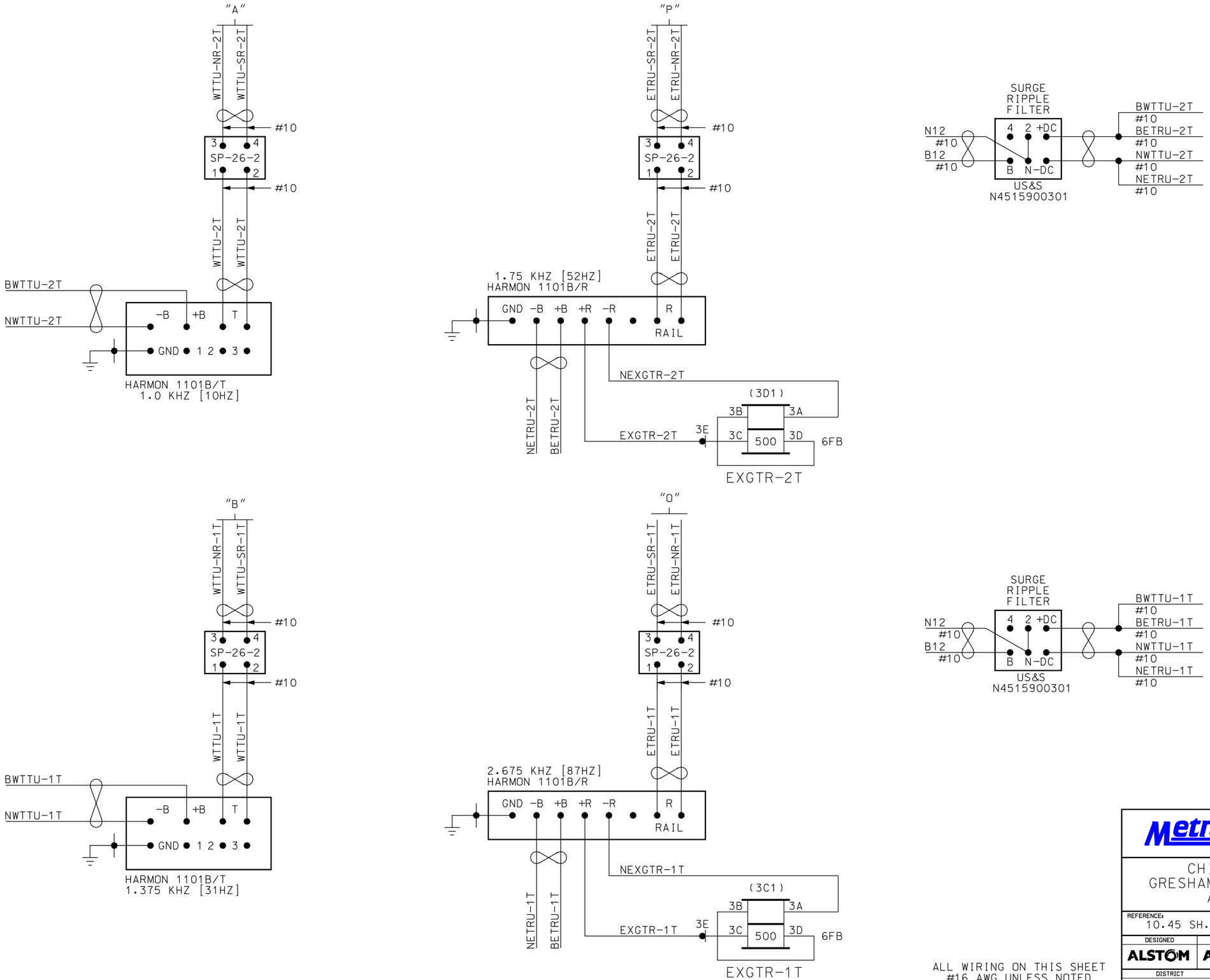

~REVISIONS~

ALL WIRING ON THIS SHEET
#16 AWG UNLESS NOTED

Metra SIGNAL ENGINEERING
CHICAGO, ILLINOIS

CHICAGO TO JOLIET
GRESHAM JCT. - WEST HOUSE
AFTAC CIRCUITS

REFERENCE:			DATE:
10.45 SH.1 THRU SH.82			03/01/10
DESIGNED	DRAWN	CHECKED	APPROVED
ALSTOM	ALSTOM	GG	WK
DISTRICT	PRINT NUMBER		
RI	10.45 SH.13		

19-MAY-2010 10:57

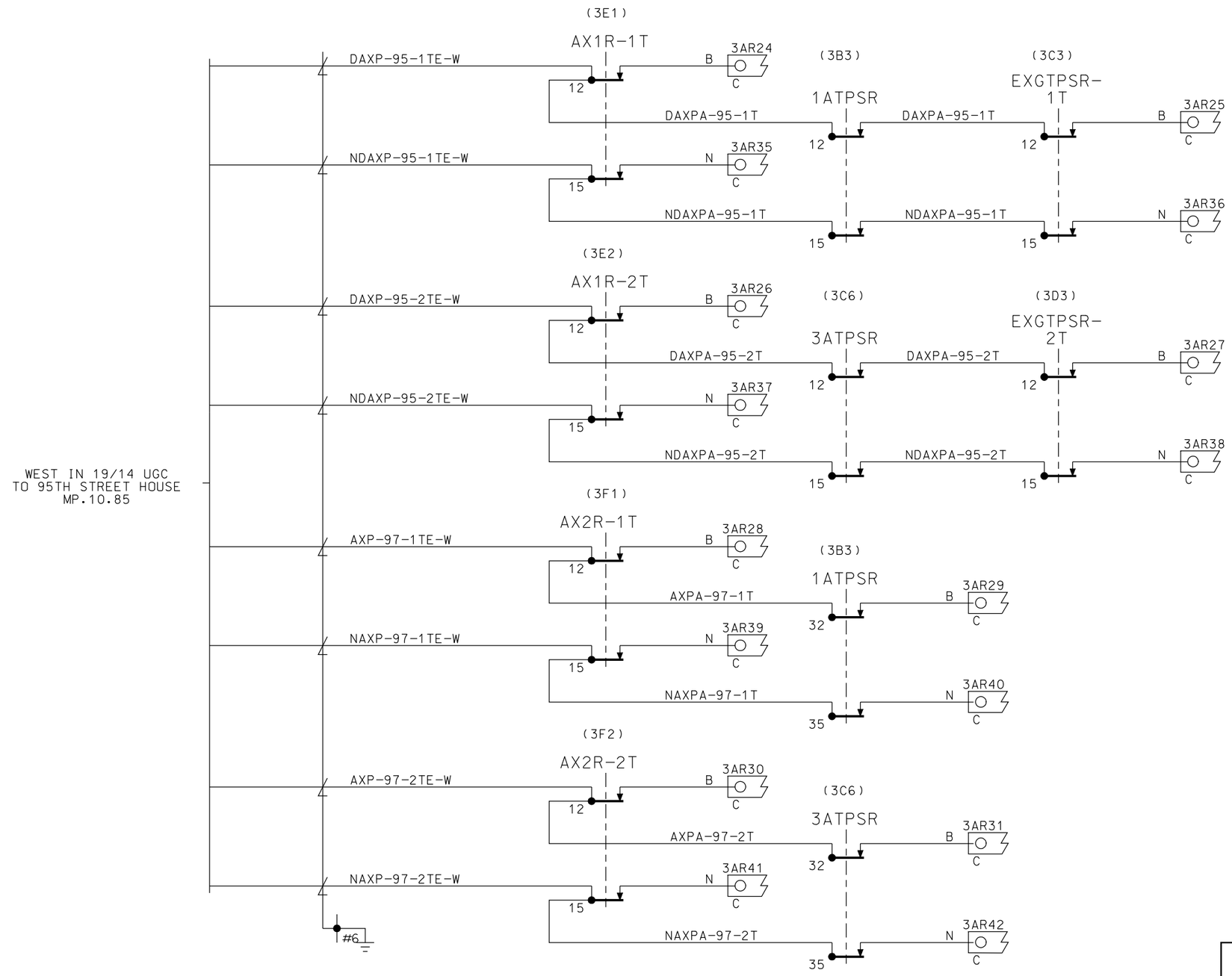

ALL WIRING ON THIS SHEET
#16 AWG UNLESS NOTED

~REVISIONS~

GY 05/20/10 OK WK

Metra SIGNAL ENGINEERING
CHICAGO, ILLINOIS

CHICAGO TO JOLIET
GRESHAM JCT. - WEST HOUSE
LINE CIRCUITS

REFERENCE:			DATE:
10.45 SH.1 THRU SH.82			03/01/10
DESIGNED	DRAWN	CHECKED	APPROVED
ALSTOM	ALSTOM	GY	WK
DISTRICT	PRINT NUMBER		
RI	10.45 SH.14		

21-MAY-2010 13:45

RACK 3

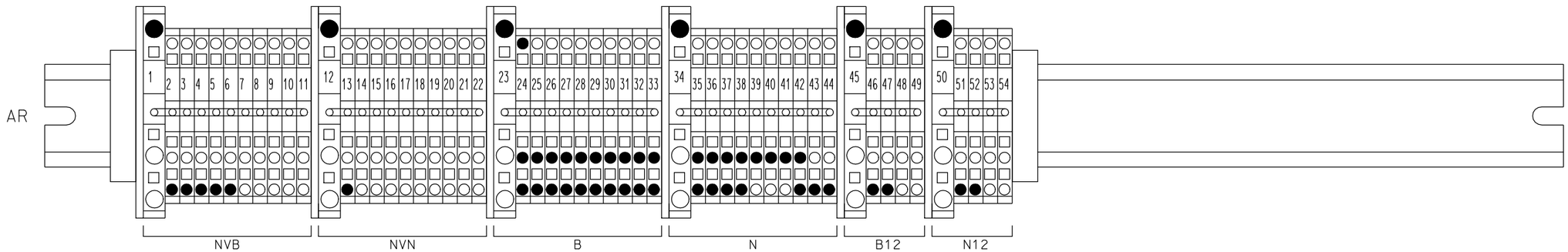

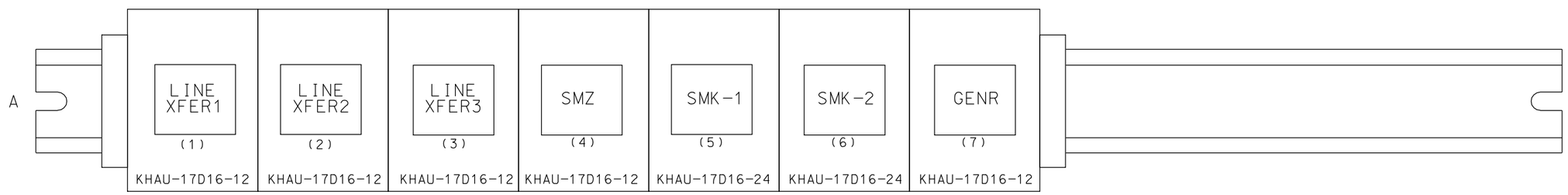

~REVISIONS~

GG 05/20/10 OK WK

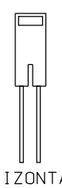

WAGO HORIZONTAL JUMPER

RAIL MOUNTED RELAY MODULE
(FRONT VIEW)

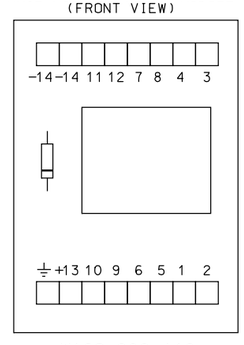

WAGO 288-112

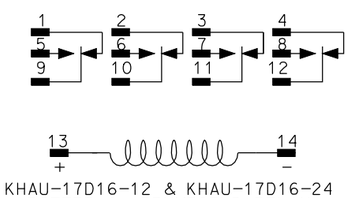

KHAU-17D16-12 & KHAU-17D16-24
POTTER & BRUMFIELD RELAY

NOTE:
USE WAGO (STEP DOWN) TERMINAL BLOCK JUMPERS BETWEEN DIFFERENT SIZE BLOCKS (284-414)

= WAGO (ADJACENT) TERMINAL BLOCK JUMPER (280-402)

● = INDICATES TERMINATED WIRE

Metra SIGNAL ENGINEERING
CHICAGO, ILLINOIS

CHICAGO TO JOLIET
GRESHAM JCT. - WEST HOUSE
RACK 3 (ROWS AR & A)

REFERENCE:			DATE:
10.45 SH.1 THRU SH.82			03/01/10
DESIGNED	DRAWN	CHECKED	APPROVED
ALSTOM	ALSTOM	GG	WK
DISTRICT	PRINT NUMBER		
RI	10.45 SH.80		

21-MAY-2010 13:45

RACK 3
(REAR VIEW)

	7	6	5	4	3	2	1
A							
B		10LATR 3E 3C 3A A62-260	1ABTR 3E 3C 3A A62-260	1BT 3E 3C 3A A62-260	1ATPSR 3E 3C 3A A62-262	1AT LOS-10	1ATR 3E 3C 3A A62-260
C	3BTR 3E 3C 3A A62-260	3ATPSR 3E 3C 3A A62-262	3AT LOS-10	3ATR 3E 3C 3A A62-260	EXGTPSR-1T 3E 3C 3A A62-262	EXGT-1T LOS-10	EXGTR-1T 3E 3C 3A A62-262
D					EXGTPSR-2T 3E 3C 3A A62-262	EXGT-2T LOS-10	EXGTR-2T 3E 3C 3A A62-262
E	3RWPR 3E 3C 3A A62-262	3NWPR 3E 3C 3A A62-262	1RWPR 3E 3C 3A A62-262	1NWPR 3E 3C 3A A62-262		AX1R-2T 3E 3C 3A A62-262	AX1R-1T 3E 3C 3A A62-125
F						AX2R-2T 3E 3C 3A A62-262	AX2R-1T 3E 3C 3A A62-125

~REVISIONS~

GY 05/20/10 OK WK

Metra SIGNAL ENGINEERING
CHICAGO, ILLINOIS

CHICAGO TO JOLIET
GRESHAM JCT. - WEST HOUSE
RACK 3 ROWS A, B, C, D, E & F

REFERENCE:	DATE:
10.45 SH.1 THRU SH.82	03/01/10

DESIGNED	DRAWN	CHECKED	APPROVED
ALSTOM	ALSTOM	GY	WK

DISTRICT	PRINT NUMBER
RI	10.45 SH.81

21-MAY-2010 13:45