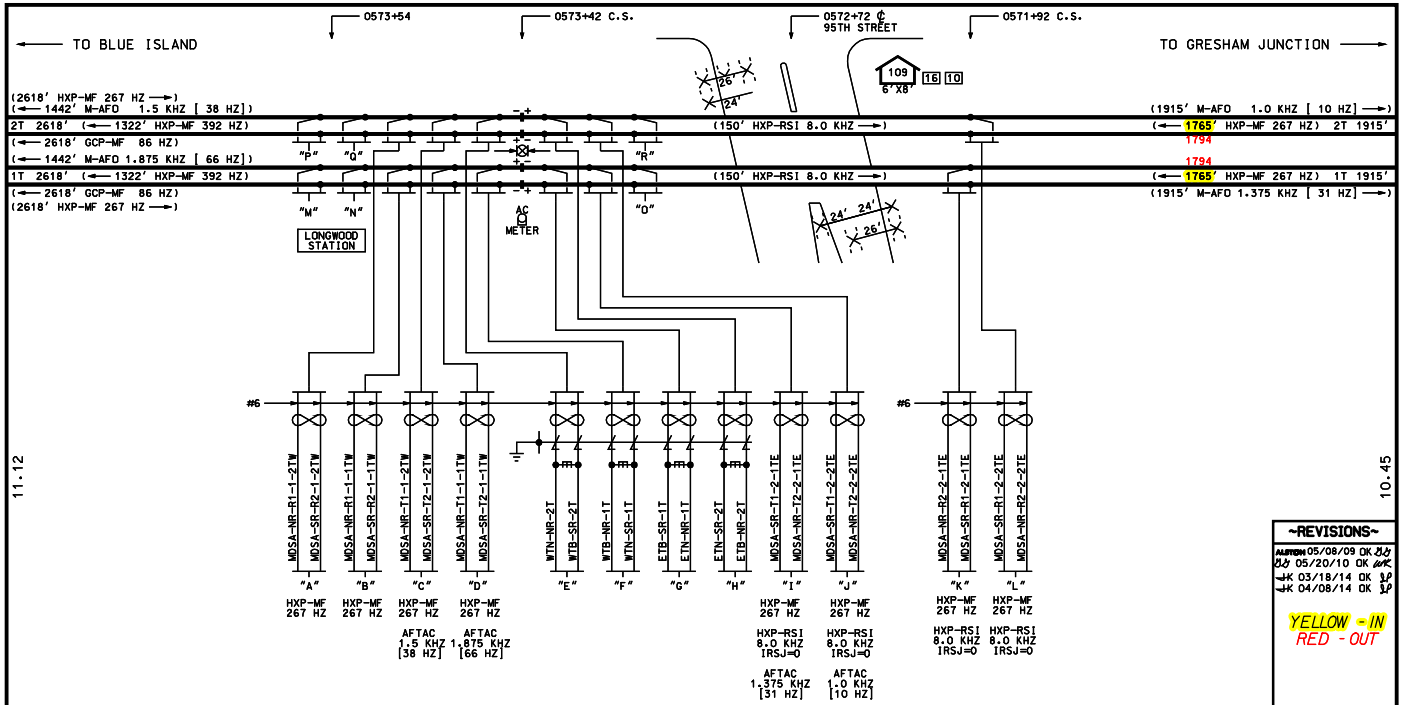

NOTES:

PRIME GROUND

INDICATES LEADS TWISTED IN PAIRS.

INDICATES CANTILEVER SUPPORTED FLASHING LIGHT SIGNAL PER FHWA MUTCD WITH PEDESTRIAN BELL ON BOTH SIGNALS.

INDICATES AUTOMATIC GATE PER FHWA MUTCD.

INDICATES LEADS TO BE WELDED ON RAIL AS CLOSE TOGETHER AS POSSIBLE.

(⟵ 2618' GCP-MF 86 HZ)

- FREQUENCY
- LENGTH OF CIRCUIT
- DIRECTION TO TRANSMITTER

EW & WW APPROACH - 1T & 2T AT 79 MPH			
MIN. WARNING TIME	=	26 SEC *	25 SEC
REACTION TIME	=	5 SEC	
RESPONSE TIME	=	5 SEC	
APPROACH LENGTH	=	4171 FT.	4055 FT.
* IDOT SIMULTANEOUS PREEMPT	=	26 SEC	25 SEC

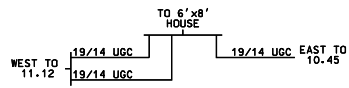

~REVISIONS~

ALSTOM 05/08/09 OK BY
BY 05/20/10 OK WK
WK 03/18/14 OK KP
WK 04/08/14 OK KP

YELLOW - IN
RED - OUT

CREW
04/08/14

DOT#609-011A

Metra SIGNAL ENGINEERING CHICAGO, ILLINOIS

CHICAGO TO JOLIET
95TH STREET, CHICAGO, IL
PLAN VIEW

REFERENCED: 10.85 SH.1 THRU SH.14			DATE: 09/17/02
DESIGNED	DRAWN	CHECKED	APPROVED
SSC	SSC	[illegible]	WK
DISTRICT	PRINT NUMBER		
RI	10.85 SH.1		

15-APR-2014 10:08

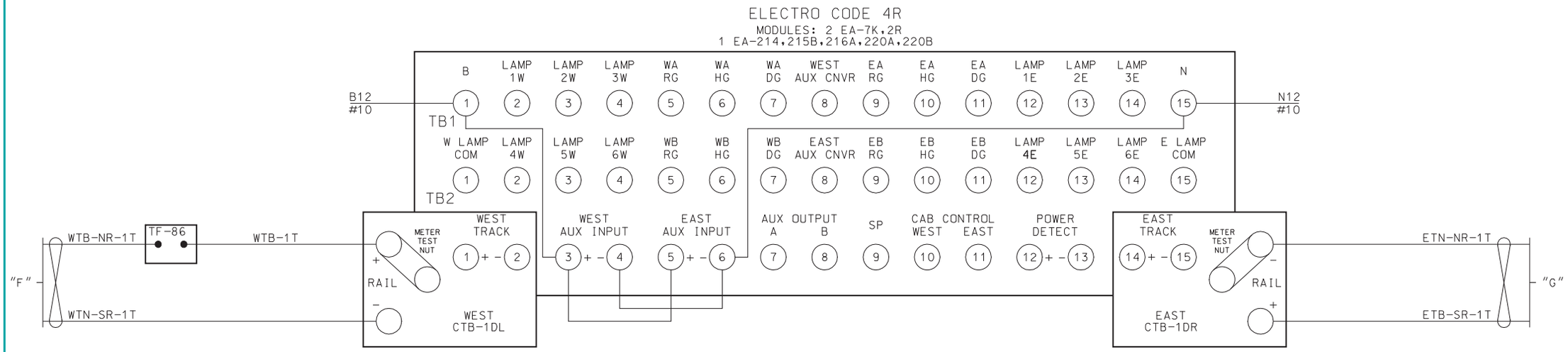

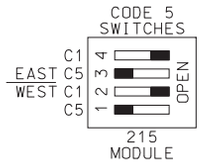

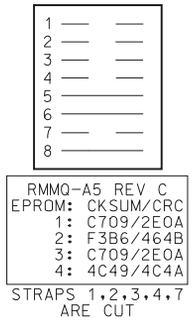

ALL WIRING ON THIS SHEET
#10 AWG UNLESS NOTED

~REVISIONS~

05/29/08 OK

Metra SIGNAL ENGINEERING
CHICAGO, ILLINOIS

CHICAGO TO JOLIET
95TH STREET, CHICAGO, IL
ELECTRO CODE REPEATER TRACK 1

REFERENCE:			DATE:
10.85 SH.1 THRU SH.14			09/17/02
DESIGNED	DRAWN	CHECKED	APPROVED
SSC	SSC		
DISTRICT	PRINT NUMBER		
RI	10.85 SH.2		

$$$$filename$$$$

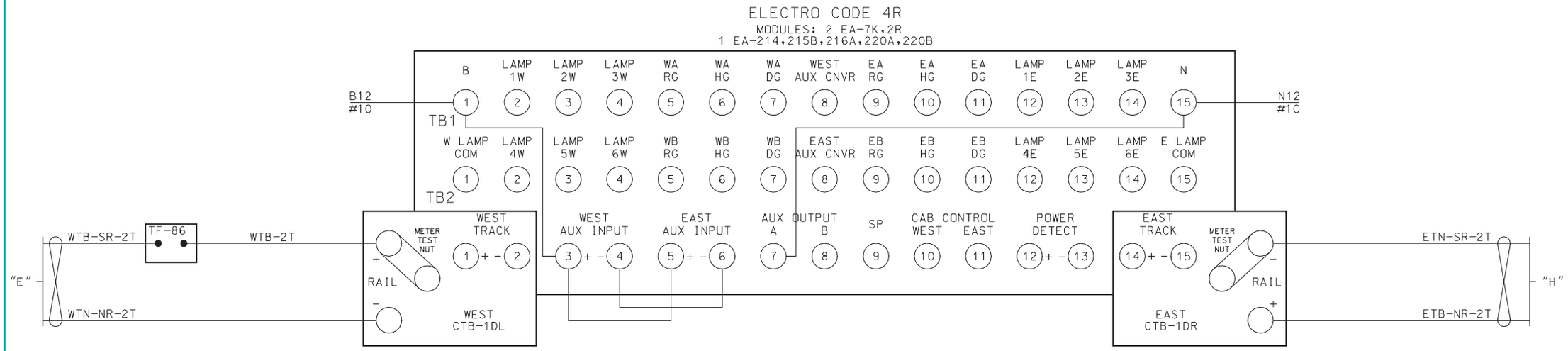

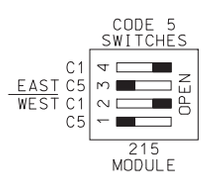

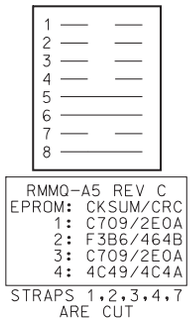

ALL WIRING ON THIS SHEET
#10 AWG UNLESS NOTED

~REVISIONS~

05/29/08 OK

Metra SIGNAL ENGINEERING
CHICAGO, ILLINOIS

CHICAGO TO JOLIET
95TH STREET, CHICAGO, IL
ELECTRO CODE REPEATER TRACK 2

REFERENCE:	DATE:
10.85 SH.1 THRU SH.14	09/17/02

DESIGNED	DRAWN	CHECKED	APPROVED
SSC	SSC		

DISTRICT	PRINT NUMBER
RI	10.85 SH.3

TK.1 = TK. 1 WEST
TK.2 = TK. 1 EAST

ADJUST SEL
APPROACH LENGTH:
TK.1 - 2602'
TK.2 - 1794'

WARNING TIME:
TK.1 - 31 SEC.30 SEC.
TK.2 - 31 SEC.30 SEC.

MD RESTART:
TK.1 - 50
TK.2 - 50

OPTIONS
1. TK-ENA:
TK.1 - UP
TK.2 - UP

2. TK FO
TK.1 - STRAP
TK.2 - STRAP

3. CW/MD
TK.1 - C
TK.2 - C

4. UNI-BI
TK.1 - b
TK.2 - b

6. CWEWT
TK.1 - 80
TK.2 - 80

7. LOS
TK.1 - 16
TK.2 - 16

8. IJ-LOS
TK.1 - 5
TK.2 - 5

11. AX 1
TK-ASN - 2
OF-TK - 1472'
WT - 31
MD-RST - 50
CW/MD - C
CJ-LOS - 0
PJ-DET - 15
POS-ST - dn

12. AX 2
TK-ASN - 2
OF-TK - 2768'
WT - 31
MD-RST - 10
CW/MD - C
CJ-LOS - 0
PJ-DET - 15
POS-ST - dn

13. AX 3
TK-ASN -
OF-TK -
WT -
MD-RST -
CW/MD -
CJ-LOS - 0
PJ-DET - 15
POS-ST - dn

17. MDR-AX - n

18. MD-TMR
TK.1 - 10
TK.2 - 10

19. MIN-WT - 0

20. FS-DET - 0

48. PF-ENA - UP

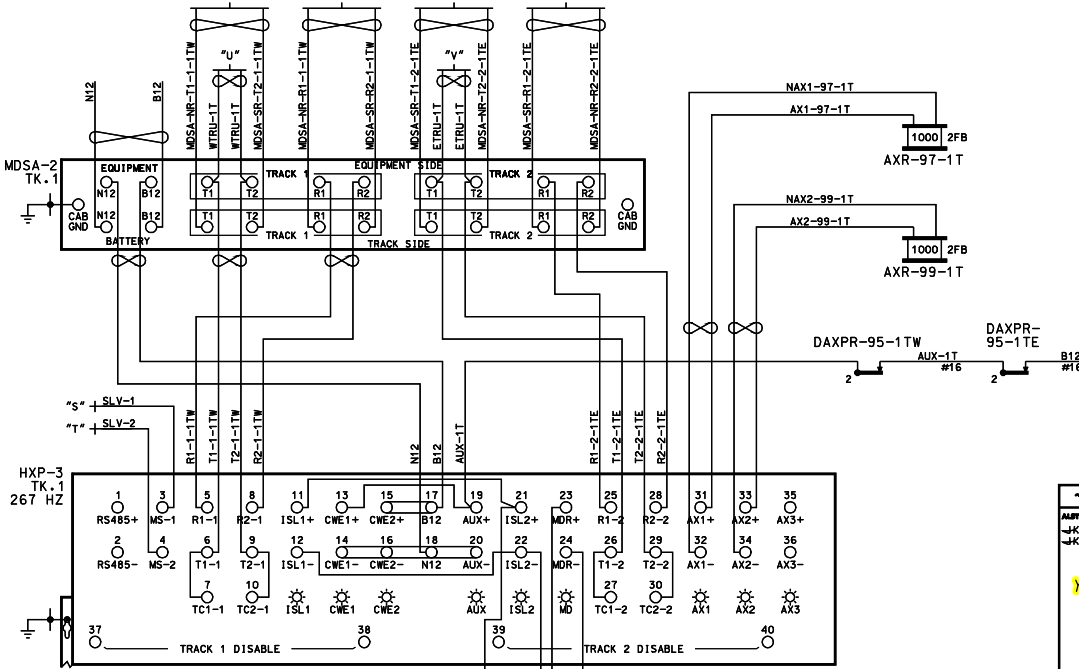

~REVISIONS~
ALSTOM 05/08/09 OK
JK 03/18/14 OK
JK 04/08/14 OK

YELLOW - IN
RED - OUT

CREW
04/08/14

Metra SIGNAL ENGINEERING
CHICAGO, ILLINOIS

CHICAGO TO JOLIET
95TH STREET, CHICAGO, IL
HXP-3 TRACK 1

REFERENCE: 10.85 SH.1 THRU SH.14			DATE: 09/17/02
DESIGNED	DRAWN	CHECKED	APPROVED
SSC	SSC		
DISTRICT	PRINT NUMBER		
RI	10.85 SH.4		

15-APR-2014 14:08

TK.1 = TK. 2 WEST
TK.2 = TK. 2 EAST

ADJUST SEL
- APPROACH LENGTH:
  - TK.1 - 2602'
  - TK.2 - 1794'
- WARNING TIME:
  - TK.1 - 31 SEC.30 SEC.
  - TK.2 - 31 SEC.30 SEC.
- MD RESTART:
  - TK.1 - 50
  - TK.2 - 50

OPTIONS
1. TK-ENA:
   - TK.1 - UP
   - TK.2 - UP
2. TK FO
   - TK.1 - STRAP
   - TK.2 - STRAP
3. CW/MD
   - TK.1 - C
   - TK.2 - C
4. UNI-BI
   - TK.1 - b
   - TK.2 - b
6. CWEWT
   - TK.1 - 80
   - TK.2 - 80
7. LOS
   - TK.1 - 16
   - TK.2 - 16
8. IJ-LOS
   - TK.1 - 5
   - TK.2 - 5
11. AX 1
    - TK-ASN - 2
    - OF-TK - 1472'
    - WT - 31
    - MD-RST - 50
    - CW/MD - C
    - CJ-LOS - 0
    - PJ-DET - 15
    - POS-ST - dn
12. AX 2
    - TK-ASN - 2
    - OF-TK - 2786'
    - WT - 31
    - MD-RST - 10
    - CW/MD - C
    - CJ-LOS - 0
    - PJ-DET - 15
    - POS-ST - dn
13. AX 3
    - TK-ASN -
    - OF-TK -
    - WT -
    - MD-RST -
    - CW/MD -
    - CJ-LOS - 0
    - PJ-DET - 15
    - POS-ST - dn
17. MDR-AX - A
18. MD-TMR
    - TK.1 - 10
    - TK.2 - 10
19. MIN-WT - 0
20. FS-DET - 0
48. PF-ENA - UP

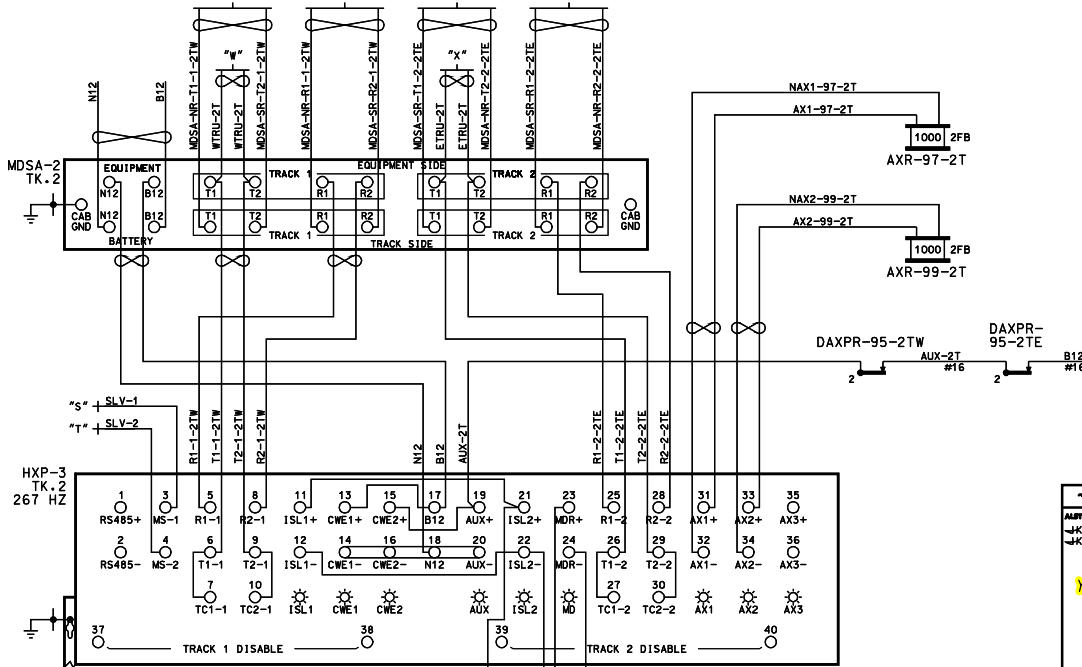

HXP-3 MODULE SETUP

RMM MODULE	SIM MODULE	TRM MODULE	EMPTY SLOT	RYD MODULE	TRM MODULE	RSI MODULE	CPU MODULE	AXD MODULE

RSI MODULE SLOT 7
FREQ. 8.0 KHZ
LOS JUMPER = 0
FAULT JUMPER = 0

ALL WIRING ON THIS SHEET
#10 AWG UNLESS NOTED

~REVISIONS~

ALSTOM 05/08/09 OK
JK 03/18/14 OK
JK 04/08/14 OK

YELLOW - IN
RED - OUT

CREW
04/08/14

Metra SIGNAL ENGINEERING
CHICAGO, ILLINOIS

CHICAGO TO JOLIET
95TH STREET, CHICAGO, IL
HXP-3 TRACK 2

REFERENCE	DATE
10.85 SH.1 THRU SH.14	09/17/02

DESIGNED	DRAWN	CHECKED	APPROVED
SSC	SSC		

DISTRICT	PRINT NUMBER
RI	10.85 SH.5

15-APR-2014 14:09

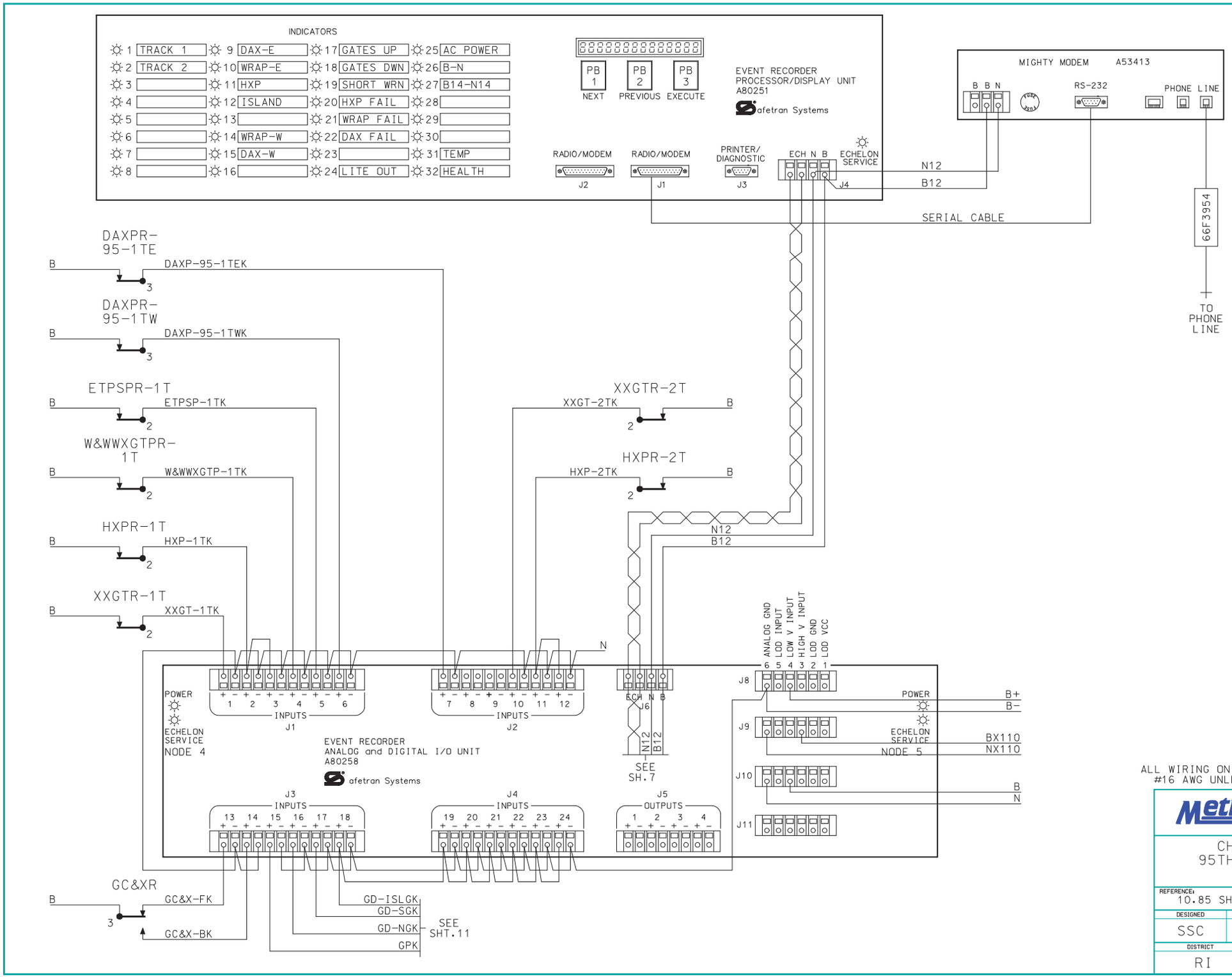

SEA/R PROGRAMMING CHART

CUSTOM FUNCTIONS	
FUNCTION	ON/OFF
1TRACK.ENA	ON
2TRACK.ENA	ON
3TRACK.ENA	OFF
4TRACK.ENA	OFF
5TRACK.ENA	OFF
6TRACK.ENA	OFF
GATEALM.ENA	ON
WRNTIME.ENA	ON
GCPFAIL.ENA	ON
HOLDDWN.ENA	OFF
LOD1.ENA	ON
LOD2.ENA	ON
LOD3.ENA	ON
LOD4.ENA	OFF
ACPOWER.ENA	ON
B12/N12.ENA	ON
B14/N14.ENA	ON
B/N.ENA	ON
MASTER	N/A
SLAVE	N/A

CUSTOM TIMERS	
NAME	TIME
GATENOT.DN TMR	20 SEC.
WRN-1T.TIMER	25 SEC.
WRN-2T.TIMER	25 SEC.
WRN-3T.TIMER	0 SEC.
WRN-4T.TIMER	0 SEC.
WRN-5T.TIMER	0 SEC.
WRN-6T.TIMER	0 SEC.

NODE ASSIGNMENT	
NODE 4	DIGITAL BOARD #1
NODE 5	ANALOG BOARD #1
NODE 6	(NOT USED)
NODE 7	(NOT USED)
NODE 9	DIGITAL BOARD #2
NODE 10	ANALOG BOARD #2
NODE 12	(NOT USED)
NODE 13	(NOT USED)

~REVISIONS~

ALSTOM 05/08/09 OK

ALL WIRING ON THIS SHEET
#16 AWG UNLESS NOTED

Metra SIGNAL ENGINEERING
CHICAGO, ILLINOIS

CHICAGO TO JOLIET
95TH STREET - CHICAGO
DATA RECORDER

REFERENCE:			DATE:
10.85 SH.1 THRU SH.14			09/17/02
DESIGNED	DRAWN	CHECKED	APPROVED
SSC	SSC	[illegible]	[illegible]
DISTRICT	PRINT NUMBER		
RI	10.85 SH.6		

$$$$sytime$$$

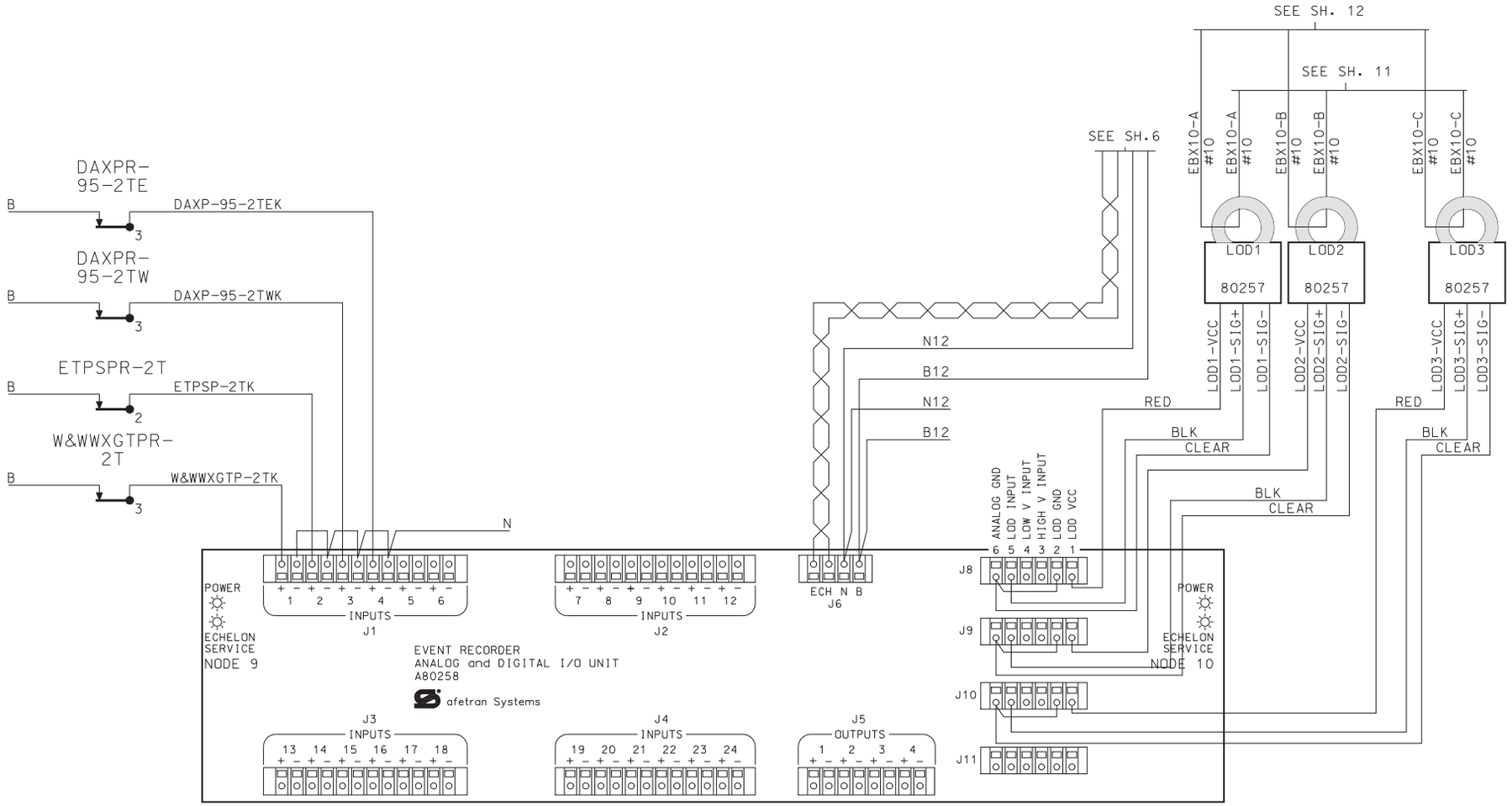

~REVISIONS~

ALSTOM 05/08/09 OK

ALL WIRING ON THIS SHEET
#16 AWG UNLESS NOTED

Metra SIGNAL ENGINEERING
CHICAGO, ILLINOIS

CHICAGO TO JOLIET
95TH STREET - CHICAGO
DATA RECORDER

REFERENCE:			DATE:
10.85 SH.1 THRU SH.14			09/17/02
DESIGNED	DRAWN	CHECKED	APPROVED
SSC	SSC	[illegible]	[illegible]
DISTRICT	PRINT NUMBER		
RI	10.85 SH.7		

$$$$sgtime$$$

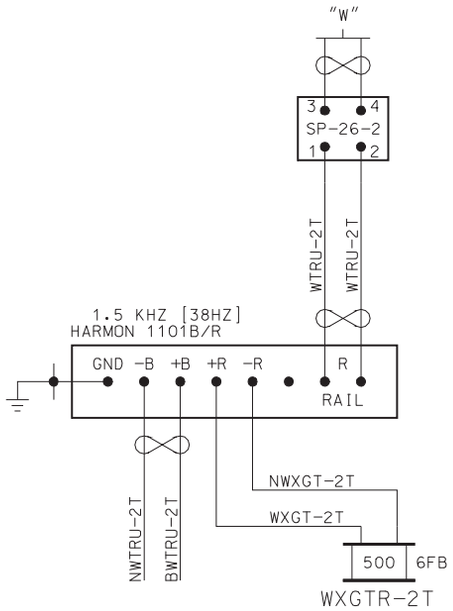

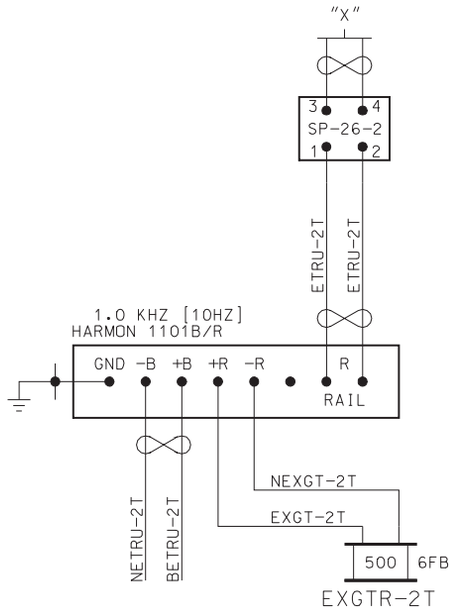

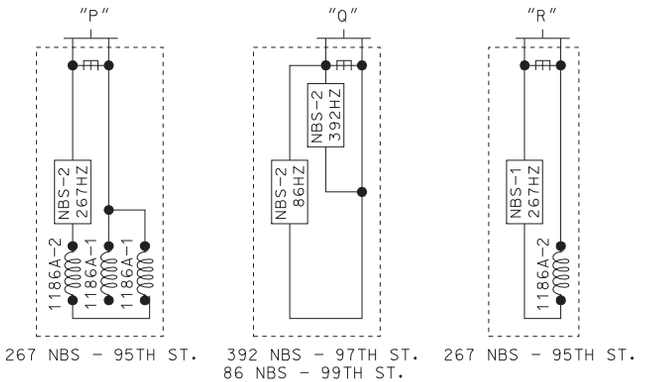

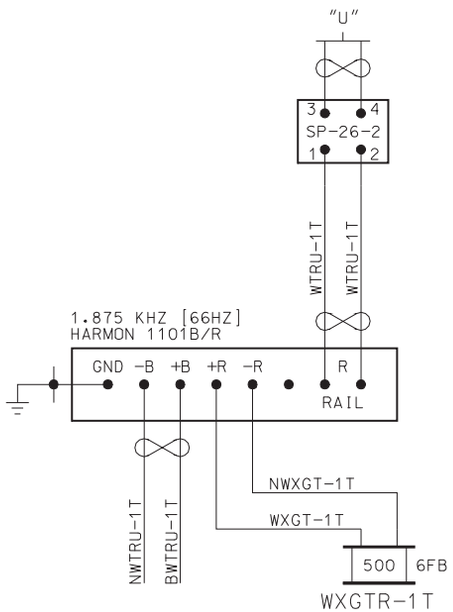

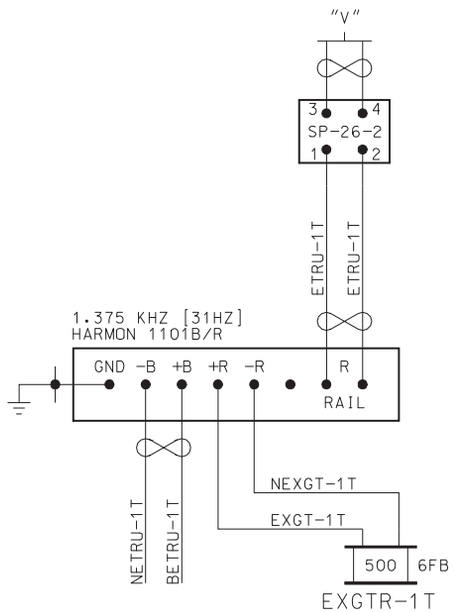

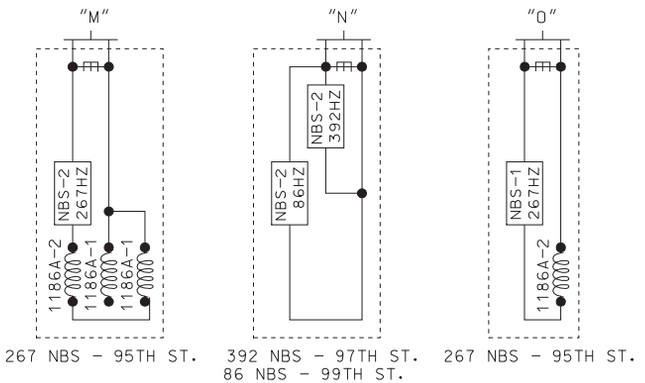

~REVISIONS~

ALSTOM 05/08/09 OK

Metra SIGNAL ENGINEERING
CHICAGO, ILLINOIS

CHICAGO TO JOLIET
95TH STREET, CHICAGO, IL
AFTAC - NBS/D.L.

REFERENCE: 10.85 SH.1 THRU SH.14			DATE: 09/17/02
DESIGNED	DRAWN	CHECKED	APPROVED
	SSC		
DISTRICT	PRINT NUMBER		
RI	10.85 SH.8		

$$$$filenameuit$$$$

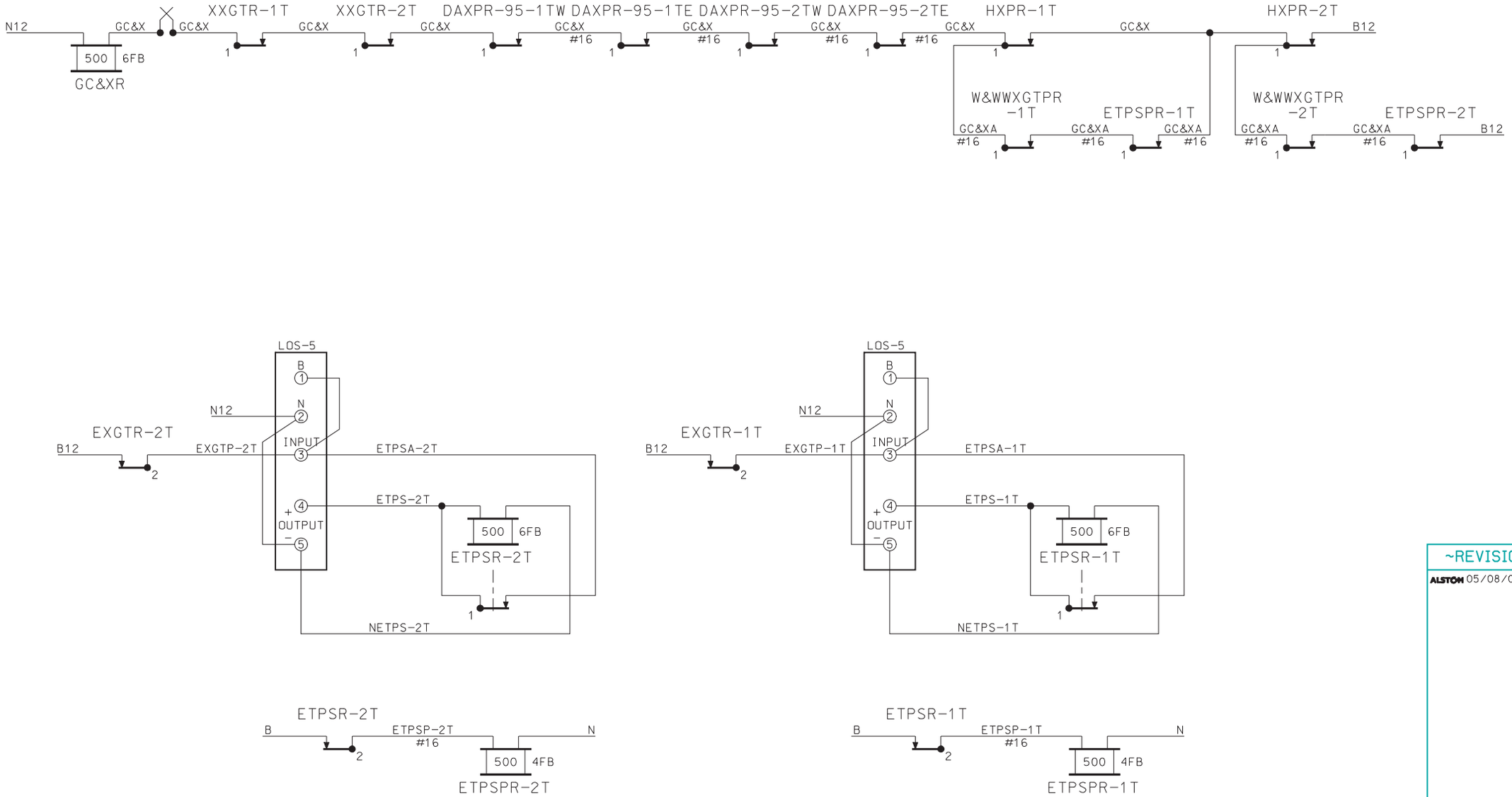

~REVISIONS~

ALSTOM 05/08/09 OK

Metra SIGNAL ENGINEERING
CHICAGO, ILLINOIS

CHICAGO TO JOLIET
95TH STREET, CHICAGO, IL
LOCAL CIRCUITS

REFERENCE:			DATE:
10.85 SH.1 THRU SH.14			09/17/02
DESIGNED	DRAWN	CHECKED	APPROVED
SSC	SSC	[illegible]	[illegible]
DISTRICT	PRINT NUMBER		
RI	10.85 SH.9		

$$$sytimetrix$$$

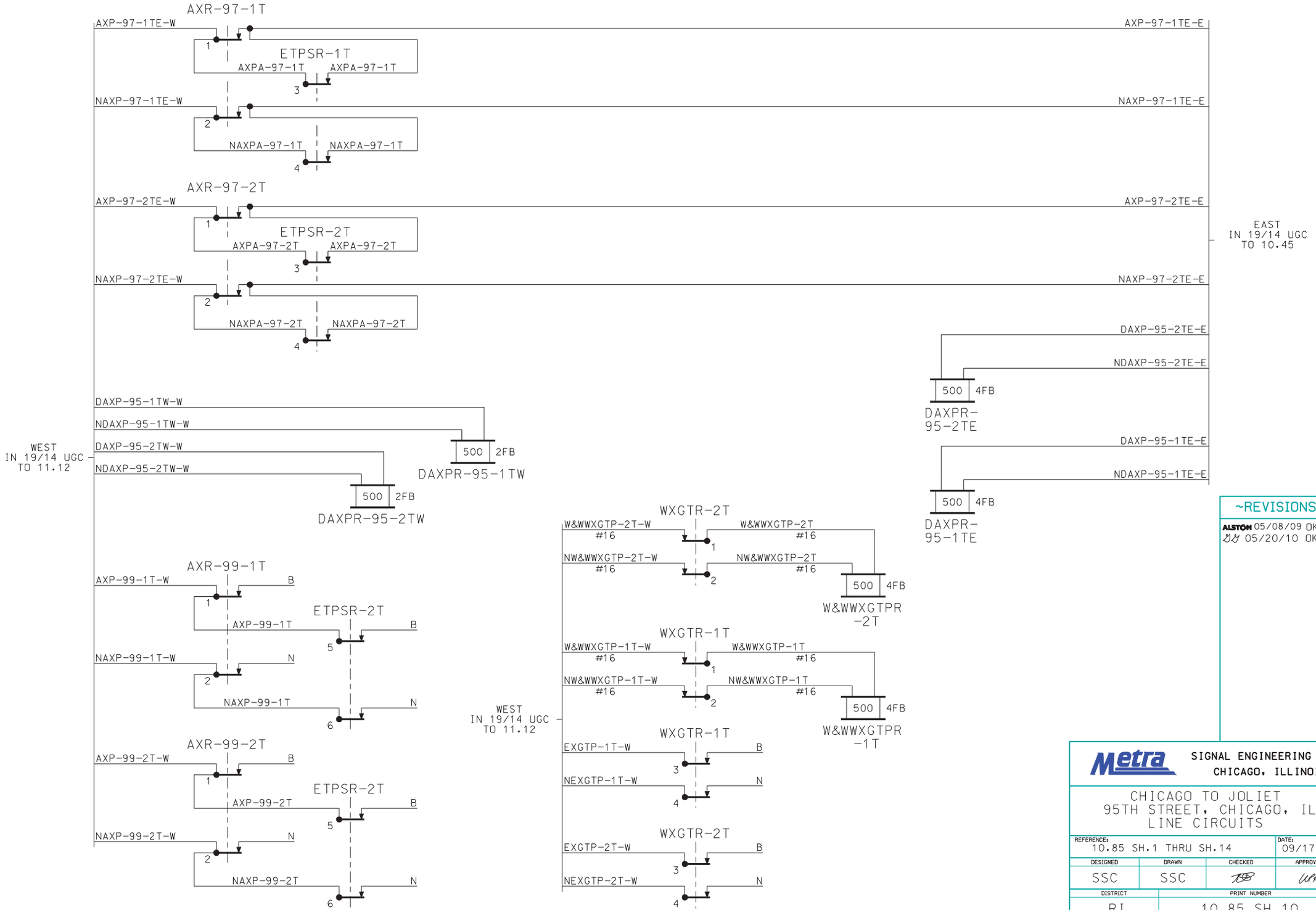

~REVISIONS~

ALSTOM 05/08/09 OK GG
GG 05/20/10 OK WK

Metra SIGNAL ENGINEERING
CHICAGO, ILLINOIS

CHICAGO TO JOLIET
95TH STREET, CHICAGO, IL
LINE CIRCUITS

REFERENCE:			DATE:
10.85 SH.1 THRU SH.14			09/17/02
DESIGNED	DRAWN	CHECKED	APPROVED
SSC	SSC	[illegible]	WK
DISTRICT	PRINT NUMBER		
RI	10.85 SH.10		

$$$$sytimetra$$$

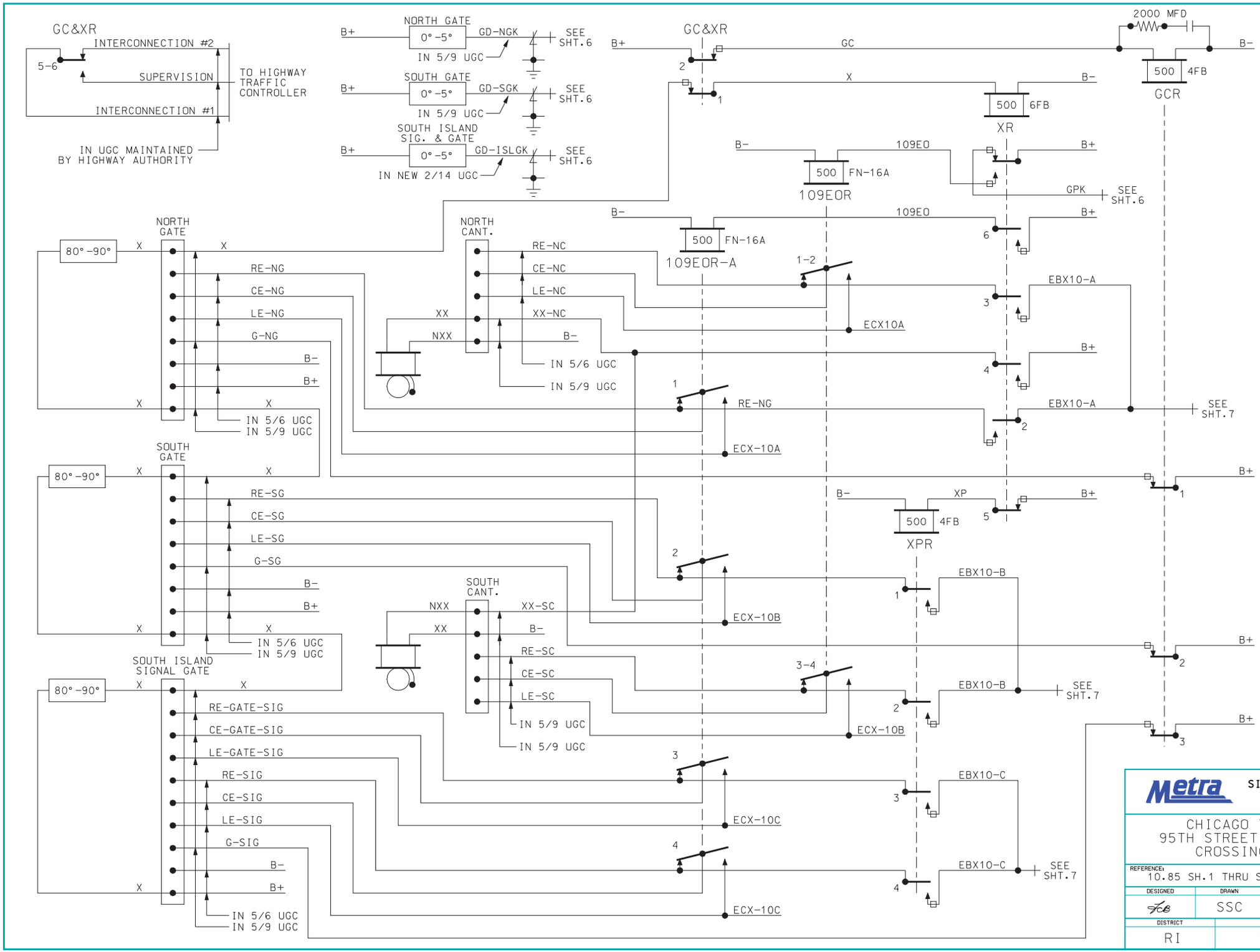

~REVISIONS~

Metra SIGNAL ENGINEERING CHICAGO, ILLINOIS

CHICAGO TO JOLIET
95TH STREET, CHICAGO, IL
CROSSING CONTROL

REFERENCE:			DATE:
10.85 SH.1 THRU SH.14			09/17/02
DESIGNED	DRAWN	CHECKED	APPROVED
FCB	SSC	TB	WPK
DISTRICT	PRINT NUMBER		
RI	10.85 SH.11		

$$$sgtime$$$

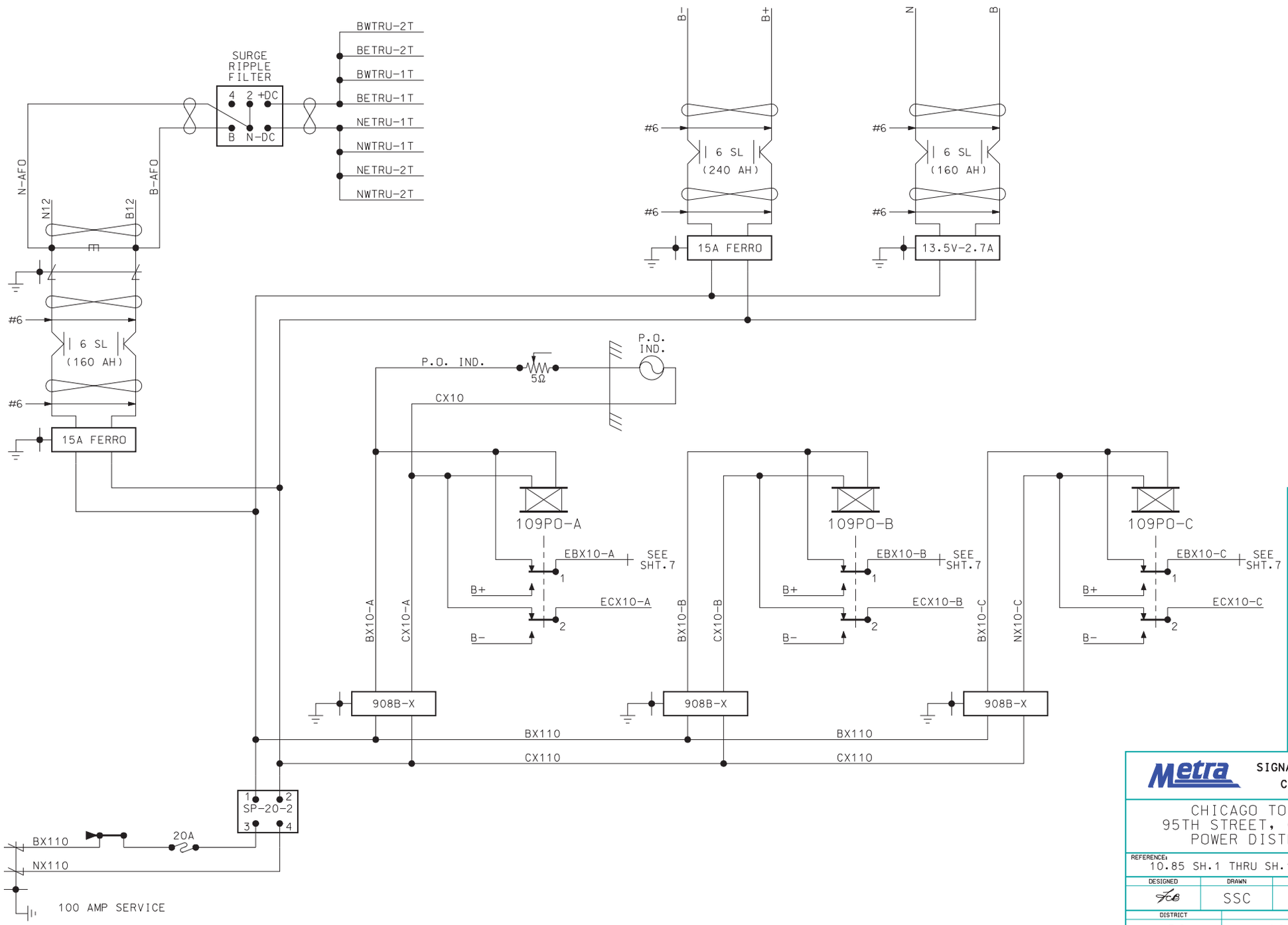

~REVISIONS~

SSC REDRAW PER PROJECT NO. TX3121

Metra SIGNAL ENGINEERING CHICAGO, ILLINOIS

CHICAGO TO JOLIET
95TH STREET, CHICAGO, IL
POWER DISTRIBUTION

REFERENCE:			DATE:
10.85 SH.1 THRU SH.14			09/17/02
DESIGNED	DRAWN	CHECKED	APPROVED
FCB	SSC	TSB	WPK
DISTRICT	PRINT NUMBER		
RI	10.85 SH.12		

$$$$multi$$$$

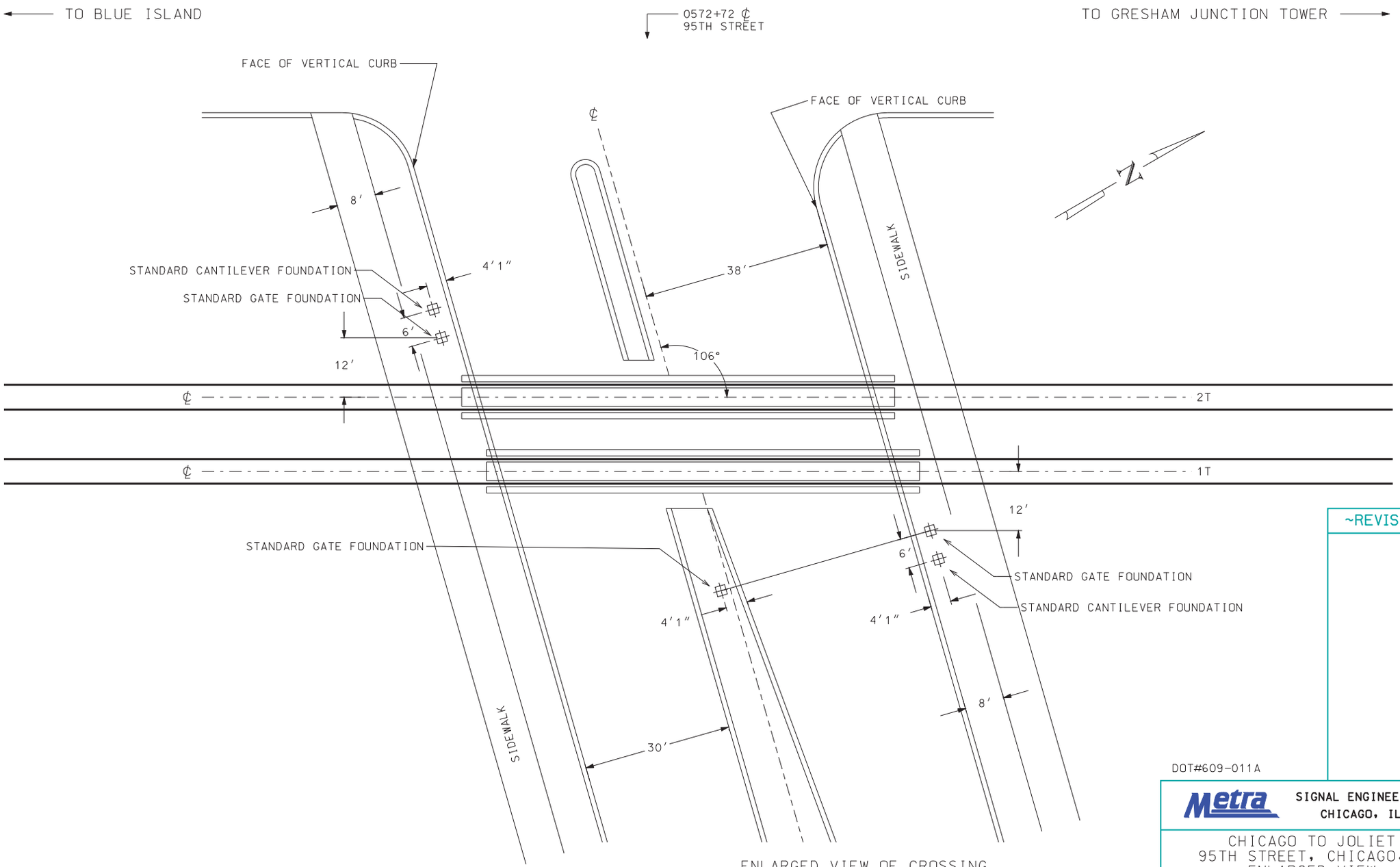

ENLARGED VIEW OF CROSSING
SHOWING LOCATION OF SIGNAL FOUNDATIONS

~ NOT TO SCALE ~

RELAY HOUSE TO BE LOCATED A MINIMUM OF
30 FEET FROM THE EDGE OF THE NEAREST TRAFFIC LANE
AND AN ADEQUATE DISTANCE FROM TRACK IN ORDER TO
REDUCE OBSTRUCTION TO MOTORIST'S SIGHT DISTANCE.

~REVISIONS~

DOT#609-011A

Metra SIGNAL ENGINEERING
CHICAGO, ILLINOIS

CHICAGO TO JOLIET
95TH STREET, CHICAGO, IL
ENLARGED VIEW

REFERENCE:			DATE:
10.85 SH.1 THRU SH.14			09/17/02
DESIGNED	DRAWN	CHECKED	APPROVED
TCB	SSC	TCB	UPK
DISTRICT	PRINT NUMBER		
RI	10.85 SH.13		

$$$plus$$$

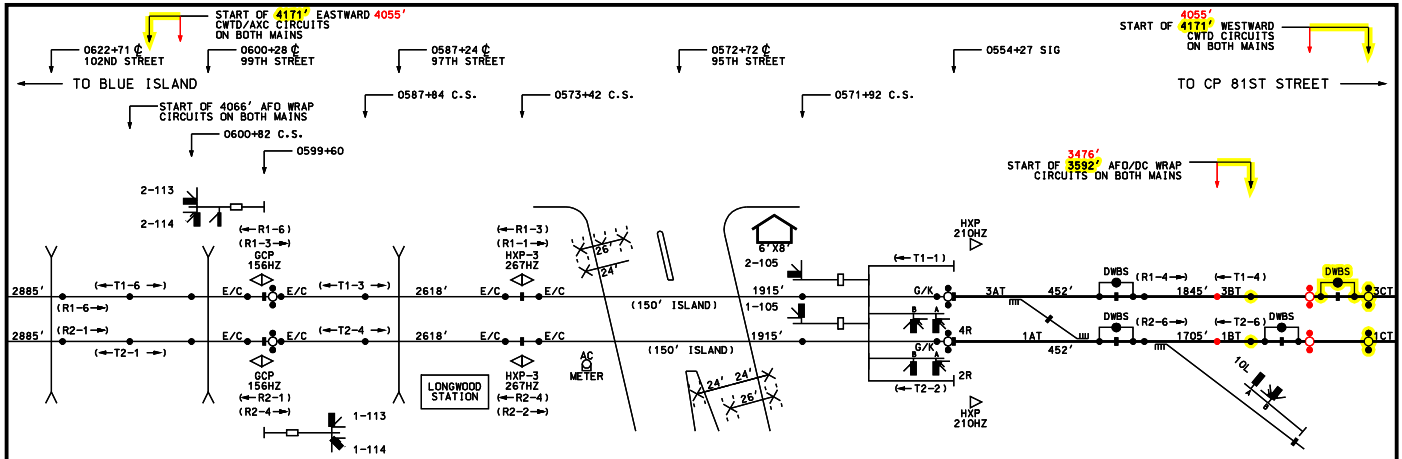

	WIDEBAND SHUNT COUPLER
E/C	ELECTRO PNEUMATIC ELECTRO CODE TRACK CIRCUIT
G/K	GENRAKODE TRACK CIRCUIT
◁	SINGLE DIRECTION APPLICATION
	NARROW BAND SHUNT
◁▷	SEMI-BIDIRECTIONAL APPLICATION
HXP *** HZ	HARMON CROSSING PROCESSOR OPERATION FREQUENCY
GCP **** HZ	GRADE CROSSING PREDICTOR OPERATION FREQUENCY
CWTD	CONSTANT WARNING TIME DEVICE
AFO	AUDIO FREQUENCY OVERLAY
(T)	AFTAC TRANSMITTER
(R)	AFTAC RECEIVER

EW & WW APPROACH - 1T & 2T AT 79 MPH			
MIN. WARNING TIME	=	26 SEC *	25 SEC
REACTION TIME	=	5 SEC	
RESPONSE TIME	=	5 SEC	
APPROACH LENGTH	=	4171 FT.	4055 FT.
* IDOT SIMULTANEOUS PREEMPT = 26 SEC			25 SEC

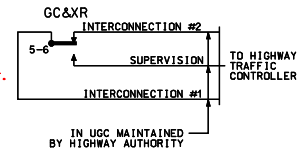

~REVISIONS~

AUSTON 05/08/09 OK
JK 04/08/14 OK

YELLOW - IN
RED - OUT

CREW
04/08/14

DOT# 609-011A

Metra SIGNAL ENGINEERING
CHICAGO, ILLINOIS

CHICAGO TO JOLIET
95TH STREET, CHICAGO, IL
I.C.C. FORM 3 EXHIBIT

REFERENCE			DATE
10.85 SH.1 THRU SH.14			09/17/02
DESIGNED	DRAWN	CHECKED	APPROVED
SSC	SSC		
DISTRICT	PRINT NUMBER		
RI	10.85 SH.14		

15-APR-2014 10:08