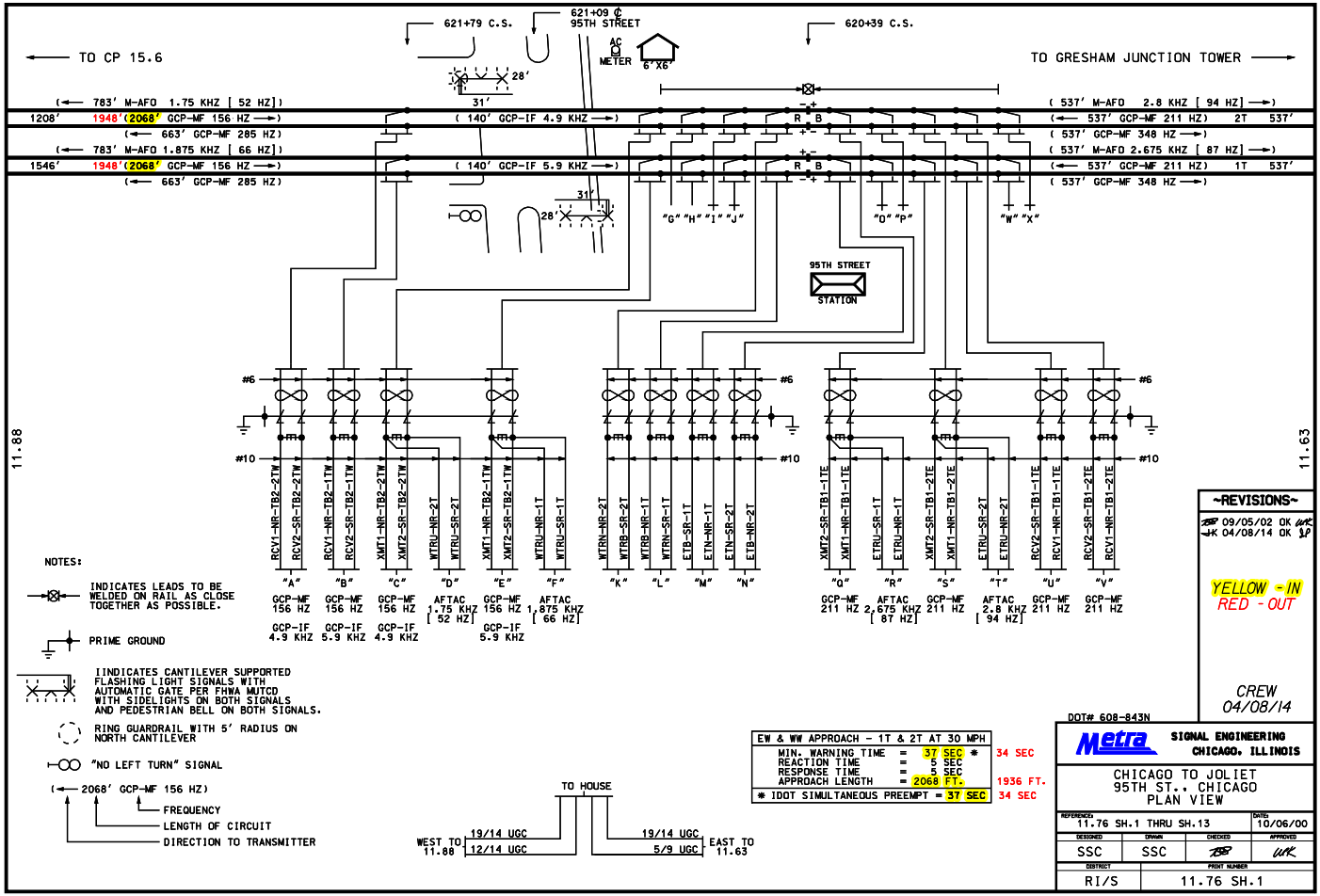
TO CP 15.6
TO GRESHAM JUNCTION TOWER
621+79 C.S.
621+09 ℄ 95TH STREET
620+39 C.S.
AC METER
6' X6'
28'
31'
(← 783' M-AFO 1.75 KHZ [52 HZ])
1208' 1948'(2068' GCP-MF 156 HZ →)
(← 663' GCP-MF 285 HZ)
(← 783' M-AFO 1.875 KHZ [66 HZ])
1546' 1948'(2068' GCP-MF 156 HZ →)
(← 663' GCP-MF 285 HZ)
(140' GCP-IF 4.9 KHZ →)
(140' GCP-IF 5.9 KHZ →)
(537' M-AFO 2.8 KHZ [94 HZ] →)
(← 537' GCP-MF 211 HZ) 2T 537'
(537' GCP-MF 348 HZ →)
(537' M-AFO 2.675 KHZ [87 HZ] →)
(← 537' GCP-MF 211 HZ) 1T 537'
(537' GCP-MF 348 HZ →)
"G" "H" "I" "J"
"O" "P"
"W" "X"
95TH STREET STATION
11.88
11.63
#6
#10
RCV1-NR-TB2-2TW
RCV2-SR-TB2-2TW
RCV1-NR-TB2-1TW
RCV2-SR-TB2-1TW
XMT1-NR-TB2-2TW
XMT2-SR-TB2-2TW
WTRU-NR-2T
WTRU-SR-2T
XMT1-NR-TB2-1TW
XMT2-SR-TB2-1TW
WTRU-NR-1T
WTRU-SR-1T
WTRN-NR-2T
WTRB-SR-2T
WTRB-NR-1T
WTRN-SR-1T
ETB-SR-1T
ETN-NR-1T
ETN-SR-2T
ETB-NR-2T
XMT2-SR-TB1-1TE
XMT1-NR-TB1-1TE
ETRU-SR-1T
ETRU-NR-1T
XMT2-SR-TB1-2TE
XMT1-NR-TB1-2TE
ETRU-SR-2T
ETRU-NR-2T
RCV2-SR-TB1-1TE
RCV1-NR-TB1-1TE
RCV2-SR-TB1-2TE
RCV1-NR-TB1-2TE
"A" GCP-MF 156 HZ GCP-IF 4.9 KHZ
"B" GCP-MF 156 HZ GCP-IF 5.9 KHZ
"C" GCP-MF 156 HZ GCP-IF 4.9 KHZ
"D" AFTAC 1.75 KHZ [52 HZ]
"E" GCP-MF 156 HZ GCP-IF 5.9 KHZ
"F" AFTAC 1.875 KHZ [66 HZ]
"K"
"L"
"M"
"N"
"Q" GCP-MF 211 HZ
"R" AFTAC 2.675 KHZ [87 HZ]
"S" GCP-MF 211 HZ
"T" AFTAC 2.8 KHZ [94 HZ]
"U" GCP-MF 211 HZ
"V" GCP-MF 211 HZ
NOTES:
INDICATES LEADS TO BE WELDED ON RAIL AS CLOSE TOGETHER AS POSSIBLE.
PRIME GROUND
IINDICATES CANTILEVER SUPPORTED FLASHING LIGHT SIGNALS WITH AUTOMATIC GATE PER FHWA MUTCD WITH SIDELIGHTS ON BOTH SIGNALS AND PEDESTRIAN BELL ON BOTH SIGNALS.
RING GUARDRAIL WITH 5' RADIUS ON NORTH CANTILEVER
"NO LEFT TURN" SIGNAL
(← 2068' GCP-MF 156 HZ)
FREQUENCY
LENGTH OF CIRCUIT
DIRECTION TO TRANSMITTER
TO HOUSE
WEST TO 11.88
19/14 UGC
12/14 UGC
19/14 UGC
5/9 UGC
EAST TO 11.63
EW & WW APPROACH - 1T & 2T AT 30 MPH
MIN. WARNING TIME = 37 SEC * 34 SEC
REACTION TIME = 5 SEC
RESPONSE TIME = 5 SEC
APPROACH LENGTH = 2068 FT. 1936 FT.
* IDOT SIMULTANEOUS PREEMPT = 37 SEC 34 SEC
~REVISIONS~
09/05/02 OK
04/08/14 OK
YELLOW - IN
RED - OUT
CREW
04/08/14
DOT# 608-843N
Metra
SIGNAL ENGINEERING
CHICAGO, ILLINOIS
CHICAGO TO JOLIET
95TH ST., CHICAGO
PLAN VIEW
REFERENCE: 11.76 SH.1 THRU SH.13
DATE: 10/06/00
DESIGNED SSC
DRAWN SSC
CHECKED
APPROVED
DISTRICT RI/S
PRINT NUMBER 11.76 SH.1
15-APR-2014 10:52

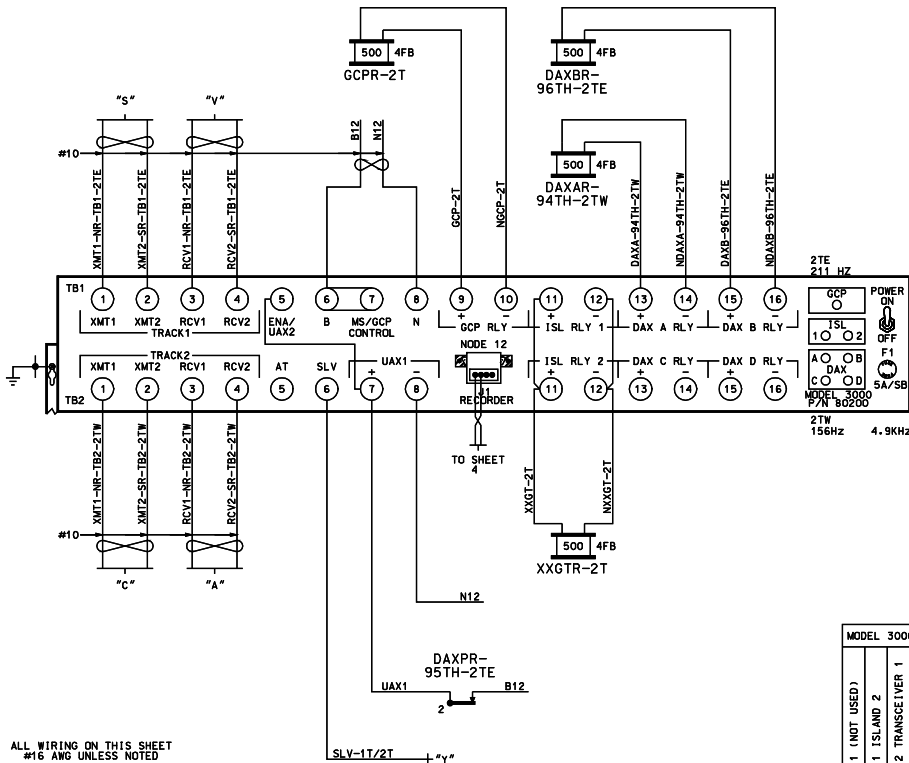

TRK 2
GCP 3000 PROGRAMMING SYSTEM APPLICATION PARAMETERS

	NUMBER OF TRACKS		2	
	FREQUENCY	T1: 211 HZ	T2:156 HZ	
	UNIDIRECTIONAL/BIDIRECTIONAL	T1: BI	T2: BI	
	XMIT LEVEL - MED/HI	T1: HI	T2: HI	
	PREDICTOR/MOTION SENSOR	T1: GCP	T2: GCP	
T1: 39 SEC T2: 44 SEC	WARNING TIME SELECTED	T1: 42 SEC	T2: 42 SEC	
T2:1948 FT	APPROACH DISTANCE	T1: 536 FT	T2:2068 FT	
	UAX PICKUP DELAY (UAX1)	25 SEC.		
	UAX2 DELAY	25 SEC.		
	ISLAND DISTANCE	T1: 0 FT	T2:140	
	NUMBER OF DAX'S	2		
30 SEC.	DAX A TRK/DIST/WARNING TIME	T2	677 FT	30 SEC.
	DAX B TRK/DIST/WARNING TIME	T1	665 FT	27 SEC.
	DAX C TRK/DIST/WARNING TIME	N/A	N/A FT	N/A SEC.
	DAX D TRK/DIST/WARNING TIME	N/A	N/A FT	N/A SEC.
	SLAVING MASTER/SLAVE	MASTER		
	PASSWORD DISABLED/ENABLED	DISABLED		
	RECORDER INSTALLED/NOT INSTALLED	INSTALLED		
	SWITCH TO WS	T1: 10 EZ	T2: 10 EZ	
	TRANSFER DELAY MS TO GCP	T1: 0 SEC.	T2: 0 SEC.	
	PRIME PREDICTION OFFSET	T1: 0 FT	T2: 0 FT	
	PICKUP DELAY PRIME	15 SEC.		
	PICKUP DELAY DAX A	10 SEC. FIXED		
	PICKUP DELAY DAX B	10 SEC. FIXED		
	PICKUP DELAY DAX C	N/A SEC.		
	PICKUP DELAY DAX D	N/A SEC.		
	ENHANCED DETECT MODE	ON		
	BACK TO BACK	YES		
	STATION STOP TIMER	T1: 10 SEC.	T2: 10 SEC.	
	T1 # OF TRACK WIRES 4/6	4		
	T2 # OF TRACK WIRES 4/6	4		
	LOW EX ADJUSTMENT	0		
	LOW EZ DETECTION	T1: OFF	T2: OFF	
	LOW EZ DETECTION TIMER	T1:N/A MIN.	T2:N/A MIN.	
	POSITIVE START (0 = OFF)	T1: OFF EZ	T2: 50 EZ.	
	POSITIVE START TIMEOUT (0 = NONE)	T1:N/A MIN.	T2: 10 MIN.	
	SET AT OPERATION	NORMAL		
	DIAGNOSTIC MESSAGES	ON		
	DAX MESSAGES	ON		
	ADVANCE PREEMPT TIMER	OFF SEC.		
	MOTION SENSING LEVEL	T1: 80%	T2: 80%	

MODEL 3000 GCP MODULE ASSEMBLIES

80211 (NOT USED)	80211 ISLAND 2	80012 TRANSCEIVER 1	80012 TRANSCEIVER 2	80013 RELAY DRIVE	80214 PROCESSOR	80255 REC. INTR.	80016 (1) DAX	80016 (NOT USED)	80020/80019 INTERFACE

~REVISIONS~

09/05/02 OK
K 04/08/14 OK

YELLOW - IN
RED - OUT

CREW
04/08/14

Metra
SIGNAL ENGINEERING
CHICAGO, ILLINOIS

CHICAGO TO JOLIET
95TH ST., CHICAGO
TRACK TWO GCP

REFERENCE:			DATE:
11.76 SH.1 THRU SH.13			10/06/00
DESIGNED	DRAWN	CHECKED	APPROVED
SSC	SSC		
DISTRICT	PRINT NUMBER		
RI/S	11.76 SH.2		

15-APR-2014 11:20:21

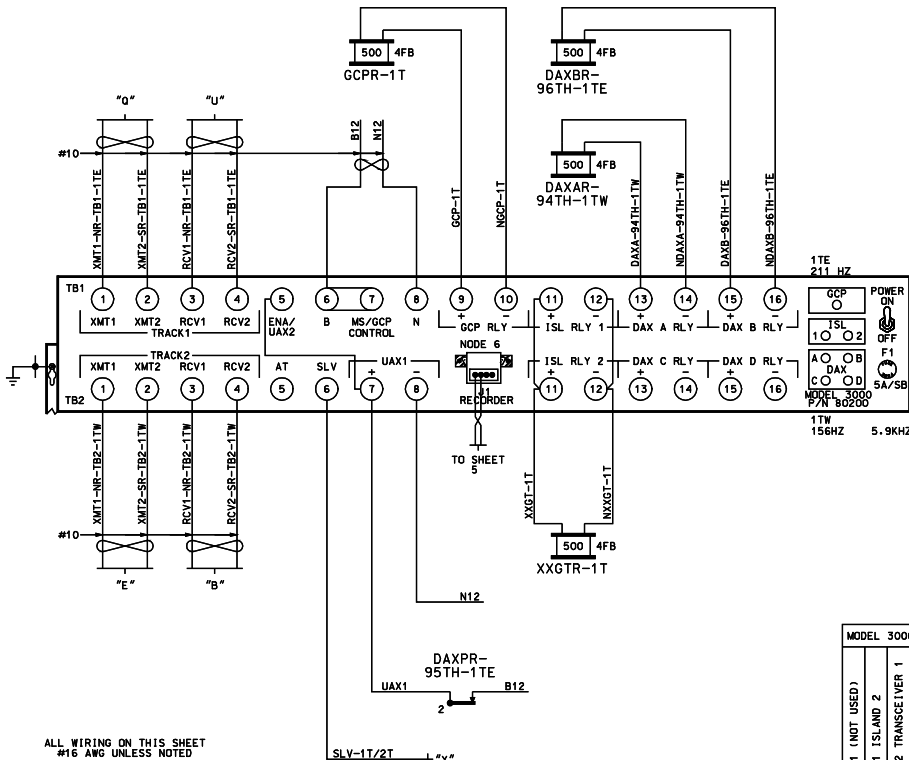

TRK 1

GCP 3000 PROGRAMMING SYSTEM APPLICATION PARAMETERS

NUMBER OF TRACKS		2		
FREQUENCY		T1: 211 HZ	T2:156 HZ	
UNIDIRECTIONAL/BIDIRECTIONAL		T1: B	T2: B	
XMIT LEVEL - MED/HI		T1: HI	T2: HI	
PREDICTOR/MOTION SENSOR		T1: GCP	T2: GCP	
WARNING TIME SELECTED		T1: 42 SEC	T2: 42 SEC	
APPROACH DISTANCE		T1: 536 FT	T2:2068 FT	
UAX PICKUP DELAY (UAX1)		25 SEC.		
UAX2 DELAY		25 SEC.		
ISLAND DISTANCE		T1: 0 FT	T2:140	
NUMBER OF DAX'S		2		
DAX A TRK/DIST/WARNING TIME	T2	677 FT	30 SEC.	
DAX B TRK/DIST/WARNING TIME	T1	663 FT	27 SEC.	
DAX C TRK/DIST/WARNING TIME	N/A	N/A FT	N/A SEC.	
DAX D TRK/DIST/WARNING TIME	N/A	N/A FT	N/A SEC.	
SLAVING MASTER/SLAVE		SLAVE		
PASSWORD DISABLED/ENABLED		DISABLED		
RECORDER INSTALLED/NOT INSTALLED		INSTALLED		
SWITCH TO WS		T1: 10 EZ	T2: 10 EZ	
TRANSFER DELAY MS TO GCP		T1: 0 SEC.	T2: 0 SEC.	
PRIME PREDICTION OFFSET		T1: 0 FT	T2: 0 FT	
PICKUP DELAY PRIME		15 SEC.		
PICKUP DELAY DAX A		10 FIXED SEC.		
PICKUP DELAY DAX B		10 FIXED SEC.		
PICKUP DELAY DAX C		N/A SEC.		
PICKUP DELAY DAX D		N/A SEC.		
ENHANCED DETECT MODE		ON		
BACK TO BACK		YES		
STATION STOP TIMER		T1: 10 SEC.	T2: 10 SEC.	
T1 # OF TRACK WIRES 4/6		4		
T2 # OF TRACK WIRES 4/6		4		
LOW EX ADJUSTMENT		0		
LOW EZ DETECTION		T1: OFF	T2: OFF	
LOW EZ DETECTION TIMER		T1:N/A MIN.	T2:N/A MIN.	
POSITIVE START (0 = OFF)		T1: OFF EZ	T2: 50 EZ	
POSITIVE START TIMEOUT (0 = NONE)		T1:N/A MIN.	T2: 10 MIN.	
SET AT OPERATION		NORMAL		
DIAGNOSTIC MESSAGES		ON		
DAX MESSAGES		ON		
ADVANCE PREEMPT TIMER		OFF SEC.		
MOTION SENSING LEVEL		T1: 80%	T2: 80%	

T1: 39 SEC T2: 44 SEC
T2:1948 FT

30 SEC.

MODEL 3000 GCP MODULE ASSEMBLIES

80211 (NOT USED)	80211 ISLAND 2	80012 TRANSCEIVER 1	80012 TRANSCEIVER 2	80013 RELAY DRIVE	80214 PROCESSOR	80255 REC. INTR.	80016 (1) DAX	80016 (NOT USED)	80020/80019 INTERFACE

~REVISIONS~

09/05/02 OK
K 04/08/14 OK

YELLOW - IN
RED - OUT

CREW
04/08/14

Metra SIGNAL ENGINEERING CHICAGO, ILLINOIS

CHICAGO TO JOLIET
95TH ST., CHICAGO
TRACK ONE GCP

REFERENCE:			DATE:
11.76 SH.1 THRU SH.13			10/06/00
DESIGNED	DRAWN	CHECKED	APPROVED
SSC	SSC		
DISTRICT		PRINT NUMBER	
RI/S		11.76 SH.3	

15-APR-98 11:26

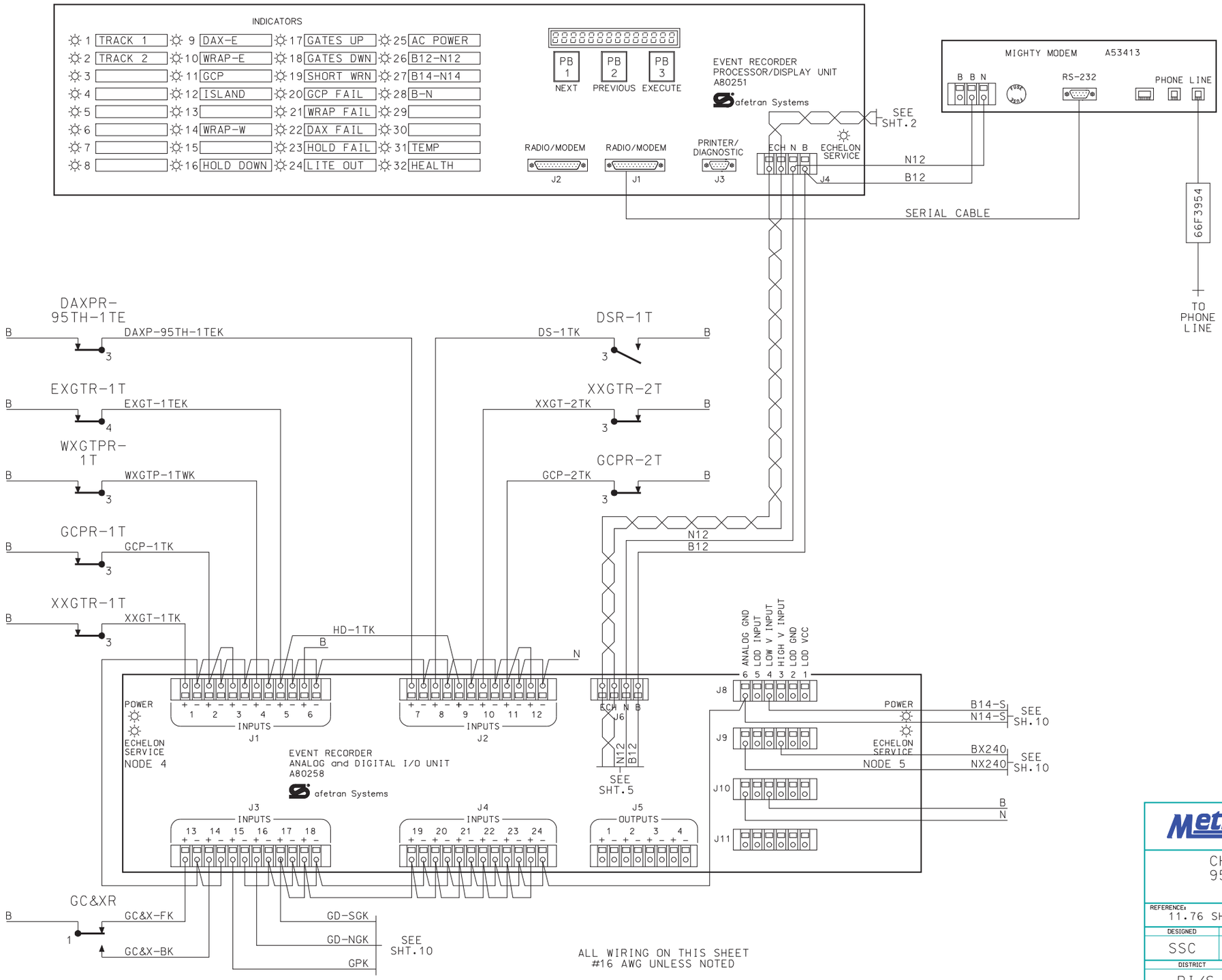

SEA/R PROGRAMMING CHART

CUSTOM FUNCTIONS	
FUNCTION	ON/OFF
1TRACK.ENA	ON
2TRACK.ENA	ON
3TRACK.ENA	OFF
4TRACK.ENA	OFF
5TRACK.ENA	OFF
6TRACK.ENA	OFF
GATEALM.ENA	ON
WRNTIME.ENA	ON
GCPFAIL.ENA	ON
HOLDDWN.ENA	ON
LOD1.ENA	ON
LOD2.ENA	ON
LOD3.ENA	OFF
LOD4.ENA	OFF
ACPOWER.ENA	ON
B12/N12.ENA	ON
B14/N14.ENA	ON
B/N.ENA	ON
MASTER	N/A
SLAVE	N/A

CUSTOM TIMERS	
NAME	TIME
GATENOT.DN TMR	29 SEC.
WRN-1T.TIMER	34 SEC.
WRN-2T.TIMER	34 SEC.
WRN-3T.TIMER	0 SEC.
WRN-4T.TIMER	0 SEC.
WRN-5T.TIMER	0 SEC.
WRN-6T.TIMER	0 SEC.

NODE ASSIGNMENT	
NODE 4	DIGITAL BOARD #1
NODE 5	ANALOG BOARD #1
NODE 6	GCP TRK #1
NODE 7	(NOT USED)
NODE 9	DIGITAL BOARD #2
NODE 10	ANALOG BOARD #2
NODE 12	GCP TRK #2
NODE 13	(NOT USED)

~REVISIONS~

01/27/03 OK

Metra SIGNAL ENGINEERING CHICAGO, ILLINOIS

CHICAGO TO JOLIET
95TH ST., CHICAGO
DATA RECORDER

REFERENCE: 11.76 SH.1 THRU SH.13			DATE: 09/05/02
DESIGNED	DRAWN	CHECKED	APPROVED
SSC	SSC		
DISTRICT	PRINT NUMBER		
RI/S	11.76 SH.4		

$$$$signum$$$$

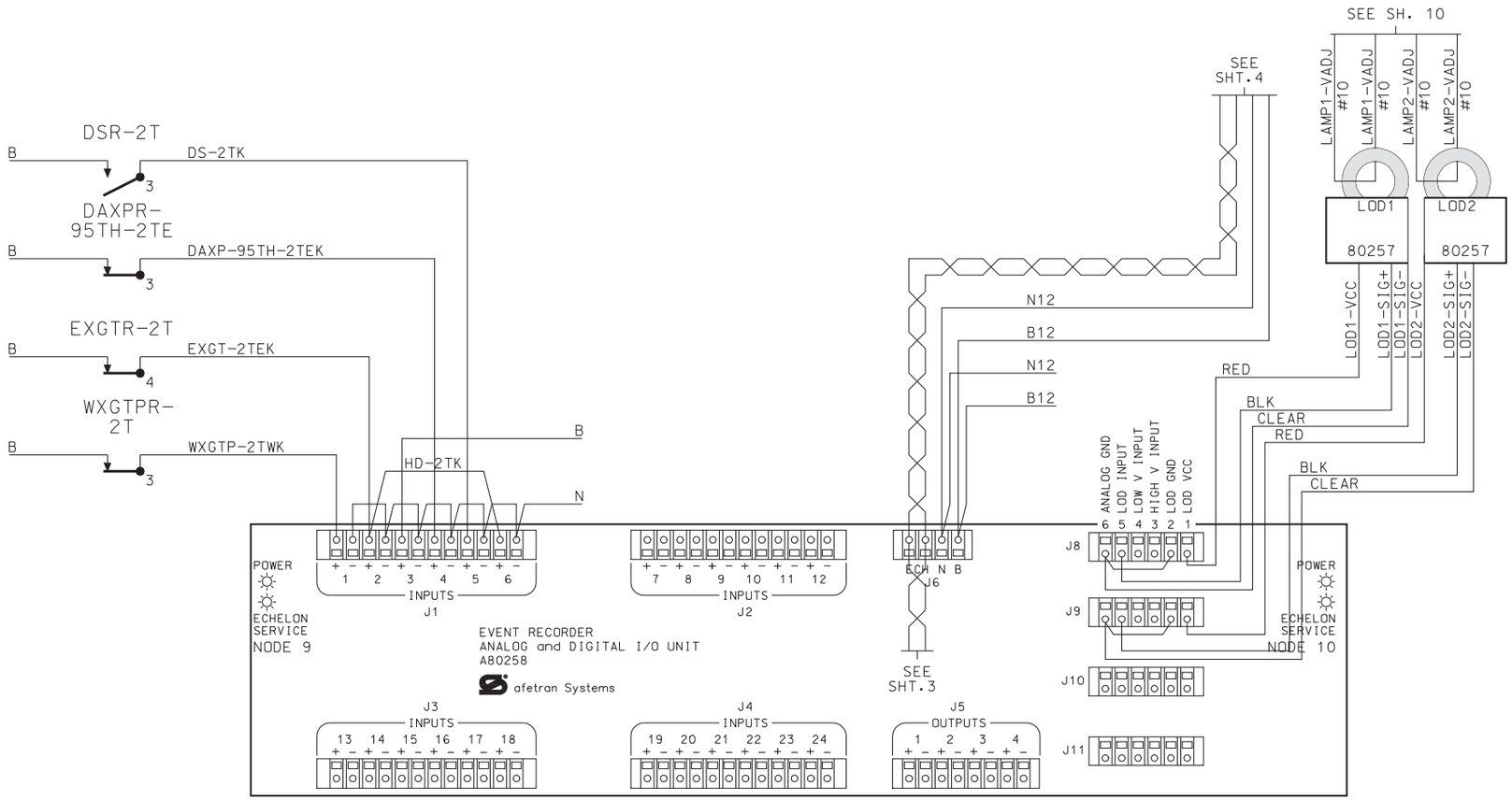

ALL WIRING ON THIS SHEET
#16 AWG UNLESS NOTED

~REVISIONS~

Metra SIGNAL ENGINEERING
CHICAGO, ILLINOIS

CHICAGO TO JOLIET
95TH ST., CHICAGO
DATA RECORDER

REFERENCE:			DATE:
11.76 SH.1 THRU SH.13			09/05/02
DESIGNED	DRAWN	CHECKED	APPROVED
SSC	SSC	TS	WK
DISTRICT	PRINT NUMBER		
RI/S	11.76 SH.5		

$$$signum$$$

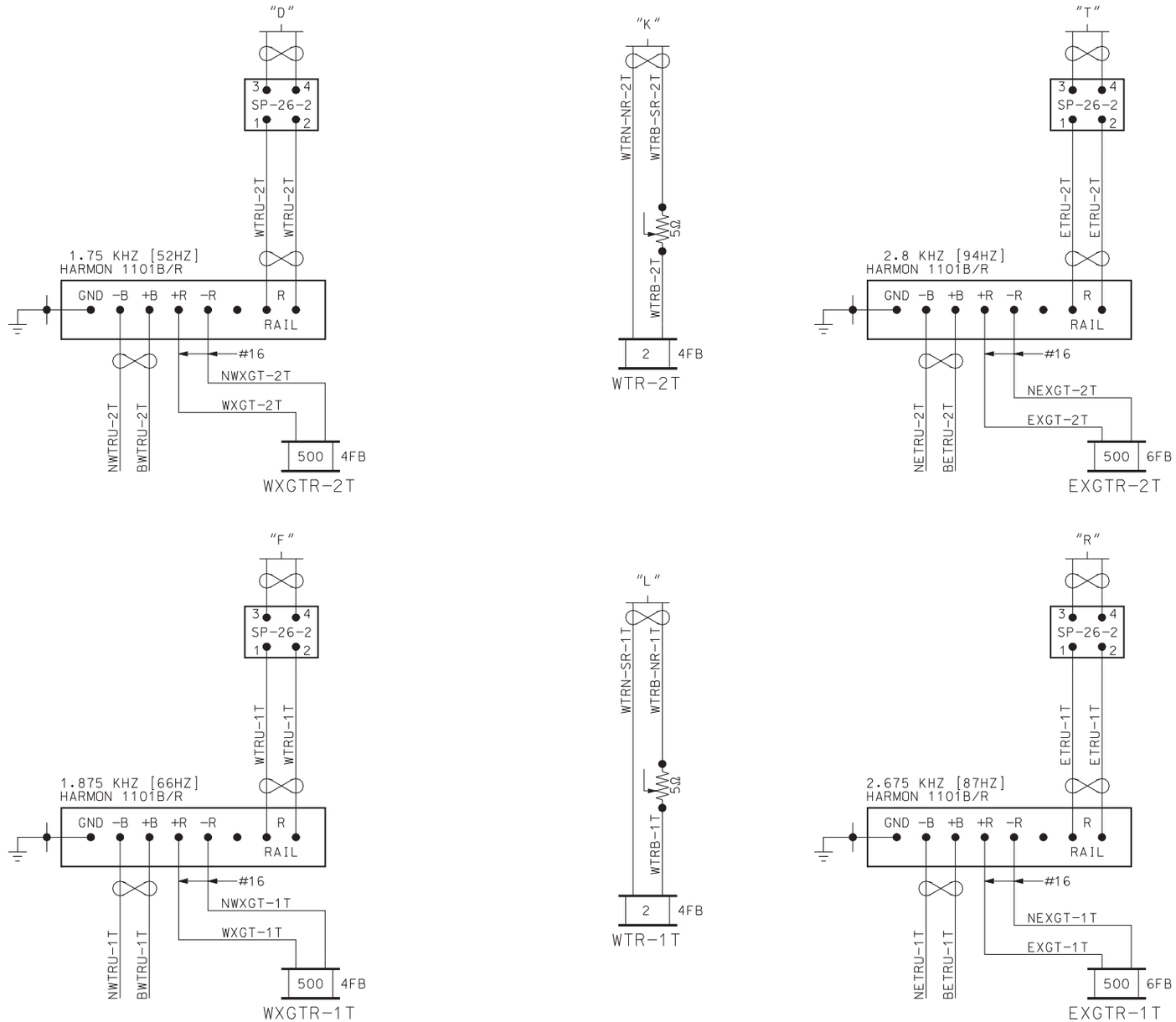

NOTES:

ALL WIRING ON THIS SHEET
#10 AWG UNLESS NOTED

~REVISIONS~

Metra SIGNAL ENGINEERING
CHICAGO, ILLINOIS

CHICAGO TO JOLIET
95TH ST., CHICAGO
AFTAC & TRACK CIRCUITS

REFERENCE:			DATE:
11.76 SH.1 THRU SH.13			09/05/02
DESIGNED	DRAWN	CHECKED	APPROVED
SSC	SSC	[illegible]	[illegible]
DISTRICT	PRINT NUMBER		
RI/S	11.76 SH.6		

$$$sytime$$$

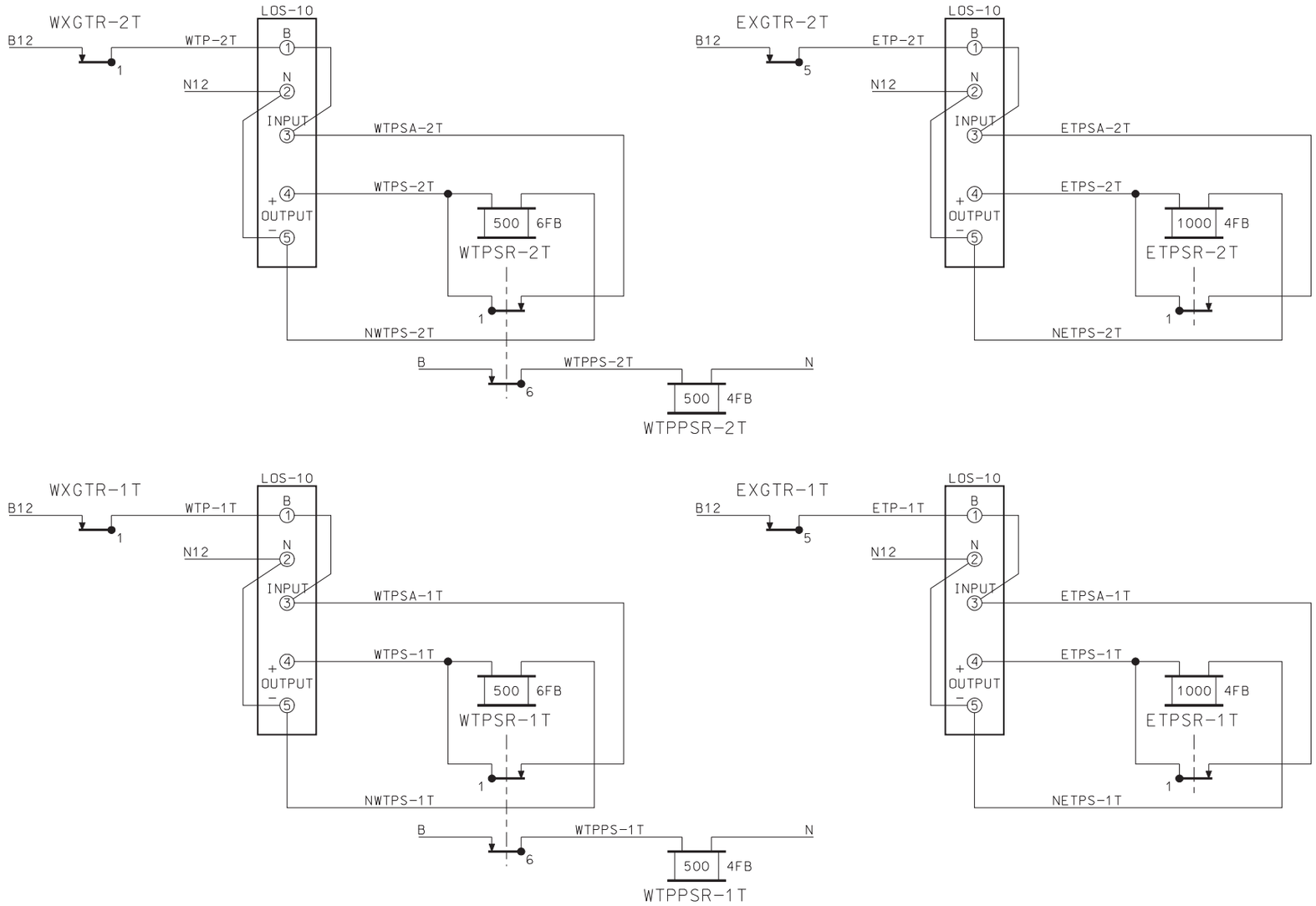

ALL WIRING ON THIS SHEET
#16 AWG UNLESS NOTED

~REVISIONS~

Metra SIGNAL ENGINEERING
CHICAGO, ILLINOIS

CHICAGO TO JOLIET
95TH ST., CHICAGO
LOS CIRCUITS

REFERENCE: 11.76 SH.1 THRU SH.13			DATE: 09/05/02
DESIGNED	DRAWN	CHECKED	APPROVED
SSC	SSC	TJS	WK
DISTRICT	PRINT NUMBER		
RI/S	11.76 SH.7		

$$$$junu$$$

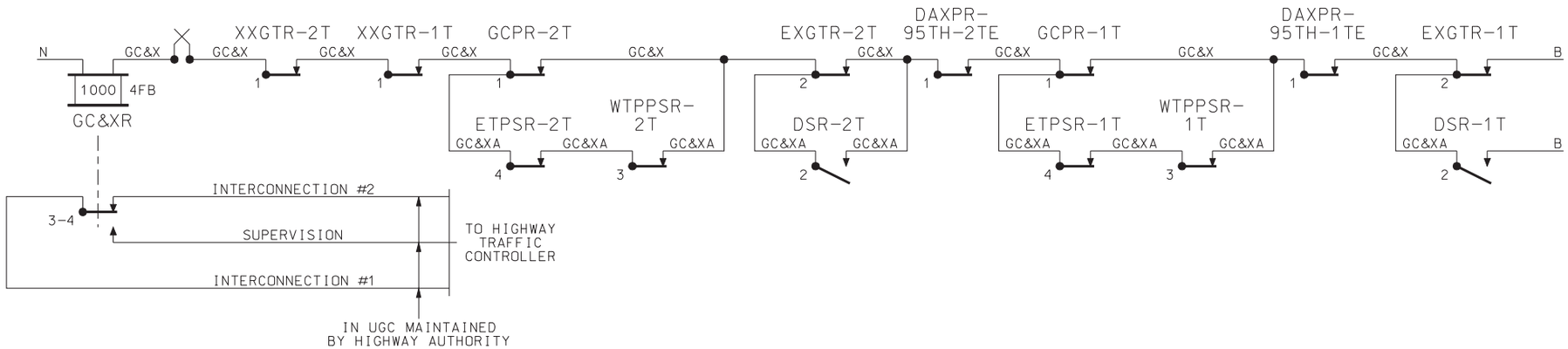

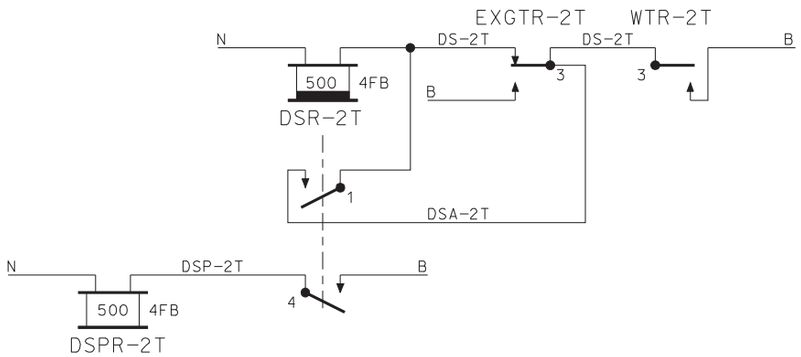

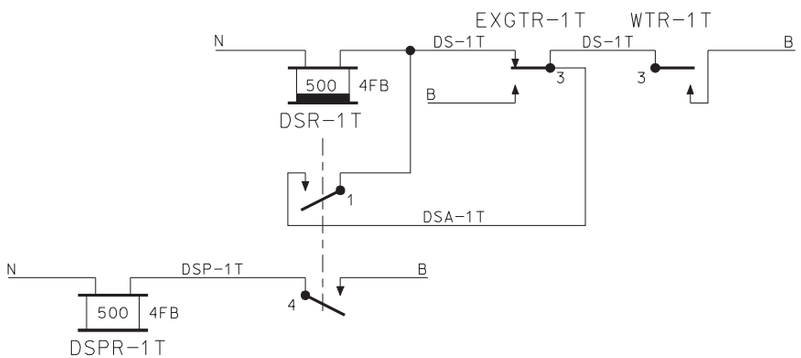

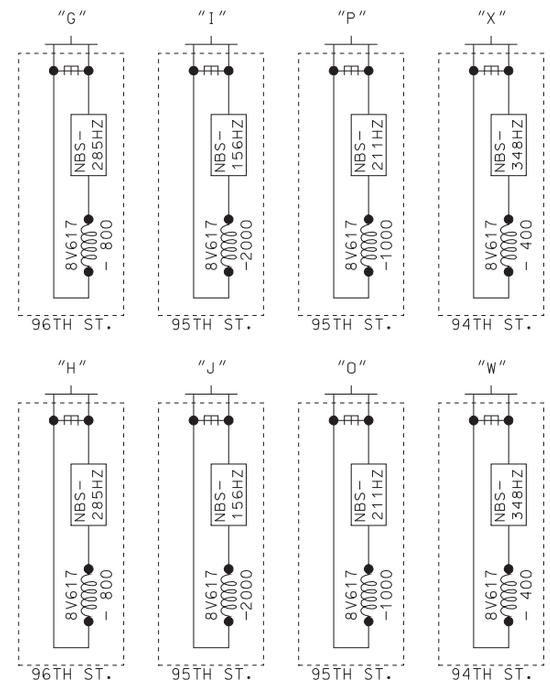

NOTES:

ALL WIRING ON THIS SHEET #16 AWG UNLESS NOTED

~REVISIONS~

11/14/02 OK

Metra SIGNAL ENGINEERING CHICAGO, ILLINOIS

CHICAGO TO JOLIET
95TH ST., CHICAGO
GC&X AND DS CIRCUITS

REFERENCE:			DATE:
11.76 SH.1 THRU SH.13			09/05/02
DESIGNED	DRAWN	CHECKED	APPROVED
SSC	SSC		
DISTRICT	PRINT NUMBER		
RI/S	11.76 SH.8		

$$$$filename$$$$

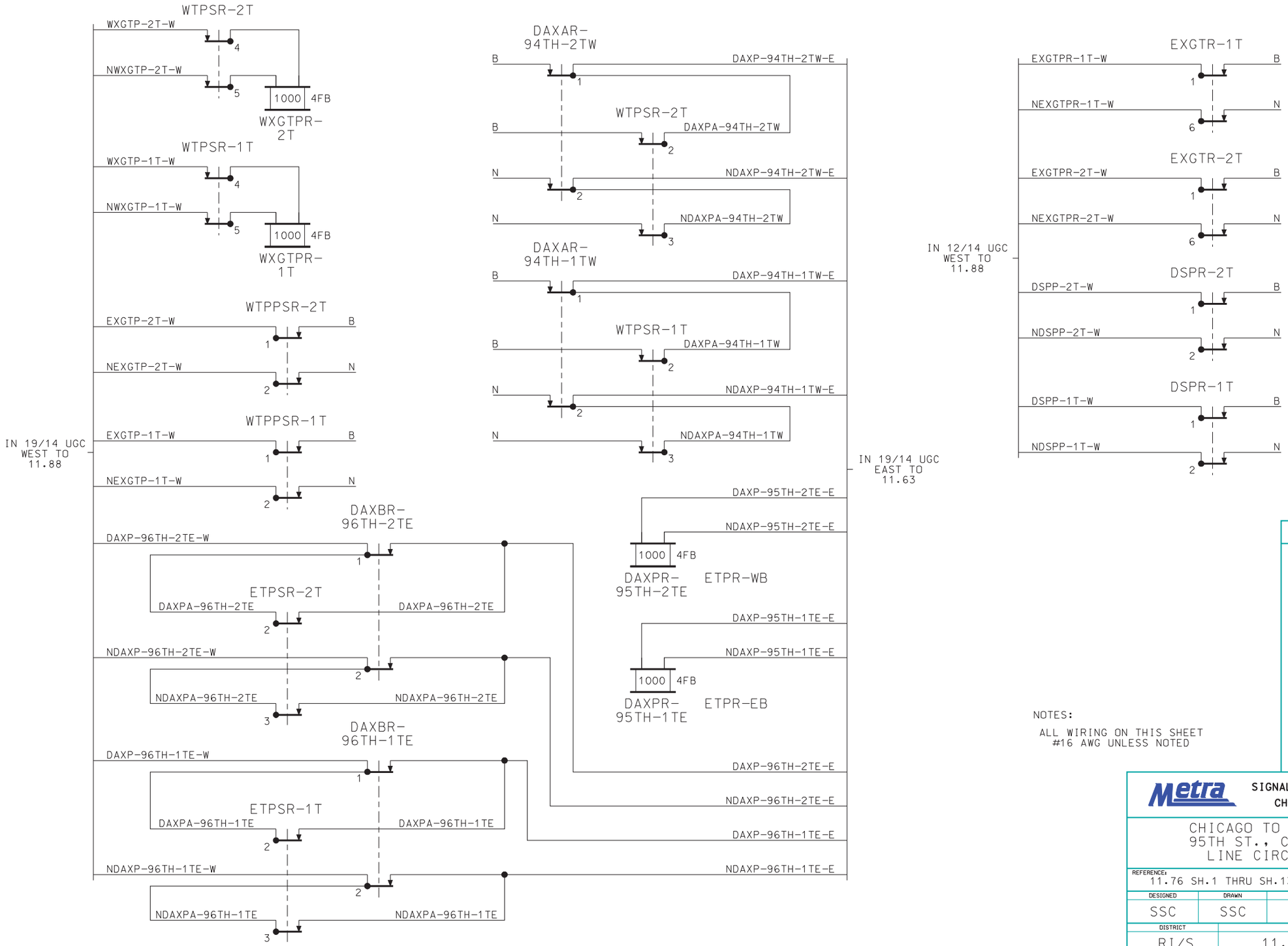

NOTES:

ALL WIRING ON THIS SHEET #16 AWG UNLESS NOTED

~REVISIONS~

Metra SIGNAL ENGINEERING CHICAGO, ILLINOIS

CHICAGO TO JOLIET
95TH ST., CHICAGO
LINE CIRCUITS

REFERENCE:			DATE:
11.76 SH.1 THRU SH.13			09/05/02
DESIGNED	DRAWN	CHECKED	APPROVED
SSC	SSC	[illegible]	[illegible]
DISTRICT	PRINT NUMBER		
RI/S	11.76 SH.9		

$$$sytime$$$

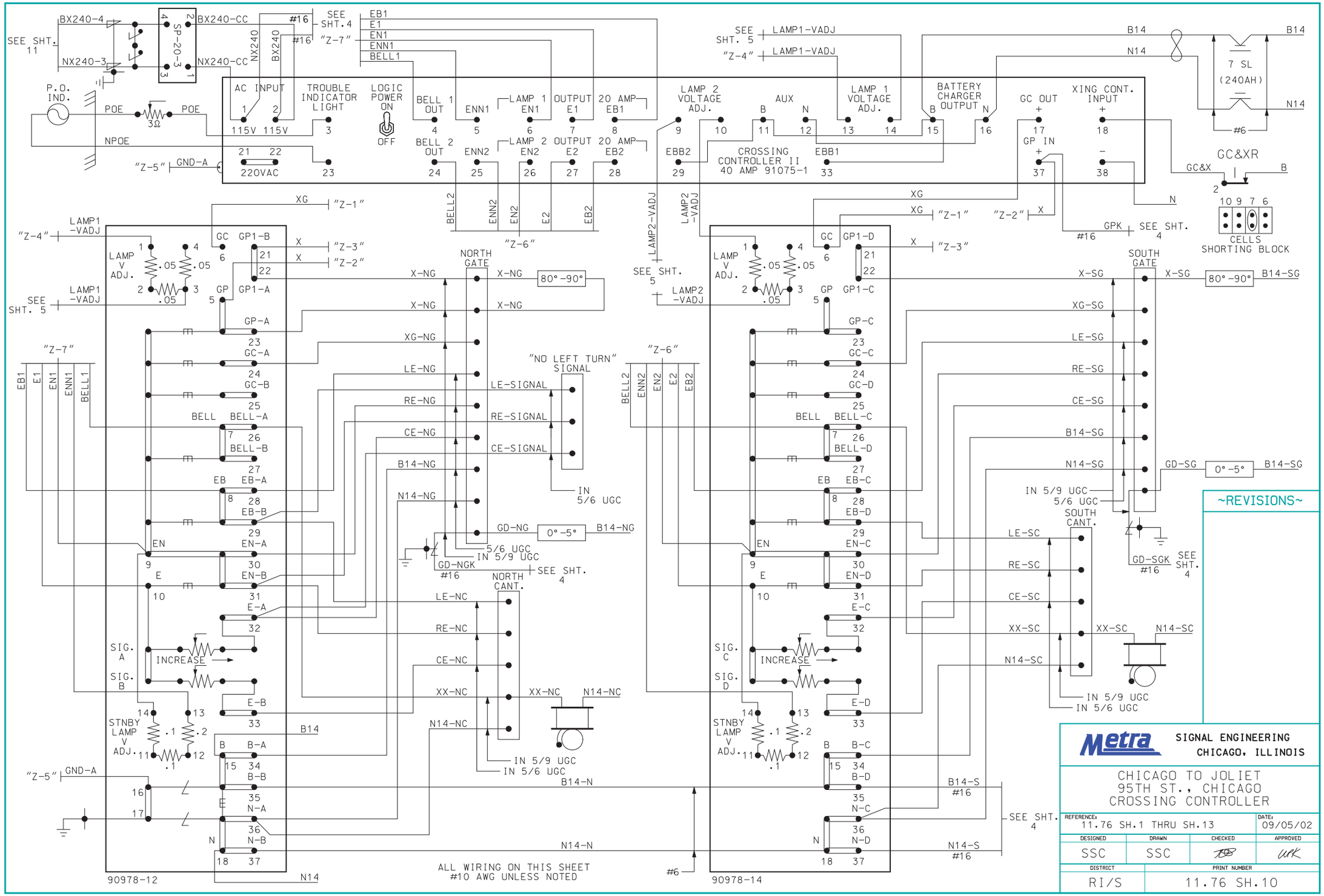

SEE SHT. 11
BX240-4
NX240-3
SP-20-3
BX240-CC
NX240-CC
NX240
BX240
#16
SEE SHT. 4
"Z-7"
EB1
E1
EN1
ENN1
BELL1
P.O. IND.
POE
3Ω
NPOE
"Z-5"
GND-A
AC INPUT
115V 115V
220VAC
TROUBLE INDICATOR LIGHT
LOGIC POWER ON
OFF
BELL 1 OUT
BELL 2 OUT
ENN1
ENN2
LAMP 1 EN1
LAMP 2 EN2
OUTPUT E1
OUTPUT E2
20 AMP EB1
20 AMP EB2
LAMP 2 VOLTAGE ADJ.
AUX
LAMP 1 VOLTAGE ADJ.
BATTERY CHARGER OUTPUT
GC OUT
GP IN
XING CONT. INPUT
CROSSING CONTROLLER II 40 AMP 91075-1
EBB2
EBB1
SEE SHT. 5
LAMP1-VADJ
"Z-4"
B14
N14
7 SL (240AH)
#6
GC&XR
GC&X
CELLS SHORTING BLOCK
GPK
SEE SHT. 4
XG
"Z-1"
"Z-2"
"Z-3"
"Z-6"
LAMP2-VADJ
LAMP1 -VADJ
LAMP V ADJ.
GC
GP1-B
GP1-A
GP
GP-A
GC-A
GC-B
BELL
BELL-A
BELL-B
EB
EB-A
EB-B
EN
EN-A
EN-B
E
E-A
E-B
SIG. A
SIG. B
INCREASE
STNBY LAMP V ADJ.
B
B-A
B-B
N-A
N-B
N
90978-12
NORTH GATE
X-NG
XG-NG
LE-NG
RE-NG
CE-NG
B14-NG
N14-NG
80°-90°
"NO LEFT TURN" SIGNAL
LE-SIGNAL
RE-SIGNAL
CE-SIGNAL
IN 5/6 UGC
GD-NG
0°-5°
5/6 UGC
IN 5/9 UGC
GD-NGK
NORTH CANT.
LE-NC
RE-NC
CE-NC
XX-NC
N14-NC
B14-N
N14-N
N14
ALL WIRING ON THIS SHEET #10 AWG UNLESS NOTED
GP1-D
GP1-C
GP-C
GC-C
GC-D
BELL-C
BELL-D
EB-C
EB-D
EN-C
EN-D
E-C
E-D
SIG. C
SIG. D
B-C
B-D
N-C
N-D
90978-14
SOUTH GATE
X-SG
XG-SG
LE-SG
RE-SG
CE-SG
B14-SG
N14-SG
GD-SG
SOUTH CANT.
LE-SC
RE-SC
CE-SC
XX-SC
N14-SC
GD-SGK
B14-S
N14-S
~REVISIONS~
Metra
SIGNAL ENGINEERING
CHICAGO, ILLINOIS
CHICAGO TO JOLIET
95TH ST., CHICAGO
CROSSING CONTROLLER
REFERENCE: 11.76 SH.1 THRU SH.13
DATE: 09/05/02
DESIGNED SSC
DRAWN SSC
CHECKED
APPROVED
DISTRICT RI/S
PRINT NUMBER 11.76 SH.10

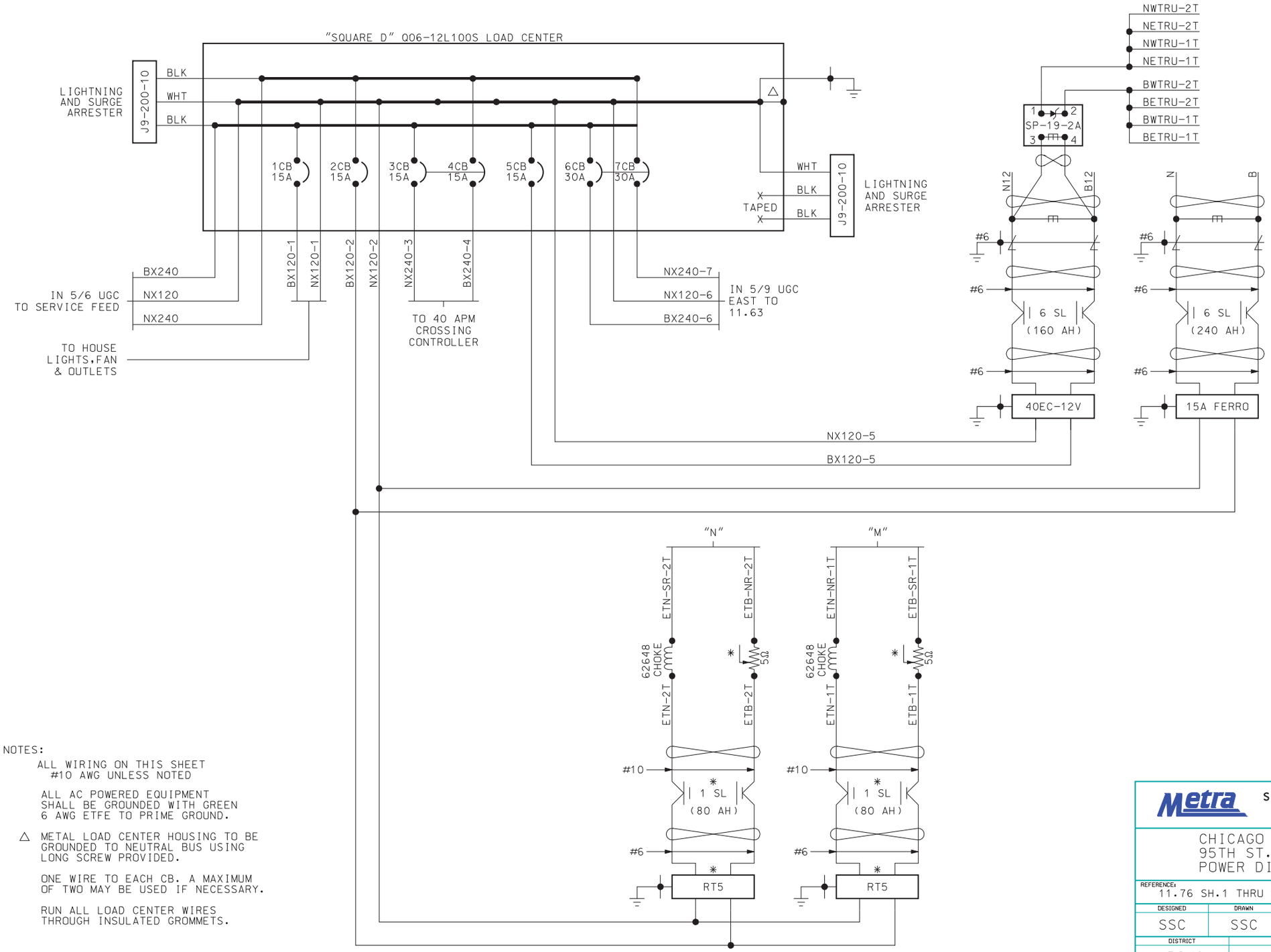

NOTES:

ALL WIRING ON THIS SHEET #10 AWG UNLESS NOTED

ALL AC POWERED EQUIPMENT SHALL BE GROUNDED WITH GREEN 6 AWG ETFE TO PRIME GROUND.

△ METAL LOAD CENTER HOUSING TO BE GROUNDED TO NEUTRAL BUS USING LONG SCREW PROVIDED.

ONE WIRE TO EACH CB. A MAXIMUM OF TWO MAY BE USED IF NECESSARY.

RUN ALL LOAD CENTER WIRES THROUGH INSULATED GROMMETS.

~REVISIONS~

Metra SIGNAL ENGINEERING CHICAGO, ILLINOIS

CHICAGO TO JOLIET
95TH ST., CHICAGO
POWER DISTRIBUTION

REFERENCE:			DATE:
11.76 SH.1 THRU SH.13			09/05/02
DESIGNED	DRAWN	CHECKED	APPROVED
SSC	SSC	[illegible]	[illegible]
DISTRICT	PRINT NUMBER		
RI/S	11.76 SH.11		

$$$sytime$$$

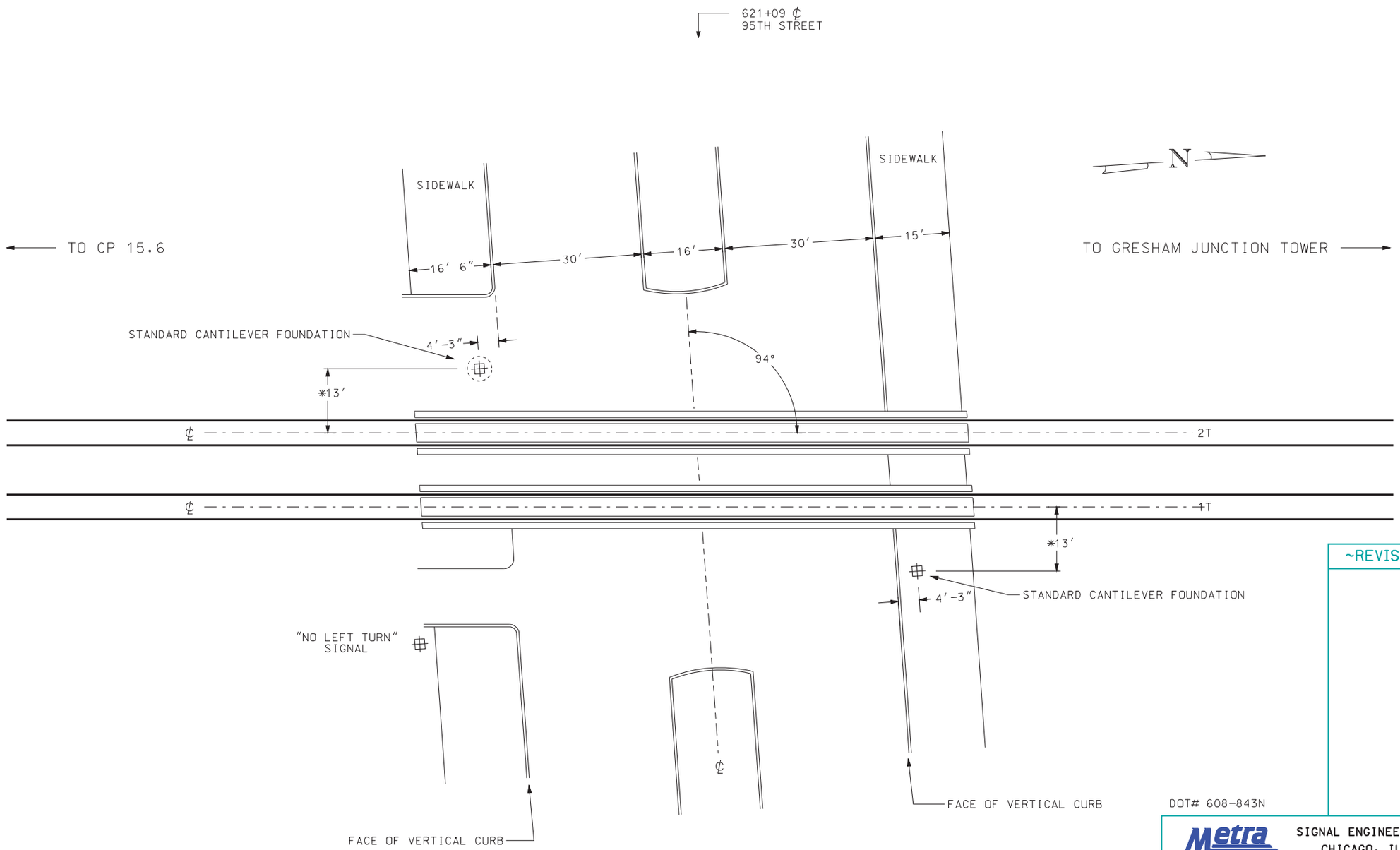

DOT# 608-843N

~REVISIONS~

NOTE:

RING GUARDRAIL WITH 5' RADIUS

*13' IS CLEARANCE DUE TO GATE ARM OFFSET

ENLARGED VIEW OF CROSSING
SHOWING LOCATION OF SIGNAL FOUNDATIONS
~ NOT TO SCALE ~

RELAY HOUSE TO BE LOCATED A MINIMUM OF 30 FEET FROM THE EDGE OF THE NEAREST TRAFFIC LANE AND AN ADEQUATE DISTANCE FROM TRACK IN ORDER TO REDUCE OBSTRUCTION TO MOTORIST'S SIGHT DISTANCE.

Metra SIGNAL ENGINEERING
CHICAGO, ILLINOIS

CHICAGO TO JOLIET
95TH ST., CHICAGO
ENLARGED VIEW

REFERENCE:			DATE:
11.76 SH.1 THRU SH.13			09/05/02
DESIGNED	DRAWN	CHECKED	APPROVED
SSC	SSC	[illegible]	[illegible]
DISTRICT	PRINT NUMBER		
RI/S	11.76 SH.12		

$$$sytime$$$

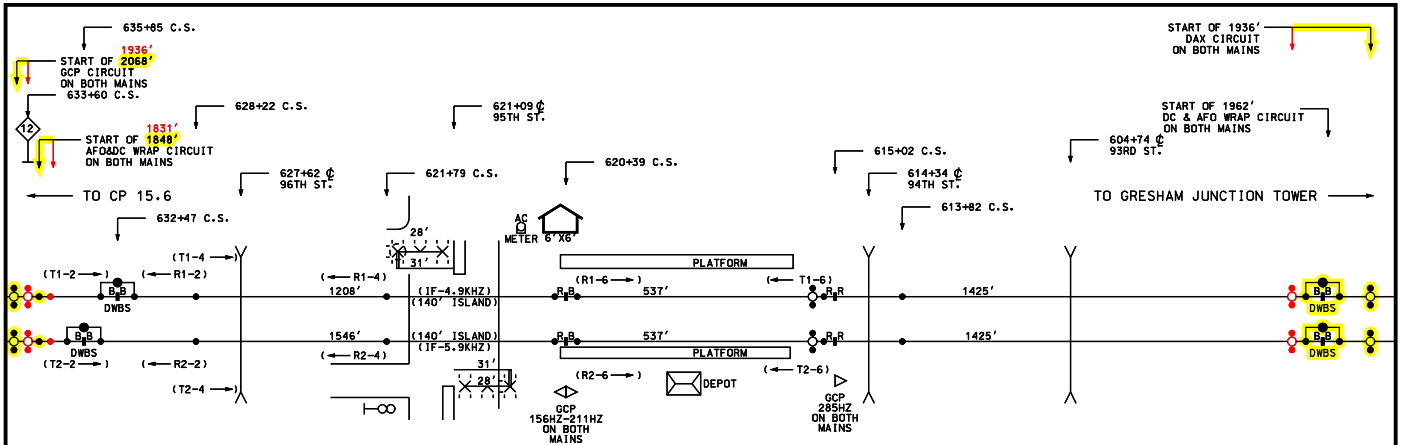

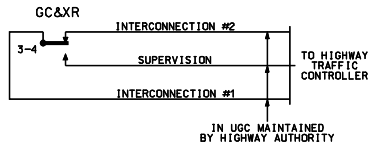

NOTES:

- INDICATES WIDEBAND SHUNT COUPLER
- NARROW BAND SHUNT
- BIDIRECTIONAL APPLICATION IN SINGLE DIRECTION
- BIDIRECTIONAL APPLICATION
- GCP *** HZ — GRADE CROSSING PREDICTOR OPERATION FREQUENCY
- (T) — AFTAC TRANSMITTER
- (R) — AFTAC RECEIVER
- (AFO) — AUDIO FREQUENCY OVERLAY

EW & WW APPROACH - 1T & 2T AT 30 MPH			
MIN. WARNING TIME	=	37 SEC *	34 SEC
REACTION TIME	=	5 SEC	
RESPONSE TIME	=	5 SEC	
APPROACH LENGTH	=	2068 FT.	1936 FT.
* IDOT SIMULTANEOUS PREEMPT	=	37 SEC	34 SEC

~REVISIONS~

SSC 09/05/02 OK WK
JK 04/08/14 OK SP

YELLOW - IN
RED - OUT

CREW
04/08/14

DOT# 608-843N

Metra SIGNAL ENGINEERING
CHICAGO, ILLINOIS

CHICAGO TO JOLIET
95TH ST., CHICAGO
EXHIBIT

REFERENCE:			DATE:
11.76 SH.1 THRU SH.13			10/06/00
DESIGNED	DRAWN	CHECKED	APPROVED
SSC	SSC	SSC	WK
DISTRICT		PRINT NUMBER	
RI/S		11.76 SH.13	

15-APR-2014 11:53