fre-029.55-0.dgn
23-APR-2014

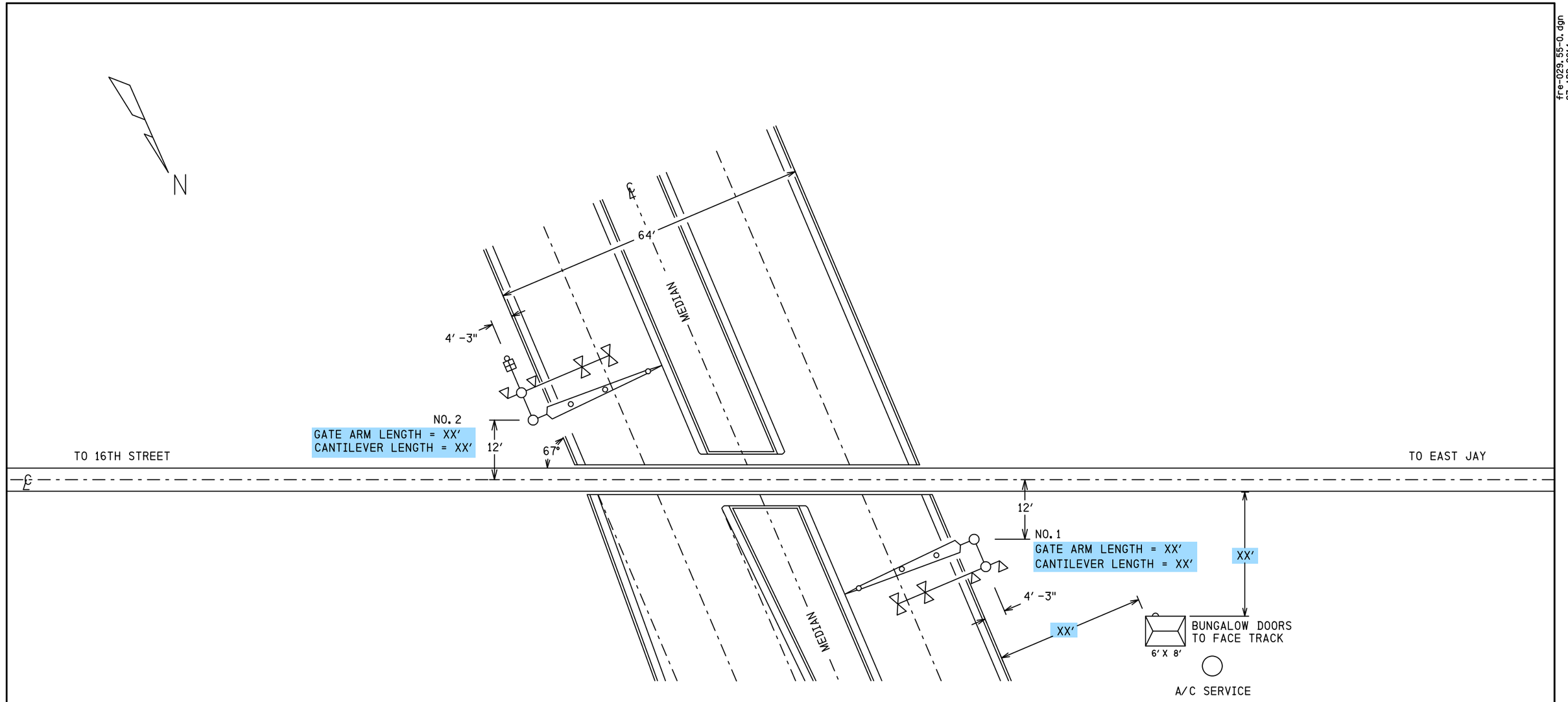

NOTES -

1- DESIGN SPEED 40 M.P.H. DESIGN SPEED 50 M.P.H.

2- CLEARANCE DISTANCE 35 FEET MAXIMUM.

3- CONSTANT WARNING CONTROL.

4- APPROACH CIRCUIT DISTANCE PROVIDES FOR:

TRAFFIC SIGNAL PRE-EMPTION	50 SEC. (00 SEC. ADVANCE)	00
MINIMUM WARNING TIME	50 SEC.	20
GATE DESCENT DELAY TIME	04 SEC.	
BUFFER TIME	10 SEC.	
EQUIPMENT REACTION TIME	05 SEC.	

FIELD TO CONFIRM
GATE & CANT LENGTH
& BUNGALOW DISTANCES

TO BE CONFIRMED

CONFIRMED
DATE _____
BY _____
(PRINT NAME)

SII 03 MAR 2014

PROPOSED
DESIGN NO. 12-0126
RED-IN YELLOW-OUT

AS INSTALLED
DATE _____
BY _____
(PRINT NAME)

PROPOSED D	PROPOSED M	PROPOSED Y	REVISIONS	D	C	COMPLETED D	COMPLETED M	COMPLETED Y	C
			PLAN REDRAWN			03	03	14	NAD
03	03	14	M.029.55 UPGRADE	NAD	MRB				

REGION SOUTHERN
SUB. FREEPORT 382

SIGNALS AND COMMUNICATIONS HOMEWOOD
13 FEBRUARY 1989
DES. CN
CH. CN

SITUATION SKETCH
SCALE 1" = 20′
CAROL STREAM, IL
GARY AVE

FRE-029.55-0

DOT# 289 890N

10

SIEMENS INDUSTRY INC
LOUISVILLE DIVISION, LOUISVILLE, KY

REVISIONS				
NO.	DATE	BY	DESCRIPTION	APP. BY
1				
2				
3				
4				
5				

FLASHING LIGHT UNITS ALIGNMENT TABLE

PRIMARY FRONT LIGHTS FOR VEHICLES							
SIG #	LIGHT #	ROUNDEL		ROAD SPEED	MINIMUM DISTANCE	RECOMMENDED DISTANCE	ALIGNMENT DISTANCE
		SIZE	TYPE	MPH	FT	FT	FT
1	A, B	12"					
1	E, F	12"					
2	C, D	12"					
2	G, H	12"					
BACK LIGHTS FOR VEHICLES							
SIG #	LIGHT #	ROUNDEL		ROAD SPEED	MINIMUM DISTANCE	RECOMMENDED DISTANCE	ALIGNMENT DISTANCE
		SIZE	TYPE	MPH	FT	FT	FT
1	A1, B1	12"		N/A	N/A	N/A	50
2	C1, D1	12"		N/A	N/A	N/A	50

NOTE
FIELD IS TO PROVIDE THE ACTUAL ALIGNMENT DISTANCE AS DETERMINED BY
SCP-706: ROAD CROSSING DEVICE LIGHT UNIT ALIGNMENT PROCEDURES

FIELD TO VERIFY

CONTENT	SHEET NO.
SITUATION SKETCH	0
TRACK LAYOUT & GCP3000 CIRCUITS & INDEX	01
LINE CIRCUITS	02
GCP3000 PROGRAM INFORMATION	03
ELECTROCODE 4 PLUS CIRCUITS	04
DATA RECORDER CIRCUITS	05
POWER DISTRIBUTION	06
SSCCIII 40A CROSSING CONTROLLER	07
CANTILEVER/GATE MECHANISM #1	08
CANTILEVER/GATE MECHANISM #2	09

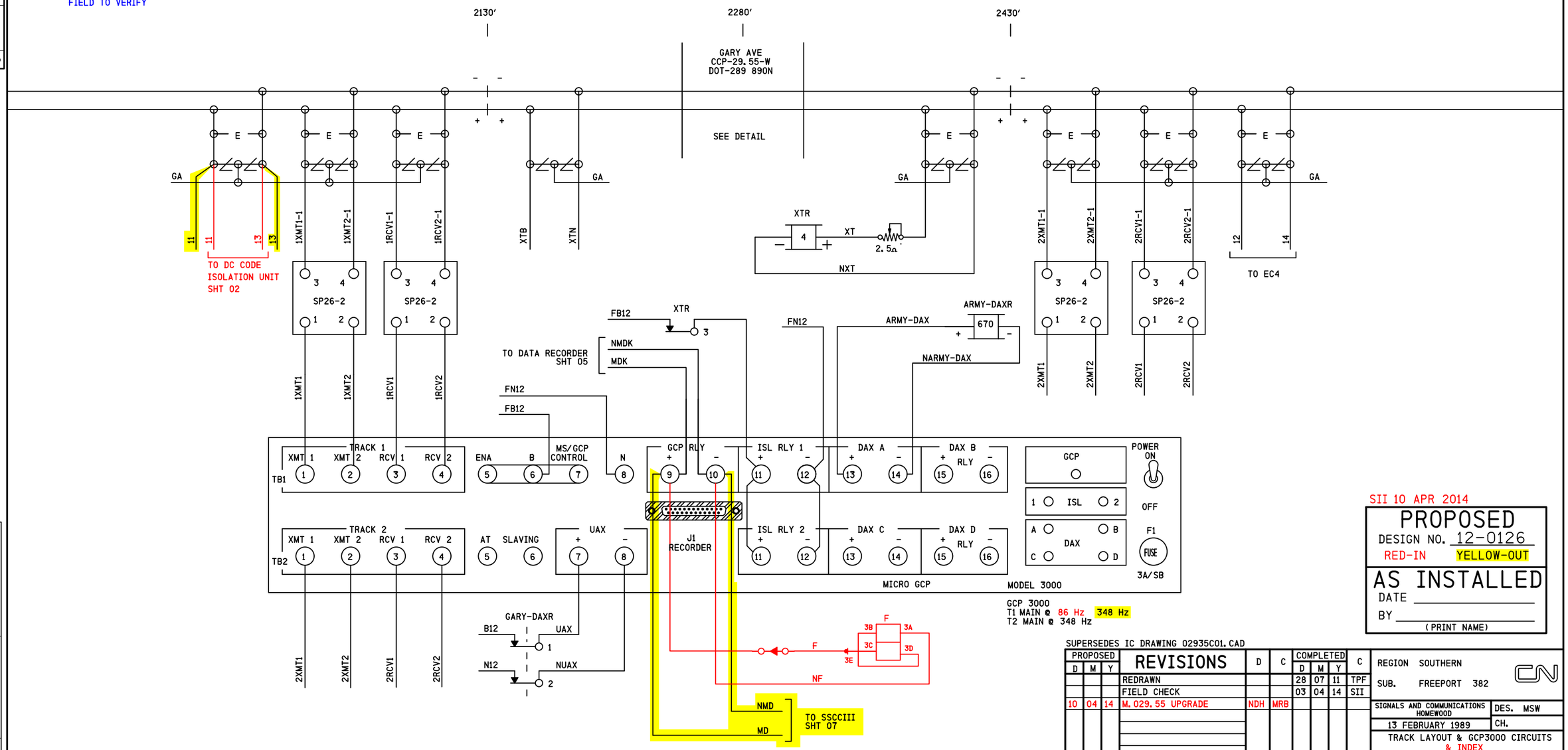

SII 10 APR 2014

PROPOSED
DESIGN NO. 12-0126
RED-IN YELLOW-OUT

AS INSTALLED
DATE _____
BY _____
(PRINT NAME)

SUPERSEDES IC DRAWING 02935C01.CAD

PROPOSED			REVISIONS	D	C	COMPLETED			C
D	M	Y				D	M	Y	
			REDRAWN			28	07	11	TPF
			FIELD CHECK			03	04	14	SII
10	04	14	M.029.55 UPGRADE	NDH	MRB				

REGION SOUTHERN
SUB. FREEPORT 382
SIGNALS AND COMMUNICATIONS HOMEWOOD
DES. MSW
13 FEBRUARY 1989
CH.
TRACK LAYOUT & GCP3000 CIRCUITS & INDEX
CAROL STREAM, IL
GARY AVE
FRE-029.55-01
DOT# 289 890N
9

SIEMENS INDUSTRY INC
DES. : NDH
CKD. : MRB
DRN. : NDH
P TIME:15:08
DATE: 03/03/14
ISSUE DATE: N/A
PLAN NO. :N/A
P DATE: 23-APR-2014
JOB NO. : P1CA10512
EST. NO. :XP-7255
SHEET 1 OF 9
CAD ID. :FRE-029.55-01

SIEMENS INDUSTRY INC
LOUISVILLE DIVISION, LOUISVILLE, KY

fre-029.55-01.dgn
23-APR-2014

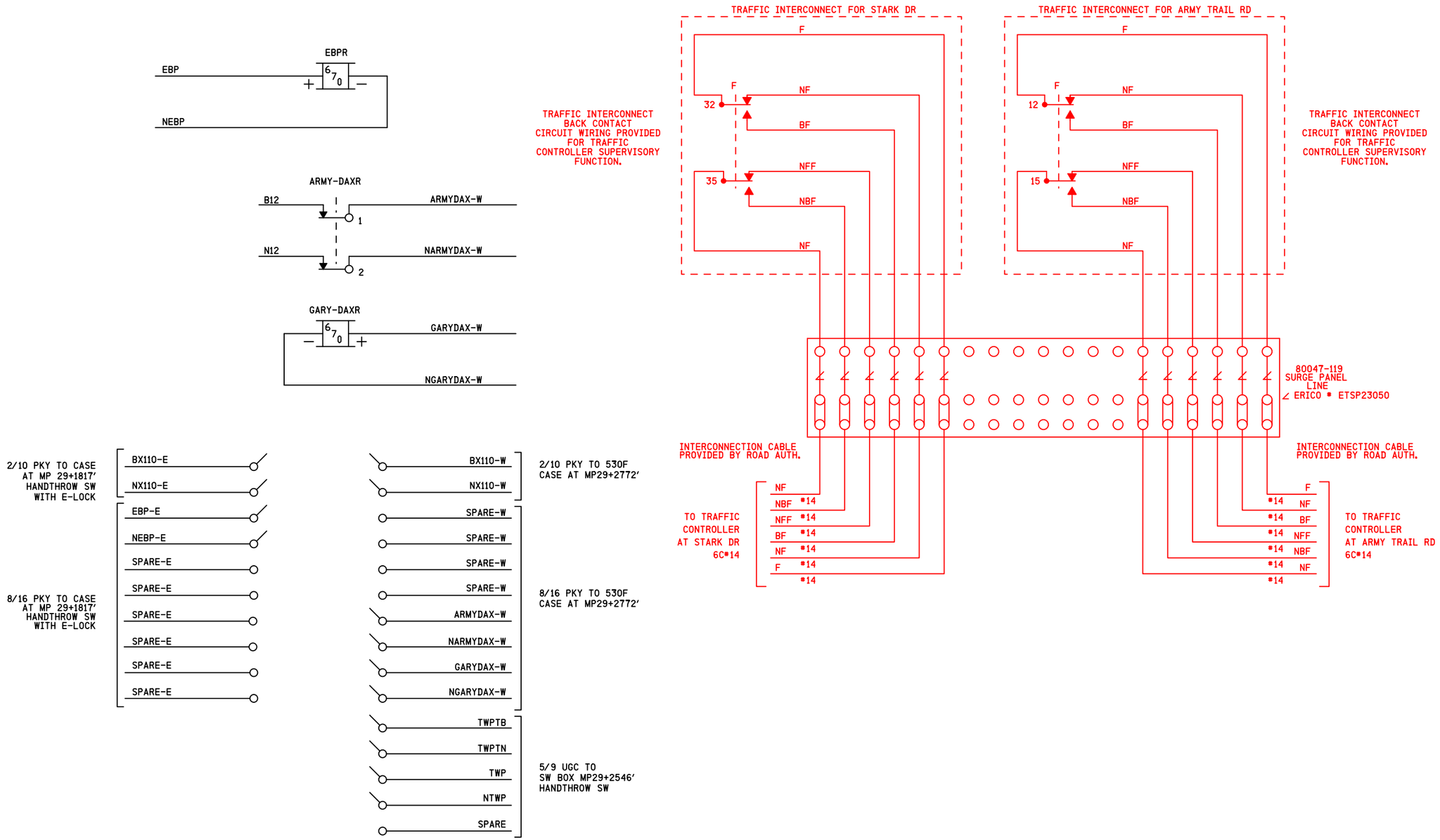

fre-029.55-02.dgn
23-APR-2014

REVISIONS				
NO.	DATE	BY	DESCRIPTION	APP. BY
1				
2				
3				
4				
5				

SIEMENS INDUSTRY INC

DES.: NDH	DATE: 03/03/14	JOB NO.: PICA10512	
CKD.: MRB	ISSUE DATE: N/A	EST. NO.: XP-7255	
DRN.: NDH	PLAN NO.: N/A	SHEET 2 OF 9	
P TIME: 15:08	P DATE: 23-APR-2014	CAD ID.: FRE-029.55-02	

SII 10 APR 2014

PROPOSED
DESIGN NO. 12-0126
RED-IN YELLOW-OUT

AS INSTALLED
DATE _____
BY _____
(PRINT NAME)

SUPERSEDES IC DRAWING 02935C02.CAD

PROPOSED D	PROPOSED M	PROPOSED Y	REVISIONS	D	C	COMPLETED D	COMPLETED M	COMPLETED Y	C
			REDRAWN			28	07	11	TPF
			FIELD CHECK			03	04	14	SII
10	04	14	M.029.55 UPGRADE	NDH	MRB				

REGION SOUTHERN
SUB. FREEPORT 382
SIGNALS AND COMMUNICATIONS HOMEWOOD
DES. MSW
13 FEBRUARY 1989
CH.
LINE CIRCUITS
CAROL STREAM, IL
GARY AVE
FRE-029.55-02
DOT# 289 890N

SIEMENS INDUSTRY INC
LOUISVILLE DIVISION, LOUISVILLE, KY

REVISIONS				
NO.	DATE	BY	DESCRIPTION	APP. BY
1				
2				
3				
4				
5				

3000 GCP APPLICATION HISTORY CARD

Equipment: 3000 ■ 3000D2 ☐ 3000D2L ☐ 3000ND ☐ 3000ND2 ☐ Unit/Serial No: _____ Crossing No: CCP-29.43-W

Crossing Name: GARY AVE City: CAROL STREAM State: IL

Date Installed: _____ Weather: _____

Island Frequency: T1: _____ kHz T2: _____ kHz

PROGRAMMING HISTORY

		Initial Programmed Value Date: _____	Program Change Date: _____	Program Change Date: _____
■ press PROGRAM key				
NUMBER OF TRACKS (Number of transceiver modules, 1 or 2)		1 ☐ 2 ■	1 ☐ 2 ☐	1 ☐ 2 ☐
FREQUENCY (MS/GCP)	T1:	86 348 Hz	Hz	Hz
	T2:	348 Hz	Hz	Hz
UNIDIRECTIONAL/BIDIRECTIONAL	T1:	UNI ■ BI ☐	UNI ☐ BI ☐	UNI ☐ BI ☐
	T2:	UNI ■ BI ☐	UNI ☐ BI ☐	UNI ☐ BI ☐
XMIT LEVEL	T1:	MAX ■ MED ☐	MAX ☐ MED ☐	MAX ☐ MED ☐
	T2:	MAX ■ MED ☐	MAX ☐ MED ☐	MAX ☐ MED ☐
PREDICTOR/MOTION SENSOR	T1:	PRED ■ MS ☐	PRED ☐ MS ☐	PRED ☐ MS ☐
	T2:	PRED ■ MS ☐	PRED ☐ MS ☐	PRED ☐ MS ☐
WARNING TIME SELECTED	T1:	60 30 sec.	sec.	sec.
	T2:	60 30 sec.	sec.	sec.
APPROACH DISTANCE SELECTED	T1:	3830 2200 ft.	ft.	ft.
	T2:	1191 ft.	ft.	ft.
APPROACH DISTANCE COMPUTED	T1:	2417 ft.	ft.	ft.
	T2:	1469 ft.	ft.	ft.
UAX1 PICKUP DELAY (UAX1) (0 = OFF)		22 25 sec.	sec.	sec.
ENA/UAX2 DELAY (0 = ENA)		0 sec.	sec.	sec.
ISLAND DISTANCE (between island track wire connections)	T1:	0 ft.	ft.	ft.
	T2:	0 ft.	ft.	ft.
NUMBER OF DAX'S		0 ☐ 1 ■ 2 ☐ 3 ☐ 4 ☐	0 ☐ 1 ☐ 2 ☐ 3 ☐ 4 ☐	0 ☐ 1 ☐ 2 ☐ 3 ☐ 4 ☐
DAX A TRACK ASSIGNMENT		T1 ■ T2 ☐	T1 ☐ T2 ☐	T1 ☐ T2 ☐
DAX A DISTANCE (0=PREEMPT)		ARMY TRAIL 1191 ft.	ft.	ft.
DAX A WARNING TIME		36 sec.	sec.	sec.
DAX B TRACK ASSIGNMENT		T1 ☐ T2 ☐	T1 ☐ T2 ☐	T1 ☐ T2 ☐
DAX B DISTANCE (0=PREEMPT)		ft.	ft.	ft.
DAX B WARNING TIME		sec.	sec.	sec.
DAX C TRACK ASSIGNMENT		T1 ☐ T2 ☐	T1 ☐ T2 ☐	T1 ☐ T2 ☐
DAX C DISTANCE (0=PREEMPT)		ft.	ft.	ft.
DAX C WARNING TIME		sec.	sec.	sec.
DAX D TRACK ASSIGNMENT		T1 ☐ T2 ☐	T1 ☐ T2 ☐	T1 ☐ T2 ☐
DAX D DISTANCE (0=PREEMPT)		ft.	ft.	ft.
DAX D WARNING TIME		sec.	sec.	sec.

PROGRAMMING HISTORY (continued)

		Initial Programmed Value Date: _____	Program Change Date: _____	Program Change Date: _____
SLAVING MASTER/SLAVE		MASTER ■ SLAVE ☐	MASTER ☐ SLAVE ☐	MASTER ☐ SLAVE ☐
PASSWORD ENABLED		DISABLED ☐ ENABLED ■	DISABLED ☐ ENABLED ☐	DISABLED ☐ ENABLED ☐
RECORDER INSTALLED		NOT INSTALLED ☐ INSTALLED ■	NOT INSTALLED ☐ INSTALLED ☐	NOT INSTALLED ☐ INSTALLED ☐
RS-232-C BAUD RATE		9600 bps	bps	bps
RS-232-C DATA BITS		7 ☐ 8 ■	7 ☐ 8 ☐	7 ☐ 8 ☐
RS-232-C STOP BITS		1 ■ 2 ☐	1 ☐ 2 ☐	1 ☐ 2 ☐
RS-232-C PARITY		NONE ■ MARK ☐ ODD ☐ SPACE ☐ EVEN ☐	NONE ☐ MARK ☐ ODD ☐ SPACE ☐ EVEN ☐	NONE ☐ MARK ☐ ODD ☐ SPACE ☐ EVEN ☐
(NOTE: SET DATE & TIME AS REQUIRED)				
DATE (e.g., MON 27 FEB 1995)				
TIME (e.g., 11:25:43 AM)				
DAYLIGHT SAVINGS		ON ■ OFF ☐		

EXPANDED PROGRAMMING HISTORY (Function Mode, Optional)

		Initial Programmed Value Date: _____	Program Change Date: _____	Program Change Date: _____
■ press FUNCTION key				
SWITCH TO MS (enter EZ value)	T1:	10 EZ	EZ	EZ
	T2:	10 EZ	EZ	EZ
TRANSFER DELAY MS TO GCP (0=OFF)	T1:	0 sec.	sec.	sec.
	T2:	0 sec.	sec.	sec.
PRIME PREDICTION OFFSET (0=OFF)	T1:	0 ft.	ft.	ft.
	T2:	0 ft.	ft.	ft.
PICKUP DELAY PRIME		30 sec.	sec.	sec.
PICKUP DELAY DAX A		8 15 sec.	sec.	sec.
PICKUP DELAY DAX B		N/A sec.	sec.	sec.
PICKUP DELAY DAX C		N/A sec.	sec.	sec.
PICKUP DELAY DAX D		N/A sec.	sec.	sec.
COMPENSATION VALUE	T1:	1300		
	T2:	1300		
ENHANCED DETECTION (ED)	T1:	ON ■ OFF ☐	ON ☐ OFF ☐	ON ☐ OFF ☐
	T2:	ON ■ OFF ☐	ON ☐ OFF ☐	ON ☐ OFF ☐
BACK TO BACK T1 & T2 (When ED is on)		NO ■ YES ☐	NO ☐ YES ☐	NO ☐ YES ☐
STATION STOP TIMER (When ED is on)	T1:	10 sec.	sec.	sec.
	T2:	10 sec.	sec.	sec.
NUMBER OF TRACK WIRES	T1:	4 ■ 6 ☐	4 ☐ 6 ☐	4 ☐ 6 ☐
	T2:	4 ■ 6 ☐	4 ☐ 6 ☐	4 ☐ 6 ☐
LOW EX ADJUSTMENT	T1:	0		
	T2:	0		

CALIBRATION HISTORY

	LINEARIZATION HISTORY					
	HARDWIRE SHUNT AT TERMINATION SHUNT		HARDWIRE SHUNT AT 50 PERCENT POINT OF TRACK			
CALIBRATION HISTORY EZ/EX VALUES (TRACK UNOCCUPIED)	EZ VALUE	EZ/2 VALUE	NO LINEARIZATION EZ VALUE	LINEARIZATION COMPLETE STEP ±	LINEARIZATION COMPLETE EZ	
EX						
EZ						
	TRACK 1	TRACK 1	TRACK 2	TRACK 2		
	EAST	WEST	EAST	WEST		

fre-029.55-03.dgn
23-APR-2014

SIII 10 APR 2014

PROPOSED
DESIGN NO. 12-0126
RED-IN YELLOW-OUT

AS INSTALLED
DATE _____
BY _____
(PRINT NAME)

SUPERSEDES IC DRAWING 02935C03.CAD

PROPOSED D	PROPOSED M	PROPOSED Y	REVISIONS	D	C	COMPLETED D	COMPLETED M	COMPLETED Y	C
			REDRAWN			28	07	11	TPF
			FIELD CHECK			03	04	14	SII
10	04	14	M.029.55 UPGRADE	NDH	MRB				

REGION SOUTHERN
SUB. FREEPORT 382
CN

SIGNALS AND COMMUNICATIONS HOMEWOOD
02 DECEMBER 2003
DES. AVS
CH.

GCP3000 PROGRAM INFORMATION
CAROL STREAM, IL
GARY AVE

FRE-029.55-03

DOT# 289 890N

SIEMENS INDUSTRY INC

DES.: NDH	DATE: 03/03/14	JOB NO.: PICA10512	
CKD.: MRB	ISSUE DATE: N/A	EST. NO.: XP-7255	
DRN.: NDH	PLAN NO.: N/A	SHEET 3 OF 9	
P TIME: 15:08	P DATE: 23-APR-2014	CAD ID.: FRE-029.55-03	

SIEMENS INDUSTRY INC
LOUISVILLE DIVISION, LOUISVILLE, KY

REVISIONS				
NO.	DATE	BY	DESCRIPTION	APP. BY
1				
2				
3				
4				
5				

fre-029.55-04.dgn
23-APR-2014

PROGRAM: RRM-Q

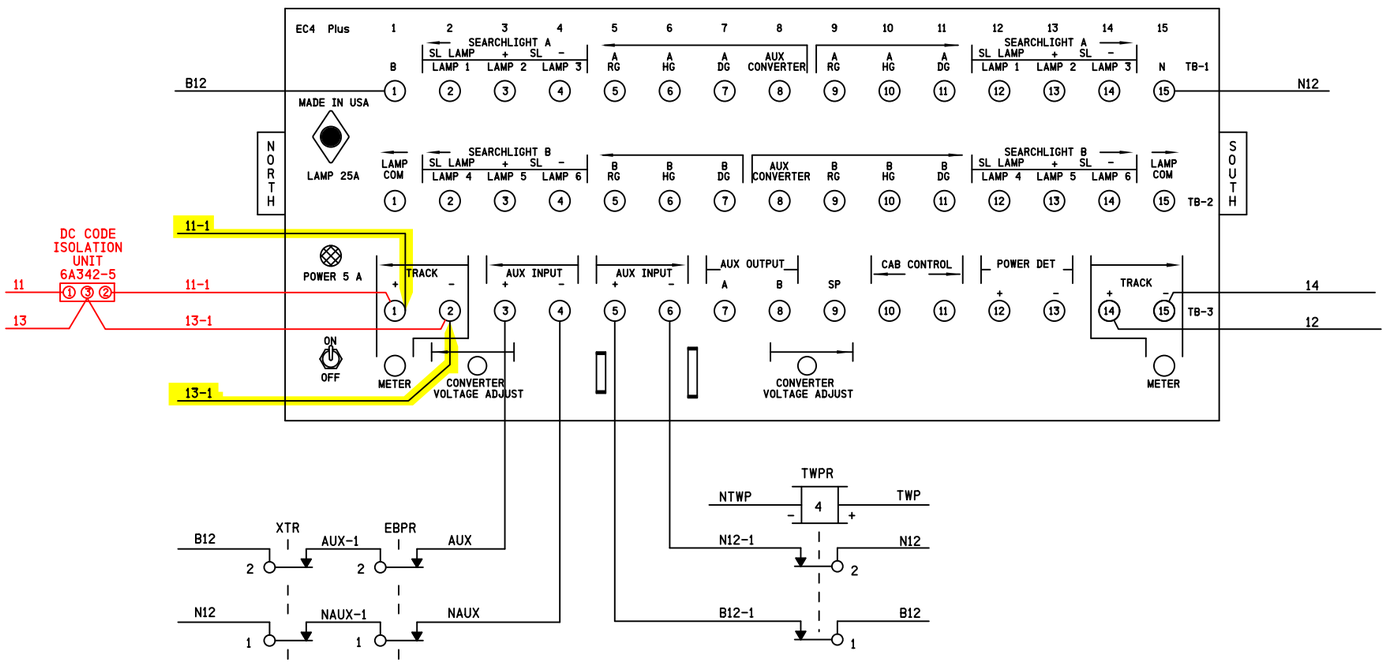

SII 10 APR 2014

PROPOSED
DESIGN NO. 12-0126
RED-IN YELLOW-OUT

AS INSTALLED
DATE _____
BY _____
(PRINT NAME)

SUPERSEDES IC DRAWING 0293504.CAD

PROPOSED D	PROPOSED M	PROPOSED Y	REVISIONS	D	C	COMPLETED D	COMPLETED M	COMPLETED Y	C
			REDRAWN			28	07	11	TPF
			FIELD CHECK			03	04	14	SII
10	04	14	M.029.55 UPGRADE	NDH	MRB				

REGION SOUTHERN
SUB. FREEPORT 382
CN

SIGNALS AND COMMUNICATIONS HOMEWOOD
30 JULY 2002
DES. MSW
CH.

ELECTROCODE 4 PLUS CIRCUITS

CAROL STREAM, IL
GARY AVE

FRE-029.55-04

DOT# 289 890N

SIEMENS INDUSTRY INC

DES.: NDH	DATE: 03/03/14	JOB NO.: PICA10512	
CKD.: MRB	ISSUE DATE: N/A	EST. NO.: XP-7255	
DRN.: NDH	PLAN NO.: N/A	SHEET 4 OF 9	
P TIME: 15:08	P DATE: 23-APR-2014	CAD ID.: FRE-029.55-04	

SIEMENS INDUSTRY INC
LOUISVILLE DIVISION, LOUISVILLE, KY

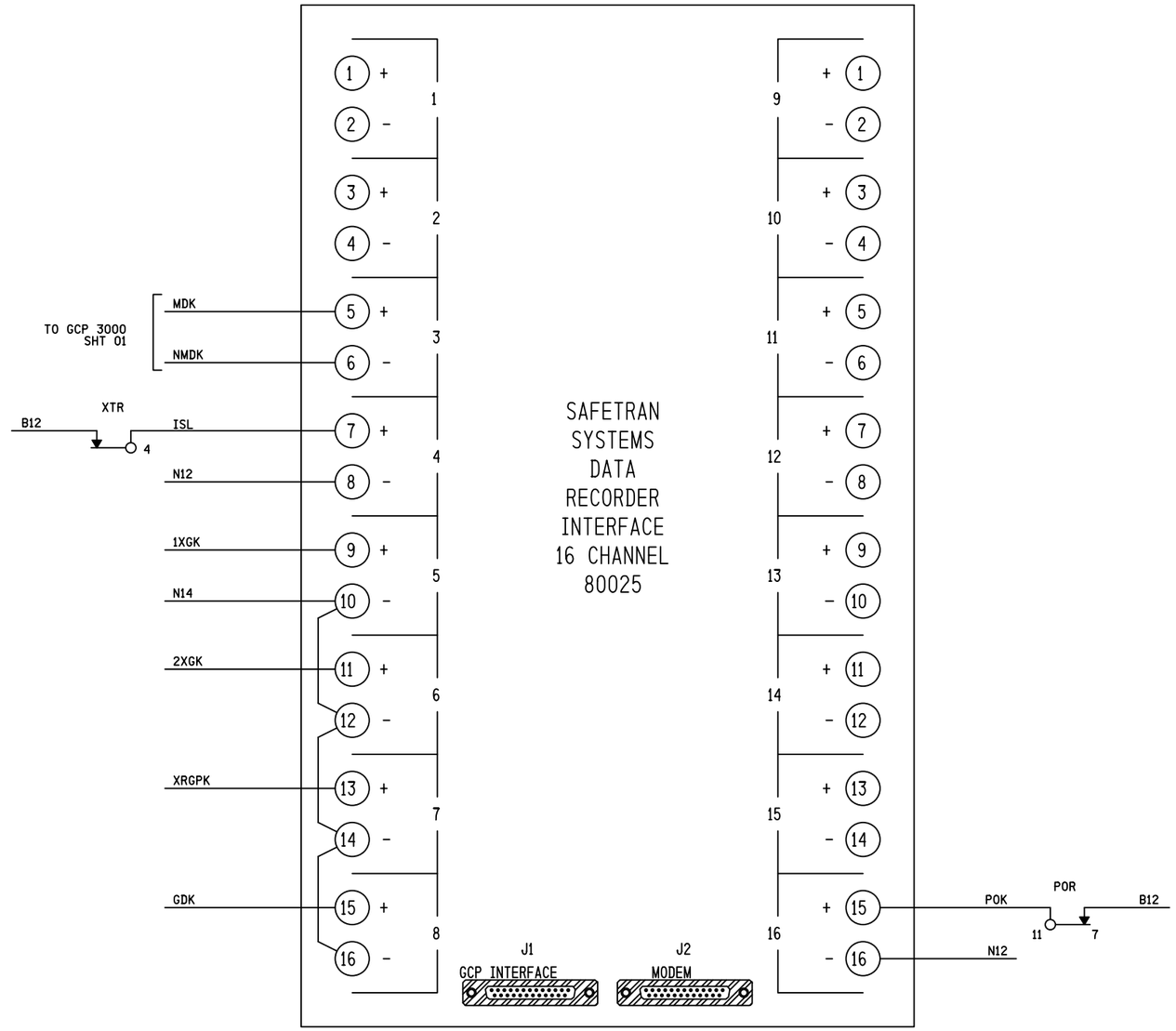

SUPERSEDES IC DRAWING 02935C05.CAD

PROPOSED D	PROPOSED M	PROPOSED Y	REVISIONS	D	C	COMPLETED D	COMPLETED M	COMPLETED Y	C
			REDRAWN			28	07	11	TPF
			FIELD CHECK			03	04	14	SII

REGION SOUTHERN

SUB. FREEPORT 382

SIGNALS AND COMMUNICATIONS HOMEWOOD

DES. MSW

30 JULY 2002

CH.

DATA RECORDER CIRCUITS

CAROL STREAM, IL

GARY AVE

FRE-029.55-05

DOT# 289 890N

REVISIONS

NO.	DATE	BY	DESCRIPTION	APP. BY
1				
2				
3				
4				
5				

SIEMENS INDUSTRY INC

DES.: NDH	DATE: 03/03/14	JOB NO.: PICA10512	
CKD.: MRB	ISSUE DATE: N/A	EST. NO.: XP-7255	
DRN.: NDH	PLAN NO.: N/A	SHEET 5 OF 9	
P TIME: 15:08	P DATE: 23-APR-2014	CAD ID.: FRE-029.55-05	

SIEMENS INDUSTRY INC
LOUISVILLE DIVISION, LOUISVILLE, KY

fre-029.55-05.dgn
23-APR-2014

REVISIONS				
NO.	DATE	BY	DESCRIPTION	APP. BY
1				
2				
3				
4				
5				

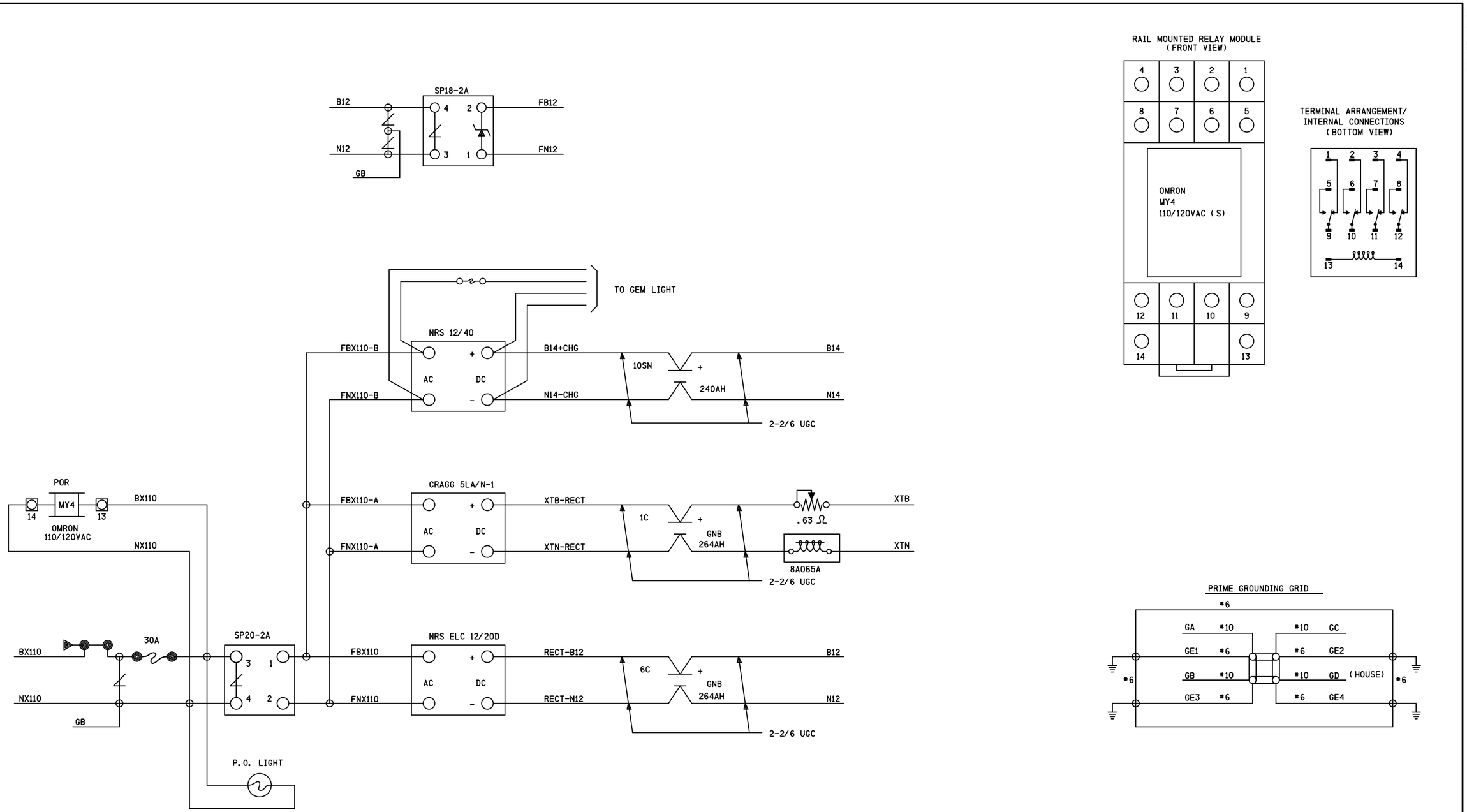

fre-029.55-06.dgn
23-APR-2014

SUPERSEDES IC DRAWING 02935C06.CAD

PROPOSED D	PROPOSED M	PROPOSED Y	REVISIONS	D	C	COMPLETED D	COMPLETED M	COMPLETED Y	C
			REDRAWN			28	07	11	TPF
			FIELD CHECK			03	04	14	SII

REGION SOUTHERN
SUB. FREEPORT 382

SIGNALS AND COMMUNICATIONS HOMEWOOD
13 FEBRUARY 1989
DES. MSW
CH.

POWER DISTRIBUTION
CAROL STREAM, IL
GARY AVE

FRE-029.55-06

DOT# 289 890N

SIEMENS INDUSTRY INC
DATE: 03/03/14 | JOB NO.: PICA10512
ISSUE DATE: N/A | EST. NO.: XP-7255
PLAN NO.: N/A | SHEET 6 OF 9
P DATE: 23-APR-2014 | CAD ID.: FRE-029.55-06
DES.: NDH
CKD.: MRB
DRN.: NDH
P TIME: 15:08

SIEMENS INDUSTRY INC
LOUISVILLE DIVISION, LOUISVILLE, KY

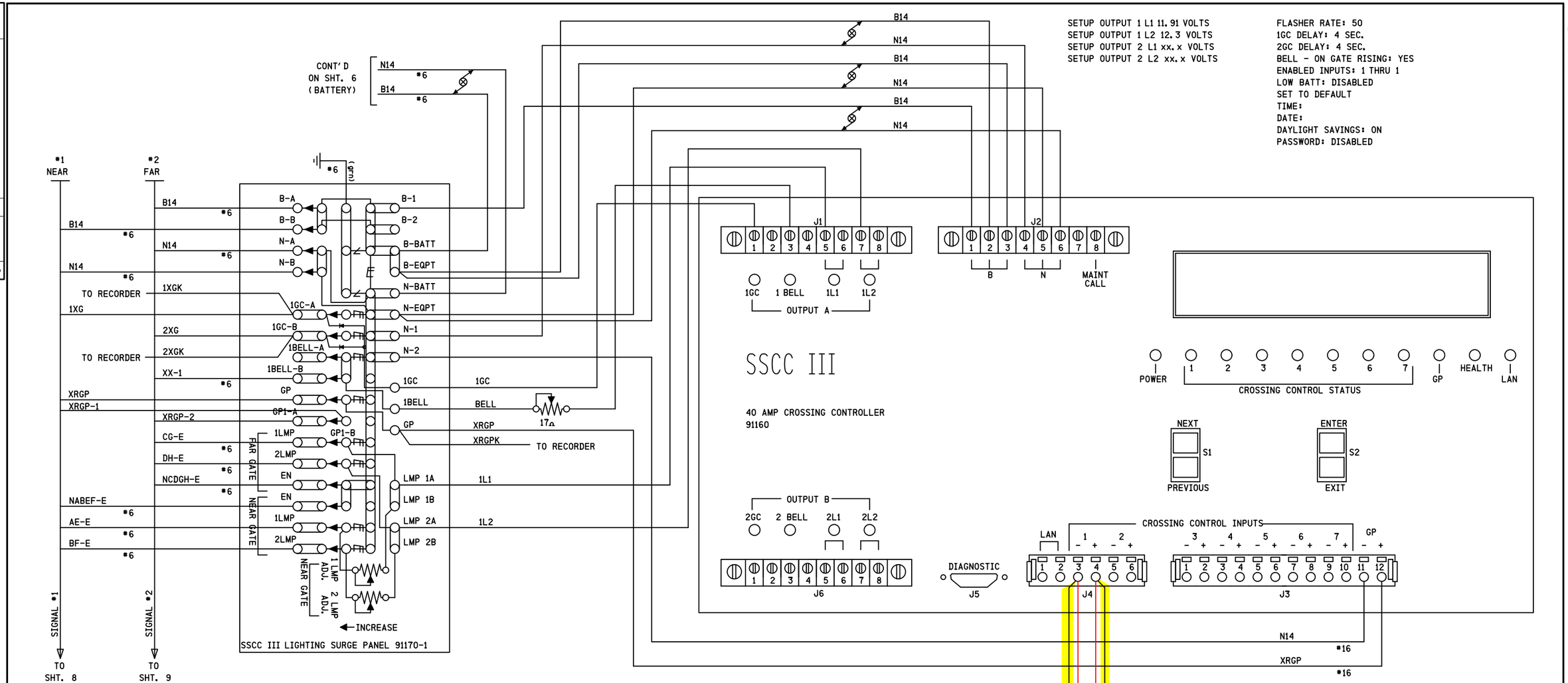

fre-029.55-07.dgn
23-APR-2014

REVISIONS				
NO.	DATE	BY	DESCRIPTION	APP. BY
1				
2				
3				
4				
5				

NOTES:

1. ALL WIRING #10 AWG UNLESS OTHERWISE NOTED
2. = TWISTED PAIRS.

SII 10 APR 2014

PROPOSED
DESIGN NO. 12-0126
RED-IN YELLOW-OUT

AS INSTALLED
DATE _____
BY _____
(PRINT NAME)

SUPERSEDES IC DRAWING 02935C07.CAD

PROPOSED D	PROPOSED M	PROPOSED Y	REVISIONS	D	C	COMPLETED D	COMPLETED M	COMPLETED Y	C
			REDRAWN			28	07	11	TPF
			FIELD CHECK			03	04	14	SII
10	04	14	M.029.55 UPGRADE	NDH	MRB				

REGION SOUTHERN
SUB. FREEPORT 382

SIGNALS AND COMMUNICATIONS HOMEWOOD
DES. AVS
02 DECEMBER 2003
CH.
SSCCIII 40A CROSSING CONTROLLER
CAROL STREAM, IL
GARY AVE

FRE-029.55-07

DOT# 289 890N

SIEMENS INDUSTRY INC

DES.: NDH	DATE: 03/03/14	JOB NO.: PICA10512	
CKD.: MRB	ISSUE DATE: N/A	EST. NO.: XP-7255	
DRN.: NDH	PLAN NO.: N/A	SHEET 7 OF 9	
P TIME: 15:08	P DATE: 23-APR-2014	CAD ID.: FRE-029.55-07	

SIEMENS INDUSTRY INC
LOUISVILLE DIVISION, LOUISVILLE, KY

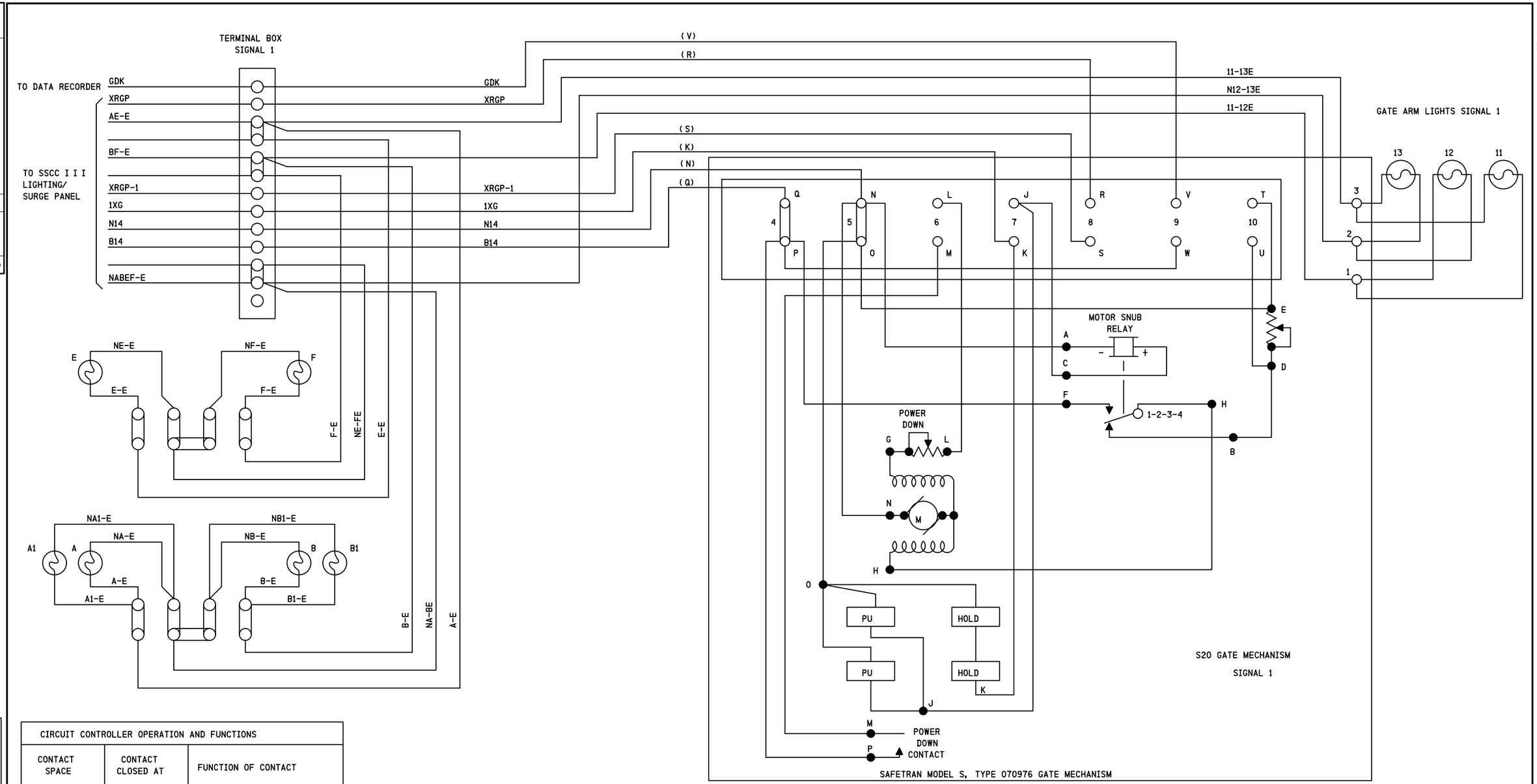

CIRCUIT CONTROLLER OPERATION AND FUNCTIONS		
CONTACT SPACE	CONTACT CLOSED AT	FUNCTION OF CONTACT
L-M	45-90 DEG.	POWER DOWN CONTROL
J-K	0-89 DEG.	POWER UP CONTROL
R-S	83-90 DEG.	GPXR CONTROL
V-W	5-90 DEG.	BELL/GDK
T-U	0-5 DEG.	MOTOR SNUB CONTROL

SUPERSEDES IC DRAWING 02935C08.CAD

PROPOSED D	PROPOSED M	PROPOSED Y	REVISIONS	D	C	COMPLETED D	COMPLETED M	COMPLETED Y	C
			REDRAWN			28	07	11	TPF
			FIELD CHECK			03	04	14	SII

REGION SOUTHERN
SUB. FREEPORT 382

SIGNALS AND COMMUNICATIONS HOMEWOOD
13 FEBRUARY 1989
DES. MSW
CH.

CANTILEVER/GATE MECHANISM #1

CAROL STREAM, IL
GARY AVE

FRE-029.55-08

DOT# 289 890N

fre-029.55-08.dgn
23-APR-2014

REVISIONS				
NO.	DATE	BY	DESCRIPTION	APP. BY
1				
2				
3				
4				
5				

SIEMENS INDUSTRY INC
DES.: NDH | DATE: 03/03/14 | JOB NO.: PICA10512
CKD.: MRB | ISSUE DATE: N/A | EST. NO.: XP-7255
DRN.: NDH | PLAN NO.: N/A | SHEET 8 OF 9
P TIME: 15:08 | P DATE: 23-APR-2014 | CAD ID.: FRE-029.55-08

SIEMENS INDUSTRY INC
LOUISVILLE DIVISION, LOUISVILLE, KY

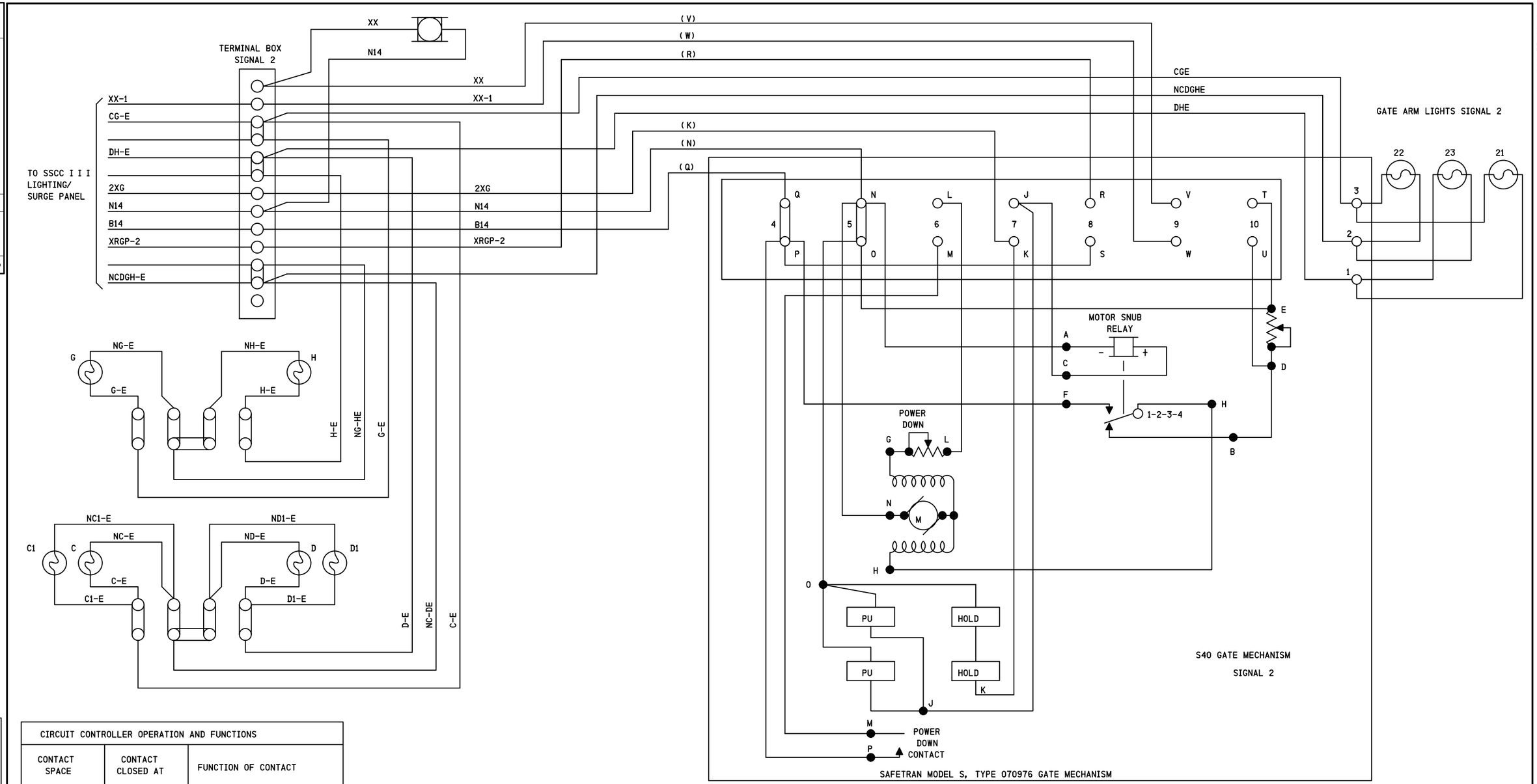

CIRCUIT CONTROLLER OPERATION AND FUNCTIONS		
CONTACT SPACE	CONTACT CLOSED AT	FUNCTION OF CONTACT
L-M	45-90 DEG.	POWER DOWN CONTROL
J-K	0-89 DEG.	POWER UP CONTROL
R-S	83-90 DEG.	GPXR CONTROL
V-W	5-90 DEG.	BELL/GDK
T-U	0-5 DEG.	MOTOR SNUB CONTROL

SII 10 APR 2014

PROPOSED
DESIGN NO. 12-0126
RED-IN YELLOW-OUT

AS INSTALLED
DATE
BY
(PRINT NAME)

SUPERSEDES IC DRAWING 02935C09.CAD

PROPOSED D	PROPOSED M	PROPOSED Y	REVISIONS	D	C	COMPLETED D	COMPLETED M	COMPLETED Y	C
			REDRAWN			28	07	11	TPF
			FIELD CHECK			03	04	14	SII
10	04	14	M.029.55 UPGRADE	NDH	MRB				

REGION SOUTHERN
SUB. FREEPORT 382
SIGNALS AND COMMUNICATIONS HOMEWOOD
DES. MSW
13 FEBRUARY 1989
CH.
CANTILEVER/GATE MECHANISM #2
CAROL STREAM, IL
GARY AVE
FRE-029.55-09
DOT# 289 890N
9 10

REVISIONS

NO.	DATE	BY	DESCRIPTION	APP. BY
1				
2				
3				
4				
5				

SIEMENS INDUSTRY INC
DES.: NDH DATE: 03/03/14 JOB NO.: PICA10512
CKD.: MRB ISSUE DATE: N/A EST. NO.: XP-7255
DRN.: NDH PLAN NO.: N/A SHEET 9 OF 9
P TIME: 15:08 P DATE: 23-APR-2014 CAD ID.: FRE-029.55-09

SIEMENS INDUSTRY INC
LOUISVILLE DIVISION, LOUISVILLE, KY

fre-029.55-09.dgn
23-APR-2014

REVISIONS				
NO.	DATE	BY	DESCRIPTION	APP. BY
1				
2				
3				
4				
5				

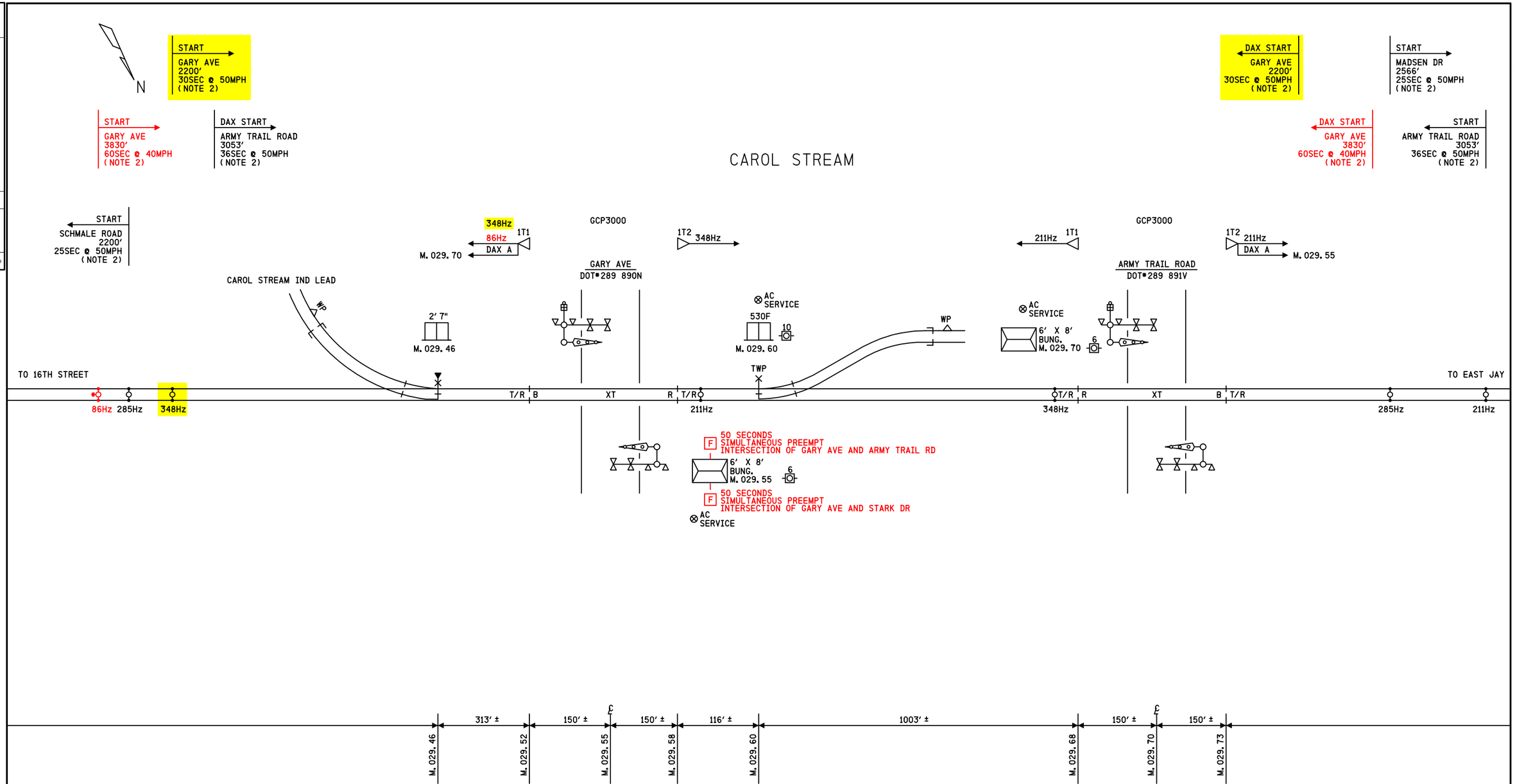

NOTES

1) HIGHWAY CROSSING TRACK CONNECTIONS TO BE 4 WIRE UNLESS NOTED WITH * IN TRACK CIRCUIT, THEN 6 WIRE SEE LOCATION PLAN FOR TRACK WIRING

2) APPROACH DISTANCE MEASURED FROM TRACK LEADS

DENOTES MULTIFREQUENCY NARROW-BAND SHUNT *62775-1543

*DENOTES MULTIFREQUENCY NARROW-BAND SHUNT *62775-8621

SII 03 MAR 2014

PROPOSED
DESIGN NO. 12-0126
RED-IN YELLOW-OUT

AS INSTALLED
DATE _____
BY _____
(PRINT NAME)

PROPOSED D	PROPOSED M	PROPOSED Y	REVISIONS	D	C	COMPLETED D	COMPLETED M	COMPLETED Y	C
			PLAN REDRAWN			03	03	14	NAD
03	03	14	M. 029. 55 UPGRADE	NAD	MRB				

REGION SOUTHERN
SUB. FREEPORT 382

SIGNALS AND COMMUNICATIONS HOMEWOOD
31 JULY 2002
DES. CN
CH. CN

TRACK PLAN
M. 029. 46 TO M. 029. 73

FRE-029. 46-T

SIEMENS INDUSTRY INC

DES. : NAD	DATE: 03/03/14	JOB NO. : PICA10512	
CKD. : BJW	ISSUE DATE: N/A	EST. NO. :XP-7255	
DRN. : NAD	PLAN NO. :N/A	SHEET N/A OF N/A	
P TIME:15:07	P DATE: 23-APR-2014	CAD ID. : FRE-029. 46-T	

SIEMENS INDUSTRY INC
LOUISVILLE DIVISION, LOUISVILLE, KY

fre-029. 46-t. dgn
23-APR-2014