EGMS
PROGRAM INFORMATION

PROGRAM VERSION 2.1

EGMS PARAMETERS

PARAMETER	DEFAULT
PRIMARY MODE	DYNAMIC
SECONDARY MODE	TIMED
DIS ENTR DETS	NO
DELAY ON DOWN	01.0
REV DET ENABLE	NO
DYNAMIC EGCT	000
TIMED EGCT	012
XR DET DISABLE	YES
BIDIR DELAY	04.0
ENTRANCE DOWN REQ	YES
EXIT UP REQ	NO
ISL 2 ENABLE	NO
GATO ALARM DELAY	000
GATO GATE DELAY	005

NOTES

1. EGMS ISL1 INPUT: "AND" ISLAND INPUTS FROM ALL TRACKS. NOTE THAT WHEN THIS INPUT IS DE-ENERGIZED THE XR INPUT ON TB2, 15 & 16 MUST ALSO BE DE-ENERGIZED BEFORE THE EXIT GATES MAY BE DRIVEN DOWN.
2. EGMS ISL2 INPUT: MAY BE USED FOR STAND ALONE ISLAND INPUT. THIS INPUT IS NOT DEPENDENT UPON THE STATUS OF XR INPUT ON TB2, 15 & 16. THIS INPUT MUST BE FIELD SELECTED AND ENABLED DURING EGMS SETUP.
3. ALL WIRING TO EGMS TO BE #16 AWG FLEX.

GATE PARAMETERS

GATE	1	2	3	4	5	6	7	8
GATE TYPE	ENTRANCE	ENTRANCE	EXIT	EXIT	NONE•	NONE•	NONE•	NONE•
GATE DIRECTION	SOUTH	NORTH	SOUTH	NORTH	S/N	S/N	S/N	S/N
VERTICAL CHATTER TIME	00.0	00.0	00.0	00.0	00.0	00.0	00.0	00.0
HORIZONTAL CHATTER TIME	01.0	01.0	01.0	01.0	01.0	01.0	01.0	01.0
MAXIMUM ASCENT TIME	025	025	025	025	025	025	025	025
MAXIMUM DESCENT TIME	025	025	025	025	025	025	025	025

• GATE TYPE = "NONE" ALL OTHER PARAMETERS IGNORED

DETECTOR PARAMETERS

	(1) E-1400				(2) E-1400				(3) E-1400				(4) E-1400			
DETECTOR	1	2	3	4	5	6	7	8	9	10	11	12	13	14	15	16
DETECTOR TYPE	ENTR	ENTR	EXIT	EXIT	NONE	NONE	NONE	NONE	NONE	NONE	NONE	NONE	NONE	NONE	NONE	NONE
DETECTOR DIRECTION	S	N	S	N	S/N	S/N	S/N	S/N	S/N	S/N	S/N	S/N	S/N	S/N	S/N	S/N
STRETCH TIME•	01.0	01.0	01.0	01.0	01.0	01.0	01.0	01.0	01.0	01.0	01.0	01.0	01.0	01.0	01.0	01.0

• INCREASE STRETCH TIME AS NECESSARY TO MAINTAIN VEHICLE DETECTION FROM LOOP TO LOOP.
•• DETECTORS 5 - 16 DEFAULT TO "NONE" AND MUST BE CONFIGURED MANUALLY

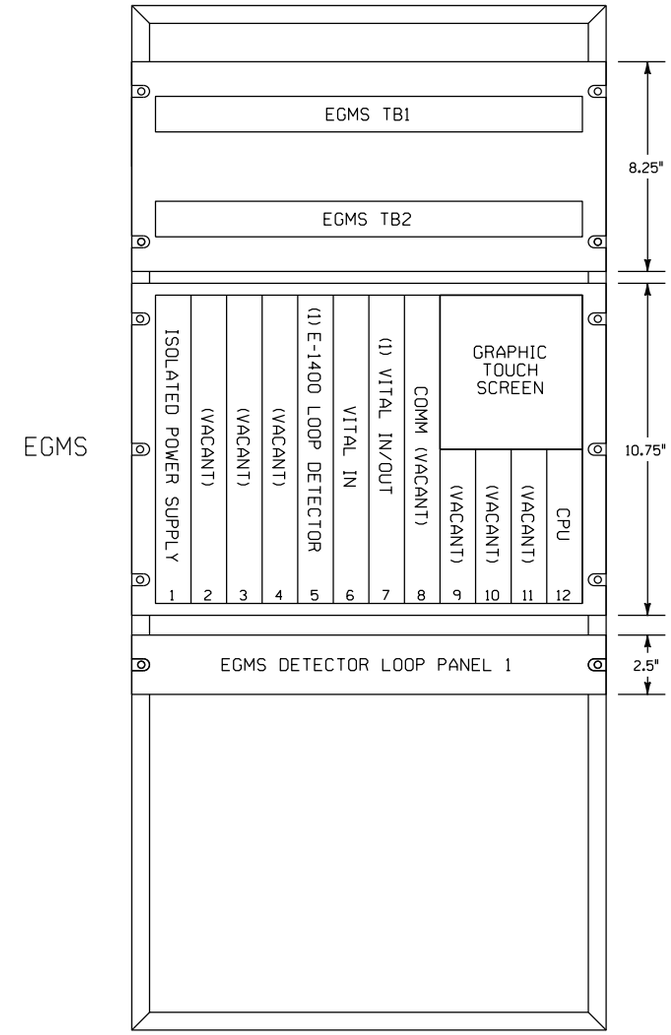

NOTES

1. E-1400 LOOP DETECTOR MODULES AND EGMS DETECTOR LOOP PANELS MAY BE REMOVED AS REQUIRED.

(1) E-1400 SETUP PARAMETERS

FUNCTION	CH. 1	CH. 2	CH. 3	CH. 4
FREQUENCY SETTING	2	4	6	8
SENSITIVIY SETTING	6•	6•	6•	6•
OPTION 1 (TEMP L DISPLAY)	OFF			
OPTION 2 (TEMP ΔL/L DISPLAY)	OFF			
OPTION 3 (NOISE FILTER)	3.00	3.00	3.00	3.00
OPTION 4 (TRACKING)	4.02	4.02	4.02	4.02
OPTION 5 (SENSITIVITY BOOST)	5.00	5.00	5.00	5.00
OPTION 6 (TEMP AUDIBLE SIGNAL)	OFF	OFF	OFF	OFF
CHECKLOOP INTERVAL	005	005	005	005
DETECTOR ID	000			
OPTION 7 (DETECTOR SYNC)	7.00			
OPTION 8 (ISL OPTION)	OFF			
OPTION 9 (SHUNT ENHANCEMENT SE)	OFF	OFF	OFF	OFF
MAIN VITAL OUTPUT DELAY	00.0	00.0	00.0	00.0
MAIN VITAL OUTPUT EXTENSION	00.0	00.0	00.0	00.0
MAIN VITAL OUTPUT MAPPING	10	20	40	80
AUX VITAL OUTPUT MAPPING	001	002	004	008
LOOP FREQUENCY (Khz)				
LOOP INDUCTANCE (MICRO HENRIES)				

SOFTWARE VERSION ___.
• FIELD VERIFY
•• OPTION #8, #9 ONLY AVAILABLE W/ E-1400 SOFTWARE VERSION 4.0 AND HIGHER

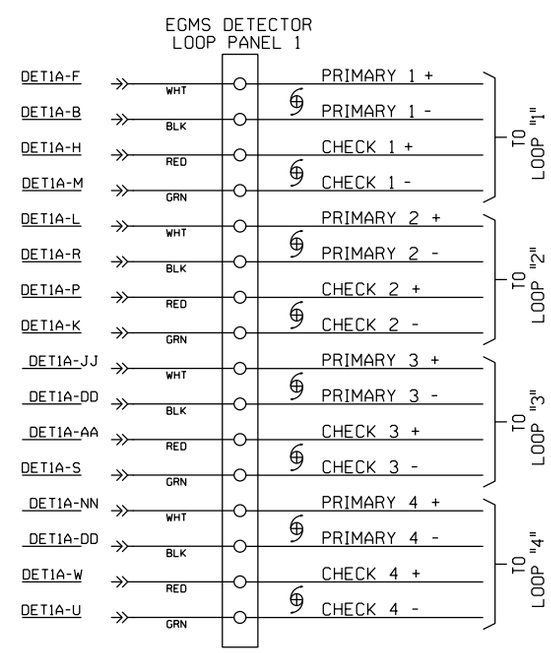

TO BE VOIDED
08/21/12
W.O. 22820 NST/MJF

SHERMAN, ILLINOIS
TR 33 (WOLF CREEK RD)
M.P. 176.60
SPRINGFIELD SUBDIVISION
D.O.T.#294 280R

REV. 6-20-08
UPGRADED CROSSING PROTECTION FOR THE HIGH SPEED RAIL PROJ. FROM MAZONIA TO SPRINGFIELD
W.O. # 00183
REC. #15265
4-8-06 JJF
JR/WITT/WITT/JNM

CIRCUIT MODIFICATIONS ARE NOT TO BE MADE WITHOUT AUTHORITY FROM THE OFFICE OF SIGNAL DESIGN

DES: WITT.IND.
DIG: WITT.IND.
CHK: J.J.F.
A.F.E. 00183
ID= CSL17660.9X

UNION PACIFIC RAILROAD
BLOOMINGTON, ILLINOIS TO VALLEY JCT., ILLINOIS
C.T.C. CIRCUITS
Office of AVP Engineering-Signal OMAHA NEBR.

DATE 6-20-08
SHEET 9
DWG 136.35
RTE-CSL

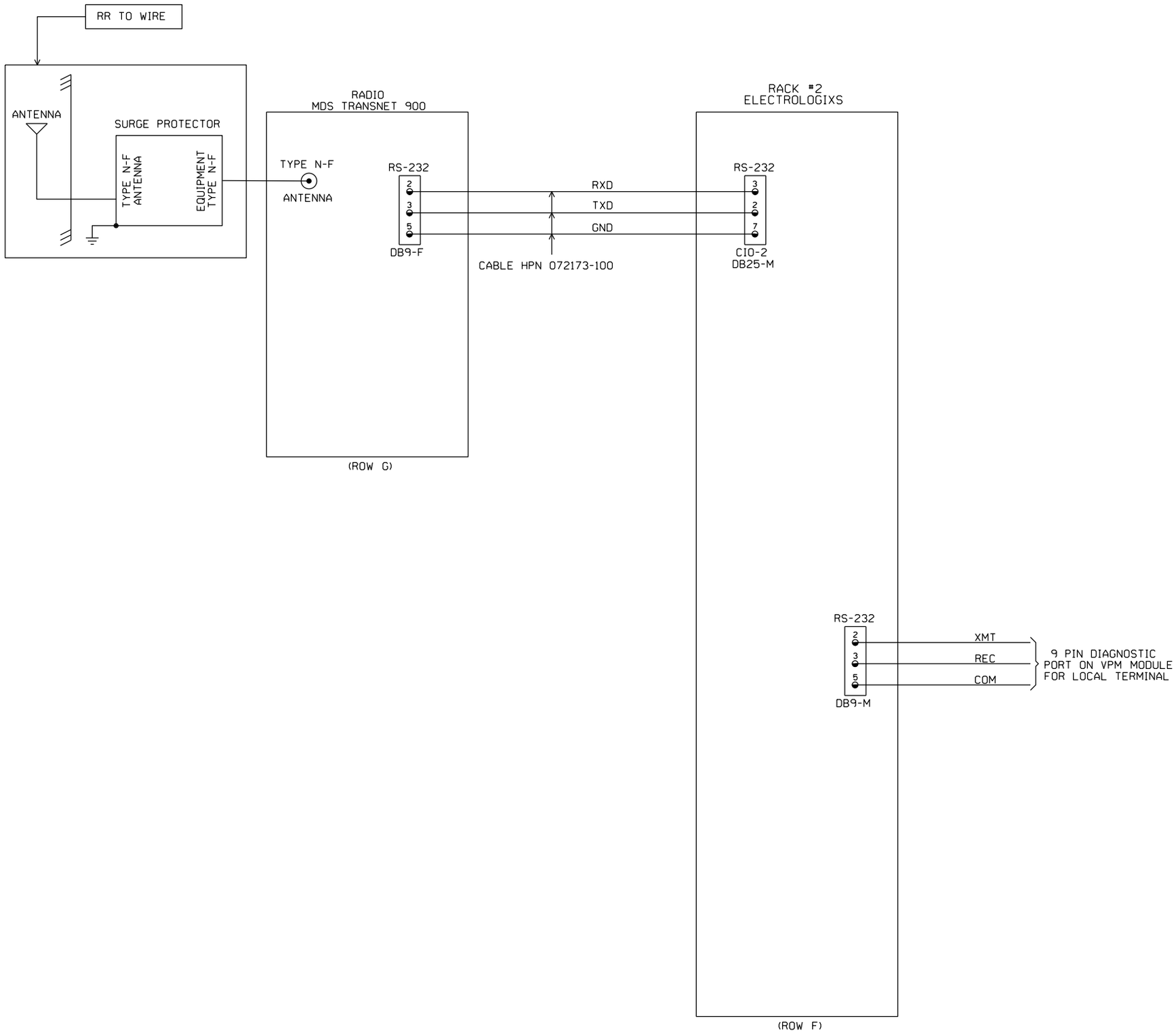

= IN

= OUT

~~NEW SHEET~~

Designed: 08/21/12
TIER 3 PHASE 3
M.P.177.00 TO
M.P.160.00
UPGRADE XINGS AND
CP'S FOR HIGH
SPEED RAIL
Rec*: WO*: 22820
IS: /MWK
/ /NST,MJF

02-24-09
INSTALL MONITOR RACK
FOR XINGS
W.O. 87933 MAS

CIRCUIT MODIFICATIONS ARE NOT TO BE MADE WITHOUT AUTHORITY FROM THE OFFICE OF SIGNAL DESIGN

Date: 09-25-08
Des: CRK
Chk:
AFE: 87933

UNION PACIFIC RAILROAD

SHERMAN, ILLINOIS
TR 33 (WOLF CREEK RD.)
SPRINGFIELD SUBDIVISION

Office of AVP Engineering-Signal Omaha, Nebraska

Sh.: 9B
DOT 294280R
MP: 176.60
ID: CSL17660.9BX

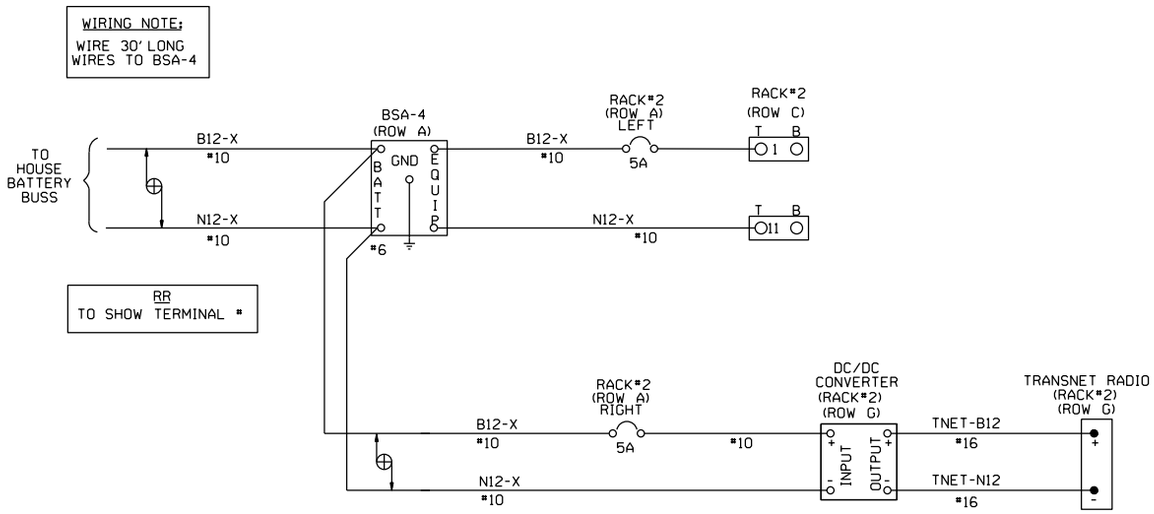

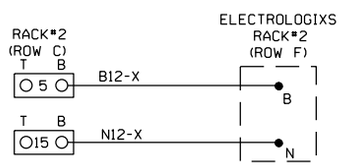

NOTES:

DENOTES TWISTED PAIR

2 POSITION WAGO BLOCK

= IN

= OUT

NEW SHEET

Designed: 08/21/12
TIER 3 PHASE 3
M.P.177.00 TO
M.P.160.00
UPGRADE XINGS AND
CP'S FOR HIGH
SPEED RAIL
Rec#:
IS:
WO#: 22820
/MWK
/NST/MJF

02-24-09
INSTALL MONITOR RACK
FOR XINGS
W.O. 87933 MAS

CIRCUIT MODIFICATIONS ARE NOT TO BE MADE WITHOUT AUTHORITY FROM THE OFFICE OF SIGNAL DESIGN

Date: 09-25-08
Des: CRK
Chk:
AFE: 87933

UNION PACIFIC RAILROAD
SHERMAN, ILLINOIS
TR 33 (WOLF CREEK RD.)
SPRINGFIELD SUBDIVISION
Office of AVP Engineering-Signal Omaha, Nebraska

Sh.: 9C 9B
DOT 294280R
MP: 176.60
ID: CSL17660.9CX
9B

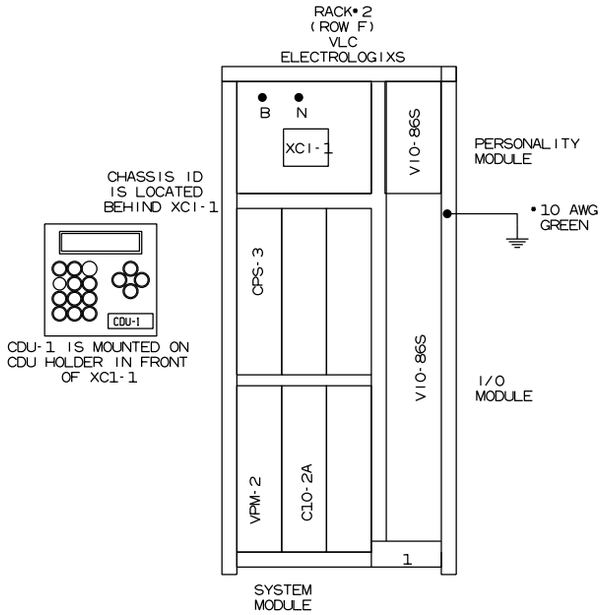

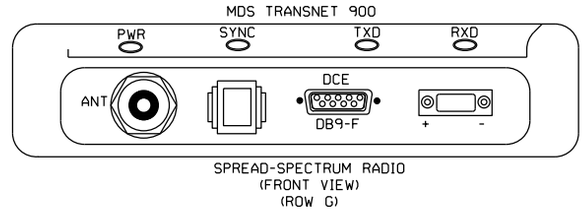

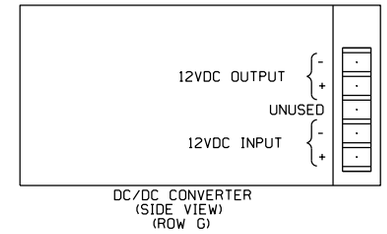

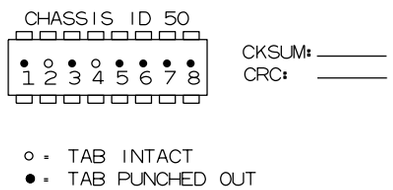

= IN
= OUT

~~NEW SHEET~~

						Designed: 08/21/12 TIER 3 PHASE 3 M.P.177.00 TO M.P.160.00 UPGRADE XINGS AND CP'S FOR HIGH SPEED RAIL Rec*: WO*: 22820 IS: /MWK / /NST/MJF	02-24-09 INSTALL MONITOR RACK FOR XINGS W.O. 87933 MAS	CIRCUIT MODIFICATIONS ARE NOT TO BE MADE WITHOUT AUTHORITY FROM THE OFFICE OF SIGNAL DESIGN	Date: 09-25-08 Des: CRK Chk: AFE: 87933	UNION PACIFIC RAILROAD SHERMAN, ILLINOIS TR 33 (WOLF CREEK RD.) SPRINGFIELD SUBDIVISION Office of AVP Engineering-Signal Omaha, Nebraska	Sh.: 9D 9C DOT 294280R MP: 176.60 ID: CSL17660.9DX

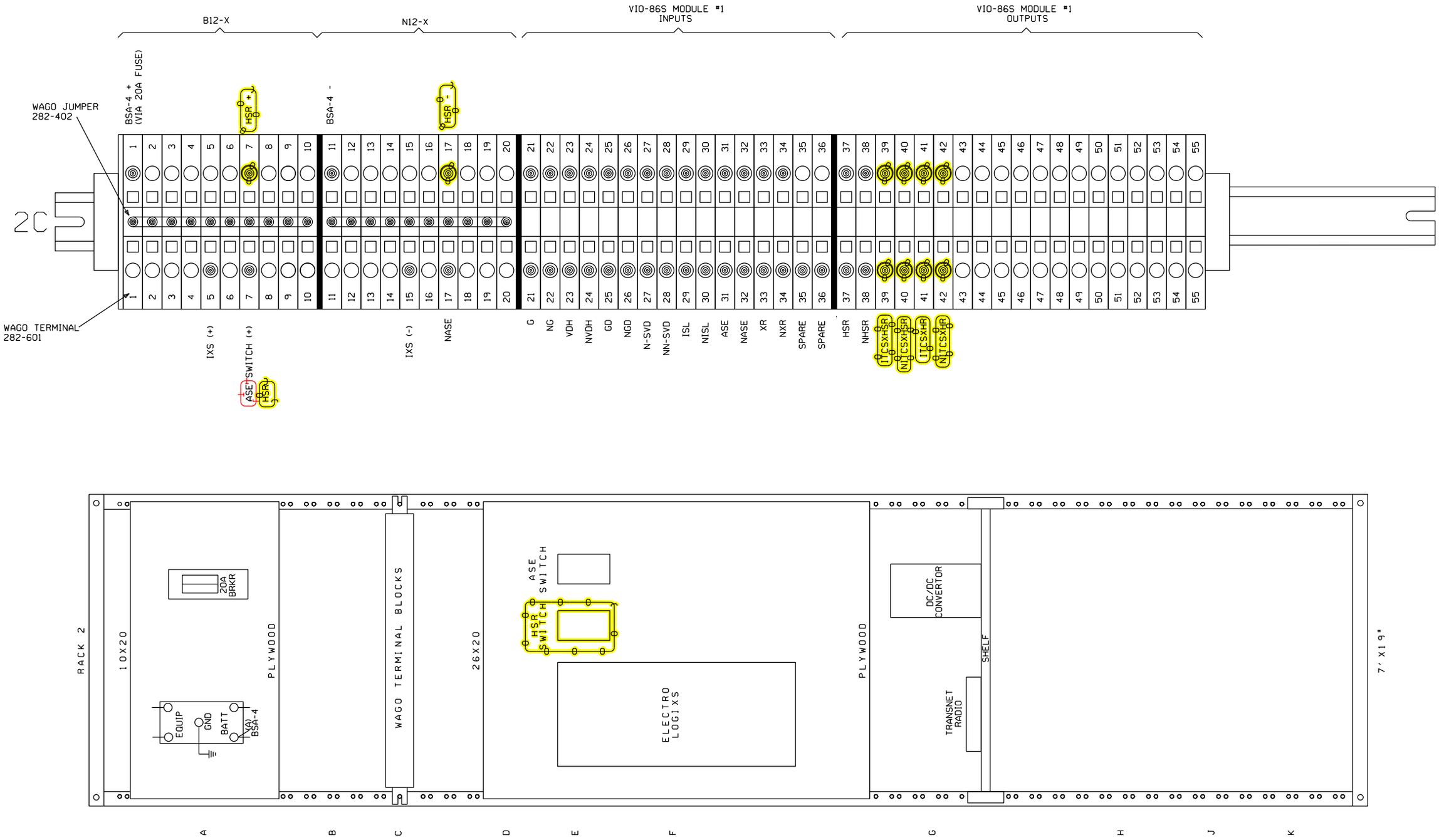

Designed: 08/21/12
TIER 3 PHASE 3
M.P.177.00 TO
M.P.160.00
UPGRADE XINGS AND
CP'S FOR HIGH
SPEED RAIL
Rec#:
IS:
WO#: 22820
/MWK
/NST/MJF

02-24-09
INSTALL MONITOR RACK FOR XINGS
W.O. 87933 MAS

CIRCUIT MODIFICATIONS ARE NOT TO BE MADE WITHOUT AUTHORITY FROM THE OFFICE OF SIGNAL DESIGN

Date:	09-25-08
Des:	CRK
Chk:	
AFE:	87933

UNION PACIFIC RAILROAD

SHERMAN, ILLINOIS
TR 33 (WOLF CREEK RD.)
SPRINGFIELD SUBDIVISION

Office of AVP Engineering-Signal Omaha, Nebraska

Sh.:	9E
DOT	294280R
MP:	176.60
ID:	CSL17660.9EX

EGMS
PROGRAM INFORMATION

PROGRAM VERSION 4.3

EGMS DISPLAY PARAMETERS

PARAMETER	
STARTUP LOGO	UPRR
BACKLIGHT TIMEOUT	015
BUZZER ENABLE	YES
DIRECTION INDICATORS	↓E ↑W
BUNGALOW QUAD	NB EXIT
DISPLAY QZI	NO
LOCAL PREFIX	'R'
REMOTE PREFIX	'T'
CROSSING NAME	TR-33
CROSSING DESCRIPTION	4 QUAD PUB AT GRADE
CROSSING DOT #	294280R

EGMS ALARM PARAMETERS

PARAMETER	
GATO ALARM DELAY	000
GATO GATE DELAY	000
MAX GATE RELEASE	09.0 •
MAX GATE RESPONSE	03.0 •
CYCLE RESTORE	001
MTCD PRESENCE	000
DET FAIL ALARM	YES
DET RESTORE DELAY	000
MAX DET FAILS	000
AUX IN 1 ENABLE	NO
AUX IN 1 RESTORE	000
AUX IN 2 ENABLE	NO
AUX IN 2 RESTORE	000
AUX IN 3 ENABLE	NO
AUX IN 3 RESTORE	000
AUX IN 4 ENABLE	NO
AUX IN 4 RESTORE	000

• ADJUST GATE RELEASE, AND RESPONSE TIMES IN FIELD BASED ON ACTUAL GATE OPERATIONS, AS NECESSARY.

EGMS OPERATIONAL PARAMETERS

PARAMETER	
PRIMARY MODE	DYNAMIC
SECONDARY MODE	NONE
DIS ENTR DETS	NO
DELAY ON DOWN	01.0
REV DET ENABLE	NO
DYNAMIC EGCT	000
TIMED EGCT	012
ISLAND INHIBIT TIME	015
XR DET DISABLE	YES
BIDIR DELAY	04.0
DYN ENTRANCE MONITOR	YES
ENTRANCE DOWN REQ	YES
EXIT UP REQ	NO
EGH SENSE	B12 HOLDS
ISL 2 ENABLE	NO
DUAL EGMS ENABLED	NO

EGMS AUX OUTPUT MAPPING

PARAMETER	
AUX OUT 1 FUNCTION	DET XRISL
AUX OUT 1 SOURCE	BOTH
AUX OUT 2 FUNCTION	DET HLTH
AUX OUT 2 SOURCE	BOTH
AUX OUT 3 FUNCTION	GP
AUX OUT 3 SOURCE	BOTH
AUX OUT 4 FUNCTION	ALARM
AUX OUT 4 SOURCE	BOTH

GATE PARAMETERS

GATE	1(A)	2(B)	3(C)	4(D)	5(E)	6(F)	7(G)	8(H)
GATE TYPE	ENTRANCE	ENTRANCE	EXIT	EXIT	NONE•	NONE•	NONE•	NONE•
GATE DIRECTION	↓E	↑W	↓E	↑W	↓S	↓S	↓S	↓S
VERTICAL CHATTER TIME	01.0	01.0	01.0	01.0	02.0	02.0	02.0	02.0
HORIZONTAL CHATTER TIME	01.0	01.0	01.0	01.0	02.0	02.0	02.0	02.0
MINIMUM ASCENT TIME	003	003	003	003	003	003	003	003
MAXIMUM ASCENT TIME	015	015	015	015	015	015	015	015
MINIMUM DESCENT TIME	003	003	003	003	003	003	003	003
MAXIMUM DESCENT TIME	015	015	015	015	015	015	015	015

• GATE TYPE = "NONE" ALL OTHER PARAMETERS IGNORED

DETECTOR PARAMETERS

	(1) E-1400				(2) E-1400				(3) E-1400				(4) E-1400			
DETECTOR	1	2	3	4	5	6	7	8	9	10	11	12	13	14	15	16
DETECTOR TYPE	ENTR	ENTR	EXIT	EXIT	NONE	NONE	NONE	NONE	NONE	NONE	NONE	NONE	NONE	NONE	NONE	NONE
DETECTOR DIRECTION	↓E	↑W	↓E	↑W	↓S	↑N	↓S	↓S	↓S	↓S	↓S	↓S	↓S	↓S	↓S	↓S
STRETCH TIME•	01.0	01.0	01.0	01.0	01.0	01.0	01.0	01.0	01.0	01.0	01.0	01.0	01.0	01.0	01.0	01.0
LONG-TERM OBSTRUCTION	001	001	001	001	000	000	000	000	000	000	000	000	000	000	000	000
DISABLE ON DOWN	NO	NO	NO	NO	NO	NO	NO	NO	NO	NO	NO	NO	NO	NO	NO	NO
AUX OUTPUT 1	YES	YES	YES	YES	YES	YES	YES	YES	YES	YES	YES	YES	YES	YES	YES	YES
AUX OUTPUT 2	YES	YES	YES	YES	YES	YES	YES	YES	YES	YES	YES	YES	YES	YES	YES	YES
AUX OUTPUT 3	YES	YES	YES	YES	YES	YES	YES	YES	YES	YES	YES	YES	YES	YES	YES	YES
AUX OUTPUT 4	YES	YES	YES	YES	YES	YES	YES	YES	YES	YES	YES	YES	YES	YES	YES	YES

• INCREASE STRETCH TIME AS NECESSARY TO MAINTAIN VEHICLE DETECTION FROM LOOP TO LOOP.
•• DETECTORS 5 - 16 DEFAULT TO "NONE" AND MUST BE CONFIGURED MANUALLY
DETECTORS 5 & 6 DEFAULT TO "INT" WHEN 2TK DEFAULT CONFIGURATION IS SELECTED.
WHEN DETECTOR TYPE IS "NONE", ALL OTHER PARAMETERS IGNORED.

NEW SHEET

Designed: 08/21/12
TIER 3 PHASE 3
M.P.177.00 TO
M.P.160.00
UPGRADE XINGS AND
CP'S FOR HIGH
SPEED RAIL
Rec*: WO*: 22820
IS: /MWK
/ /NST/MJF

MODIFICATION LEVEL	
O.A. LAST LEVEL CHECKED	DU
LAST LEVEL MOD THIS TYPICAL	DU
LAST LEVEL BY DESIGNER	DU
CHANGED FROM TYPICAL?	Y

REV 01.24.11 4K 2TKEGMS.8

CIRCUIT MODIFICATIONS ARE NOT TO BE MADE WITHOUT AUTHORITY FROM THE OFFICE OF SIGNAL DESIGN

Date: 08/21/12
Des: NST
Chk: MWK
AFE: 22820

UNION PACIFIC RAILROAD
SHERMAN, ILLINOIS
TR33 (WOLF CREEK ROAD)
SPRINGFIELD SUBDIVISION
Office of AVP Engineering - Signal Omaha, Nebraska

Sh.: 10
DOT 294280R
MP: 176.68
ID: CSL17668.10X

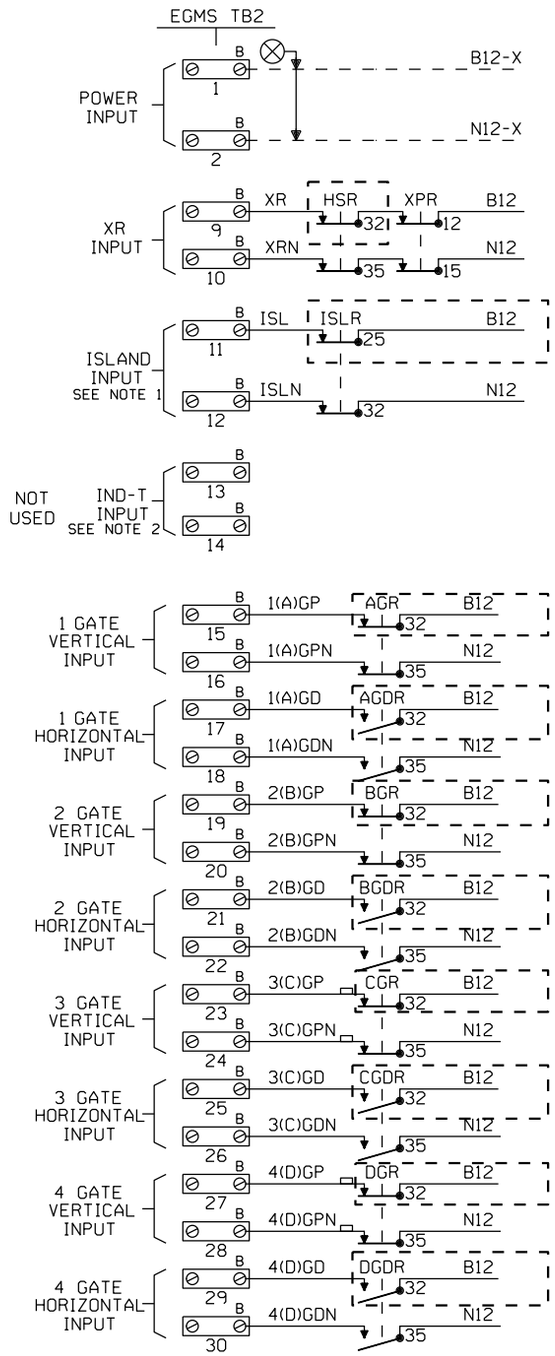

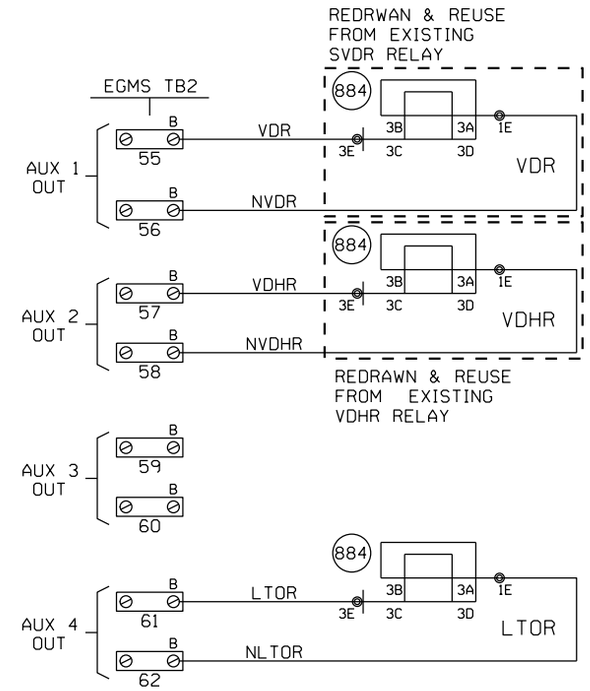

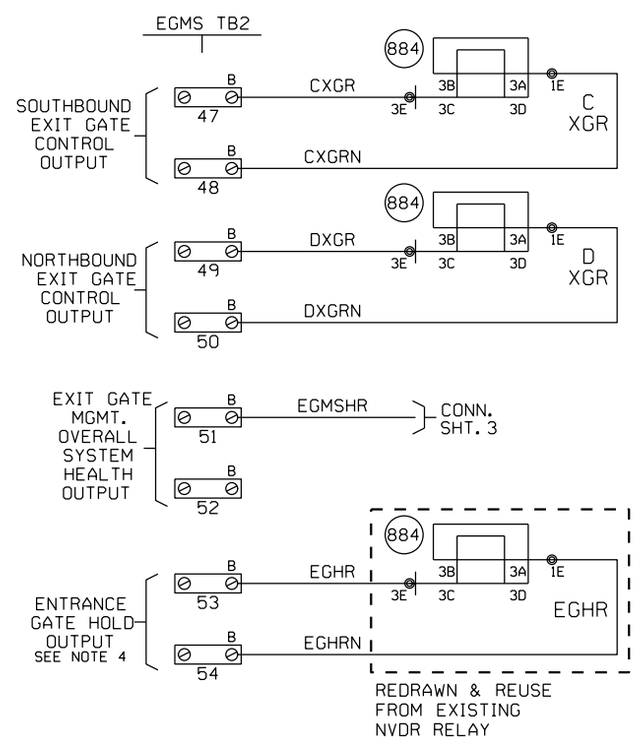

NOTES

1. EGMS ISL1 INPUT: "AND" ISLAND INPUTS FROM ALL TRACKS. NOTE THAT WHEN THIS INPUT IS DE-ENERGIZED THE XR INPUT ON TB2, 9 & 10 MUST ALSO BE DE-ENERGIZED BEFORE THE EXIT GATES MAY BE DRIVEN DOWN.
2. EGMS ISL2 INPUT: MAY BE USED FOR STAND ALONE ISLAND INPUT. THIS INPUT IS NOT DEPENDENT UPON THE STATUS OF XR INPUT ON TB2, 9 & 10. THIS INPUT MUST BE FIELD SELECTED AND ENABLED DURING EGMS SETUP.
3. ALL WIRING TO EGMS TO BE #16 AWG FLEX.
4. ENTRANCE GATE HOLD (EGH) CAN BE PROGRAMMED AS A NORMALLY ENERGIZED OR NORMALLY DE-ENERGIZED OUTPUT.

- - - - = REDRAWN & REUSED FROM SHEET 2

NEW SHEET

Designed: 08/21/12
TIER 3 PHASE 3
M.P.177.00 TO M.P.160.00
UPGRADE XINGS AND CP'S FOR HIGH SPEED RAIL
Rec#: WO#: 22820
IS: / /MWK / /NST/MJF

MODIFICATION LEVEL	
Q.A. LAST LEVEL CHECKED	DU
LAST LEVEL MOD THIS TYPICAL	DU
LAST LEVEL BY DESIGNER	DU
CHANGED FROM TYPICAL?	Y

REV 01.24.11 4K 2TKEGMS.8A

CIRCUIT MODIFICATIONS ARE NOT TO BE MADE WITHOUT AUTHORITY FROM THE OFFICE OF SIGNAL DESIGN

Date: 08/21/12
Des: NST
Chk: MWK
AFE: 22820

UNION PACIFIC RAILROAD
SHERMAN, ILLINOIS
TR33 (WOLF CREEK ROAD)
SPRINGFIELD SUBDIVISION
Office of AVP Engineering - Signal Omaha, Nebraska

Sh.: 10A
DOT 294280R
MP: 176.68
ID: CSL17668.10AX

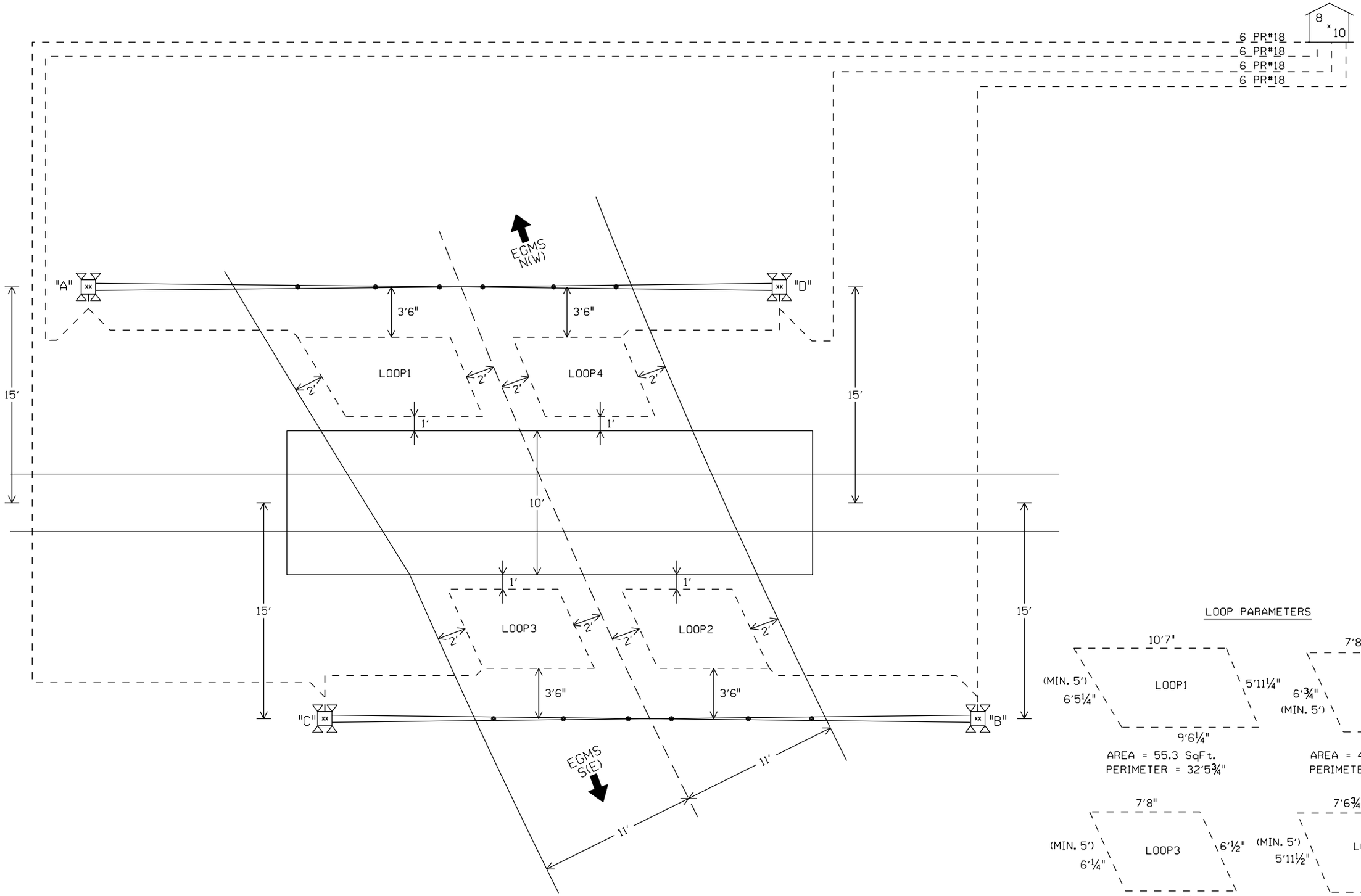

LOOP PARAMETERS

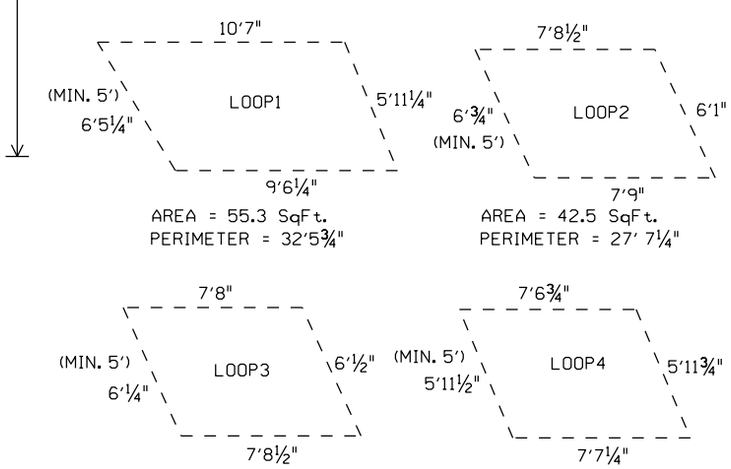

NOTES:

1. DIMENSIONS ON THIS PAGE ARE SHOWN TO PROVIDE GUIDANCE FOR CONSTRUCTION CREWS AND FUTURE MAINTENANCE REPAIRS.
2. REFER TO SAFETRAN EGMS STANDARDS AND RECOMENDED PRACTICES FOR LOOP LAYOUT DESIGN DETAILS.
3. SAFETRAN EGMS JUNCTION BOX INSTALLED ON TOP OF EACH FOUNDATION.
4. INSTALL SAFETRAN 6 PAIR #18 CABLE FROM JUNCTION BOX TO BUNGALOW.

℄ +

LOOP PLACEMENT SKETCH

NOT TO SCALE

LOOP SIZES

LOOP #	LOOP PERIMETER	LOOP LEAD-IN	PART #
1	33'	25'	PLC-33-25
2	28'	25'	PLC-28-25
3	28'	25'	PLC-28-25
4	28'	25'	PLC-28-25

NEW SHEET

Designed: 08/21/12
TIER 3 PHASE 3
M.P.177.00 TO M.P.160.00
UPGRADE XINGS AND CP'S FOR HIGH SPEED RAIL
Rec#: WO#: 22820
IS: /MWK
/NST/MJF

MODIFICATION LEVEL	
O. A. LAST LEVEL CHECKED	DU
LAST LEVEL MOD THIS TYPICAL	DU
LAST LEVEL BY DESIGNER	DU
CHANGED FROM TYPICAL?	Y

REV 01.24.11 4K 2TKEGMS.8B

CIRCUIT MODIFICATIONS ARE NOT TO BE MADE WITHOUT AUTHORITY FROM THE OFFICE OF SIGNAL DESIGN

Date: 08/21/12
Des: NST
Chk: MWK
AFE: 22820

UNION PACIFIC RAILROAD

SHERMAN, ILLINOIS
TR33 (WOLF CREEK ROAD)
SPRINGFIELD SUBDIVISION

Office of AVP Engineering - Signal Omaha, Nebraska

Sh.: 10B
DOT 294280R
MP: 176.68
ID: CSL17668.10BX

(1) E-1400 SETUP PARAMETERS

FUNCTION	CH. 1	CH. 2	CH. 3	CH. 4
FREQUENCY SETTING	2	4	6	8
SENSITIVIY SETTING	6•	6•	6•	6•
OPTION 1 (TEMP L DISPLAY)	OFF			
OPTION 2 (TEMP ΔL/L DISPLAY)	OFF			
OPTION 3 (NOISE FILTER)	3.00	3.00	3.00	3.00
OPTION 4 (TRACKING)	4.02	4.02	4.02	4.02
OPTION 5 (SENSITIVITY BOOST)	5.00	5.00	5.00	5.00
OPTION 6 (TEMP AUDIBLE SIGNAL)	OFF	OFF	OFF	OFF
CHECKLOOP INTERVAL	005	005	005	005
DETECTOR ID	000			
OPTION 7 (DETECTOR SYNC)	7.01			
OPTION 8 (ISL OPTION)	OFF			
OPTION 9 (SHUNT ENHANCEMENT SE)	OFF	OFF	OFF	OFF
MAIN VITAL OUTPUT DELAY	00.0	00.0	00.0	00.0
MAIN VITAL OUTPUT EXTENSION	00.0	00.0	00.0	00.0
MAIN VITAL OUTPUT MAPPING	10	20	40	80
AUX VITAL OUTPUT MAPPING	001	002	004	008
LOOP FREQUENCY (Khz)				
LOOP INDUCTANCE (MICRO HENRIES)				

SOFTWARE VERSION 4.02
• FIELD VERIFY

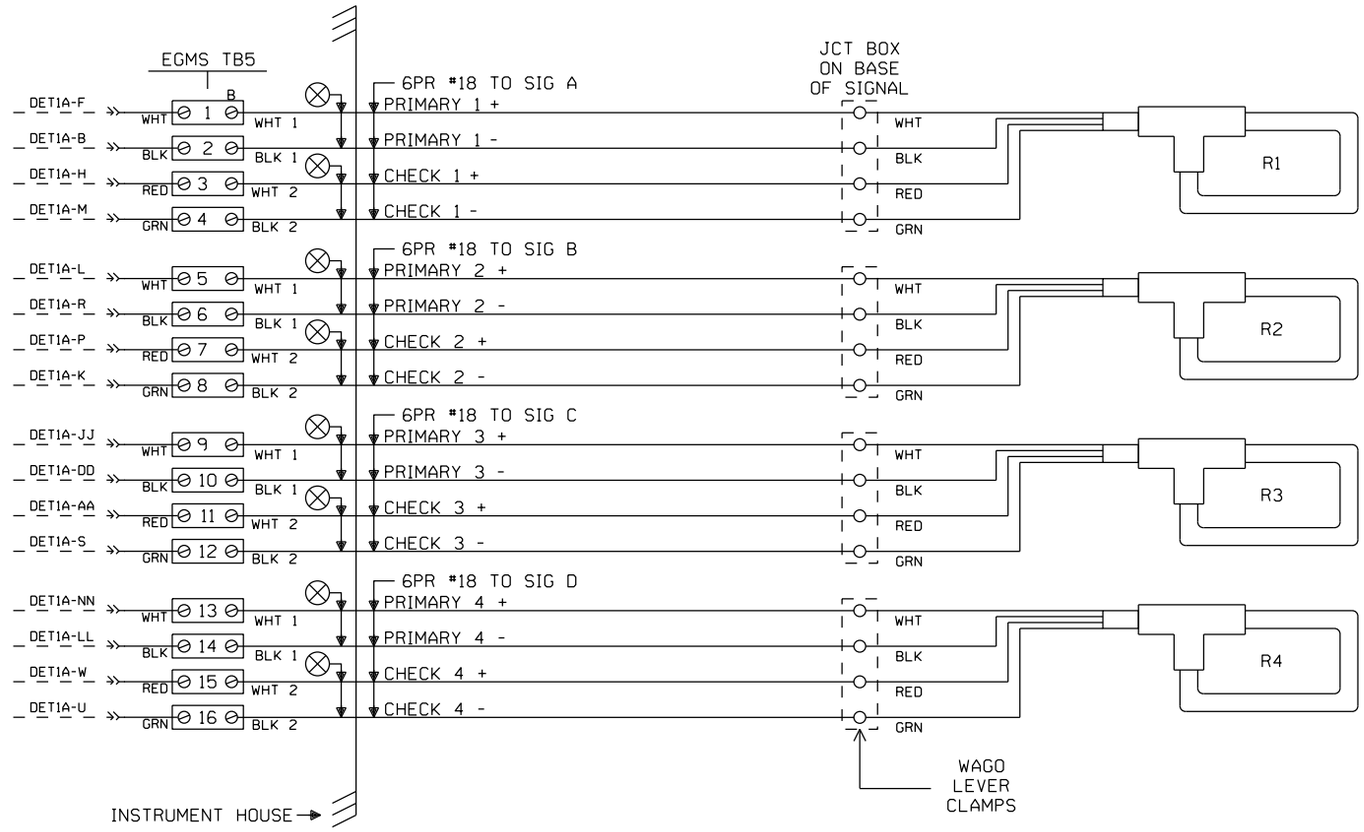

CABLE TABULATION

CABLE NO. (13) 6/PR #18 U.G.C. TO JCT BOX ON BASE OF GATE "A" (RCL PART #03-094-005)
CABLE NO. (14) 6/PR #18 U.G.C. TO JCT BOX ON BASE OF GATE "B" (RCL PART #03-094-005)
CABLE NO. (15) 6/PR #18 U.G.C. TO JCT BOX ON BASE OF GATE "C" (RCL PART #03-094-005)
CABLE NO. (16) 6/PR #18 U.G.C. TO JCT BOX ON BASE OF GATE "D" (RCL PART #03-094-005)

NEW SHEET

Designed: 08/21/12
TIER 3 PHASE 3
M.P.177.00 TO
M.P.160.00
UPGRADE XINGS AND
CP'S FOR HIGH
SPEED RAIL
Rec*: WO*:22820
IS: /MWK
/ /NST/MJF

MODIFICATION LEVEL	
O. A. LAST LEVEL CHECKED	DU
LAST LEVEL MOD THIS TYPICAL	DU
LAST LEVEL BY DESIGNER	DU
CHANGED FROM TYPICAL?	Y

REV 01.24.11 4K 2TKEGMS.9

CIRCUIT MODIFICATIONS ARE NOT TO BE MADE WITHOUT AUTHORITY FROM THE OFFICE OF SIGNAL DESIGN

Date: 08/21/12
Des: NST
Chk: MWK
AFE: 22820

UNION PACIFIC RAILROAD
SHERMAN, ILLINOIS
TR33 (WOLF CREEK ROAD)
SPRINGFIELD SUBDIVISION
Office of AVP Engineering - Signal Omaha, Nebraska

Sh.: 10C
DOT 294280R
MP: 176.68
ID: CSL17668.10CX

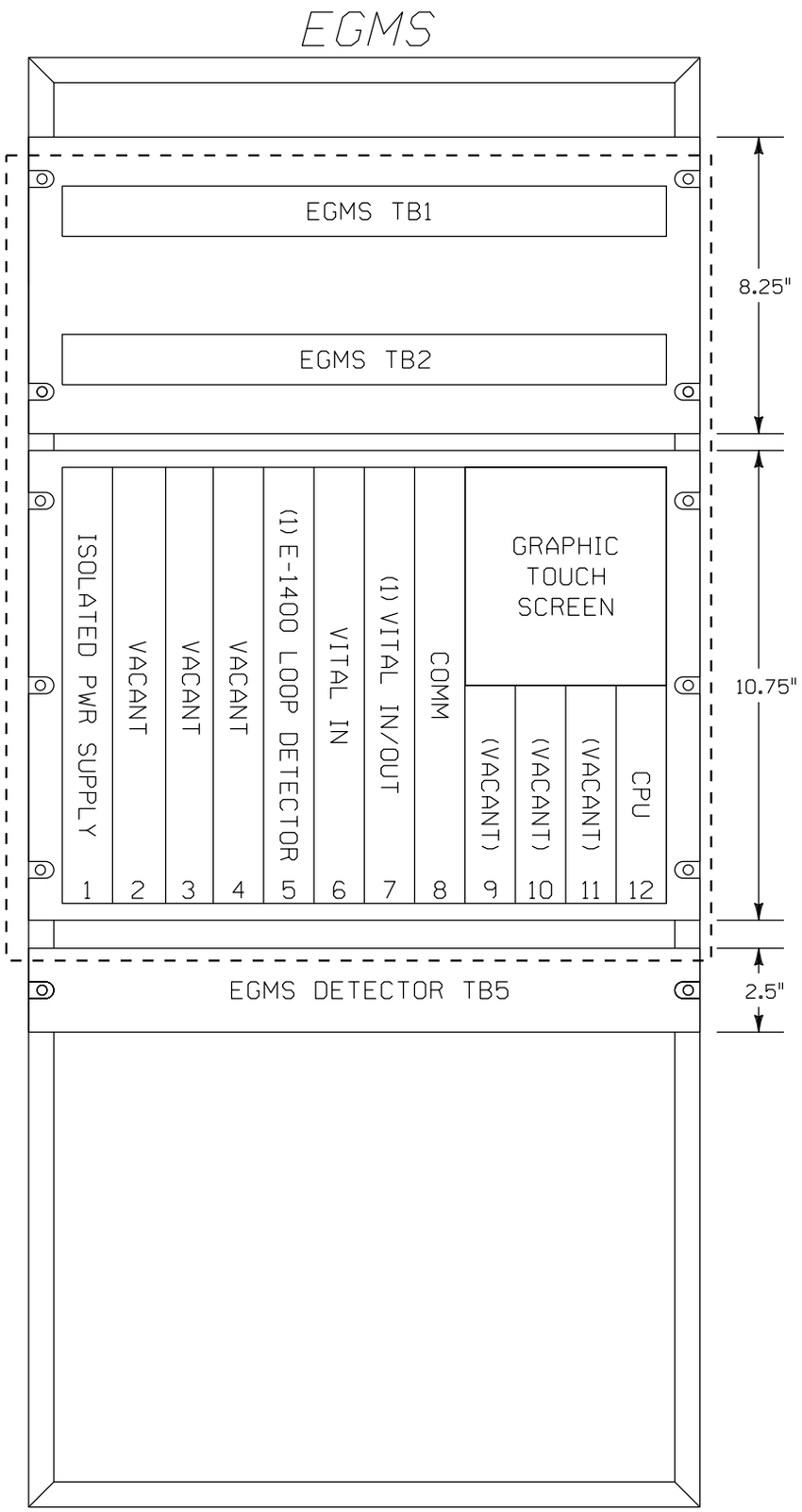

- - - - = EXISTING

NEW SHEET

Designed: 08/21/12
TIER 3 PHASE 3
M.P.177.00 TO
M.P.160.00
UPGRADE XINGS AND
CP'S FOR HIGH
SPEED RAIL
Rec#:
IS:
WO#: 22820
/MWK
/NST/MJF

MODIFICATION LEVEL	
O. A. LAST LEVEL CHECKED	DU
LAST LEVEL MOD THIS TYPICAL	DU
LAST LEVEL BY DESIGNER	DU
CHANGED FROM TYPICAL?	Y

REV 01.24.11 4K 2TKEGMS.9B

CIRCUIT MODIFICATIONS ARE NOT TO BE MADE WITHOUT AUTHORITY FROM THE OFFICE OF SIGNAL DESIGN

Date: 08/21/12
Des: NST
Chk: MWK
AFE: 22820

UNION PACIFIC RAILROAD

SHERMAN, ILLINOIS
TR33 (WOLF CREEK ROAD)
SPRINGFIELD SUBDIVISION

Office of AVP Engineering - Signal — Omaha, Nebraska

Sh.: 10D
DOT 294280R
MP: 176.68
ID: CSL17668.10DX

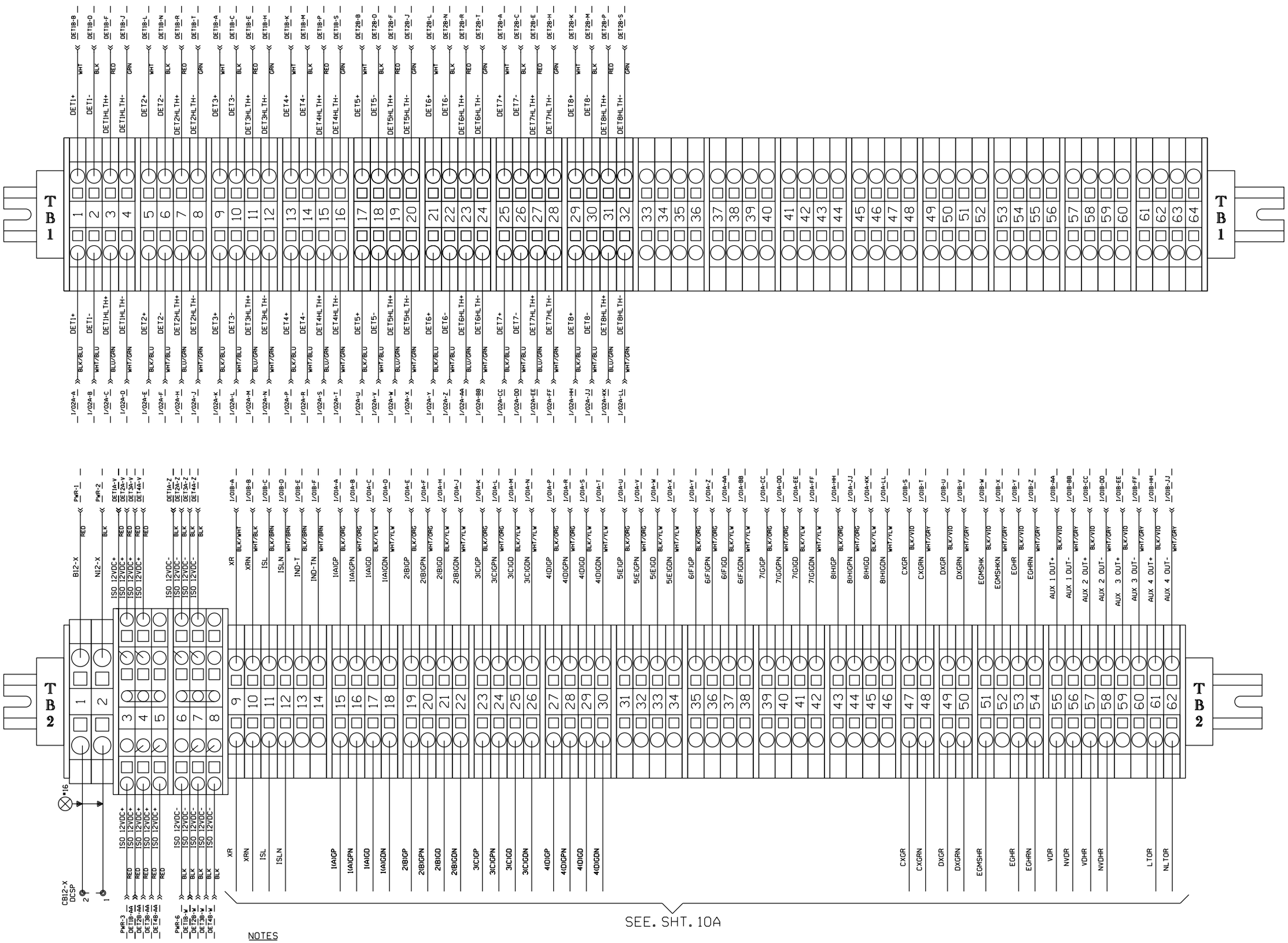

NOTES

1. TB1 PROVIDES AN EXTERNAL PASS THROUGH BETWEEN THE E-1400 MODULES AND THE VITAL INPUT MODULE IN CHASSIS POSITION 6. EGMS OR EGMS+ UNITS CONFIGURED FOR LESS THAN 4 EACH E-1400 MODULES WILL ONLY BE WIRED AS REQUIRED.
2. TB2-3 THROUGH TB2-8 PROVIDE A CONNECTION BUS FOR INTERNAL SUPPLY VOLTAGES AND MUST NOT BE USED TO SUPPLY OTHER CIRCUITS.

NEW SHEET

Designed: 08/21/12
TIER 3 PHASE 3
M.P.177.00 TO
M.P.160.00
UPGRADE XINGS AND
CP'S FOR HIGH
SPEED RAIL
Rec*: WO*:22820
IS: /MWK
/ /NST/MJF

MODIFICATION LEVEL	
O. A. LAST LEVEL CHECKED	DU
LAST LEVEL MOD THIS TYPICAL	DU
LAST LEVEL BY DESIGNER	DU
CHANGED FROM TYPICAL?	Y

REV 01.24.11 4K 2TKEGMS.9C

CIRCUIT MODIFICATIONS ARE NOT TO BE MADE WITHOUT AUTHORITY FROM THE OFFICE OF SIGNAL DESIGN

Date: 08/21/12
Des: NST
Chk: MWK
AFE: 22820

UNION PACIFIC RAILROAD
SHERMAN, ILLINOIS
TR33 (WOLF CREEK ROAD)
SPRINGFIELD SUBDIVISION
Office of AVP Engineering - Signal Omaha, Nebraska

Sh.: 10E
DOT 294280R
MP: 176.68
ID: CSL17668.10EX

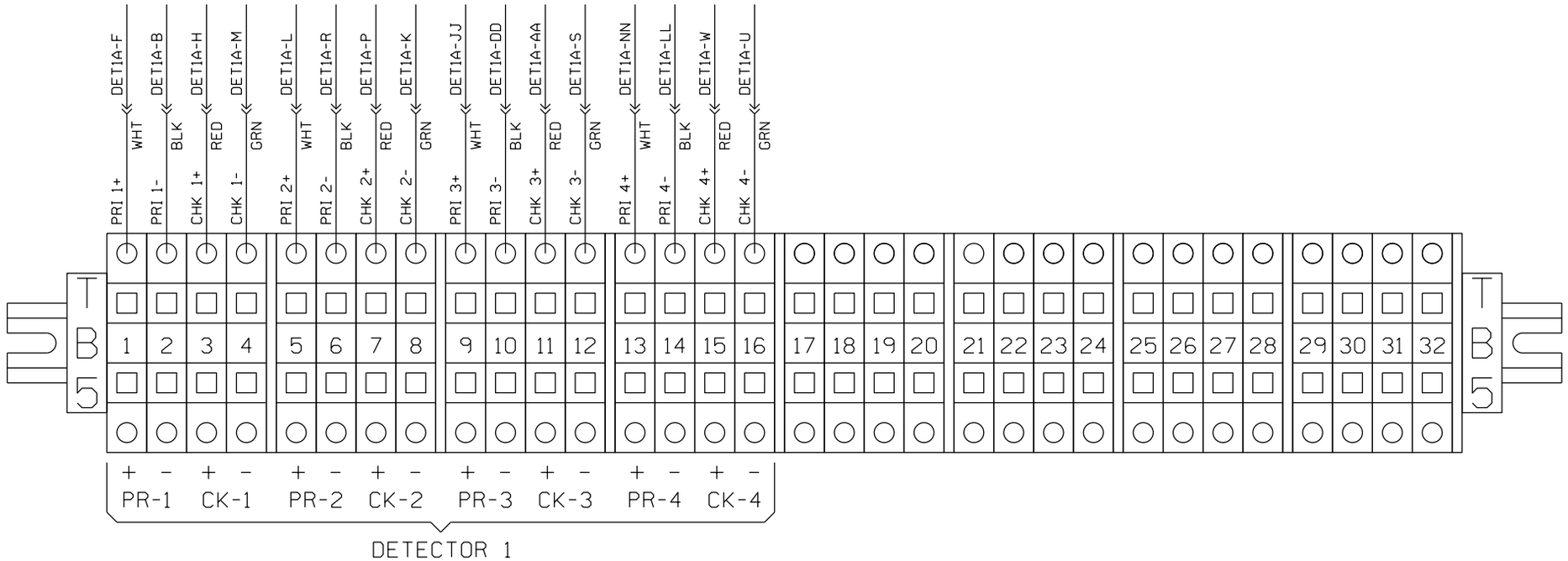

NEW SHEET

					Designed: 08/21/12 TIER 3 PHASE 3 M.P.177.00 TO M.P.160.00 UPGRADE XINGS AND CP'S FOR HIGH SPEED RAIL Rec#: WO#: 22820 IS: /MWK / /NST/MJF	MODIFICATION LEVEL O. A. LAST LEVEL CHECKED DU LAST LEVEL MOD THIS TYPICAL DU LAST LEVEL BY DESIGNER DU CHANGED FROM TYPICAL? Y REV 01.24.11 4K 2TKEGMS.9D	CIRCUIT MODIFICATIONS ARE NOT TO BE MADE WITHOUT AUTHORITY FROM THE OFFICE OF SIGNAL DESIGN	Date: 08/21/12 Des: NST Chk: MWK AFE: 22820	UNION PACIFIC RAILROAD SHERMAN, ILLINOIS TR33 (WOLF CREEK ROAD) SPRINGFIELD SUBDIVISION Office of AVP Engineering - Signal Omaha, Nebraska	Sh.: 10F DOT 294280R MP: 176.68 ID: CSL17668.10FX

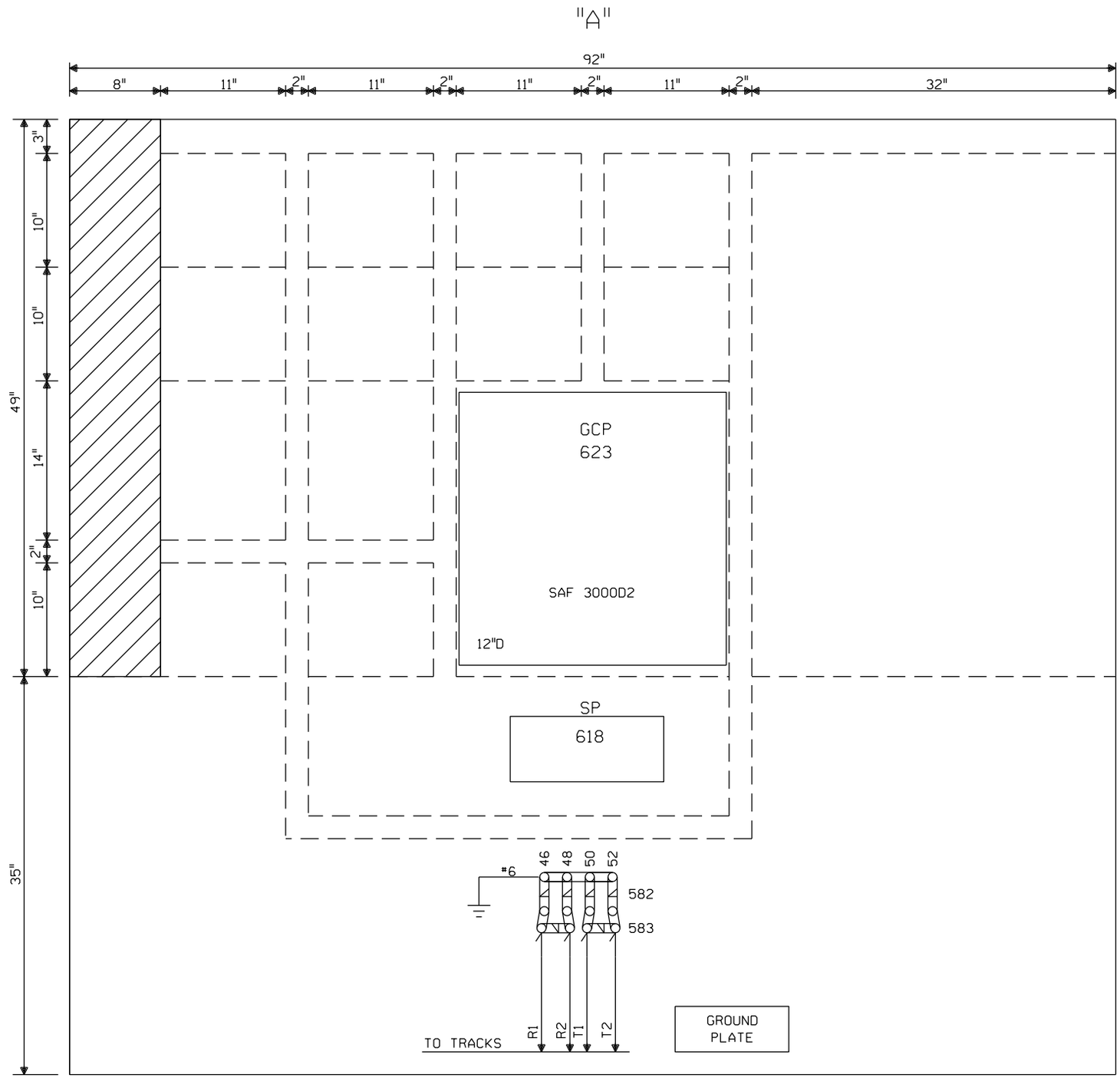

TWO CABLE ENTRANCES ON THIS WALL

0 1 2 3 4 FEET

SCALE: 1.5 INCHES = 1 FOOT

= IN
= OUT

SHERMAN, ILLINOIS
TR 33 (WOLF CREEK RD)
M.P.176.60
SPRINGFIELD SUBDIVISION
D.O.T.#294 280R

Designed: 08/21/12
TIER 3 PHASE 3
M.P.177.00 TO
M.P.160.00
UPGRADE XINGS AND
CP'S FOR HIGH
SPEED RAIL
Rec#: WO#: 22820
IS: /MWK
/NST/MJF

REV. 6-20-08
UPGRADED CROSSING
PROTECTION FOR THE
HIGH SPEED RAIL
PROJ. FROM MAZONIA
TO SPRINGFIELD
W.O. # 00183
REC. #15265
4-8-06 JJF
JR/WITT/WITT/JNM

MODIFICATION LEVEL	
Q.A. LAST LEVEL CHK'D.	DA
LAST LEVEL MOD. THIS TYP.	CZ
LAST LEVEL BY DESIGNER.	DD
CHANGED FROM TYP.? Y/N	Y

CIRCUIT MODIFICATIONS ARE NOT TO BE MADE WITHOUT AUTHORITY FROM THE OFFICE OF SIGNAL DESIGN

DES: WITT.IND.
DIG: WITT.IND.
CHK: J.J.F.
A.F.E. 00183
ID= CSL17660.10X
CSL17668.11X

UNION PACIFIC RAILROAD
BLOOMINGTON, ILLINOIS TO
VALLEY JCT., ILLINOIS
C.T.C. CIRCUITS
Office of AVP Engineering-Signal OMAHA NEBR.

DATE 4-1-02
SHEET 10-11
DWG 176.60
RTE-CSL

(REV. 7-9-00)(HOUSE.TYP)

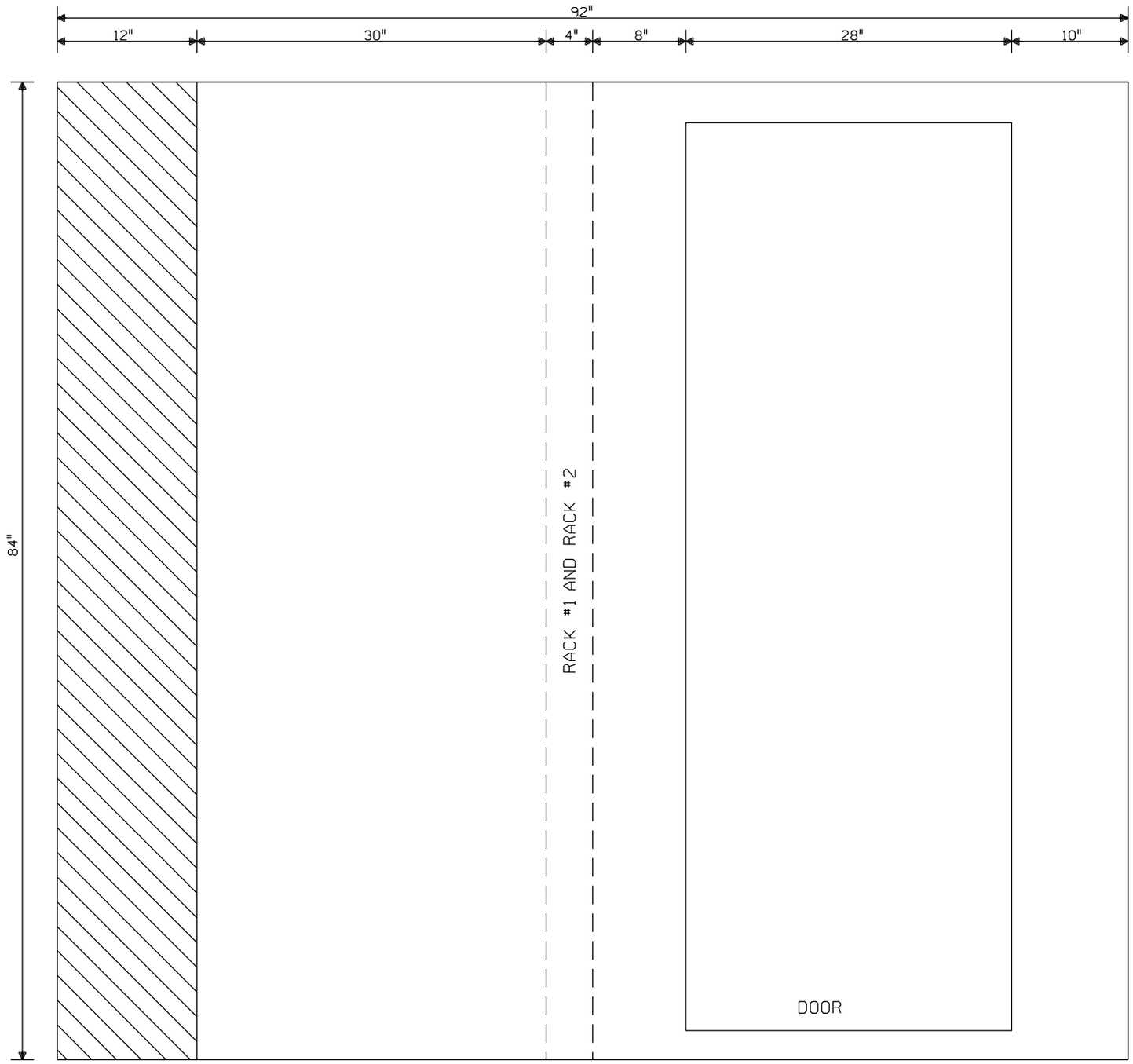

PLAN VIEW
8'x8' HOUSE
—NO SCALE—

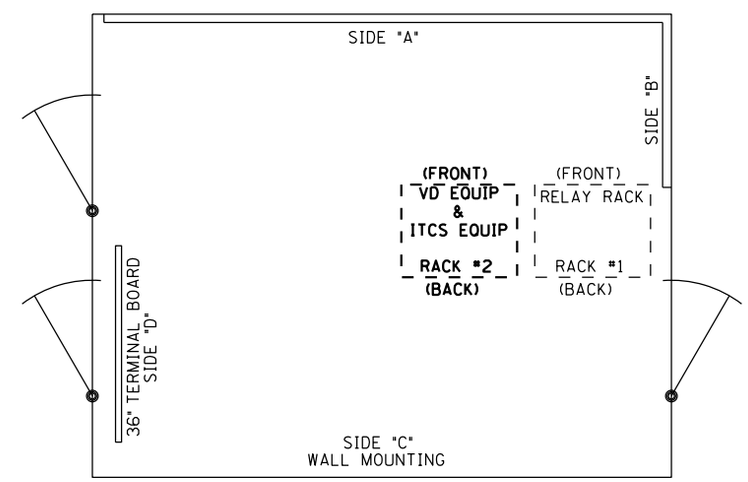

FIELD TO VERIFY LOCATION OF ANTENNAS, AND SURGE SUPPRESSORS FOR ATENNAS.

= IN

= OUT

0 1 2 3 4 FEET

SCALE: 1.5 INCHES = 1 FOOT

= IN

= OUT

SHERMAN, ILLINOIS
TR 33 (WOLF CREEK RD)
M.P.176.60
SPRINGFIELD SUBDIVISION
D.O.T.#294 280R

Designed: 08/21/12
TIER 3 PHASE 3
M.P.177.00 TO
M.P.160.00
UPGRADE XINGS AND
CP'S FOR HIGH
SPEED RAIL
Rec#: WO#: 22820
IS: /MWK
/ /NST/MJF

02-24-09
INSTALL MONITOR RACK
FOR XINGS
W.O. 87933 MAS

REV. 6-20-08
UPGRADED CROSSING
PROTECTION FOR THE
HIGH SPEED RAIL
PROJ. FROM MAZONIA
TO SPRINGFIELD
W.O. # 00183
REC. #15265
4-8-06 JJF
JR/WITT/WITT/JNM

MODIFICATION LEVEL	
Q.A. LAST LEVEL CHK'D.	DA
LAST LEVEL MOD. THIS TYP.	CZ
LAST LEVEL BY DESIGNER.	DD
CHANGED FROM TYP.? Y/N	Y

CIRCUIT MODIFICATIONS ARE NOT TO BE MADE WITHOUT AUTHORITY FROM THE OFFICE OF SIGNAL DESIGN

DES: WITT.IND.
DIG: WITT.IND.
CHK: J.J.F.
A.F.E. 00183
ID= CSL17660.11X
CSL17668.12X

UNION PACIFIC RAILROAD
BLOOMINGTON, ILLINOIS TO
VALLEY JCT., ILLINOIS
C.T.C. CIRCUITS
Office of AVP Engineering-Signal OMAHA NEBR.

DATE 4-1-02
SHEET 11 12
DWG 176.60
RTE-CSL

(REV. 7-9-00) (HOUSE.TYP)

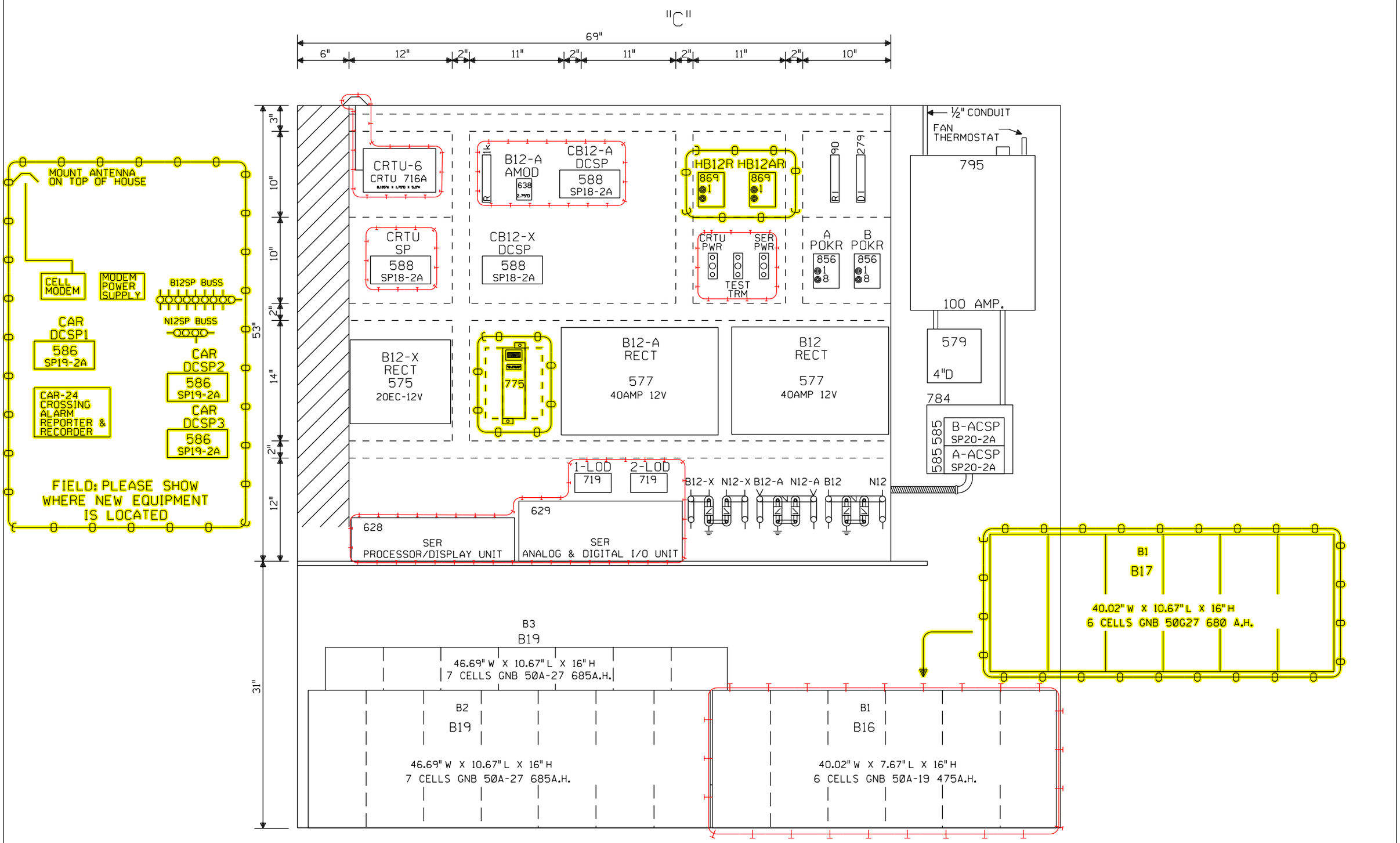

SHERMAN, ILLINOIS
TR 33 (WOLF CREEK RD)
M.P.176.60
SPRINGFIELD SUBDIVISION
D.O.T.#294 280R

Designed: 08/21/12
TIER 3 PHASE 3
M.P.177.00 TO M.P.160.00
UPGRADE XINGS AND CP'S FOR HIGH SPEED RAIL
Rec#: WO#: 22820
IS: /MWK /NST/MJF

REV. 6-20-08
UPGRADED CROSSING PROTECTION FOR THE HIGH SPEED RAIL PROJ. FROM MAZONIA TO SPRINGFIELD
W.O. # 00183
REC. #15265
4-8-06 JJF
JR/WITT/WITT/JNM

MODIFICATION LEVEL	
Q.A. LAST LEVEL CHK'D.	DA
LAST LEVEL MOD. THIS TYP.	CZ
LAST LEVEL BY DESIGNER.	DD
CHANGED FROM TYP.? Y/N	Y

CIRCUIT MODIFICATIONS ARE NOT TO BE MADE WITHOUT AUTHORITY FROM THE OFFICE OF SIGNAL DESIGN

DES: WITT.IND.
DIG: WITT.IND.
CHK: J.J.F.
A.F.E. 00183
ID= CSL17660.12X, CSL17668.13X

UNION PACIFIC RAILROAD
BLOOMINGTON, ILLINOIS TO VALLEY JCT., ILLINOIS
C.T.C. CIRCUITS
Office of AVP Engineering-Signal OMAHA NEBR.

DATE 4-1-02
SHEET 12 of 13
DWG 176.60
RTE-CSL

(REV. 7-9-00) (HOUSE.TYP)

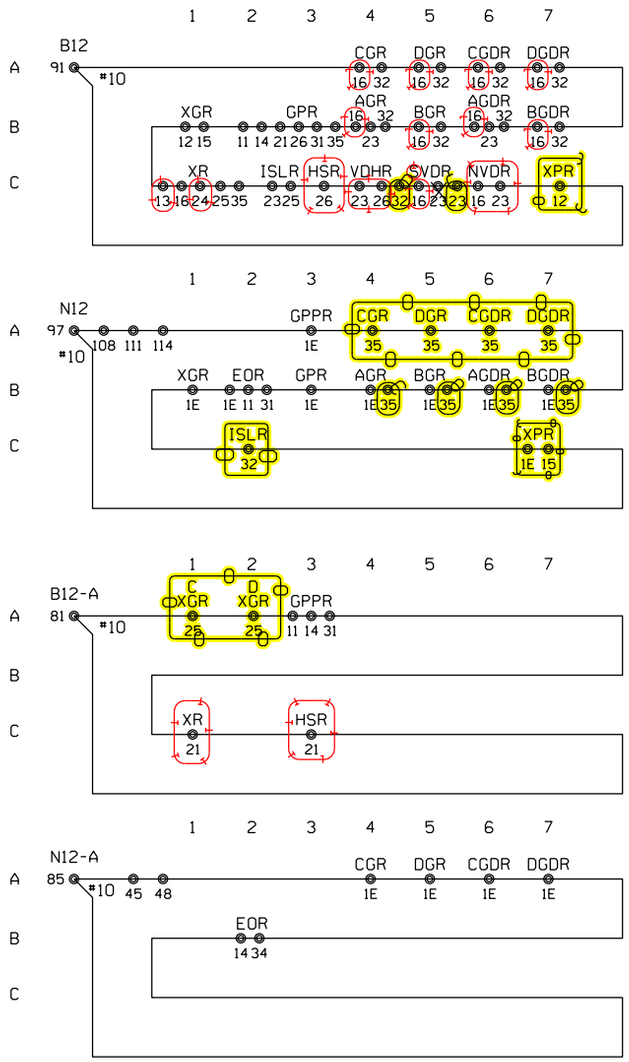

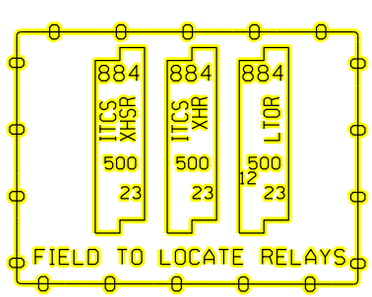

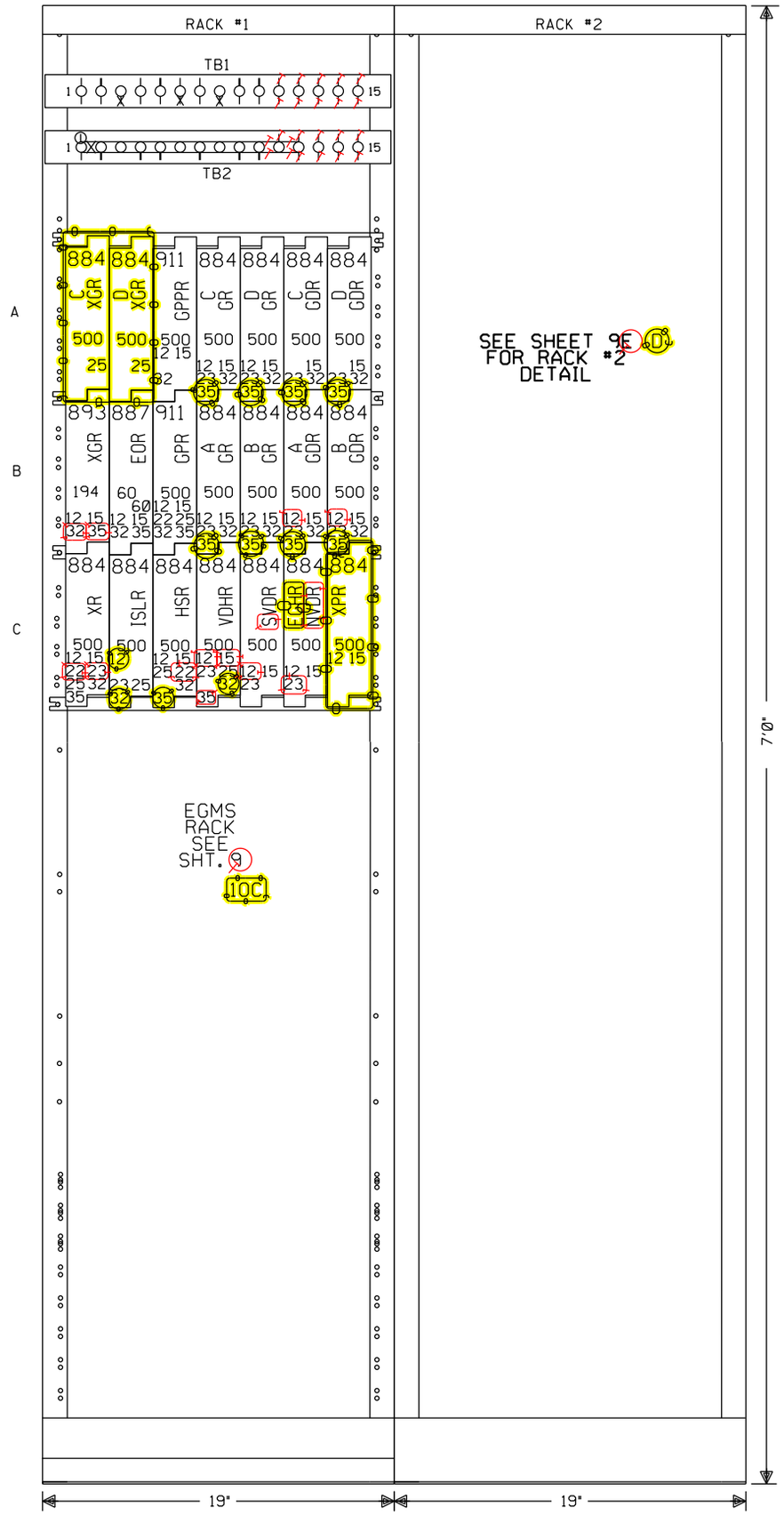

= IN

= OUT

= EXISTING/REVISE ORIGINALS IF A.C.'D

SHERMAN, ILLINOIS
TR 33 (WOLF CREEK RD)
M.P.176.60
SPRINGFIELD SUBDIVISION
D.O.T.#294 280R

= IN

= OUT

Designed: 08/21/12
TIER 3 PHASE 3
M.P.177.00 TO
M.P.160.00
UPGRADE XINGS AND
CP'S FOR HIGH
SPEED RAIL
Rec#: WO#: 22820
IS: /MWK
/NST/MJF

02-24-09
INSTALL MONITOR RACK FOR XINGS
W.O. 87933 MAS

REV. 6-20-08
UPGRADED CROSSING PROTECTION FOR THE HIGH SPEED RAIL PROJ. FROM MAZONIA TO SPRINGFIELD
W.O. # 00183
REC. #15265
4-8-06 JJF
JR/WITT/WITT/JNM

MODIFICATION LEVEL	
Q.A. LAST LEVEL CHK'D.	DA
LAST LEVEL MOD. THIS TYP.	CZ
LAST LEVEL BY DESIGNER.	DD
CHANGED FROM TYP.? Y/N	Y

CIRCUIT MODIFICATIONS ARE NOT TO BE MADE WITHOUT AUTHORITY FROM THE OFFICE OF SIGNAL DESIGN

DES: WITT.IND.
DIG: WITT.IND.
CHK: J.J.F.
A.F.E. 00183
ID= CSL17660.13X
CSL17668.14X

UNION PACIFIC RAILROAD
BLOOMINGTON, ILLINOIS TO
VALLEY JCT., ILLINOIS
C.T.C. CIRCUITS
Office of AVP Engineering-Signal OMAHA NEBR.

DATE 4-1-02
SHEET 13 14
DWG 176.60
RTE-CSL

(REV. 7-9-00) (HOUSE.TYP)

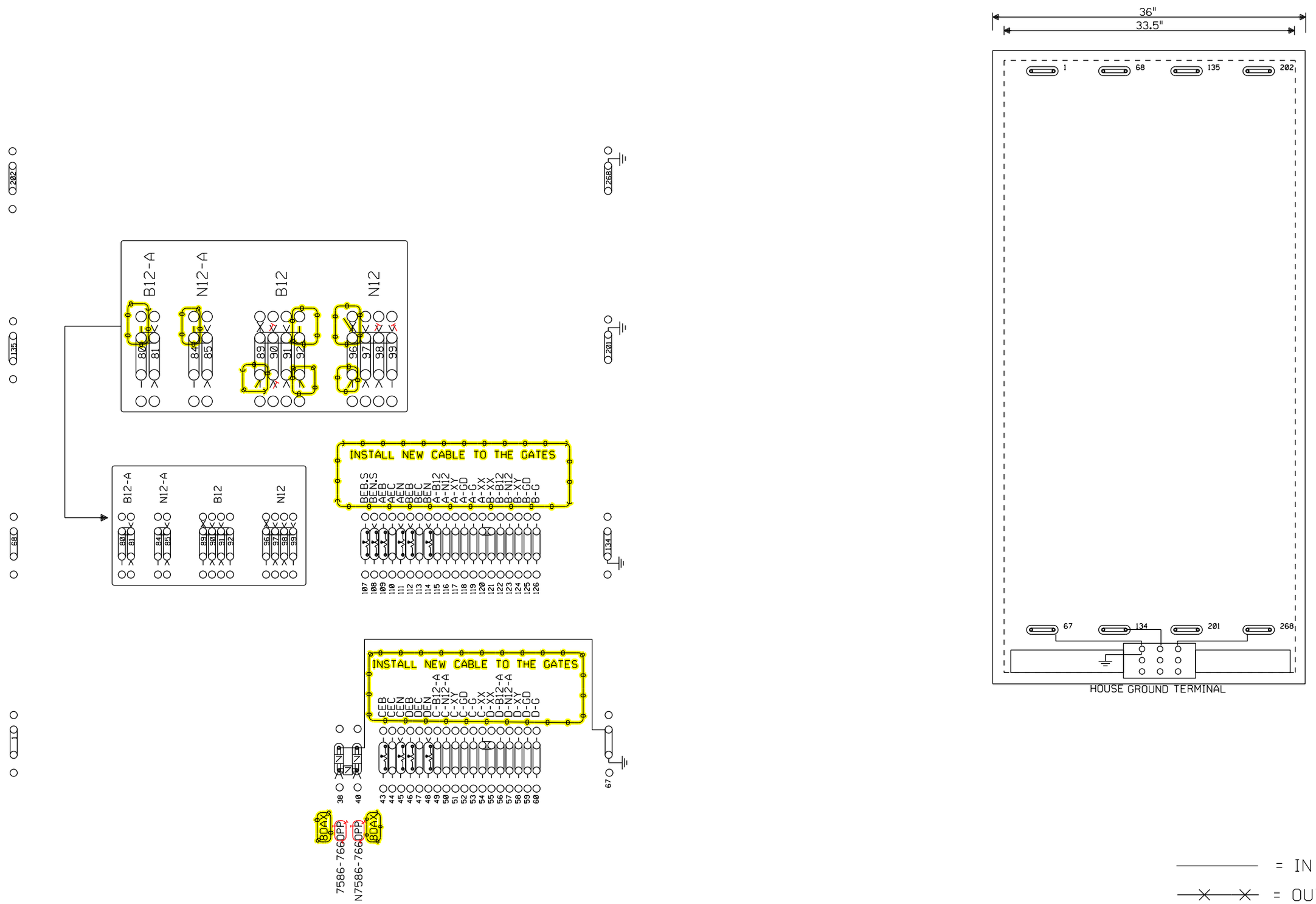

SHERMAN, ILLINOIS
TR 33 (WOLF CREEK RD)
M.P.176.60
SPRINGFIELD SUBDIVISION
D.O.T.#294 280R

= IN
= OUT

Designed: 08/21/12
TIER 3 PHASE 3
M.P.177.00 TO
M.P.160.00
UPGRADE XINGS AND
CP'S FOR HIGH
SPEED RAIL
Rec#: 22820
IS: /MWK
/NST/MJF

02-24-09
INSTALL MONITOR RACK
FOR XINGS
W.O. 87933 MAS

REV. 6-20-08
UPGRADED CROSSING
PROTECTION FOR THE
HIGH SPEED RAIL
PROJ. FROM MAZONIA
TO SPRINGFIELD
W.O. # 00183
REC. #15265
4-8-06 JJF
JR/WITT/WITT/JNM

MODIFICATION LEVEL	
Q.A. LAST LEVEL CHK'D.	DA
LAST LEVEL MOD. THIS TYP.	CZ
LAST LEVEL BY DESIGNER.	DD
CHANGED FROM TYP.? Y/N	Y

CIRCUIT MODIFICATIONS ARE NOT TO BE MADE WITHOUT AUTHORITY FROM THE OFFICE OF SIGNAL DESIGN

DES: WITT.IND.
DIG: WITT.IND.
CHK: J.J.F.
A.F.E. 00183
ID= CSL17660.14X
CSL17668.15X

UNION PACIFIC RAILROAD
BLOOMINGTON, ILLINOIS TO
VALLEY JCT., ILLINOIS
C.T.C. CIRCUITS
Office of AVP Engineering-Signal OMAHA NEBR.

DATE 4-1-02
SHEET 14 15
DWG 176.60
RTE-CSL

(REV. 7-9-00) (HOUSE.TYP)