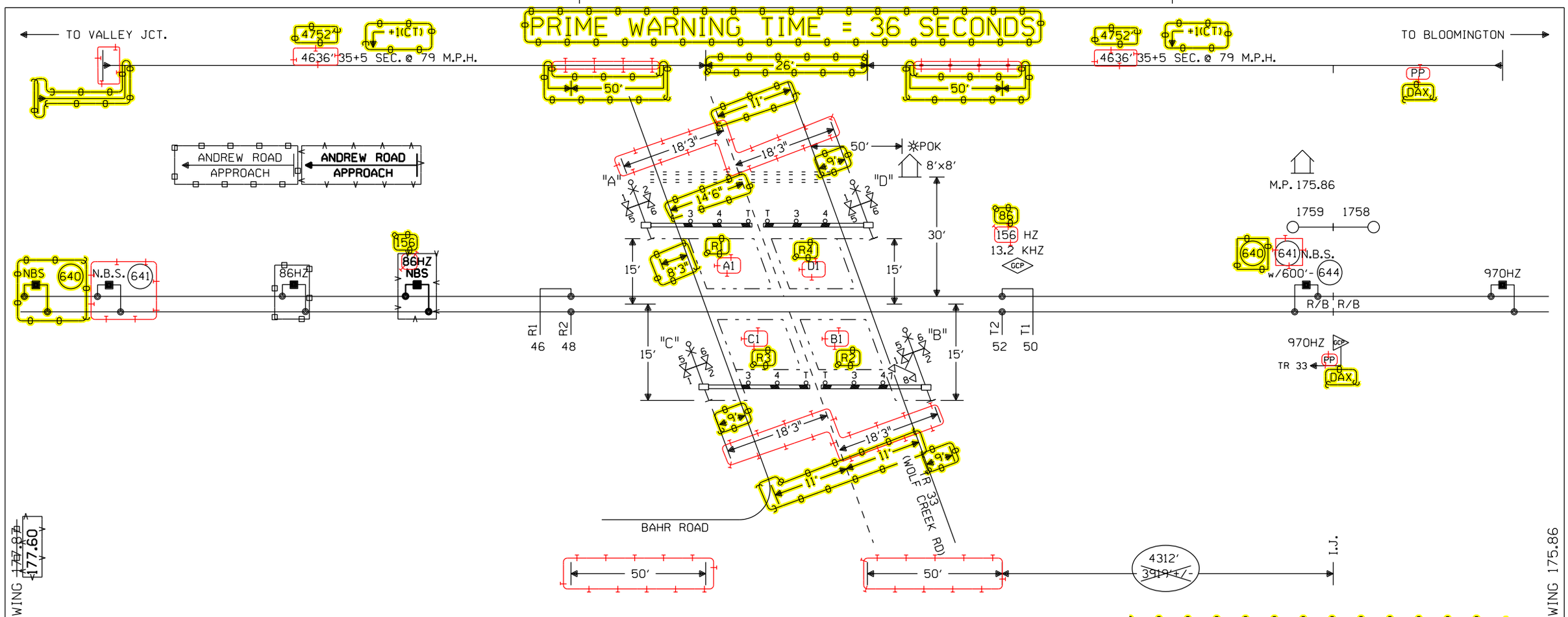

CONSTRUCTION NOTE:

1. RELOCATE EXISTING GATES "B", "C", "D" TO 9' FROM THE EDGE OF ROAD.
2. RELOCATE EXISTING GATE "A" TO 8'3" FROM THE EDGE OF ROAD.
3. ORDER AND INSTALL NEW VEHICLE DETECTION LOOPS.
4. ORDER AND INSTALL NEW CABLE TO THE GATES.

NOTES:

⊗ = TWISTED WIRES INSULATED 1 TWIST PER FT. ALL TRACK WIRES 2C. #6

TRANSMITTER AND RECEIVER LEADS TO BE SEPARATED BY AT LEAST 12" IN TRENCH, LENGTHS SHOULD NOT EXCEED MANUFACTURES RECOMMENDATION.

TOP OF FOUNDATION TO BE AT SAME ELEVATION AS THE SURFACE OF THE TRAVELED WAY & NO MORE THAN 4" ABOVE THE SURFACE OF THE GROUND.

ALL BUNGALOW WIRING TO BE #16 AWG FLEX UNLESS OTHERWISE SPECIFIED EXCEPT ALL GROUND WIRE TO BE #6 AWG FLEX OR LARGER.

ALL WIRING IN GATE MECHANISM TO BE #10 "AWG FLEX".

REFER TO UP STANDARD DWG FOR BUNGALOW GROUNDING.

DO NOT USE 7 CELLS OF B12 BATTERY UNLESS REQUIRED TO MAINTAIN MINIMUM LAMP VOLTAGE.

ALL LIGHTS TO BE 12" ROUNDELS.

= = = = = = 4" X 50' CONDUIT

LIGHTS: LED LIGHTS

GATE A,C: 20'
GATE B,D: 20'

CRTU CELLEMETRY

GATE A: 25'
GATE B, C, D: 21'

EXIT GATE MANAGEMENT SYSTEM (EGMS) LOOP LOCATION:

1.) 12" FROM CONCRETE CROSSING PANEL. MAY VARY FROM 6" TO 12" DEPENDING ON PAVEMENT QUALITY.

2.) 2' FROM CROSSING CENTERLINE.

3.) 3.5' FROM GATE ARM.

4.) 2' FROM THE EDGE OF THE TRAVELED WAY. MAY BE INCREASED UP TO A MAXIMUM OF 5' WHERE AN IMPROVED SHOULDER OR OTHER EXISTS.

5.) MAXIMUM LOOP WIDTH NOT TO EXCEED 8' AND MINIMUM WIDTH NOT TO BE LESS THAN 3'.

— - - = EGMS LOOP

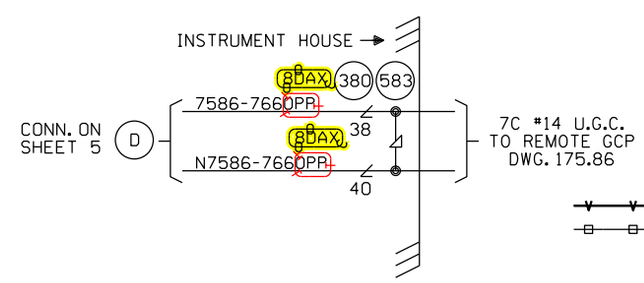

= IN
= OUT

= IN
= OUT

= EXISTING/REVISE ORIGINALS IF A.C.'D

SHERMAN, ILLINOIS
TR 33 (WOLF CREEK RD)
M.P. 176.60
SPRINGFIELD SUBDIVISION
D.O.T.#294 280R

S ← → N

** MAKE TITLE BLOCK CHANGES TO ALL SHEETS **

Date: 04/01/02	UNION PACIFIC RAILROAD	Sh.: 1	
Des: WIT	SHERMAN, ILLINOIS	DOT 294280R	
Chk: JJF	TR33 (WOLF CREEK ROAD)	MP: 176.68	
AFE: 00183	SPRINGFIELD SUBDIVISION	ID: CSL17668.1x	
DES: WITT.IND.	Office of Sr AVP Engineering - Signal Omaha, Nebraska	DATE 4-9-02	
DIG: WITT.IND.	UNION PACIFIC RAILROAD	SHEET 1	
CHK: J.J.F.	BLOOMINGTON, ILLINOIS TO VALLEY JCT., ILLINOIS	DWG 176.60	
A.F.E. 00183	C.T.C. CIRCUITS	RTE-CSL	
ID= CSL17660.1X	Office of AVP Engineering-Signal OMAHA NEBR.		

Designed: 08/21/12 TIER 3 PHASE 3 M.P.177.00 TO M.P.160.00 UPGRADE XINGS AND CP'S FOR HIGH SPEED RAIL WO#: 22820 /MWK Rec#: IS: /NST/MJF

Designed: 6/01/12 TIER 3 PHASE 2 M.P.194.00 TO M.P.177.00 UPGRADE XINGS TO 4 QUAD WITH EGMS. VARIOUS CP'S WO#: 14052 Rec#: IS: /NST/MJF

REV. 6-20-08 UPGRADED CROSSING PROTECTION FOR THE HIGH SPEED RAIL PROJ. FROM MAZONIA TO SPRINGFIELD W.O.# 00183 REC. #15265 4-8-06 JJF JR/WITT/WITT/JNM

MODIFICATION LEVEL	
Q.A. LAST LEVEL CHK'D.	DA
LAST LEVEL MOD. THIS TYP.	CZ
LAST LEVEL BY DESIGNER.	DD
CHANGED FROM TYP.? Y/N	Y

CIRCUIT MODIFICATIONS ARE NOT TO BE MADE WITHOUT AUTHORITY FROM THE OFFICE OF SIGNAL DESIGN

(REV. 7-9-00) (1TKBG.1)

The Incremental Train Control System (ITCS) provides advance activation of the crossings for all ITCS equipped trains travleing over 20 M.P.H. The ITCS is a communication-based train control system that provides enforcement and advanced start of public crossings. ITCS vitally monitors the existing crossings as a basis for determining permissible action and uses a radio frequency (RF) data link with a vital communication protocol to send wayside status to the trains. Enforcement of speed limits is performed vitally by an onboard computer (OBC). The wayside components monitor Crossing Warning Systems and relay the information to the train over the RF network as a list of device statuses. The OBC interprets the statuses and enforces all speed limits and braking based upon those statuses. The OBC must receive an acknowledgment from the crossing, verifying the proper operation of the Crossing Warning System, before the train can proceed at high speed through the crossings aprroach circuit. This is the High Speed OK (HSOK) status. If this status is not true, a 79 M.P.H. target speed limit is placed at the start of the conventional track circuit based approach of the crossing.
Conditions that would cause this to happen are:

- The Advance Start Enable test switch is open.
- The Crossing has been activated longer than 2 minutes but less than 5 minutes.
- The loss of communitations longer than 2 minutes 30 seconds.

The most restrictive status in the health status. If the health status for the crossing is not true a 15 M.P.H. target speed limit is placed at the leading island wires of the crossing.
Conditions that would cause this to happen are:

- Activation failure detected. (A vertical gate not indicating de-energized within 10 seconds of request for crossing to activate)

  If this failure has occurred it requires the advance start enable test switch to be opened to reset the box before any further High Speed operation is allowed.
- The crossing has been activated longer than 5 minuts.
- The vehicle detector does not indicate clear, or the Gate Down circuit not energized within 20 seconds (Field adjustable) of crossing being requested to activate.
- The vehicle detector health not true. This input consists of the detector loop health, EGMS health, Battery health, and Long Term Occupancy of Vehicle Detector Loop (Greater than 1 minute.)

NEW SHEET

							Designed: 08/21/12 TIER 3 PHASE 3 M.P.177.00 TO M.P.160.00 UPGRADE XINGS AND CP'S FOR HIGH SPEED RAIL Rec#: WO#: 22820 IS: /MWK / /NST/MJF	CIRCUIT MODIFICATIONS ARE NOT TO BE MADE WITHOUT AUTHORITY FROM THE OFFICE OF SIGNAL DESIGN	Date: 08/21/12 Des: NST Chk: MWK AFE: 22820	UNION PACIFIC RAILROAD SHERMAN, ILLINOIS TR33 (WOLF CREEK ROAD) SPRINGFIELD SUBDIVISION Office of Sr AVP Engineering - Signal Omaha, Nebraska	Sh.: 1A DOT 294280R MP: 176.68 ID: CSL17668.1AX

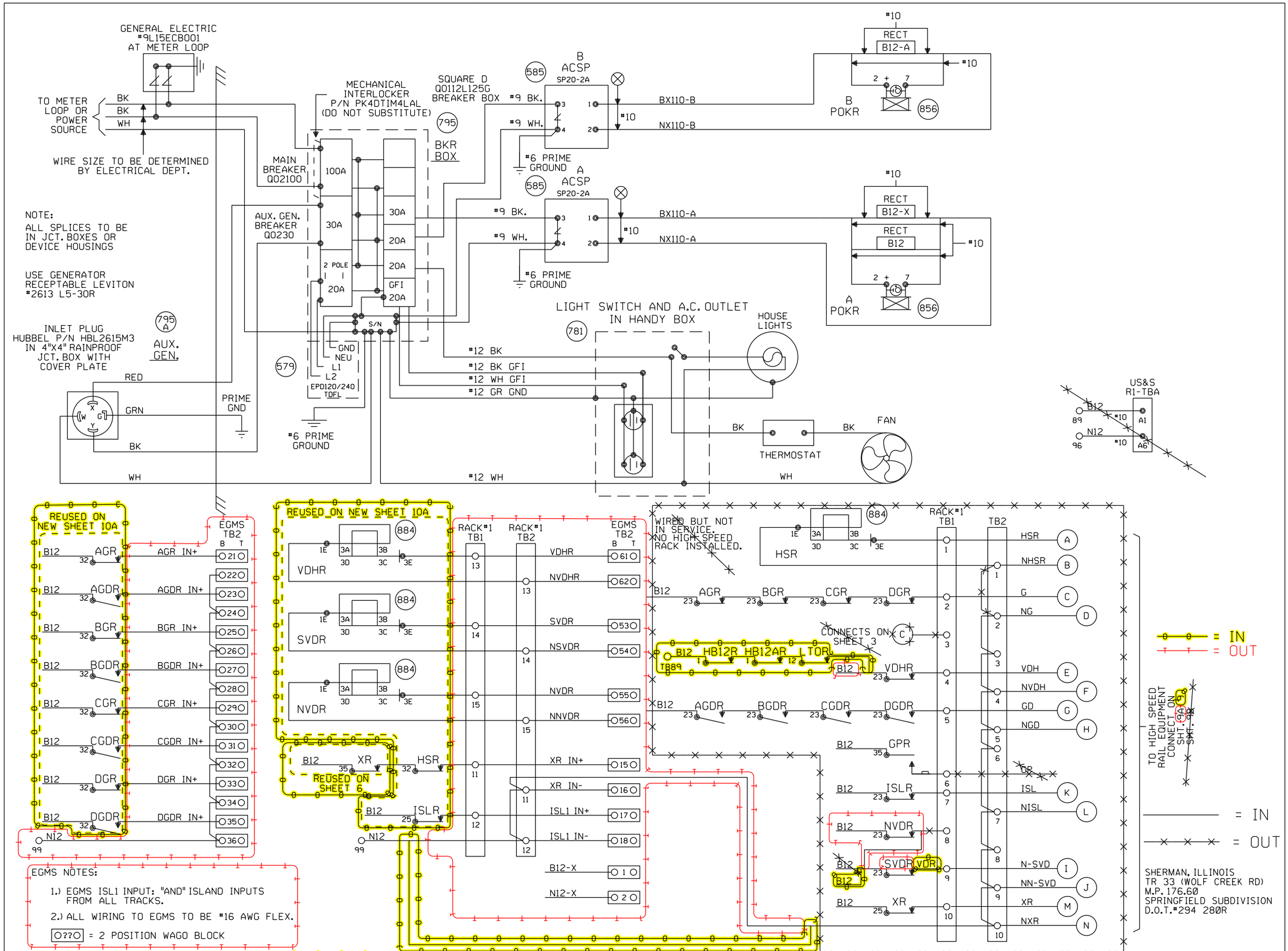

Designed: 08/21/12
TIER 3 PHASE 3
M.P.177.00 TO M.P.160.00
UPGRADE XINGS AND CP'S FOR HIGH SPEED RAIL
Rec#: IS: WO#: 22820 /MWK /NST/MJF

02-24-09
INSTALL MONITOR RACK FOR XINGS
W.O. 87933 MAS

REV. 6-20-08
UPGRADED CROSSING PROTECTION FOR THE HIGH SPEED RAIL PROJ. FROM MAZONIA TO SPRINGFIELD
W.O. # 00183
REC. #15265
3-14-06 JJF
GNT/WITT/WITT/JNM

MODIFICATION LEVEL	
Q.A. LAST LEVEL CHK'D.	DA
LAST LEVEL MOD. THIS TYP.	CZ
LAST LEVEL BY DESIGNER.	DD
CHANGED FROM TYP.? Y/N	Y

CIRCUIT MODIFICATIONS ARE NOT TO BE MADE WITHOUT AUTHORITY FROM THE OFFICE OF SIGNAL DESIGN

DES: WITT.IND.
DIG: WITT.IND.
CHK: J.J.F.
A.F.E. 00183
ID= CSL17660.2X

UNION PACIFIC RAILROAD
BLOOMINGTON, ILLINOIS TO VALLEY JCT., ILLINOIS
C.T.C. CIRCUITS
Office of AVP Engineering-Signal OMAHA NEBR.

DATE 4-1-02
SHEET 2
DWG 176.60
RTE-CSL

(REV. 7-9-00) (HCA4G.2)

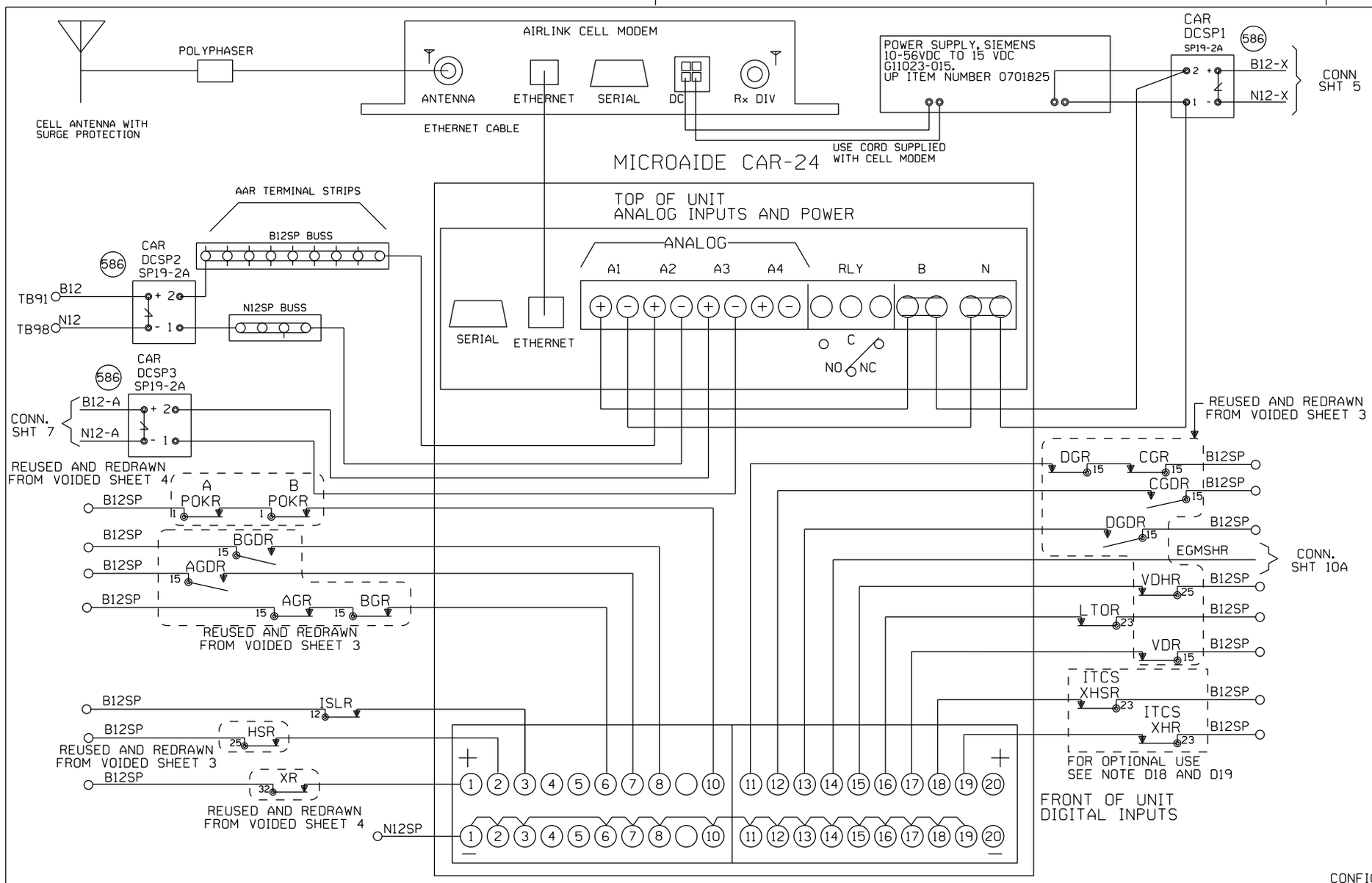

NOTE:
1) DO NOT JUMPER UNUSED INPUTS UNLESS OTHERWISE NOTED
2) THE CAR24 SERIAL PORT IS AVAILABLE TO ADD REMOTE CONNECTIVITY TO EXISTING LOGGING EQUIPMENT. USE NULL MODEM CABLE WITH SHIELDING DISCONNECTED AT ONE OR BOTH SIDES.

ANALOG INPUTS:
A1) B12X BATTERY BANK
A2) B12 BATTERY BANK
A3) B12-A BATTERY BANK
A4) BATTERY BANK 4

DIGITAL INPUTS
D1) XR
D2) HSR
D3) ISLAND 1
D4) ISLAND 2
D5) ISLAND 3
D6) GATE UP INDICATION
D7) GATE DOWN INDICATION 1
D8) GATE DOWN INDICATION 2
D9)
D10) POR
D11) Exit Gate Up Indication
D12) Exit Gate Down Indication 1
D13) Exit Gate Down Indication 2
D14) EGMSHR - EGMS Overall System Health Output
D15) VDHR - EGMS Loop Health Output
D16) LTOR - EGMS Long-Term Obstacle
D17) VDR - EGMS Vehicle Detect Relay
D18) ITCS High Speed Start Health - XHSR.
Jumper to B12SP if unused.
D19) ITCS Health - XHR.
Jumper to B12SP if unused.
D20)

CONFIG: CAR24HISPEED

Alarm Name	Alarm Code	Clearing Code	Alarm Conditions	Alarm Clearing Conditions	Cleared by Maintainer Mode?
AC Power Off 30 Minutes	IP	PR	POR input low for 30 minutes.	POR input high for 5 minutes.	No
AC Power Off 2 Hours	PK	PR	POR input low for 2 Hours.	POR input high for 5 minutes.	No
Battery Bank #1 Out of Range	B1	1B	Battery 1 below 11V or over 19V for 10 seconds.	Battery 1 between 11V and 19V for 5 minutes	No
Battery Bank #2 Out of Range	B2	2B	Battery 2 below 11V or over 19V for 10 seconds.	Battery 2 between 11V and 19V for 5 minutes	No
Battery Bank #3 Out of Range	B3	3B	Battery 3 below 11V or over 19V for 10 seconds.	Battery 3 between 11V and 19V for 5 minutes	No
Battery Bank #4 Out of Range	B4	4B	Battery 4 below 11V or over 19V for 10 seconds.	Battery 4 between 11V and 19V for 5 minutes	No
Xing Activation over 5 Min - High Speed	LH	CL	XR or HSR input low for 5 minutes.	XR and HSR input high for 10 seconds.	Yes
Gate Not Up Properly	GU	GC	Gate Up indication is low and XR high for 3 minutes.	Gate Up indication high and XR high for 2 seconds.	Yes
Gate Not Down Properly	GD	GC	Gate Down indication(s) low and XR is low for 45 seconds.	Gate Down indication(s) is high and XR low for 2 seconds.	Yes
EGMS Vehicle Detector Health Alarm	EL	LE	VDHR input low for 10 seconds	VDHR input is high for 5 seconds	No
EGMS Long Term Obstruction Alarm	ET	TE	LTOR input low for 1 minute	LTOR input is high for 5 seconds	No
ITCS Health Alarm	IH	HI	ITCSXHR or ITCSXHSR low for 1 minute.	ITCSXHR and ITCSXHSR high for 5 seconds.	No

NEW SHEET

Designed: 08/21/12
TIER 3 PHASE 3
M.P.177.00 TO
M.P.160.00
UPGRADE XINGS AND
CP'S FOR HIGH
SPEED RAIL
Rec#: WO#: 22820
IS: / /MWK
/NST/MJF

MODIFICATION LEVEL	
O. A. LAST LEVEL CHECKED	DU
LAST LEVEL MOD THIS TYPICAL	DU
LAST LEVEL BY DESIGNER	DU
CHANGED FROM TYPICAL?	Y

REV 01.24.11 4K ACDCCAR24.3

CIRCUIT MODIFICATIONS ARE NOT TO BE MADE WITHOUT AUTHORITY FROM THE OFFICE OF SIGNAL DESIGN

Date: 08/21/12
Des: NST
Chk: MWK
AFE: 22820

UNION PACIFIC RAILROAD
SHERMAN, ILLINOIS
TR33 (WOLF CREEK ROAD)
SPRINGFIELD SUBDIVISION
Office of AVP Engineering - Signal Omaha, Nebraska

Sh.: 3
DOT 294280R
MP: 176.68
ID: CSL17668.3X

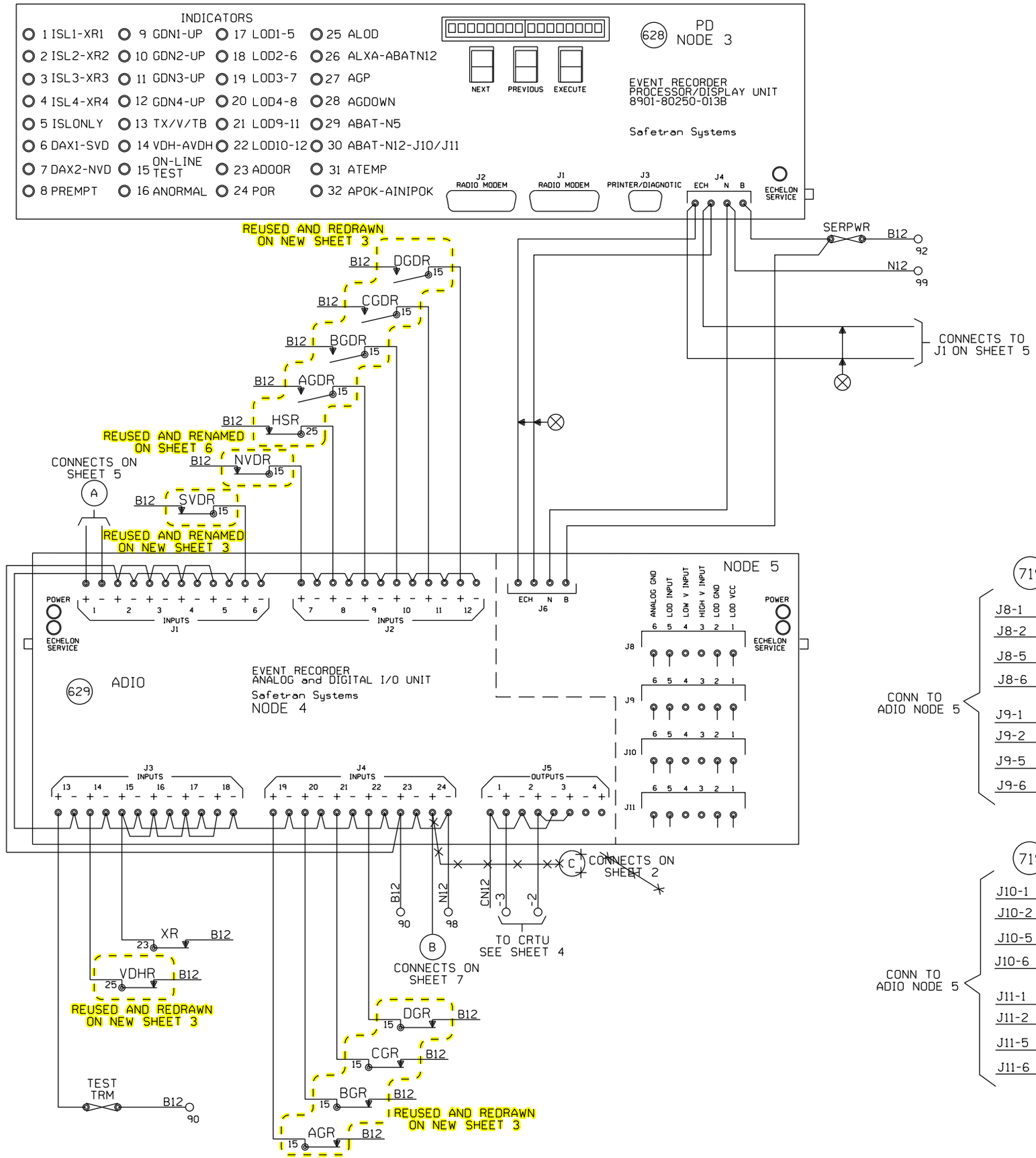

NODE #4
DIGITAL INPUTS:
1.ISL1
2.ISL2
3.ISL3
4.ISL4
5.ISONLY
6.DAX1-SVD
7.DAX2-NVD
8.PREMPT
9.GDWN1
10.GDWN2
11.GDWN3
12.GDWN4
13.TX/V/TB
14.VDH
15.XR1
16.XR2
17.XR3
18.XR4
19.GP1
20.GP2
21.GP3
22.GP4
23.POK/DO
24.POR

NODE #4
DIGITAL OUTPUTS:
J5-1 ALRM1
J5-2 ALRM2
J5-3 HEALTH
J5-4 DOORBUZ

NODE #5
ANALOG INPUTS:
J8-LOD1
J9-LOD2
J10-LOD3
J11-LOD4
NB-BATT5

GCP NODES:
6 GCP NORMAL
16 GCP STANDBY

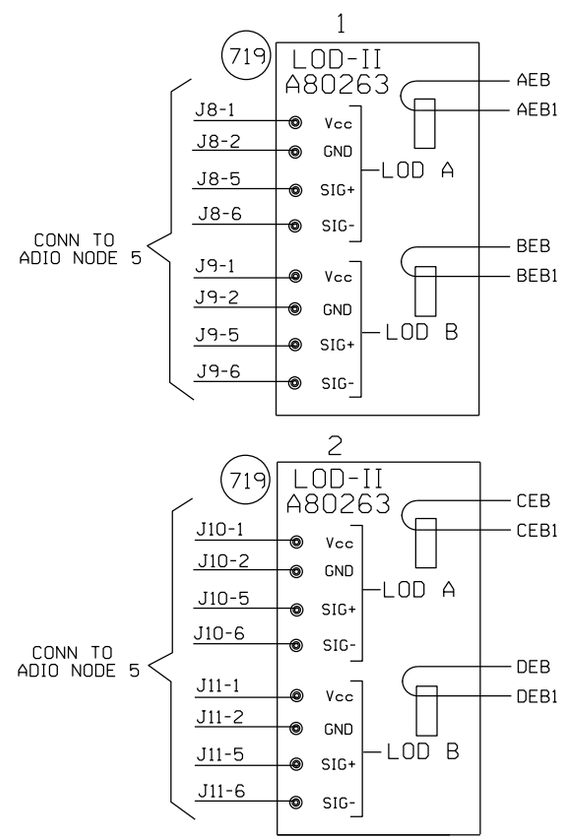

SER NOTES:
1. JUMPER ALL UNUSED DIGITAL "+" INPUTS TO THE B TERMINAL
2. JUMPER ALL UNUSED DIGITAL "-" INPUTS TO THE N TERMINAL.
3. DO NOT JUMPER INPUTS WITH DIFFERENT VOLTAGE REFERENCES TOGETHER.
4. WHEN L.E.D. #15 IS LIT THE SER IS IN TEST MODE.

⊗ = TWISTED WIRES.

TO BE VOIDED
08/21/12
W.O. 22820 NST/MJF

——— = IN
—×—×—×— = OUT

SHERMAN, ILLINOIS
TR 33 (WOLF CREEK RD)
M.P. 176.60
SPRINGFIELD SUBDIVISION
D.O.T.#294 280R

02-24-09 INSTALL MONITOR RACK FOR XINGS W.O. 87933 MAS	REV. 6-20-08 UPGRADED CROSSING PROTECTION FOR THE HIGH SPEED RAIL PROJ. FROM MAZONIA TO SPRINGFIELD W.O. # 00183 REC. #15265 4-8-06 JJF JR/WITT/WITT/JNM	MODIFICATION LEVEL	
		Q.A. LAST LEVEL CHK'D.	DA
		LAST LEVEL MOD. THIS TYP.	CZ
		LAST LEVEL BY DESIGNER.	DD
		CHANGED FROM TYP.? Y/N	Y

CIRCUIT MODIFICATIONS ARE NOT TO BE MADE WITHOUT AUTHORITY FROM THE OFFICE OF SIGNAL DESIGN

DES: WITT.IND.
DIG: WITT.IND.
CHK: J.J.F.
A.F.E. 00183
ID= CSL17660.3X

UNION PACIFIC RAILROAD
BLOOMINGTON, ILLINOIS TO VALLEY JCT., ILLINOIS
C.T.C. CIRCUITS
Office of AVP Engineering-Signal OMAHA NEBR.

DATE 4-1-02
SHEET 3
DWG 176.60
RTE-CSL

(REV. 4-4-00) (SER.TYP)

LEFT

775

TOP

VOLTAGE MONITOR 520603-2V150A

RAILWAY EQUIPMENT CO.
MPLS, MN 763-972-2200

PASSWORD		The Password to adjust parameters is 5.
MAX VCH1	SET ---- . ---	High voltage setpoint for channel one.
LOW VCH1	SET ---- . ---	Low voltage setpoint for channel one.
DELAY CH1	SET ---------	Delay time in sec. before a fault is set for ch. one.
MAX VCH2	SET ---- . ---	High voltage setpoint for channel two.
LOW VCH2	SET ---- . ---	Low voltage setpoint for channel Two.
HIGH AMP	SET ---------	High current setpoint for channel two.
LOW AMP	SET ---------	Low current setpoint for channel two.
HIGH TEMP	SET ---------	High temp. setpoint for channel two.
LOW TEMP	SET ---------	Low temp. setpoint for channel two.
DELAY CH2	SET ---------	Delay time in sec. before a fault is set for ch. two.

MENU OPERATION: Depressing the MODE button will move through all screens. Depressing the INCREASE or DECREASE button will increase or decrease the desired value

LCD Display

MODEL 520603-2V150
VOLTAGE MONITOR

RAILWAY EQUIPMENT CO.
MINNEAPOLIS, MN 763-972-2200

INCREASE DECREASE MODE

CURRENT SENSOR

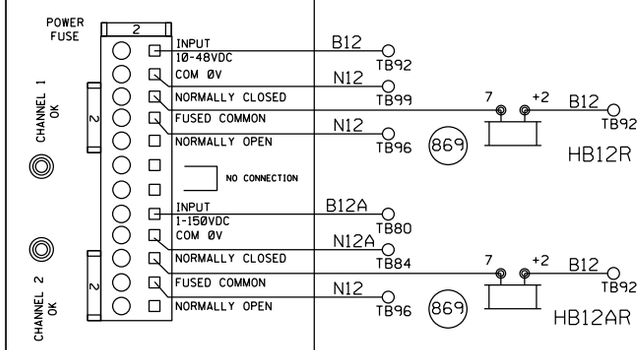

LOW VOLTAGE SETPOINT IS TO BE SET AT 11 VOLTS.

NEW SHEET

Designed: 08/21/12
TIER 3 PHASE 3
M.P.177.00 TO
M.P.160.00
UPGRADE XINGS AND
CP'S FOR HIGH
SPEED RAIL
Rec#: WO#: 22820
IS: /MWK
/ /NST/MJF

MODIFICATION LEVEL	
Q. A. LAST LEVEL CHECKED	DU
LAST LEVEL MOD THIS TYPICAL	DU
LAST LEVEL BY DESIGNER	DU
CHANGED FROM TYPICAL?	Y

REV 01.24.11 4K 2TKEGMS.4

CIRCUIT MODIFICATIONS ARE NOT TO BE MADE WITHOUT AUTHORITY FROM THE OFFICE OF SIGNAL DESIGN

Date: 08/21/12
Des: NST
Chk: MWK
AFE: 22820

UNION PACIFIC RAILROAD
SHERMAN, ILLINOIS
TR33 (WOLF CREEK ROAD)
SPRINGFIELD SUBDIVISION
Office of AVP Engineering - Signal Omaha, Nebraska

Sh.: 4
DOT 294280R
MP: 176.68
ID: CSL17668.4X

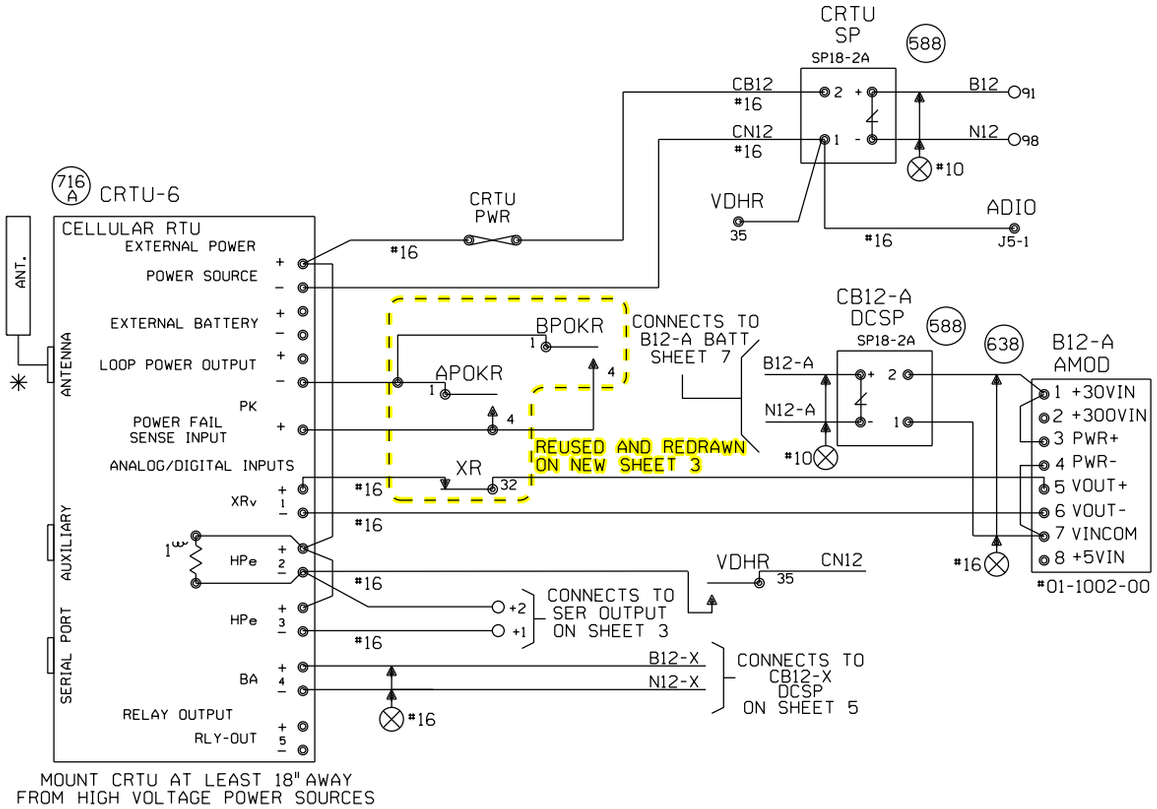

NOTES:

ALL DIODES 1N5060 OR 1N4004 UNLESS OTHERWISE NOTED.
✳ MOUNT ANTENNA ON TOP OF HOUSE.
ALL WIRES #18 UNLESS OTHERWISE NOTED.
ALL UNUSED 'NC' INPUTS MUST BE TIED HIGH TO BATTERY
ALL UNUSED ANALOG INPUTS MUST BE TIED HIGH TO BATTERY
ALL UNUSED 'NO' INPUTS MUST BE DISCONNECTED

CRTU FRONT PANEL DISPLAYCHART INDICATES NORMAL STATE

■ DIGITAL INPUT HIGH, OR POWER FAIL INPUT CLOSED

□ DIGITAL INPUT LOW, OR POWER FAIL INPUT OPEN

NORMAL STATE FOR ANALOG CHANNELS IS EQUAL TO THE STORED NOMINAL VOLTAGE +120% OR -81%

■ L ← LATCH IS SET BECAUSE CRTU DETECTED AN ALARM CONDITION

12.06V L

'sRUN MODE' 'sRUN MODE-SILENT'

CRTU RADIO IS DISABLED. REPROGRAM CRTU WITH LAPTOP.

MEASURE NOMINAL VOLTAGE ON ANALOG INPUT MODULE BETWEEN 1 +30VIN AND 7 VINCOM

ANALOG AND AC INPUT MODULES MUST BE MOUNTED LESS THAN 12" FROM THE CRTU

ANALOG MODULES CONVERT DC VOLTAGE TO A SQUARE WAVE. A WORKING ANALOG MODULE WILL HAVE 4.5VDC TO 8.0VDC BETWEEN 5VOUT+ AND 6VOUT-. WHERE, 0VOLTS = 0HZ OUT, 30VOLTS = 10KHZ OUT, AND 15VOLTS = 5KHZ OUT MAKE SURE CRTU IS PROGRAMMED WITH CALIBRATION SETTINGS.

TO BE VOIDED
08/21/12
W.O. 22820 NST/MJF

UNIT INSTALLATION AND SETUP

R.R. SITE ID WHERE; SSSS = 4 CHARACTER SUBDIVISION ID. FILL WITH PRECEDING ZEROS AS REQUIRED. THE MAIN TRACK SUBDIVISION ID* IS IN THE CURRENT TIMETABLE. INDUSTRIAL LEADS, LEASED, AND LEAD TRACKS LISTED WITHIN THE SUBDIVISION MAY HAVE THEIR OWN UNIQUE SUBDIVISION ID*. ALWAYS REFER TO CURRENT PRINTED COPY OF THE TIMETABLE.
LLLLLLLL = 8 CHARACTERS USE DOT* AT CROSSINGS, AND
WDLLLLLL = USE 'WD' THEN MP* AT WAYSIDE LOCATIONS.
EXAMPLE = 0785WD1801.5UT
HBLLLLLL = USE 'HB' THEN MP* AT HBD SITES.
EXAMPLE = 0100-HB55.62TX
THE MP* MUST USE A DECIMAL POINT TO SEPARATE NUMBERS. FILL WITH PRECEDING DASHES AS REQUIRED.
AA = 2 CHARACTER STATE NAME FOR ALL LOCATIONS. MUST BE 14 CHARACTERS LONG, NO SPACES ALLOWED.

SITE IDENTIFIER: SSSSLLLLLLLLAA	0029-294280RIL
OPERATION TO RESUME: RUN	
SIGNAL STRENGTH dBm	
CARRIER ID	
FIRMWARE VERSION	2.3.
BOOT VERSION:	
CMM VERSION:	
SERIAL NUMBER	
MIN ASSIGNMENT	
ESN: (MICROBURST ONLY)	
CONFIGURATION NET	CELLEMETRY
SILENCE INTERVAL	60 MINUTES
HEALTHCHECK INTERVAL	EVERY 2 DAYS
ALARM DEFER DELAY	240 MINUTES (4 HOURS)
SIGNAL STATUS	
SCADANET STATUS	
CALIBRATION CONSTANT CH1	
CALIBRATION CONSTANT CH2	
CALIBRATION CONSTANT CH3	
CALIBRATION CONSTANT CH4	
CALIBRATION CONSTANT PS	

FIELD PROVIDES: SAMPLED NOMINAL VOLTAGES, SCADANET STATUS CALIBRATION CONSTANTS, SERIAL NUMBER, AND SIGNAL STATUS.

CHANNEL SETUP - STANDARD CONFIGURATION 3:XRv,HPe,HPe,Ba

CHANNEL NORMAL STATE	SENSE (NO/NC)	NAME FUNCTION	RECOGNITION DELAY SECONDS ACTIVE	RECOGNITION DELAY SECONDS NORMAL	RETURN TO NORMAL	REPORTING MODE	ALARM LINKED CHANNEL	ALARM LINKED CRITERIA	EVENT LOGGING ENABLED OPTIONS
POWER FAIL (CH5) ■	POWER FAIL DETECT NO	PF1n-PK AC POWER FAIL	7,200 ALARM	300 NORMAL	ENABLED	ALERT	DISABLED	N/A	
CH1 STORED NOMINAL VOLTAGE	ANALOG INPUT N/A	CH1-XR/V XR DOWN TO LONG BATTERY LOW	1800 ALARM	1200 NORMAL	ENABLED	ALERT W/UPDATE	DISABLED	N/A	ANALOG VALUE SENT
CH2 □	DIGITAL INPUT NO	CH2-HPe LIGHT OUT GATE NOT UP/DOWN	120 ALARM	10 NORMAL	ENABLED	ALERT	DISABLED	N/A	
CH3 ■	DIGITAL INPUT NO	CH3-HPe VEHICLE DETECTOR HEALTH FAILURE	120 ALARM	10 NORMAL	ENABLED	ALERT	DISABLED	N/A	DIGITAL EVENTS
CH4 STORED NOMINAL VOLTAGE	ANALOG INPUT N/A	CH4-Ba/V BATTERY MONITOR BATTERY LOW	600 ALARM	1200 NORMAL	ENABLED	ALERT W/UPDATE	DISABLED	N/A	PF1n-PK CH2-HPe CH3-HPe
POWER SOURCE (CH6)	ANALOG INPUT N/A	PS-Ba/V BATTERY MONITOR BATTERY LOW	600 ALARM	1200 NORMAL	ENABLED	ALERT W/UPDATE	DISABLED	N/A	

ANALOG CHANNEL	USEFUL RANGE VOLTS LOW	USEFUL RANGE VOLTS HIGH	DISPLAYED RANGE VOLTS LOW	DISPLAYED RANGE VOLTS HIGH	RELATIVE ALARM POINT LOW	RELATIVE ALARM POINT HIGH	ABSOLUTE ALARM POINT LOW	ABSOLUTE ALARM POINT HIGH	AUTOMATIC UPDATE INTERVAL	STORED NOMINAL VOLTAGE	SAMPLED NOMINAL VOLTAGE
CH1	0.0	30.00	0.0	30.00	81%	120%	10.0	29.0	14 DAYS	12.69	
CH2											
CH3											
CH4	0.0	30.00	0.0	30.00	81%	120%	10.0	29.0	14 DAYS	12.69	
POWER SOURCE	0.0	30.00	0.0	30.00	81%	120%	10.0	29.0	14 DAYS	12.69	

RELAY OUTPUT	NAME	ACTIVE	NORMAL	PULSE DURATION		
	RLY-OUT	SET-UP-OPEN	CLR-DN-CLOSE		15 SECONDS	StdCfg Ver: 2.3.3 REV'D 9-20-02

MAINTENANCE OPERATIONS

TO START OR ABORT ANY PROCEDURE

1. PRESS THE 'CANCEL' BUTTON FIRST

WHEN RESPONDING TO A CALL, PUT THE CRTU IN THE 'SILENCE ALARMS' MODE

1. PRESS 'SELECT' AND THEN '+ ARROW' BUTTON UNTIL
   DISPLAY: ACTION?
   SILENCE ALARMS
2. PRESS THE 'SELECT' BUTTON TWICE
3. CORRECT PROBLEM AND SIMULATE NORMAL TRAIN MOVEMENT THROUGH THE LOCATION
4. EXAMINE EACH CHANNEL ON THE CRTU
5. PRESS THE '+/- ARROW' BUTTON
   VERIFY ALL CHANNELS INDICATE A NORMAL STATE
NORMAL STATES ARE ON THE CHANNEL SETUP CHART

CLEAR TIMERS, LATCHES AND SEND ALL NORMAL

1. DO STEPS #1 - #5 ABOVE, AND PRESS 'CANCEL'.
2. PRESS 'SELECT' AND THEN '- ARROW' BUTTON UNTIL
   DISPLAY: ACTION?
   SERVICE MODE
3. PRESS 'SELECT' AGAIN TO RESET TIMERS, AND IF
   DISPLAY: SERVICE MODE
   ALL NORMAL
4. PRESS 'SELECT' AGAIN TO CLEAR LATCHES, AND SEND ALL NORMAL. SKIP STEPS #5-#6.
5. HOWEVER, IF ALARMS ARE NOT CLEARED;
   DISPLAY: SERVICE MODE
   ALARMS PENDING/PRESENT
6. PRESS 'CANCEL', CORRECT PROBLEM AND REPEAT STEPS #2 THRU #5 UNTIL ALL NORMAL SENT.

TO CANCEL THE 'SILENCE ALARMS' MODE

1. PRESS 'SELECT' AND THEN '+ ARROW' BUTTON UNTIL
   DISPLAY: ACTION?
   CANCEL SILENCE
2. PRESS THE 'SELECT' BUTTON AGAIN

EXAMINE & SET BATTERY VOLTAGE NOMINAL VALUE

1. PRESS THE '+ ARROW' OR '- ARROW' BUTTON UNTIL THE DESIRED CHANNEL IS DISPLAYED.
   DISPLAY: PS-BA:
   13.83V NORMAL
2. VERIFY THE DISPLAYED READING WITH A DIGITAL VOLTMETER
3. PRESS THE 'SELECT' BUTTON, AND THE CRTU DISPLAY WILL SWITCH BETWEEN CURRENT/SAVED NOMINAL VOLTAGE VALUES.
   DISPLAY: NOMINAL ON #6? (CURRENT)
   13.83
   DISPLAY: SAVED NOMINAL 6 (STORED)
   12.69
4. PRESS THE 'SELECT' BUTTON AND THE CURRENT OR 'NOMINAL ON' VALUE WILL BE SAMPLED AND STORED AS THE 'SAVED NOMINAL' VALUE
5. VERIFY THE 'NOMINAL ON' AND 'SAVED NOMINAL' VALUES ARE EQUIVALENT, REPEAT STEPS #1 THRU #3 & PRESS THE 'CANCEL' BUTTON.

SHERMAN, ILLINOIS
TR 33 (WOLF CREEK RD)
M.P. 176.60
SPRINGFIELD SUBDIVISION
D.O.T.#294 280R

REV. 6-20-08
UPGRADED CROSSING PROTECTION FOR THE HIGH SPEED RAIL PROJ. FROM MAZONIA TO SPRINGFIELD
W.O. # 00183
REC. #15265
4-8-06 JJF
JR/WITT/WITT/JNM

MODIFICATION LEVEL	
Q.A. LAST LEVEL CHK'D.	DA
LAST LEVEL MOD. THIS TYP.	CZ
LAST LEVEL BY DESIGNER.	DD
CHANGED FROM TYP.? Y/N	Y

CIRCUIT MODIFICATIONS ARE NOT TO BE MADE WITHOUT AUTHORITY FROM THE OFFICE OF SIGNAL DESIGN

DES: WITT.IND.
DIG: WITT.IND.
CHK: J.J.F.
A.F.E. 00183
ID= CSL17660.4X

UNION PACIFIC RAILROAD
BLOOMINGTON, ILLINOIS TO VALLEY JCT., ILLINOIS
C.T.C. CIRCUITS
Office of AVP Engineering-Signal OMAHA NEBR.

DATE 4-1-02
SHEET 4
DWG 176.60
RTE-CSL

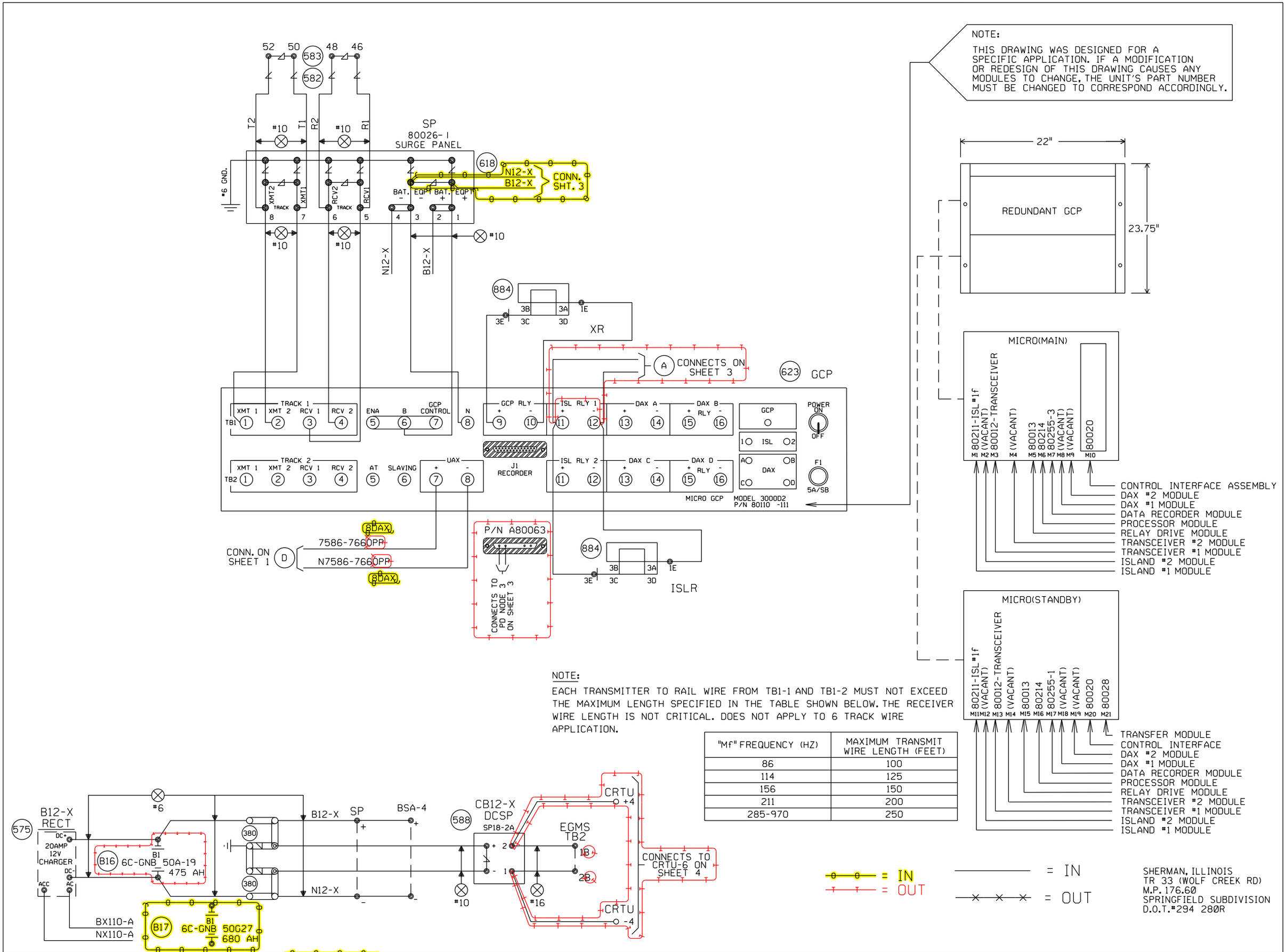

"Mf" FREQUENCY (HZ)	MAXIMUM TRANSMIT WIRE LENGTH (FEET)
86	100
114	125
156	150
211	200
285-970	250

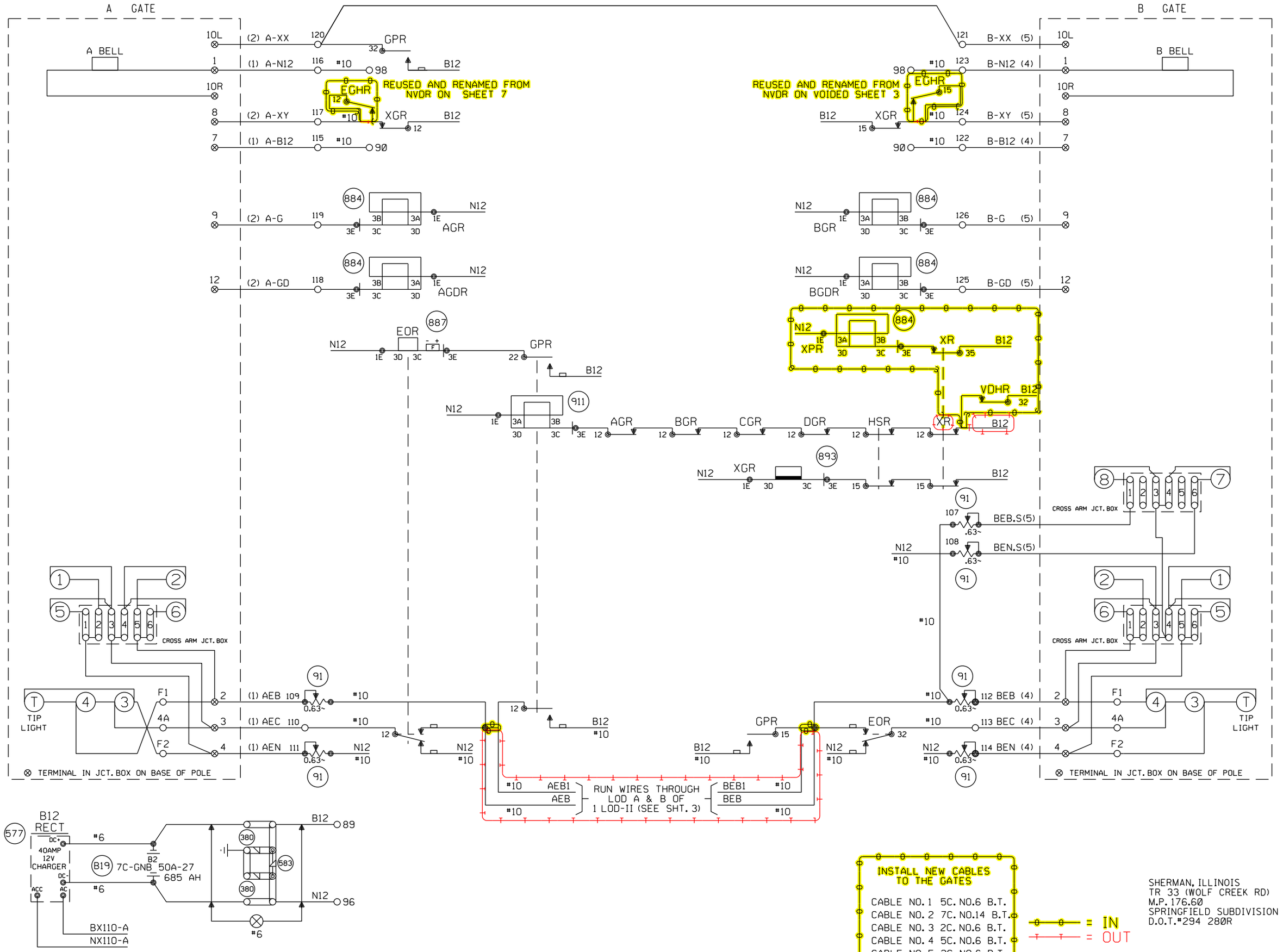

Designed: 08/21/12
TIER 3 PHASE 3
M.P.177.00 TO M.P.160.00
UPGRADE XINGS AND CP'S FOR HIGH SPEED RAIL
Rec#: WO#: 22820
IS: /MWK /NST/MJF

REV. 6-20-08
UPGRADED CROSSING PROTECTION FOR THE HIGH SPEED RAIL PROJ. FROM MAZONIA TO SPRINGFIELD
W.O. # 00183
REC. #15265
4-8-06 JJF
JR/WITT/WITT/JNM

MODIFICATION LEVEL	
Q.A. LAST LEVEL CHK'D.	DA
LAST LEVEL MOD. THIS TYP.	CZ
LAST LEVEL BY DESIGNER.	DD
CHANGED FROM TYP.? Y/N	Y

CIRCUIT MODIFICATIONS ARE NOT TO BE MADE WITHOUT AUTHORITY FROM THE OFFICE OF SIGNAL DESIGN

DES: WITT.IND.
DIG: WITT.IND.
CHK: J.J.F.
A.F.E. 00183
ID= CSL17660.6X

UNION PACIFIC RAILROAD BLOOMINGTON, ILLINOIS TO VALLEY JCT., ILLINOIS C.T.C. CIRCUITS

Office of AVP Engineering-Signal OMAHA NEBR.

DATE 4-1-02
SHEET 6
DWG 176.60
RTE-CSL

(REV. 7-9-00) (4GTYP.5)

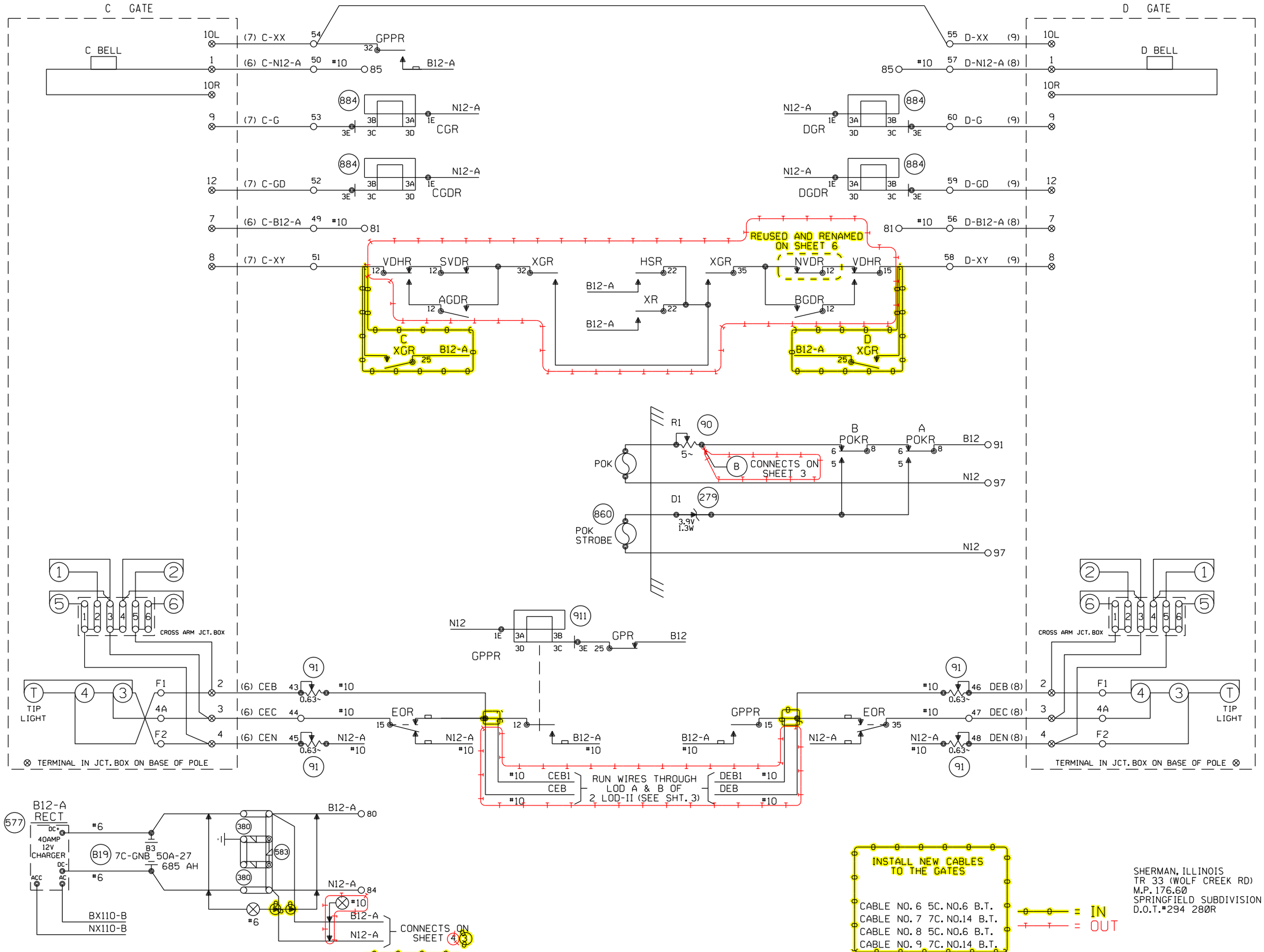

(REV. 7-9-00) (4GTYP.6)

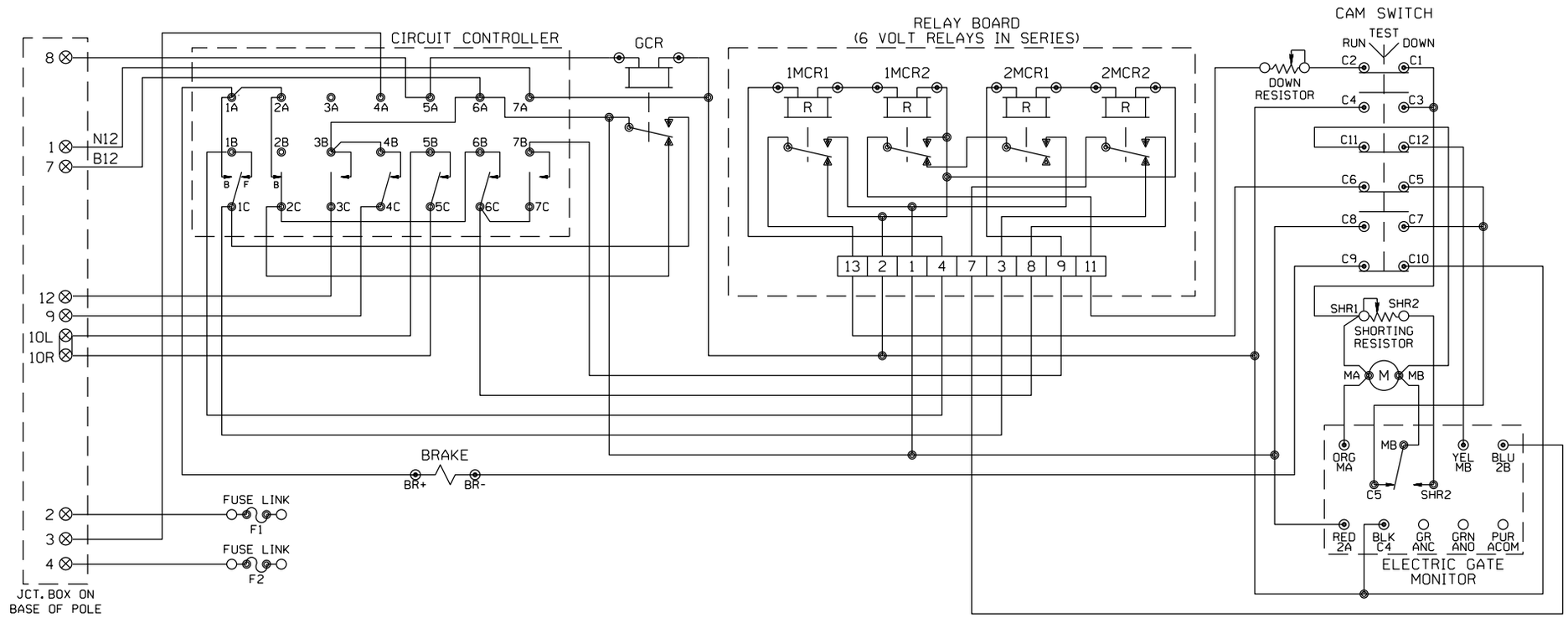

FOR WIRING GATES "C" AND "D"

WCH 3597 EXIT GATE

CONTACT	CLOSED	FUNCTION
1F	90-2	POWER DOWN
1B	2-0	ENGAGE BRAKE DOWN
2B	86-90	ENGAGE BRAKE UP
3	0-10	GATE DOWN
4	82-90	GATE CLEAR
5	10-90	BELL
6	60-90	POWER UP
7	0-75	DROP POWER UP

MECHANISM SHOWN IN CLEAR POSITION

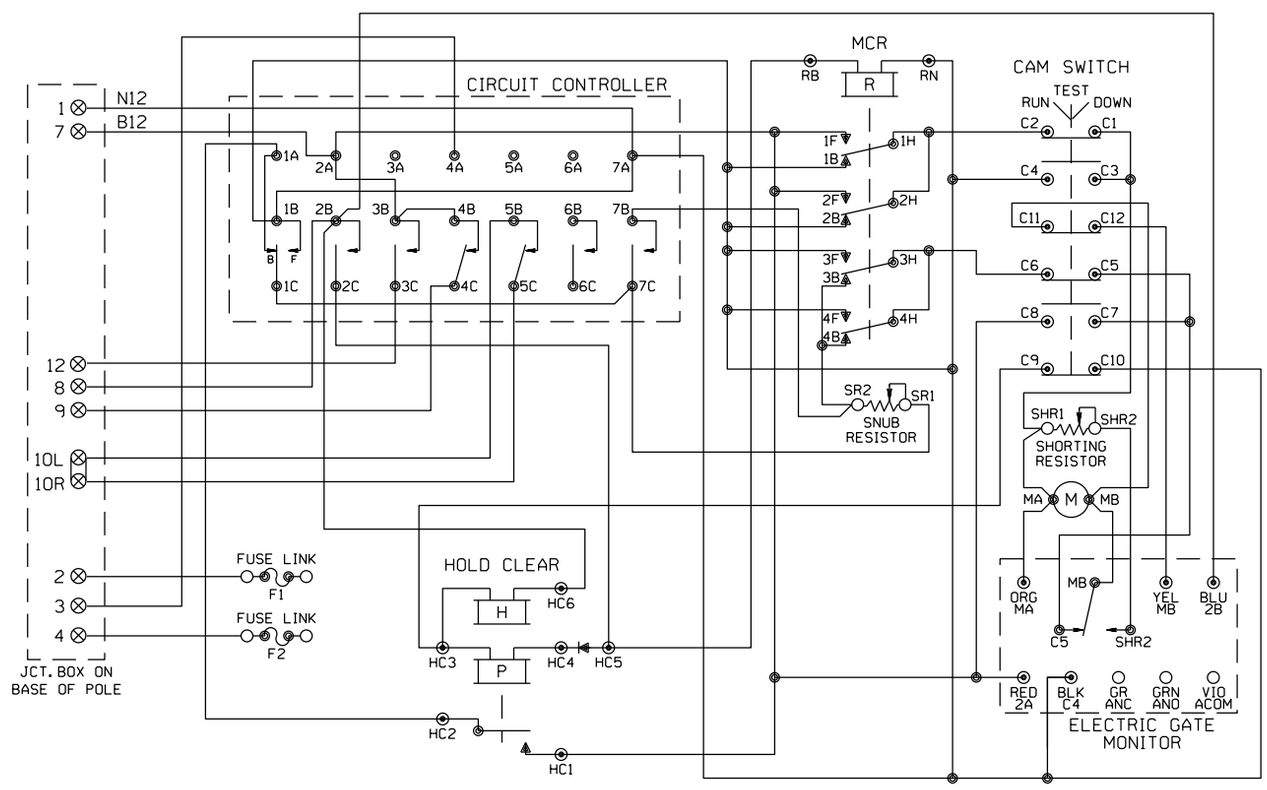

WCH 3597 ENTRANCE GATE

CONTACT	CLOSED	FUNCTION
1B	75-90	POWER DOWN
1F	0-70	SNUB DOWN
2	0-86	POWER UP
3	0-10	GATE DOWN
4	82-90	GATE CLEAR
5	10-90	BELL
6	SPARE	SPARE
7	0-10	SNUB

MECHANISM SHOWN IN CLEAR POSITION

FOR WIRING GATES "A" AND "B"

SHERMAN, ILLINOIS
TR 33 (WOLF CREEK RD)
M.P. 176.60
SPRINGFIELD SUBDIVISION
D.O.T.#294 280R

REV. 6-20-08
UPGRADED CROSSING PROTECTION FOR THE HIGH SPEED RAIL PROJ. FROM MAZONIA TO SPRINGFIELD
W.O. # 00183
REC. #15265
4-8-06 JJF
JR/WITT/WITT/JNM

MODIFICATION LEVEL	
Q.A. LAST LEVEL CHK'D.	DA
LAST LEVEL MOD. THIS TYP.	CZ
LAST LEVEL BY DESIGNER.	DD
CHANGED FROM TYP.? Y/N	Y

CIRCUIT MODIFICATIONS ARE NOT TO BE MADE WITHOUT AUTHORITY FROM THE OFFICE OF SIGNAL DESIGN

DES: WITT.IND.
DIG: WITT.IND.
CHK: J.J.F.
A.F.E. 00183
ID= CSL17660.8X

UNION PACIFIC RAILROAD
BLOOMINGTON, ILLINOIS TO VALLEY JCT., ILLINOIS
C.T.C. CIRCUITS
Office of AVP Engineering-Signal OMAHA NEBR.

DATE 4-1-02
SHEET 8
DWG 176.60
RTE-CSL

(REV. 7-9-00) (GWIRING.DGN)

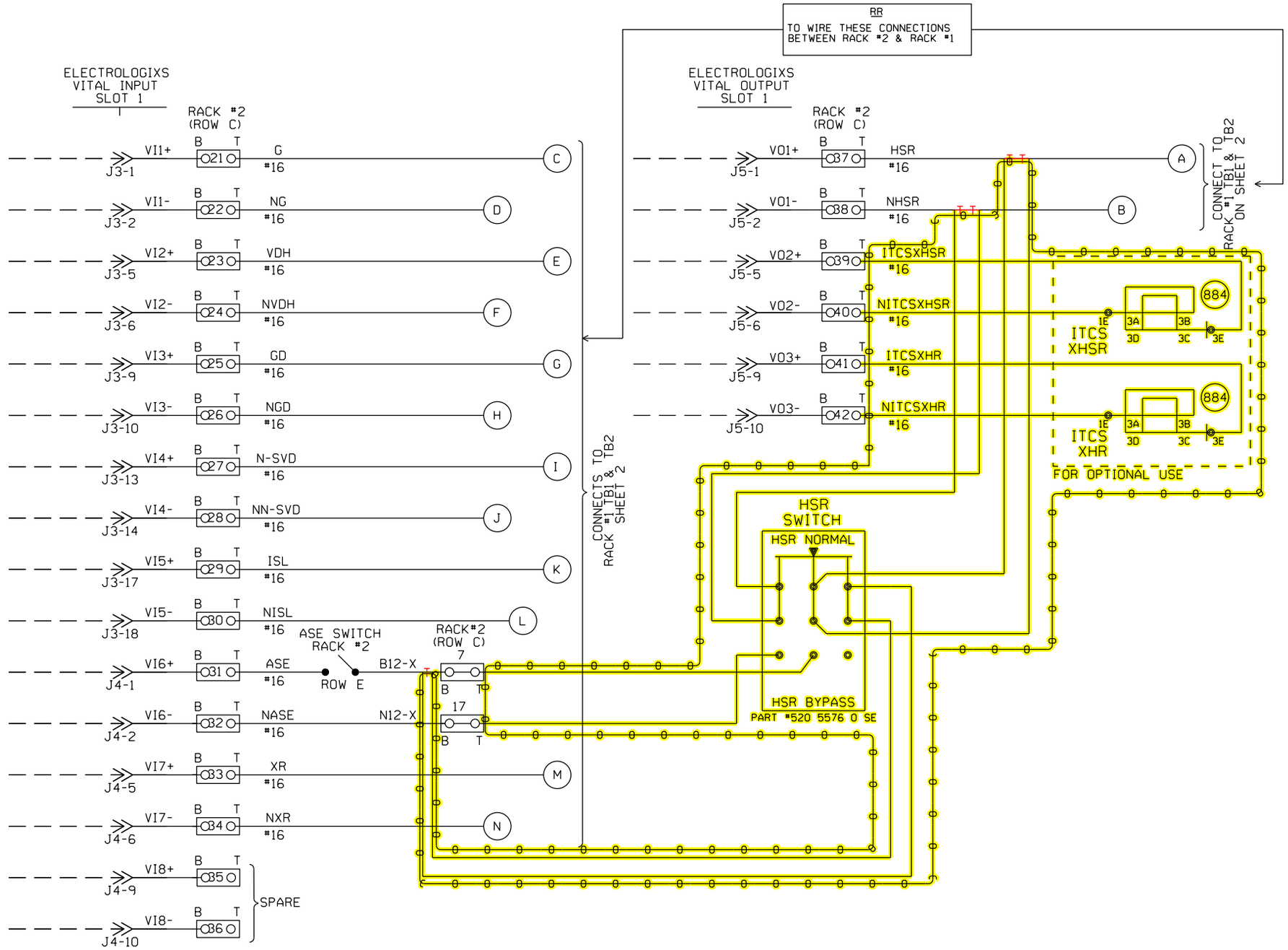

NOTES:

1. INPUT WIRES, OUTPUT WIRES, POWER WIRES, PUT IN SEPARATE BUNDLES.
2. ALL WIRES #16 UNLESS NOTED.
3. O?? O 2 POSITION WAGO BLOCK.

= IN

= OUT

NEW SHEET

Designed: 08/21/12
TIER 3 PHASE 3
M.P.177.00 TO M.P.160.00
UPGRADE XINGS AND CP'S FOR HIGH SPEED RAIL
Rec#: WO#: 22820
IS: /MWK
/ /NST/MJF

02-24-09 INSTALL MONITOR RACK FOR XINGS

W.O. 87933 MAS

CIRCUIT MODIFICATIONS ARE NOT TO BE MADE WITHOUT AUTHORITY FROM THE OFFICE OF SIGNAL DESIGN

Date: 09-25-08
Des: CRK
Chk:
AFE: 87933

UNION PACIFIC RAILROAD
SHERMAN, ILLINOIS
TR 33 (WOLF CREEK RD.)
SPRINGFIELD SUBDIVISION
Office of AVP Engineering-Signal Omaha, Nebraska

Sh.: 9A
DOT 294280R
MP: 176.60
ID: CSL17660.9AX