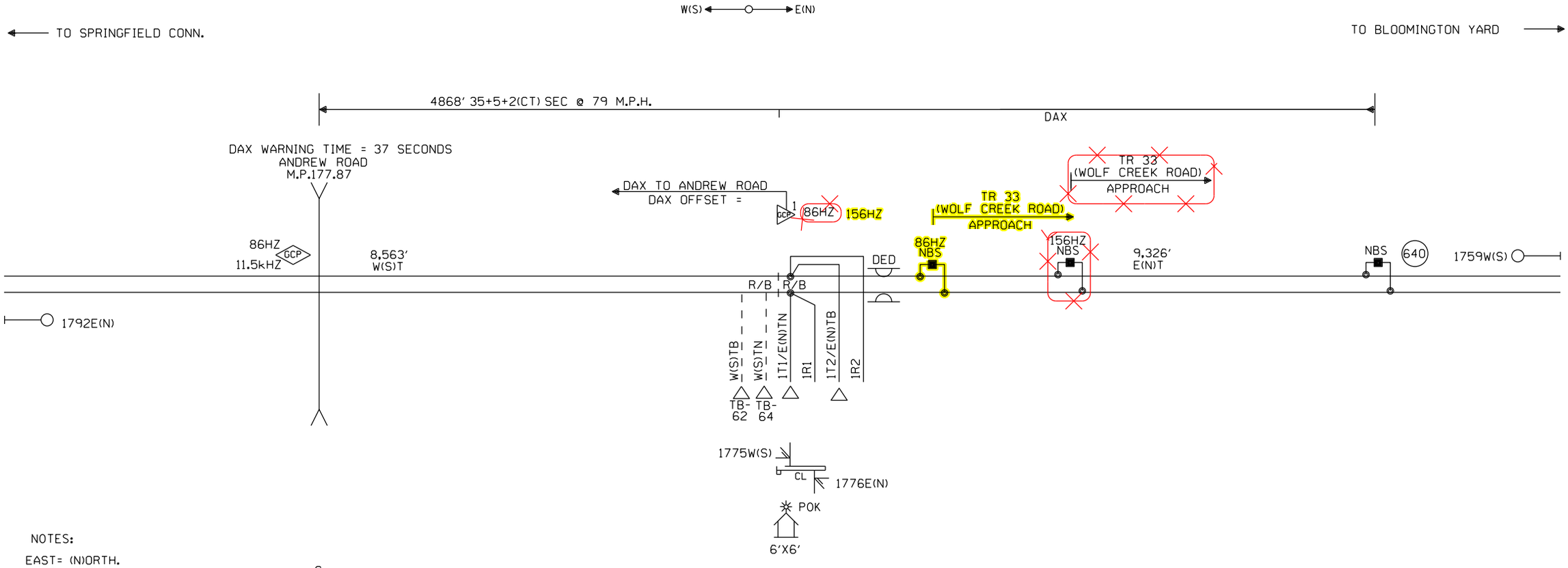


NOTES:

EAST= (N)ORTH.
WEST= (S)OUTH.

⊗ = TWISTED WIRES

⊘ = OBSERVE CORRECT POLARITY. EQUIPMENT WILL BE DAMAGED IF CONNECTIONS ARE REVERSED

ALL WIRING TO TRACK 2C. NO.6 U.G.B.T. CABLE UNLESS OTHERWISE SPECIFIED.

ALL CASE WIRING TO BE NO.16 UNLESS OTHERWISE SPECIFIED.

ALL GROUND CONNECTIONS TO BE #6 OR LARGER, SIGNAL WIRING SHOP TO RUN ALL GROUND CONNECTIONS.

△ = ENSURE TRACK POLARITY IS TRANSPOSED ACROSS ALL INSULATED JOINTS.

⧖ = TEST TERMINALS MUST BE INSTALLED ON ALL WIRING CONNECTED TO EXTERNAL CABLES (EXCEPT TRACK AND A.C. POWER WIRES).

SHOW ACTUAL DED INSTALLED LOCATION ON DRAWING.

PORTABLE GENERATOR EXTENSION CORD FOR 240V TO 240V IS PROVIDED AS WELL AS A 120V TO 240V ADAPTER.

TRANSMITTER AND RECEIVER LEADS TO BE SEPARATED BY AT LEAST 12" IN TRENCH, LENGTHS SHOULD NOT EXCEED MANUFACTURES RECOMMENDATION.

CONNECTS TO 177.87

CONNECTS TO 176.60

CONSTRUCTION NOTE:

1. ORDER GELCORE LED LIGHTS

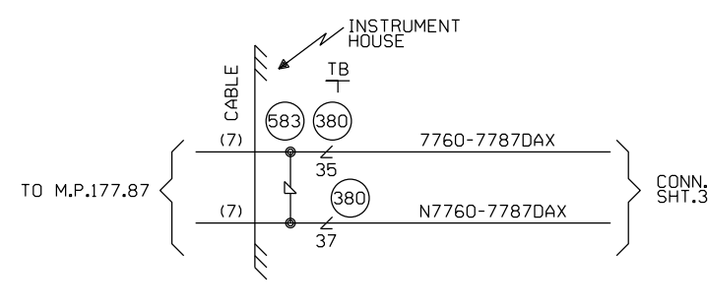


THE ONLY CHANGE TO THIS LOCATION IS ON SHEET 1 AND SHEET 3A. ALL OTHER SHEETS ARE FOR REFERENCE ONLY.

= IN
= OUT

CABLE TABULATION

CABLE #7 7C #14 U.G.B.T. HOUSE TO M.P. 177.87

NEW SHEET

| | | | | | | | | | | |
|---|---|---|---|---|---|---|---|---|---|---|
| | | | | Designed: 08/21/12 TIER 3 PHASE 3 M.P.177.00 TO M.P.160.00 UPGRADE XINGS AND CP'S FOR HIGH SPEED RAIL Rec#: WO#: 22820 IS: / /MWK /NST/MJF | Designed: 6/01/12 TIER 3 PHASE 2 M.P.194.00 TO M.P.177.00 UPGRADE XINGS TO 4 QUAD WITH EGMS, VARIOUS CP'S Rec#: WO#: 14052 IS: / /NST/MJF | MODIFICATION LEVEL | | CIRCUIT MODIFICATIONS ARE NOT TO BE MADE WITHOUT AUTHORITY FROM THE OFFICE OF SIGNAL DESIGN | Date: 06/01/12 | UNION PACIFIC RAILROAD | Sh.: 1 |
| | | | | | | Q.A. LAST LEVEL CHECKED | DU | | Des: NST | ONE TRACK INTERMEDIATE SPRINGFIELD SUBDIVISION | |
| | | | | | | LAST LEVEL MOD THIS TYPICAL | DU | | Chk: | | MP: 177.60 |
| | | | | | | LAST LEVEL BY DESIGNER | DU | | AFE: 14052 | Office of AVP Engineering-Signal Omaha, Nebraska | ID: CSL17760.1S |
| | | | | | | CHANGED FROM TYPICAL? | Y | | | | |
| | | | | | | REV 8/20/10 1TMLHBINTU.1 | | | | | |

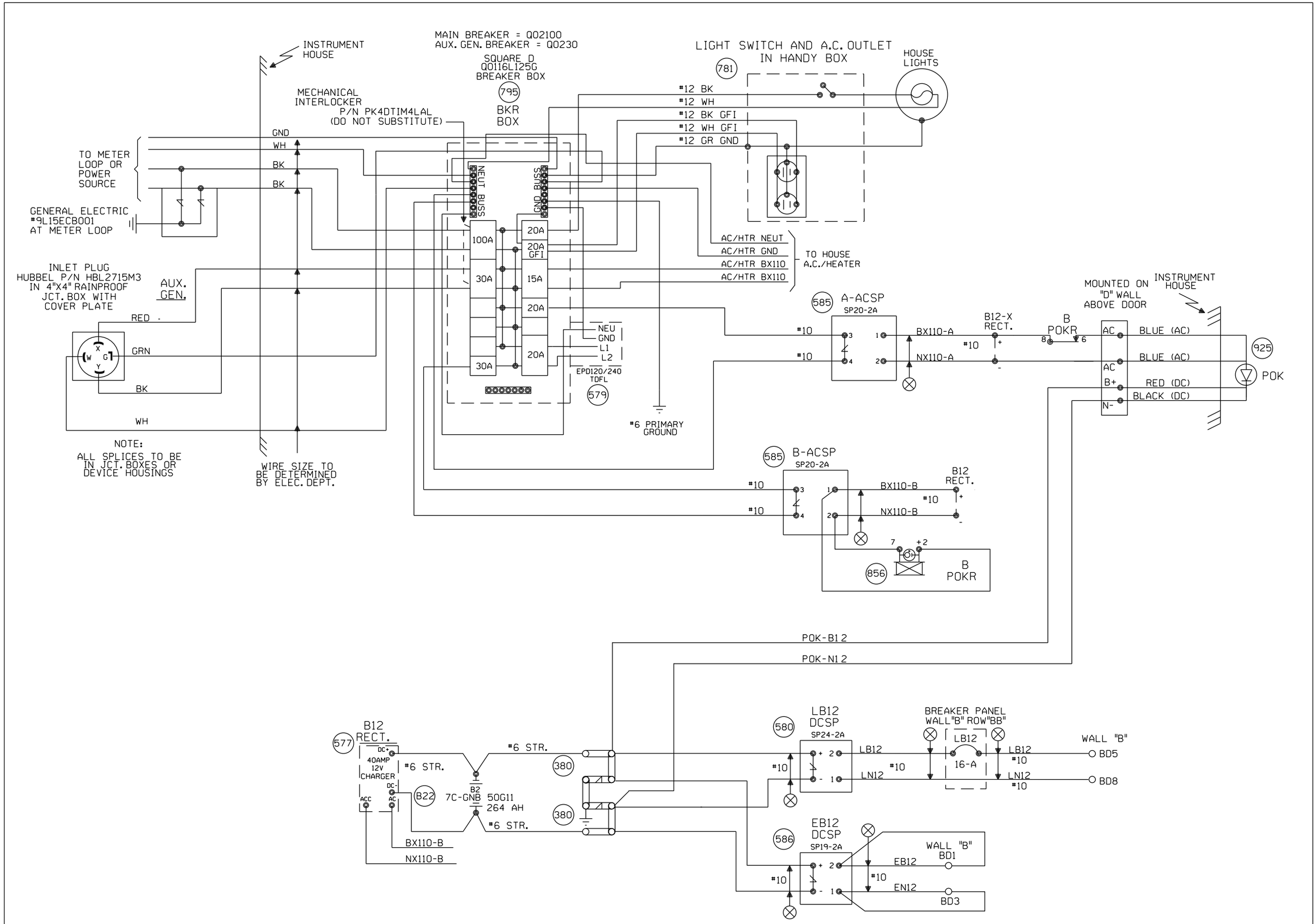


NEW SHEET

| | | | | | | | | | | |
|---|---|---|---|---|---|---|---|---|---|---|
| | | | | | Designed: 6/01/12<br>TIER 3 PHASE 2<br>M.P.194.00 TO<br>M.P.177.00<br>UPGRADE XINGS TO<br>4 QUAD WITH EGMS,<br>VARIOUS CP'S<br>Rec#: WO#: 14052<br>IS: / /NST/MJF | MODIFICATION LEVEL<br>Q.A. LAST LEVEL CHECKED DU<br>LAST LEVEL MOD THIS TYPICAL DU<br>LAST LEVEL BY DESIGNER DU<br>CHANGED FROM TYPICAL? Y<br>REV 01.24.11 4K SEARAC.2 | CIRCUIT MODIFICATIONS ARE NOT TO BE MADE WITHOUT AUTHORITY FROM THE OFFICE OF SIGNAL DESIGN | Date: 06/01/12<br>Des: NST<br>Chk:<br>AFE: 14052 | UNION PACIFIC RAILROAD<br>ONE TRACK INTERMEDIATE<br>SPRINGFIELD SUBDIVISION<br>Office of AVP Engineering-Signal Omaha, Nebraska | Sh.: 2<br>MP: 177.60<br>ID: CSL17760.2X |

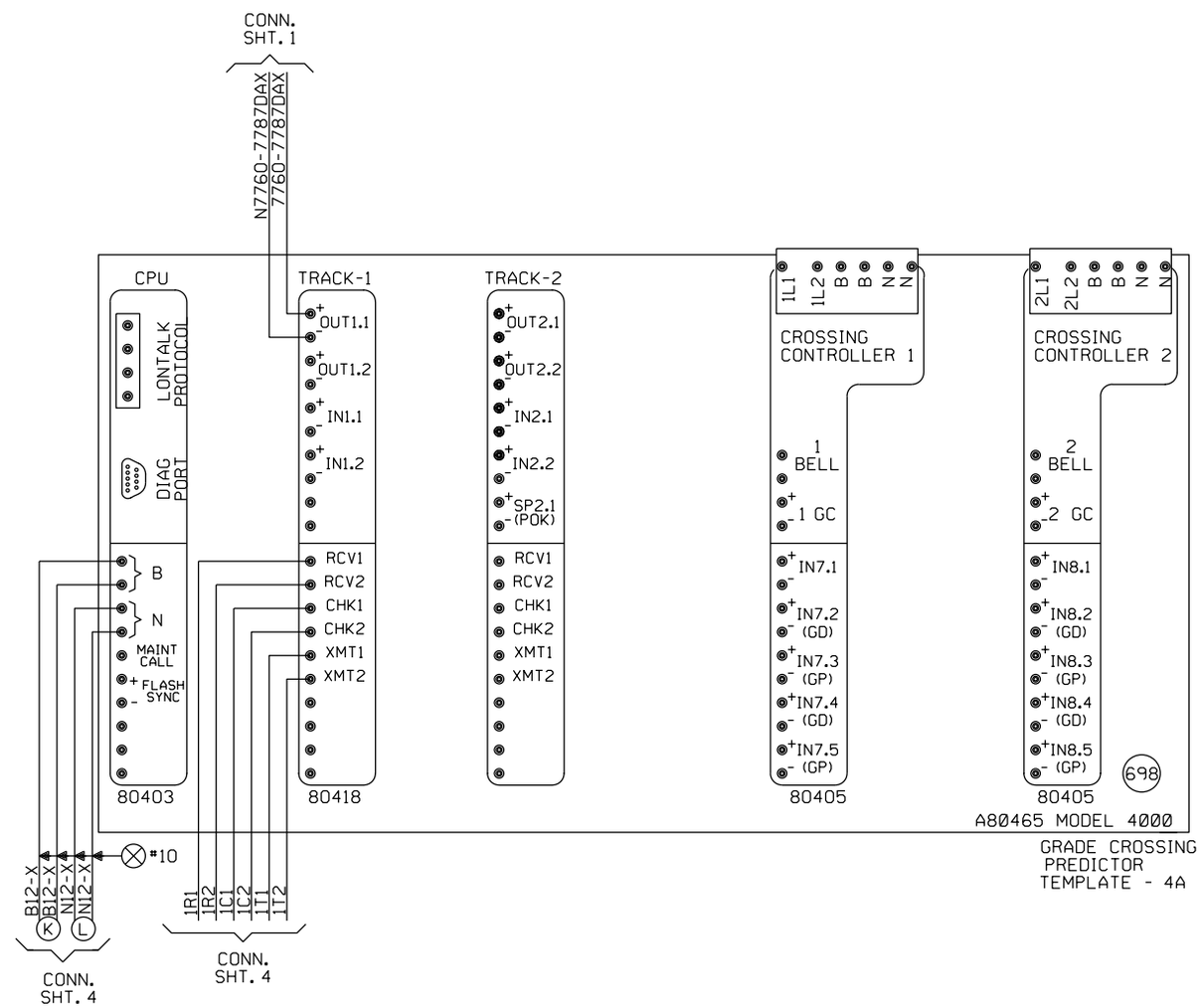


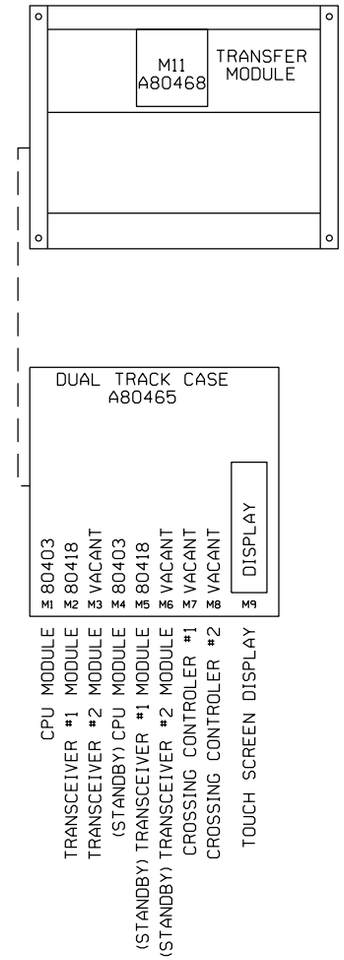


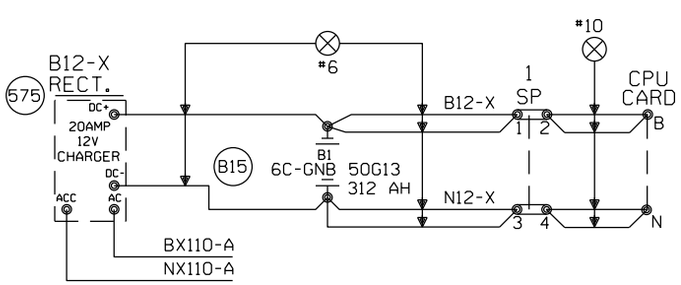


| "Mf" FREQUENCY (HZ) | MAXIMUM TRANSMIT WIRE LENGTH (FEET) |
|---|---|
| 86 | 100 |
| 114 | 125 |
| 156 | 150 |
| 211 | 200 |
| 285-970 | 250 |

NOTE:
EACH TRANSMITTER TO RAIL WIRE FROM XMT1 AND XMT2 MUST NOT EXCEED THE MAXIMUM LENGTH SPECIFIED IN THE TABLE SHOWN. THE RECEIVER WIRE LENGTH IS NOT CRITICAL. DOES NOT APPLY TO 6 TRACK WIRE APPLICATION.

NEW SHEET

Designed: 6/01/12
TIER 3 PHASE 2
M.P.194.00 TO
M.P.177.00
UPGRADE XINGS TO
4 QUAD WITH EGMS,
VARIOUS CP'S
Rec#: WO#: 14052
IS: / /
/NST/MJF

| MODIFICATION LEVEL | |
|---|---|
| O. A. LAST LEVEL CHECKED | DU |
| LAST LEVEL MOD THIS TYPICAL | DU |
| LAST LEVEL BY DESIGNER | DU |
| CHANGED FROM TYPICAL? | Y |
| REV 01.24.11 4K 2TKGF.3 | |

CIRCUIT MODIFICATIONS ARE NOT TO BE MADE WITHOUT AUTHORITY FROM THE OFFICE OF SIGNAL DESIGN

Date: 06/01/12
Des: NST
Chk:
AFE: 14052

UNION PACIFIC RAILROAD

ONE TRACK INTERMEDIATE
SPRINGFIELD SUBDIVISION

Office of AVP Engineering-Signal Omaha, Nebraska

Sh.: 3
MP: 177.60
ID: CSL17760.3X

## Minimum Program Steps Report

### Location and SIN

DOT Number: 000000R
Milepost Number: 177.60
Site Name: SHERMAN, IL

SIN: 762010010016 *

* Parameter is part of office check number calculation.

### MCF and Template Selection

MCF Name: GCP-T6X-02-4.mcf
MCF Revision: 24
MCFCRC: 09FC363B

Template = 4A:6 Remotes (OCCN) *

* Parameter is part of office check number calculation.

### Minimum Program Steps

TEMPLATE: track 1-Remote Dax
Track 1 : GCP Frequency = 156 Hz (Field,TCN)
Track 1 : Approach Distance = 3612 ft (Set in Field,TCN)
Track 1 : Dax A Warning Time = 37 sec (OCCN) *
Track 1 : Dax A Offset Distance = 1256 ft (Set in Field)
Track 1 : GCP Transmit Level = Medium (Set in Field,TCN)

TEMPLATE: OOS
OOS Timeout = 1 hrs (Set in Field)

TEMPLATE: OP assignment 1
OUT 1.1 = T1 Dax A (OCCN) *

ADVANCED: site options
Daylight Savings = Off (Set in Field)

* Parameter is part of office check number calculation.

### Check Numbers

Office Check Number: 07AEC868
Config. Check Number: 7ABE2B38
(Based on MCF Revision 24)

Parameters not part of office check number calculation:

Track 1 : GCP Frequency = 156 Hz
Track 1 : Approach Distance = 3612 ft (Set in Field)
Track 1 : Dax A Offset Distance = 1256 ft (Set in Field)
Track 1 : GCP Transmit Level = Medium (Set in Field)
OOS Timeout = 1 hrs (Set in Field)
Daylight Savings = Off (Set in Field)

### Comments

<none>

### Configuration Package File

Filename: CSL17760_000000R.pac
Path: H:\UP\SpringfIeld Sub Tier 3 Ph. 3 11-404-3\PAC Files\177.60\
Date/Time: 7/19/2013 12:02:59

NEW SHEET

| | | | | | | | | | |
|---|---|---|---|---|---|---|---|---|---|
| | | | | Designed: 08/21/12<br>TIER 3 PHASE 3<br>M.P.177.00 TO<br>M.P.160.00<br>UPGRADE XINGS AND<br>CP'S FOR HIGH<br>SPEED RAIL<br>Rec#: WO#: 22820<br>IS: /MWK<br>/ /NST/MJF | NOTE: Actual OFFSET and ISLAND distances must be verified by field personnel. | CIRCUIT MODIFICATIONS ARE NOT TO BE MADE WITHOUT AUTHORITY FROM THE OFFICE OF SIGNAL DESIGN | Date: 08/21/12<br>Des: NST<br>Chk: MWK<br>AFE: 22820 | UNION PACIFIC RAILROAD<br>ONE TRACK INTERMEDIATE<br>SPRINGFIELD SUBDIVISION<br>Office of AVP Engineering - Signal Omaha, Nebraska | Sh.: 3A<br>MP: 177.60<br>ID: CSL17760.3AX |

Minimum Program Steps Report
---

Location and SIN
---
DOT Number: 000000R
Milepost Number: 177.60
Site Name: SHERMAN, IL

SIN: 762010010016 *

* Parameter is part of office check number calculation.

MCF and Template Selection
---
MCF Name: GCP-T6X-02-4.mcf
MCF Revision: 24
MCFCRC: 09FC363B

Template = 4A:6 Remotes (OCCN) *

* Parameter is part of office check number calculation.

Minimum Program Steps
---
TEMPLATE: track 1-Remote Dax
Track 1: GCP Frequency = 86 Hz (Field,TCN)
Track 1: Approach Distance = 3612 ft (Set in Field,TCN)
Track 1: Dax A Warning Time = 37 sec (OCCN) *
Track 1: Dax A Offset Distance = 1256 ft (Set in Field)
Track 1: GCP Transmit Level = Medium (Set in Field,TCN)

TEMPLATE: OOS
OOS Timeout = 1 hrs (Set in Field)

TEMPLATE: OP assignment 1
OUT 1.1 = T1 Dax A (OCCN) *

ADVANCED: site options
Daylight Savings = Off (Set in Field)

* Parameter is part of office check number calculation.

Check Numbers
---
Office Check Number: 07AEC868
Config. Check Number: 3C1903B3
(Based on MCF Revision 24)

Parameters not part of office check number calculation:

Track 1: GCP Frequency = 86 Hz
Track 1: Approach Distance = 3612 ft (Set in Field)
Track 1: Dax A Offset Distance = 1256 ft (Set in Field)
Track 1: GCP Transmit Level = Medium (Set in Field)
OOS Timeout = 1 hrs (Set in Field)
Daylight Savings = Off (Set in Field)

Comments
---
<none>

Configuration Package File
---
Filename: CSL17760_000000R.pac
Path: H:\UP\Springfield Sub Tier 3 Ph. 2 11-404-2\PAC Files\177.60\
Date/Time: 6/18/2013 11:49:15

TO BE VOIDED
08/21/12
W.O. 22820 NST/MJF

NEW SHEET

| | | | | | | | | | |
|---|---|---|---|---|---|---|---|---|---|
| | | | | Designed: 6/01/12<br>TIER 3 PHASE 2<br>M.P.194.00 TO<br>M.P.177.00<br>UPGRADE XINGS TO<br>4 QUAD WITH EGMS,<br>VARIOUS CP'S<br>Rec#: WO#: 14052<br>IS: / /<br>/ /NST/MJF | **NOTE: Actual OFFSET and ISLAND distances must be verified by field personnel.** | CIRCUIT MODIFICATIONS ARE NOT TO BE MADE WITHOUT AUTHORITY FROM THE OFFICE OF SIGNAL DESIGN | Date: 06/01/12<br>Des: NST<br>Chk:<br>AFE: 14052 | **UNION PACIFIC RAILROAD**<br>ONE TRACK INTERMEDIATE<br>SPRINGFIELD SUBDIVISION<br>Office of AVP Engineering-Signal Omaha, Nebraska | Sh.: 3A<br>MP: 177.60<br>ID: CSL17760.3AX |

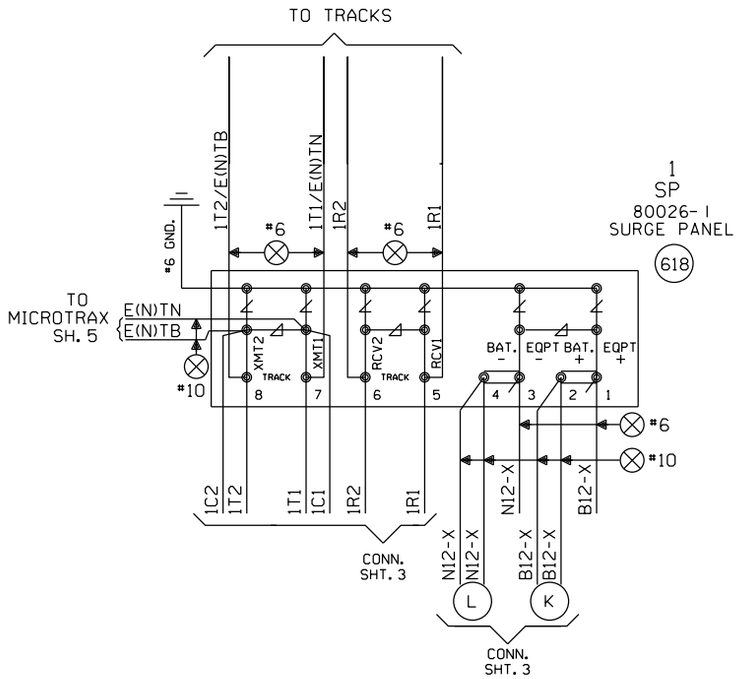


NEW SHEET

| | | | | | | | | | | | |
|---|---|---|---|---|---|---|---|---|---|---|---|
| | | | | | Designed: 6/01/12<br>TIER 3 PHASE 2<br>M.P.194.00 TO<br>M.P.177.00<br>UPGRADE XINGS TO<br>4 QUAD WITH EGMS,<br>VARIOUS CP'S<br>Rec#: WO#: 14052<br>IS: / /<br>/ /NST/MJF | MODIFICATION LEVEL | | CIRCUIT MODIFICATIONS ARE NOT TO BE MADE WITHOUT AUTHORITY FROM THE OFFICE OF SIGNAL DESIGN | Date: 06/01/12 | UNION PACIFIC RAILROAD | Sh.: 4 |
| | | | | | | Q. A. LAST LEVEL CHECKED | DU | | Des: NST | | |
| | | | | | | LAST LEVEL MOD THIS TYPICAL | DU | | Chk: | ONE TRACK INTERMEDIATE<br>SPRINGFIELD SUBDIVISION | MP: 177.60 |
| | | | | | | LAST LEVEL BY DESIGNER | DU | | | | |
| | | | | | | CHANGED FROM TYPICAL?<br>REV 01.24.11 4K REMOTE.4 | Y | | AFE: 14052 | Office of AVP Engineering-Signal Omaha, Nebraska | ID: CSL17760.4X |

NOTES:

EAST= (N)ORTH.
WEST= (S)OUTH.

⊗ = TWISTED WIRES

⊘ = OBSERVE CORRECT POLARITY. EQUIPMENT WILL BE DAMAGED IF CONNECTIONS ARE REVERSED

ALL WIRING TO TRACK 2C. NO.6 U.G.B.T. CABLE UNLESS OTHERWISE SPECIFIED.

ALL CASE WIRING TO BE NO.16 UNLESS OTHERWISE SPECIFIED.

ALL GROUND CONNECTIONS TO BE #6 OR LARGER, SIGNAL WIRING SHOP TO RUN ALL GROUND CONNECTIONS.

ENSURE TRACK POLARITY IS TRANSPOSED ACROSS ALL INSULATED JOINTS.

⧖ = TEST TERMINALS MUST BE INSTALLED ON ALL WIRING CONNECTED TO EXTERNAL CABLES (EXCEPT TRACK AND A.C. POWER WIRES).

PORTABLE GENERATOR EXTENSION CORD FOR 240V TO 240V IS PROVIDED AS WELL AS A 120V TO 240V ADAPTER.

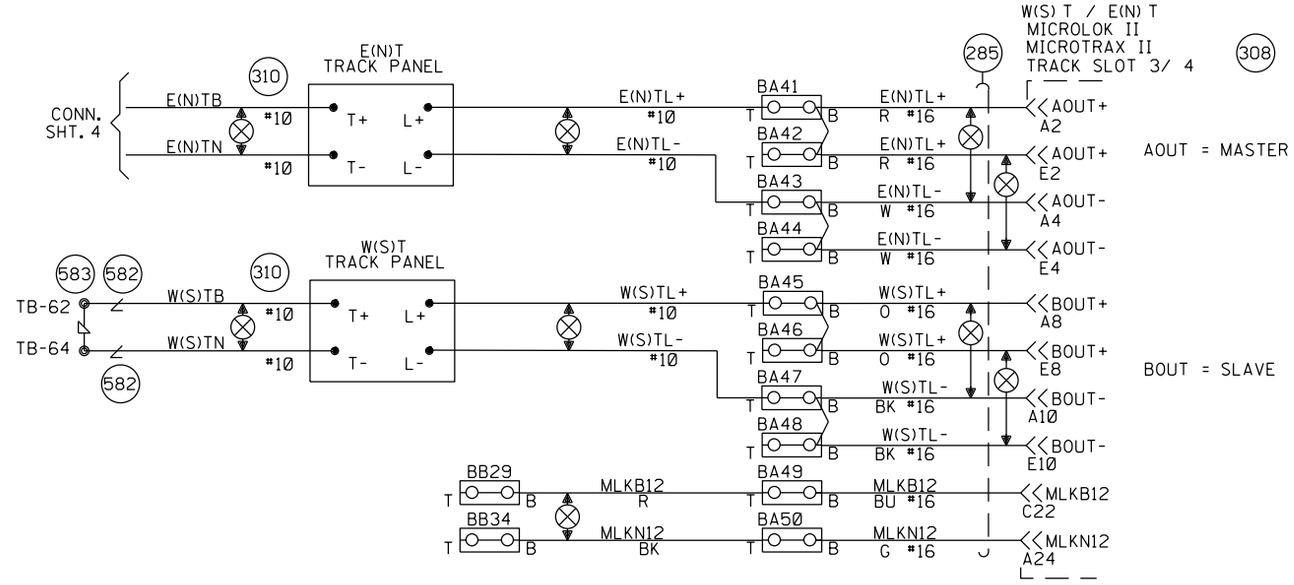


NEW SHEET

| | | | | | | | | | | | |
|---|---|---|---|---|---|---|---|---|---|---|---|
| | | | | | Designed: 6/01/12 TIER 3 PHASE 2 M.P.194.00 TO M.P.177.00 UPGRADE XINGS TO 4 QUAD WITH EGMS, VARIOUS CP'S Rec#: WO#: 14052 IS: / / / NST/MJF | MODIFICATION LEVEL | | CIRCUIT MODIFICATIONS ARE NOT TO BE MADE WITHOUT AUTHORITY FROM THE OFFICE OF SIGNAL DESIGN | Date: 06/01/12 | UNION PACIFIC RAILROAD | Sh.: 5 |
| | | | | | | Q.A. LAST LEVEL CHECKED | DU | | Des: NST | | |
| | | | | | | LAST LEVEL MOD THIS TYPICAL | DU | | Chk: | ONE TRACK INTERMEDIATE SPRINGFIELD SUBDIVISION | MP: 177.60 |
| | | | | | | LAST LEVEL BY DESIGNER | DU | | AFE: 14052 | Office of AVP Engineering-Signal Omaha, Nebraska | ID: CSL17760.5S |
| | | | | | | CHANGED FROM TYPICAL? REV 8/20/10 1TMLHBINTU.1 | Y | | | | |

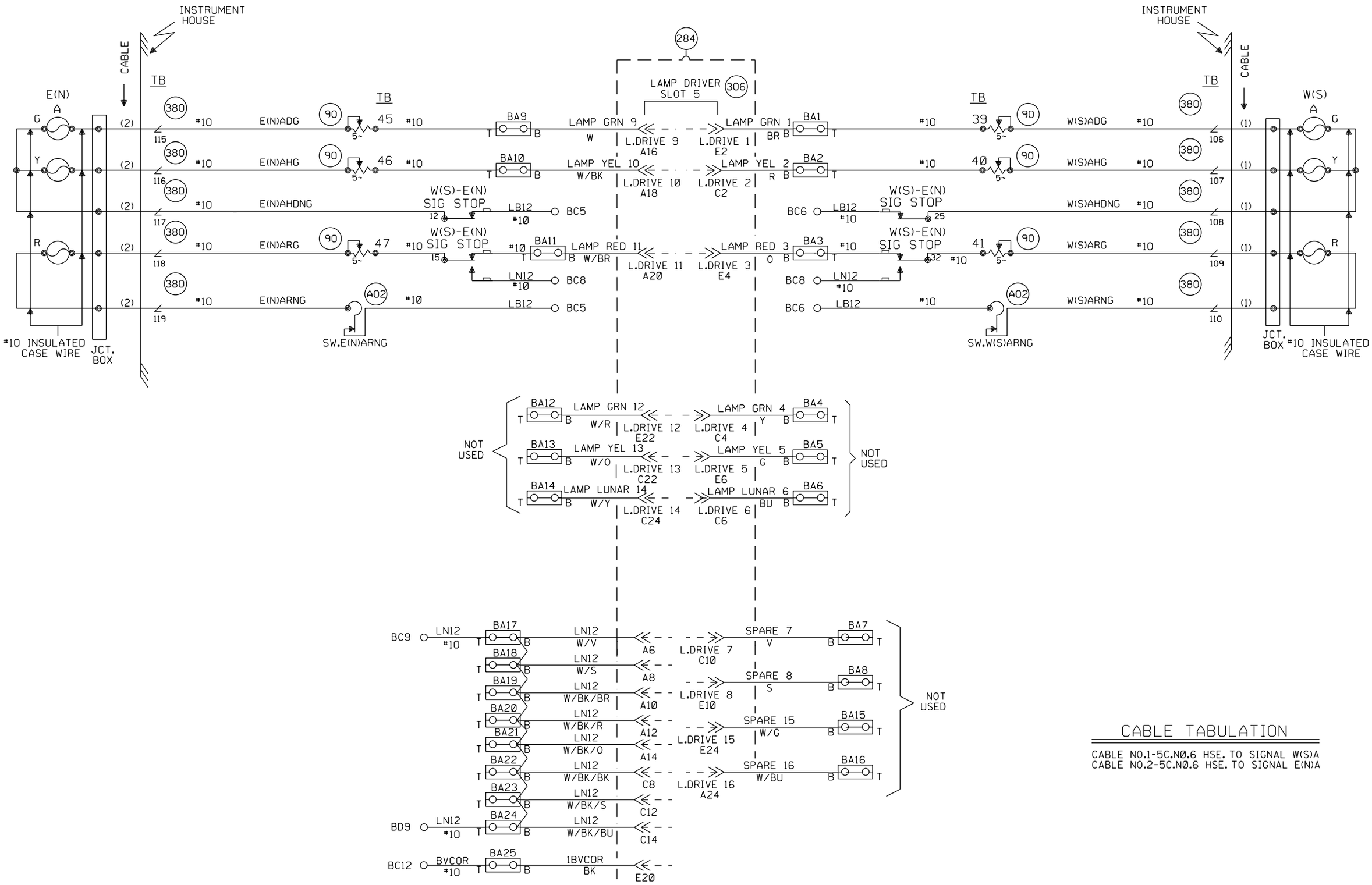


## CABLE TABULATION

CABLE NO.1-5C.N0.6 HSE. TO SIGNAL W(S)A
CABLE NO.2-5C.N0.6 HSE. TO SIGNAL E(N)A

NEW SHEET

| | | | | | | | | | | | |
|---|---|---|---|---|---|---|---|---|---|---|---|
| | | | | | Designed: 6/01/12 TIER 3 PHASE 2 M.P.194.00 TO M.P.177.00 UPGRADE XINGS TO 4 QUAD WITH EGMS, VARIOUS CP'S Rec#: WO#: 14052 IS: / / / /NST/MJF | MODIFICATION LEVEL | | CIRCUIT MODIFICATIONS ARE NOT TO BE MADE WITHOUT AUTHORITY FROM THE OFFICE OF SIGNAL DESIGN | Date: 06/01/12 | UNION PACIFIC RAILROAD | Sh.: 6 |
| | | | | | | Q.A. LAST LEVEL CHECKED | DU | | Des: NST | | |
| | | | | | | LAST LEVEL MOD THIS TYPICAL | DU | | Chk: | ONE TRACK INTERMEDIATE SPRINGFIELD SUBDIVISION | MP: 177.60 |
| | | | | | | LAST LEVEL BY DESIGNER | DU | | | | |
| | | | | | | CHANGED FROM TYPICAL? | Y | | AFE: 14052 | Office of AVP Engineering-Signal Omaha, Nebraska | ID: CSL17760.6S |
| | | | | | | REV 8/20/10 ITMLHBINTUGS.3 | | | | | |

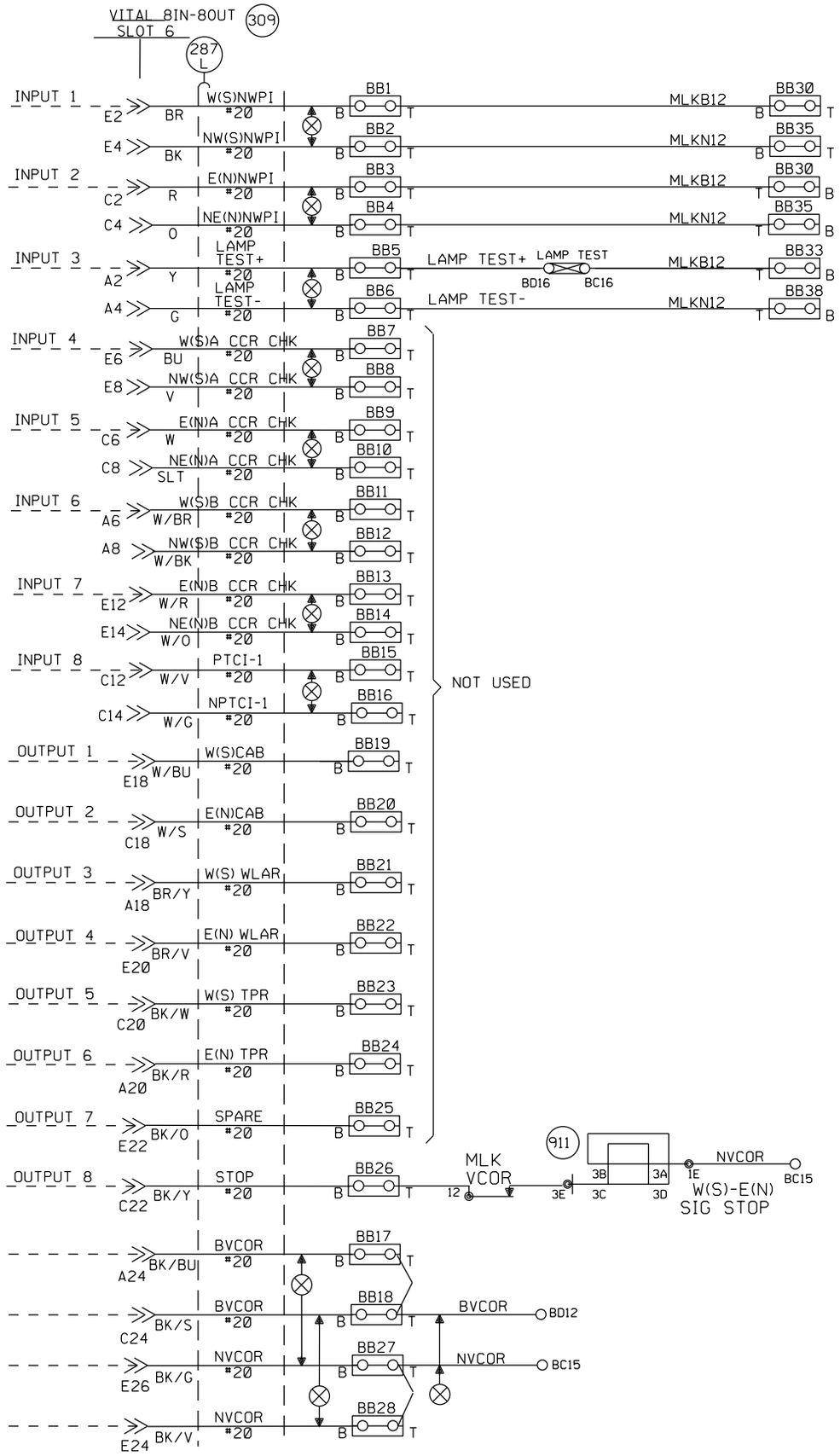


NEW SHEET

| | | | | | | | | | | |
|---|---|---|---|---|---|---|---|---|---|---|
| | | | | | Designed: 6/01/12<br>TIER 3 PHASE 2<br>M.P.194.00 TO<br>M.P.177.00<br>UPGRADE XINGS TO<br>4 QUAD WITH EGMS,<br>VARIOUS CP'S<br>Rec#: WO#: 14052<br>IS: / /NST/MJF | MODIFICATION LEVEL | | CIRCUIT MODIFICATIONS ARE NOT TO BE MADE WITHOUT AUTHORITY FROM THE OFFICE OF SIGNAL DESIGN | Date: 06/01/12<br>Des: NST<br>Chk:<br>AFE: 14052 | UNION PACIFIC RAILROAD<br>ONE TRACK INTERMEDIATE<br>SPRINGFIELD SUBDIVISION<br>Office of AVP Engineering-Signal Omaha, Nebraska | Sh.: 6A<br>MP: 177.60<br>ID: CSL17760.6AS |
| | | | | | | Q.A. LAST LEVEL CHECKED | DQ | | | |
| | | | | | | LAST LEVEL MOD THIS TYPICAL | DQ | | | |
| | | | | | | LAST LEVEL BY DESIGNER | DU | | | |
| | | | | | | CHANGED FROM TYPICAL?<br>REV 10/16/09 1TMLHBINTC.3A | Y | | | |

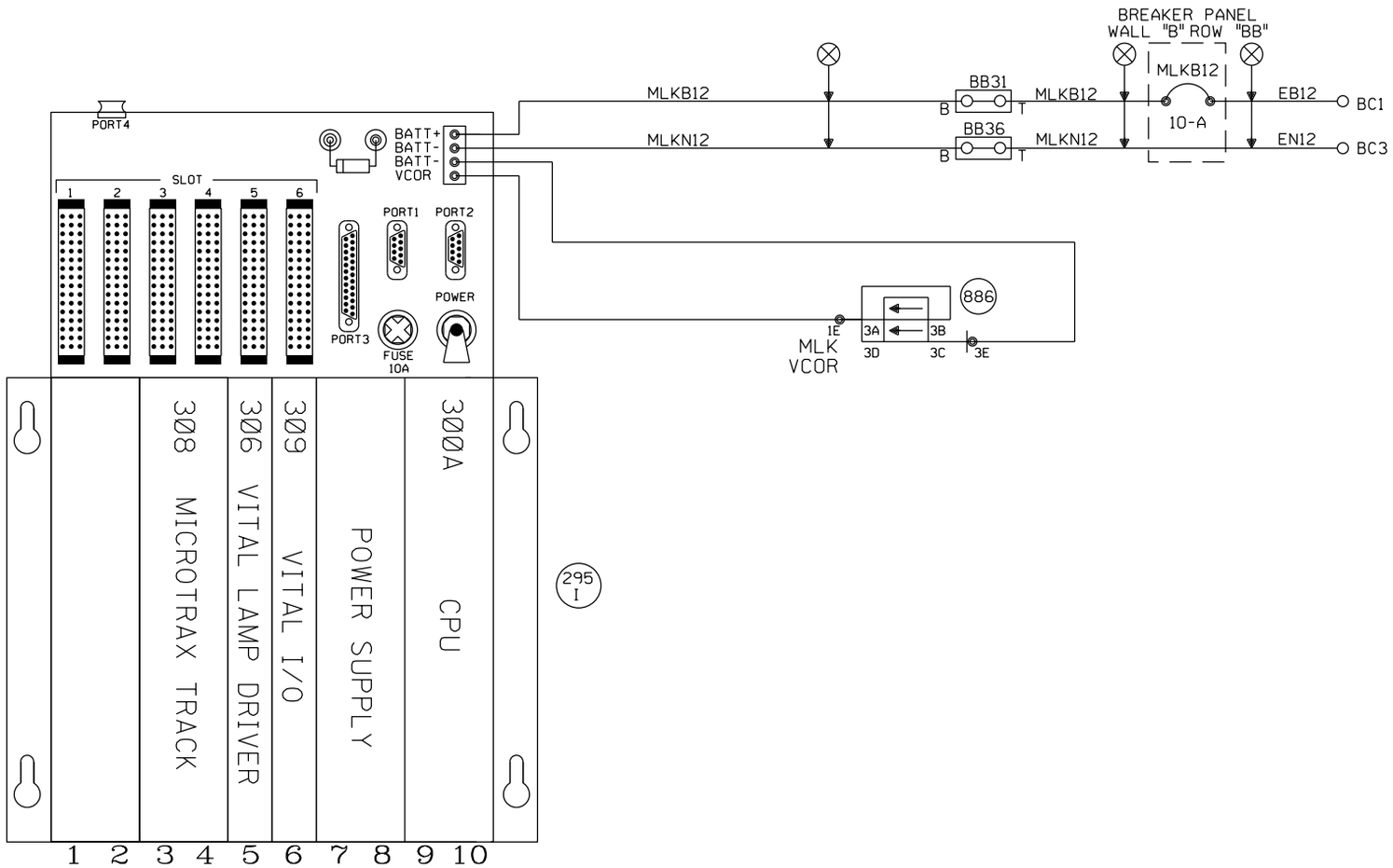


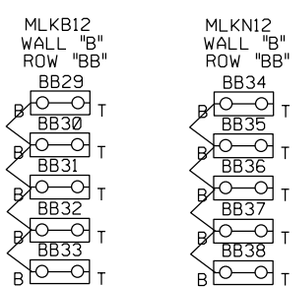


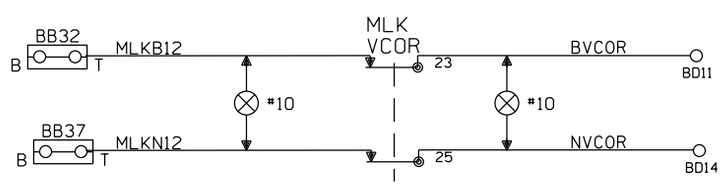


NEW SHEET

| | | | | | | | | | | |
|---|---|---|---|---|---|---|---|---|---|---|
| | | | | | Designed: 6/01/12<br>TIER 3 PHASE 2<br>M.P.194.00 TO<br>M.P.177.00<br>UPGRADE XINGS TO<br>4 QUAD WITH EGMS,<br>VARIOUS CP'S<br>Rec#: WO#: 14052<br>IS: / /<br>/ /NST/MJF | MODIFICATION LEVEL<br>O. A. LAST LEVEL CHECKED DU<br>LAST LEVEL MOD THIS TYPICAL DU<br>LAST LEVEL BY DESIGNER DU<br>CHANGED FROM TYPICAL? Y<br>REV 8/20/10 1TMLHBINTU.4 | CIRCUIT MODIFICATIONS ARE NOT TO BE MADE WITHOUT AUTHORITY FROM THE OFFICE OF SIGNAL DESIGN | Date: 06/01/12<br>Des: NST<br>Chk:<br>AFE: 14052 | UNION PACIFIC RAILROAD<br>ONE TRACK INTERMEDIATE<br>SPRINGFIELD SUBDIVISION<br>Office of AVP Engineering-Signal Omaha, Nebraska | Sh.: 7<br>MP: 177.60<br>ID: CSL17760.7S |

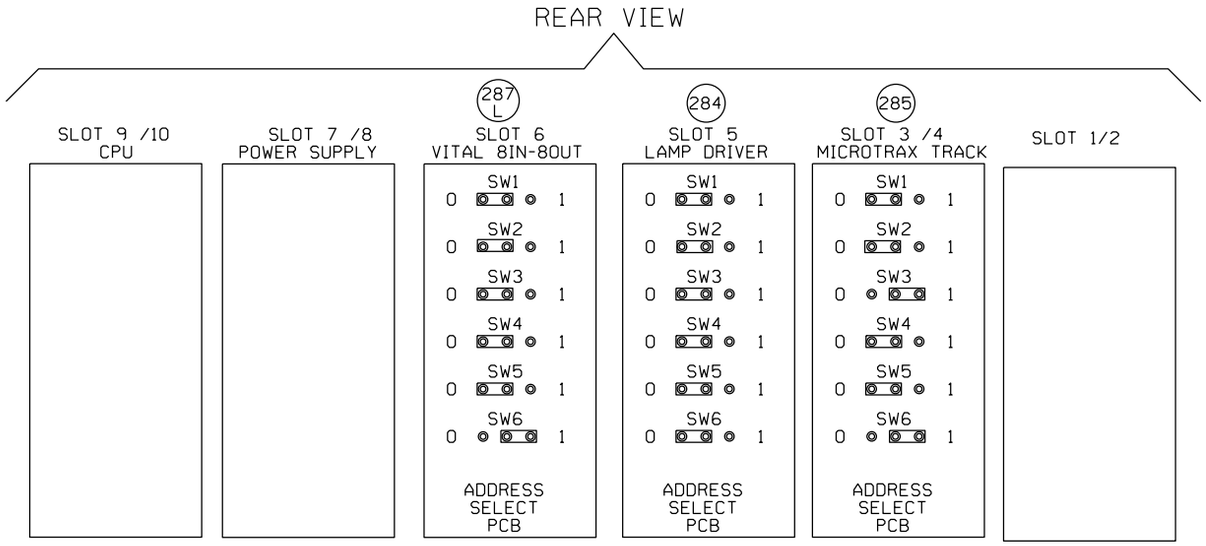


NOTE: FOR PTC COMPATIBLE CPU JUMPER SETTINGS REFER TO
ANSALDO MANUAL 1D1.0028 PAGE 1-26 1-27 1-28 REV.1 DATE 8/2009

IF BOX CHECKED SET
APPROPRIATE PROG. ID

ML8UCCB_N

| | | |
|---|---|---|
| 15 SEC SLOW PICK ET TO PREVENT JOINT HOP | | USE WHEN INTERFACING MICRO-ECODE TO GETS ECODE |
| 15 SEC SLOW PICK WT TO PREVENT JOINT HOP | | USE WHEN INTERFACING MICRO-ECODE TO GETS ECODE |
| DISABLE DBFY EAST ? | X | (SET PROG ID 1) |
| DISABLE DBFY WEST ? | X | (SET PROG ID 2) |
| PROGRAM ID 1 (BINARY 1) | X | |
| PROGRAM ID 2 (BINARY 2) | X | |
| PROGRAM ID 3 (BINARY 4) | | (MUST BE CLEAR) |
| PROGRAM ID 4 (BINARY 8) | | (MUST BE CLEAR) |
| PROGRAM ID 5 (BINARY 16) | | (MUST BE CLEAR) |
| PROGRAM ID 6 (BINARY 32) | | (MUST BE CLEAR) |
| PROGRAM ID 7 (BINARY 64) | | (SET TO DISABLE VIO8 CAB) |
| PROGRAM ID 8 (BINARY 128) | X | (MUST BE SET) |
| PROGRAM ID 9 (BINARY 256) | | (SET TO DISABLE INCAND. SIG BOARD) |
| PROGRAM ID 10 (BINARY 512) | X | (SET TO DISABLE LED SIG BOARD) |
| PROGRAM ID 11 (BINARY 1024) | | |
| PROGRAM ID 12 (BINARY 2048) | | |
| PROGRAM ID 13 (BINARY 4096) | | |
| PROGRAM ID 14 (BINARY 8192) | | |
| PROGRAM ID 15 (BINARY 16384) | | |
| PROGRAM ID 16 (BINARY 32768) | | |
| WEST TK UP SEND C5 EAST | X | |
| REC C5 W TK SEND C5 EAST | | |
| EAST TK UP SEND C5 WEST | X | |
| REC C5 E TK SEND C5 WEST | | |
| SET IF W(S) "B" FLASHING RED | | (SET PROG ID 11) |
| SET IF W(S) "B" LUNAR | | (SET PROG ID 12) |
| SET IF W(S) "B" YELLOW | | (SET PROG ID 13) |
| SET IF E(N) "B" FLASHING RED | | (SET PROG ID 14) |
| SET IF E(N) "B" LUNAR | | (SET PROG ID 15) |
| SET IF E(N) "B" YELLOW | | (SET PROG ID 16) |
| E(N) C5 APPLIT | X | (ENABLE APPLIT W(S) SIG W/LOSS OF C5) |
| W(S) C5 APPLIT | X | (ENABLE APPLIT E(N) SIG W/LOSS OF C5) |

NEW SHEET

Designed: 6/01/12
TIER 3 PHASE 2
M.P.194.00 TO
M.P.177.00
UPGRADE XINGS TO
4 QUAD WITH EGMS,
VARIOUS CP'S
Rec#: WO#: 14052
IS: / /
/ /NST/MJF

| MODIFICATION LEVEL | |
|---|---|
| Q. A. LAST LEVEL CHECKED | DU |
| LAST LEVEL MOD THIS TYPICAL | DU |
| LAST LEVEL BY DESIGNER | DU |
| CHANGED FROM TYPICAL? | Y |

REV 8/20/10 ITMLHBINTU.5

CIRCUIT MODIFICATIONS ARE NOT TO BE MADE WITHOUT AUTHORITY FROM THE OFFICE OF SIGNAL DESIGN

Date: 06/01/12
Des: NST
Chk:
AFE: 14052

UNION PACIFIC RAILROAD

ONE TRACK INTERMEDIATE
SPRINGFIELD SUBDIVISION

Office of AVP Engineering-Signal Omaha, Nebraska

Sh.: 8
MP: 177.60
ID: CSL17760.8S

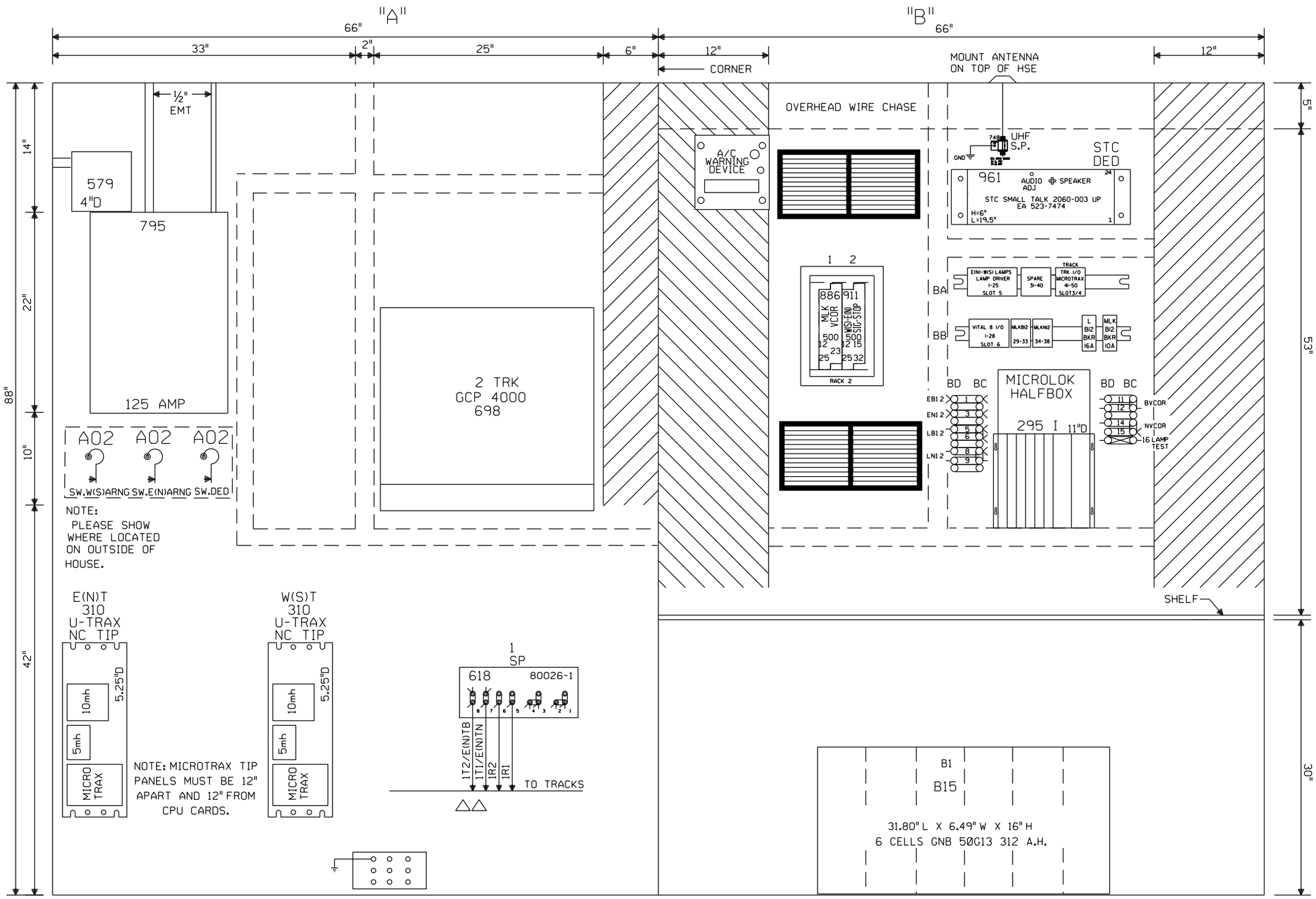


△ = FIELD VERIFY POLARITY

NEW SHEET

| | | | | | | | | | |
|---|---|---|---|---|---|---|---|---|---|
| | | | | | Designed: 6/01/12<br>TIER 3 PHASE 2<br>M.P.194.00 TO<br>M.P.177.00<br>UPGRADE XINGS TO<br>4 QUAD WITH EGMS,<br>VARIOUS CP'S<br>Rec#: WO#: 14052<br>IS: / /NST/MJF | MODIFICATION LEVEL<br>Q. A. LAST LEVEL CHECKED DU<br>LAST LEVEL MOD THIS TYPICAL DU<br>LAST LEVEL BY DESIGNER DU<br>CHANGED FROM TYPICAL? Y<br>REV 01.24.11 4K 4TKGFC.8 | CIRCUIT MODIFICATIONS ARE NOT TO BE MADE WITHOUT AUTHORITY FROM THE OFFICE OF SIGNAL DESIGN | Date: 06/01/12<br>Des: NST<br>Chk:<br>AFE: 14052 | UNION PACIFIC RAILROAD<br>ONE TRACK INTERMEDIATE<br>SPRINGFIELD SUBDIVISION<br>Office of AVP Engineering-Signal Omaha, Nebraska | Sh.: 9<br>MP: 177.60<br>ID: CSL17760.9S |

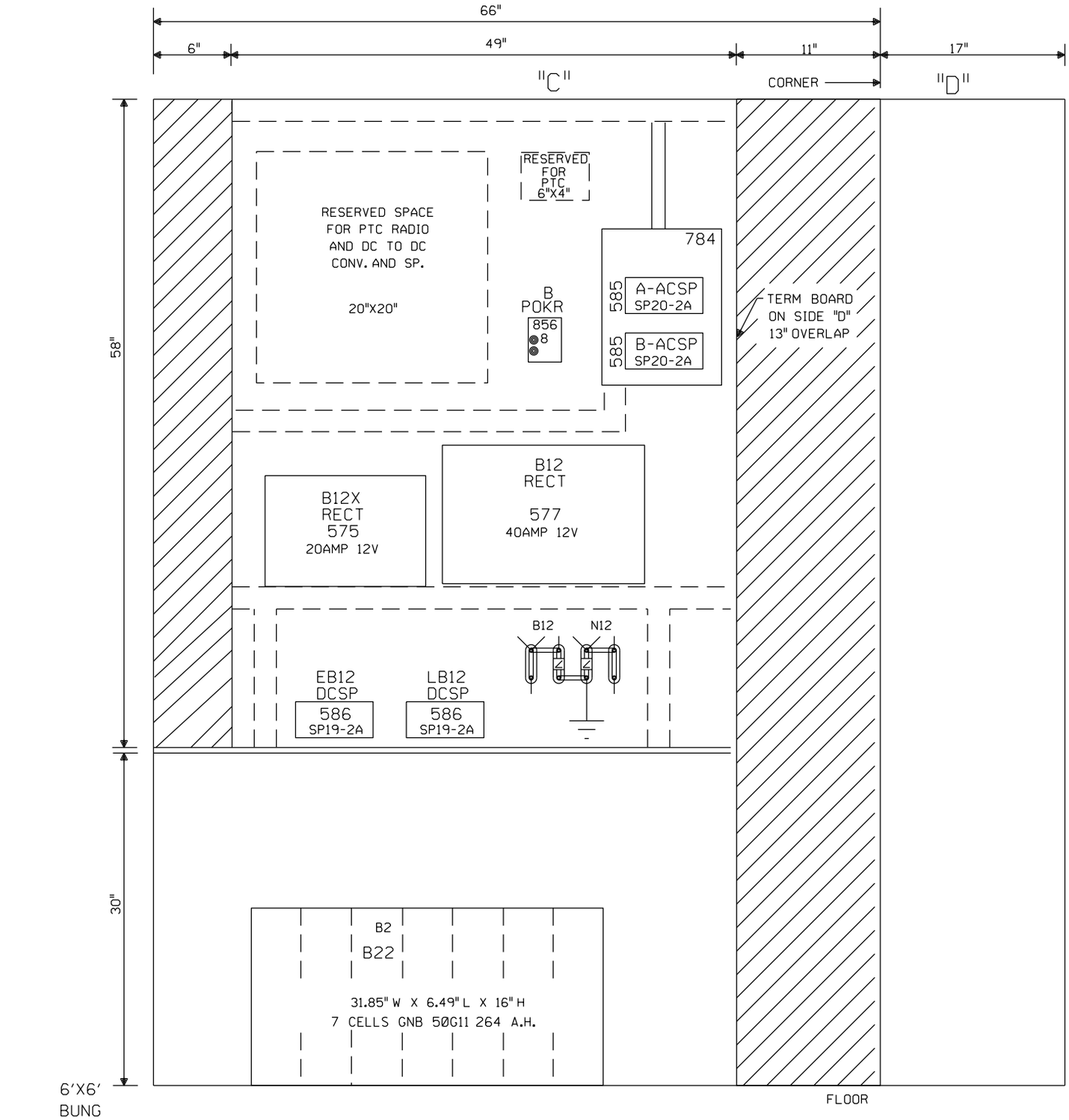


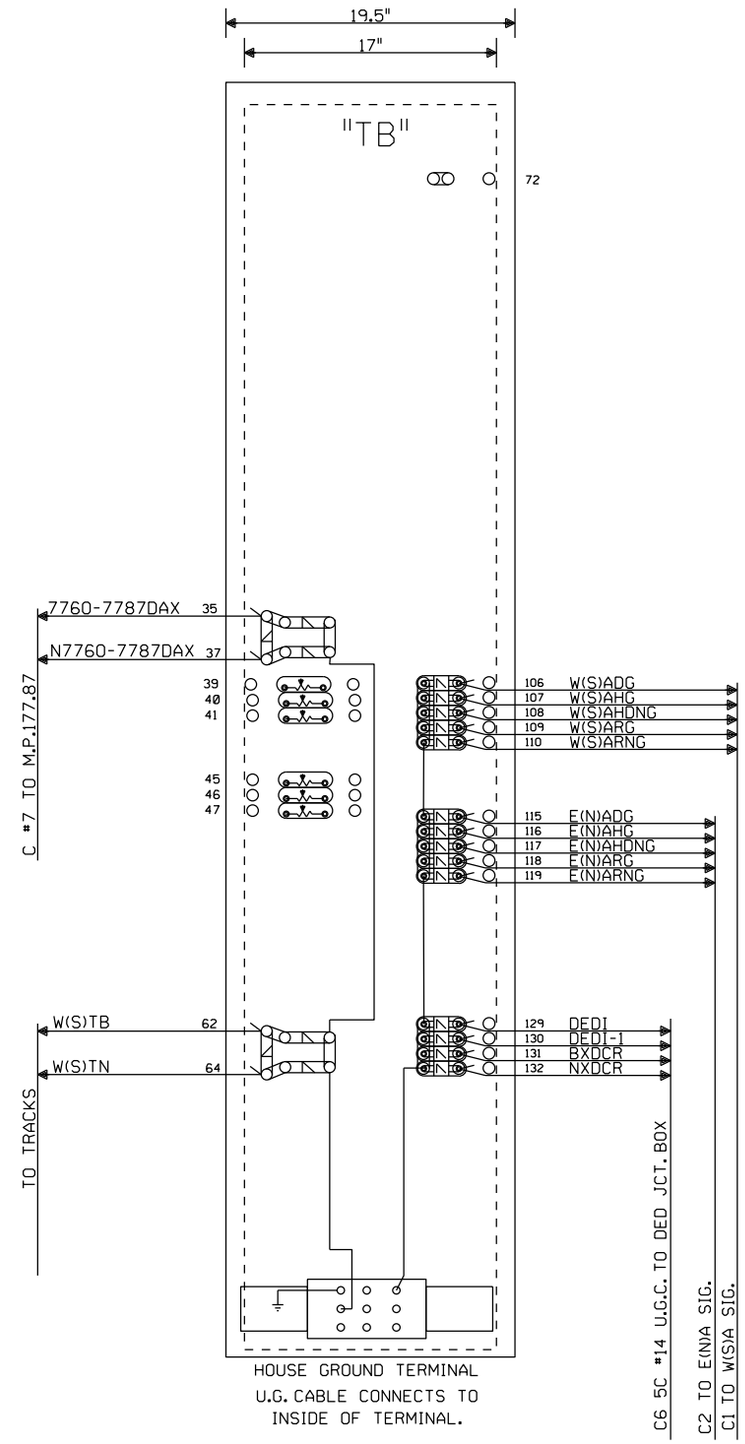


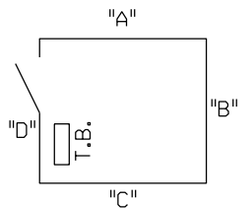


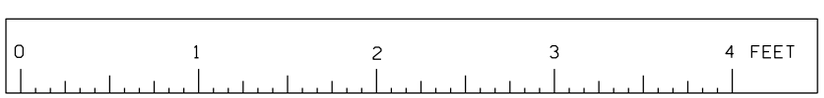


NOTE: ALL DIMENSIONS SHOWN ARE APPROXIMATE.

NEW SHEET

| | | | | | | | | | | | |
|---|---|---|---|---|---|---|---|---|---|---|---|
| | | | | | Designed: 6/01/12 TIER 3 PHASE 2 M.P.194.00 TO M.P.177.00 UPGRADE XINGS TO 4 QUAD WITH EGMS, VARIOUS CP'S Rec#: WO#:14052 IS: / /NST/MJF | MODIFICATION LEVEL | | CIRCUIT MODIFICATIONS ARE NOT TO BE MADE WITHOUT AUTHORITY FROM THE OFFICE OF SIGNAL DESIGN | Date: 06/01/12 | UNION PACIFIC RAILROAD | Sh.: 10 |
| | | | | | | Q. A. LAST LEVEL CHECKED | DU | | Des: NST | | |
| | | | | | | LAST LEVEL MOD THIS TYPICAL | DU | | Chk: | ONE TRACK INTERMEDIATE SPRINGFIELD SUBDIVISION | MP: 177.60 |
| | | | | | | LAST LEVEL BY DESIGNER | DU | | | | |
| | | | | | | CHANGED FROM TYPICAL? | Y | | AFE: 14052 | Office of AVP Engineering-Signal Omaha, Nebraska | ID: CSL17760.10S |
| | | | | | | REV 01.24.11 4K GFC.9 | | | | | |

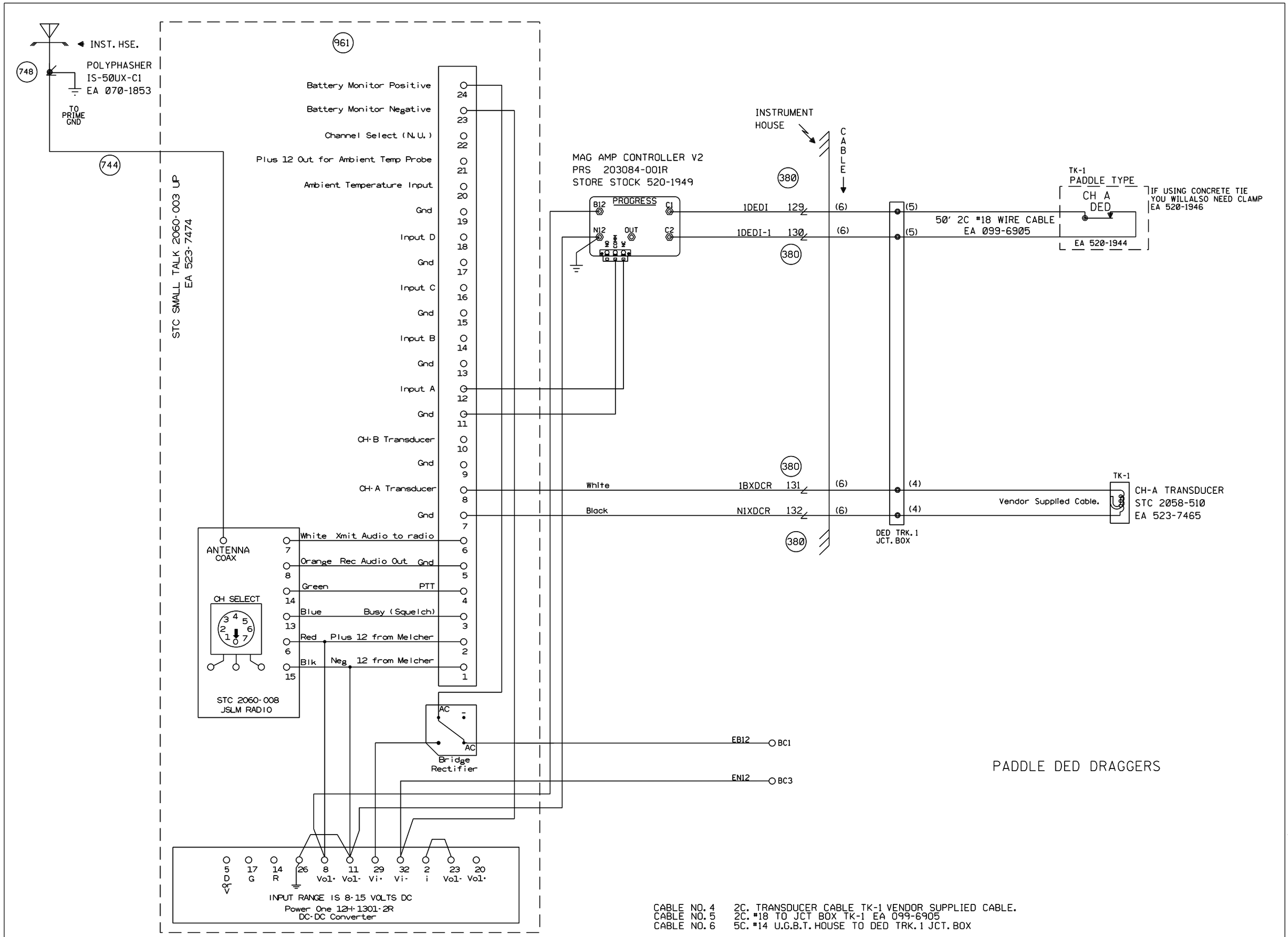


CABLE NO. 4 2C. TRANSDUCER CABLE TK-1 VENDOR SUPPLIED CABLE.
CABLE NO. 5 2C. #18 TO JCT BOX TK-1 EA 099-6905
CABLE NO. 6 5C. #14 U.G.B.T. HOUSE TO DED TRK. 1 JCT. BOX

NEW SHEET

| | | | | | | | | | | | |
|---|---|---|---|---|---|---|---|---|---|---|---|
| | | | | | Designed: 6/01/12<br>TIER 3 PHASE 2<br>M.P.194.00 TO<br>M.P.177.00<br>UPGRADE XINGS TO<br>4 QUAD WITH EGMS,<br>VARIOUS CP'S<br>Rec#: WO#: 14052<br>IS: / /<br>/ /NST/MJF | MODIFICATION LEVEL<br>Q.A. LAST LEVEL CHECKED DU<br>LAST LEVEL MOD THIS TYPICAL DU<br>LAST LEVEL BY DESIGNER DU<br>CHANGED FROM TYPICAL? Y<br>REV 8/20/10 1TMLHBINTU.7 | CIRCUIT MODIFICATIONS ARE NOT TO BE MADE WITHOUT AUTHORITY FROM THE OFFICE OF SIGNAL DESIGN | Date: 06/01/12<br>Des: NST<br>Chk:<br>AFE: 14052 | UNION PACIFIC RAILROAD<br>ONE TRACK INTERMEDIATE<br>SPRINGFIELD SUBDIVISION<br>Office of AVP Engineering-Signal Omaha, Nebraska | Sh.: 11<br>MP: 177.60<br>ID: CSL17760.11S |