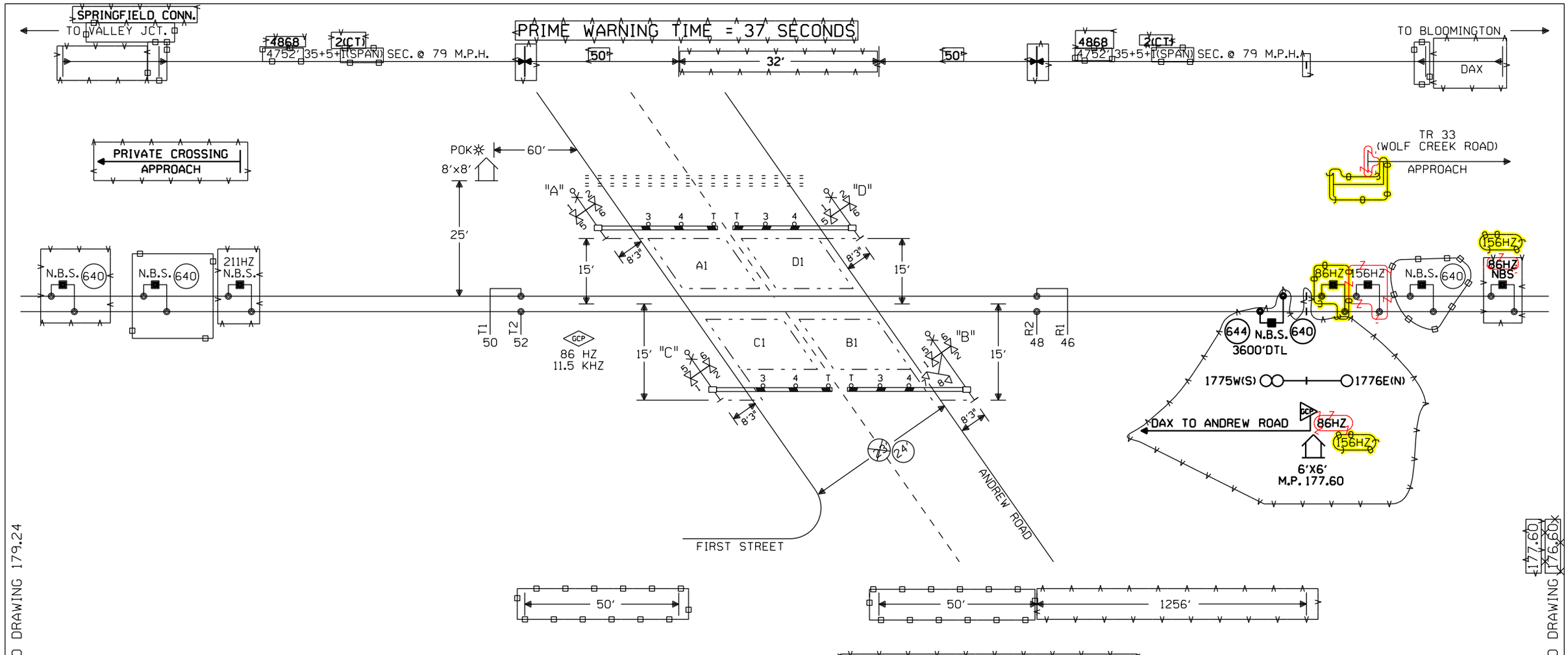


NOTES:

⊗ = TWISTED WIRES
INSULATED 1 TWIST PER FT.
ALL TRACK WIRES 2C. #6

TRANSMITTER AND RECEIVER LEADS TO BE SEPARATED BY AT LEAST 12" IN TRENCH, LENGTHS SHOULD NOT EXCEED MANUFACTURES RECOMMENDATION.

TOP OF FOUNDATION TO BE AT SAME ELEVATION AS THE SURFACE OF THE TRAVELED WAY & NO MORE THAN 4" ABOVE THE SURFACE OF THE GROUND.

ALL BUNGALOW WIRING TO BE #16 AWG FLEX UNLESS OTHERWISE SPECIFIED EXCEPT ALL GROUND WIRE TO BE #6 AWG FLEX OR LARGER.

ALL WIRING IN GATE MECHANISM TO BE #10 "AWG FLEX".

REFER TO UP STANDARD DWG FOR BUNGALOW GROUNDING.

DO NOT USE 7 CELLS OF B12 BATTERY UNLESS REQUIRED TO MAINTAIN MINIMUM LAMP VOLTAGE.

ALL LIGHTS TO BE 12" ROUNDELS.

= = = = = = 4" X 75' CONDUIT

LIGHTS: LED LIGHTS

GATE A,C: 24'
GATE B,D: 24'

CRTU CELLEMETRY

EXIT GATE MANAGEMENT SYSTEM (EGMS) LOOP LOCATION:

1.) 12" FROM CONCRETE CROSSING PANEL. MAY VARY FROM 6" TO 12" DEPENDING ON PAVEMENT QUALITY.
2.) 2' FROM CROSSING CENTERLINE.
3.) 3.5' FROM GATE ARM.
4.) 2' FROM THE EDGE OF THE TRAVELED WAY. MAY BE INCREASED UP TO A MAXIMUM OF 5' WHERE AN IMPROVED SHOULDER OR OTHER EXISTS.
5.) MAXIMUM LOOP WIDTH NOT TO EXCEED 8' AND MINIMUM WIDTH NOT TO BE LESS THAN 3'.

— - - = EGMS LOOP

CONSTRUCTION NOTE:

1. MODIFY GCP PROGRAM FOR UAX INPUT.
2. VERIFY GATE PLACEMENT 8'3" FROM TRAVEL WAY AND 15' FROM CENTERLINE OF TRACK AND RELOCATE IF REQUIRED

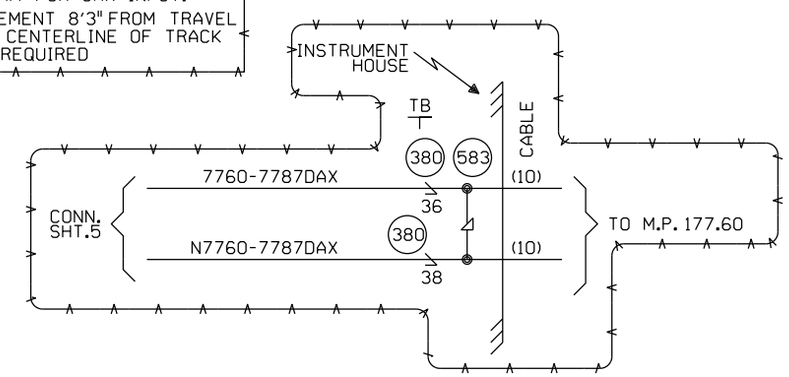


◯ = EXISTING/REVISE ORIGINALS IF A.C.'D

CABLE TABULATION

CABLE #10 7C. NO.14 U.G.B.T. HOUSE TO M.P. 177.60

= IN
= OUT

SHERMAN, ILLINOIS
ANDREW ROAD
M.P. 177.87
SPRINGFIELD SUBDIVISION
D.O.T.#294 281X

THE ONLY CHANGE TO THIS LOCATION IS ON SHEET 1. ALL OTHER SHEETS ARE FOR REFERENCE ONLY.

= IN
= OUT

S ◄—○—► N

•• MAKE TITLE BLOCK CHANGES TO ALL SHEETS ••

| | | | |
|---|---|---|---|
| Date: 04/01/02 | UNION PACIFIC RAILROAD | Sh.: 1 | |
| Des: WIT | SHERMAN, ILLINOIS | DOT 294281X | |
| Chk: JJF | ANDREW ROAD | MP: 177.87 | |
| AFE: 00813 | SPRINGFIELD SUBDIVISION | ID: CSL17787.1X | |
| DES: WITT.IND. | Office of AVP Engineering-Signal Omaha, Nebraska | DATE 04-02 | |
| DIG: WITT.IND. | UNION PACIFIC RAILROAD | SHEET 1 | |
| CHK: J.J.F. | BLOOMINGTON, ILLINOIS TO | DWG 177.87 | |
| A.F.E. 00183 | VALLEY JCT., ILLINOIS | RTE=CSL | |
| ID= CSL17787.1X | C.T.C. CIRCUITS | | |
| | Office of AVP Engineering-Signal OMAHA NEBR. | | |

Designed: 08/21/12
TIER 3 PHASE 3
M.P.177.00 TO M.P.160.00
UPGRADE XINGS AND CP'S FOR HIGH SPEED RAIL
Rec#: WO#: 22820
IS: /MWK /NST/MJF

Designed: 6/01/12
TIER 3 PHASE 2
M.P.194.00 TO M.P.177.00
UPGRADE XINGS TO 4 QUAD WITH EGMS, VARIOUS CP'S
Rec#: WO#: 14052
IS: / /NST/MJF

REV. 6-20-08
UPGRADED CROSSING PROTECTION FOR THE HIGH SPEED RAIL PROJ. FROM MAZONIA TO SPRINGFIELD
W.O. # 00183
REC. #15265
4-8-06 JJF
JR/WITT/WITT/JNM

| MODIFICATION LEVEL | |
|---|---|
| Q.A. LAST LEVEL CHK'D. | DA |
| LAST LEVEL MOD. THIS TYP. | CZ |
| LAST LEVEL BY DESIGNER. | DD |
| CHANGED FROM TYP.? Y/N | Y |

CIRCUIT MODIFICATIONS ARE NOT TO BE MADE WITHOUT AUTHORITY FROM THE OFFICE OF SIGNAL DESIGN

(REV. 7-9-00 ) (1TKBG.1 )

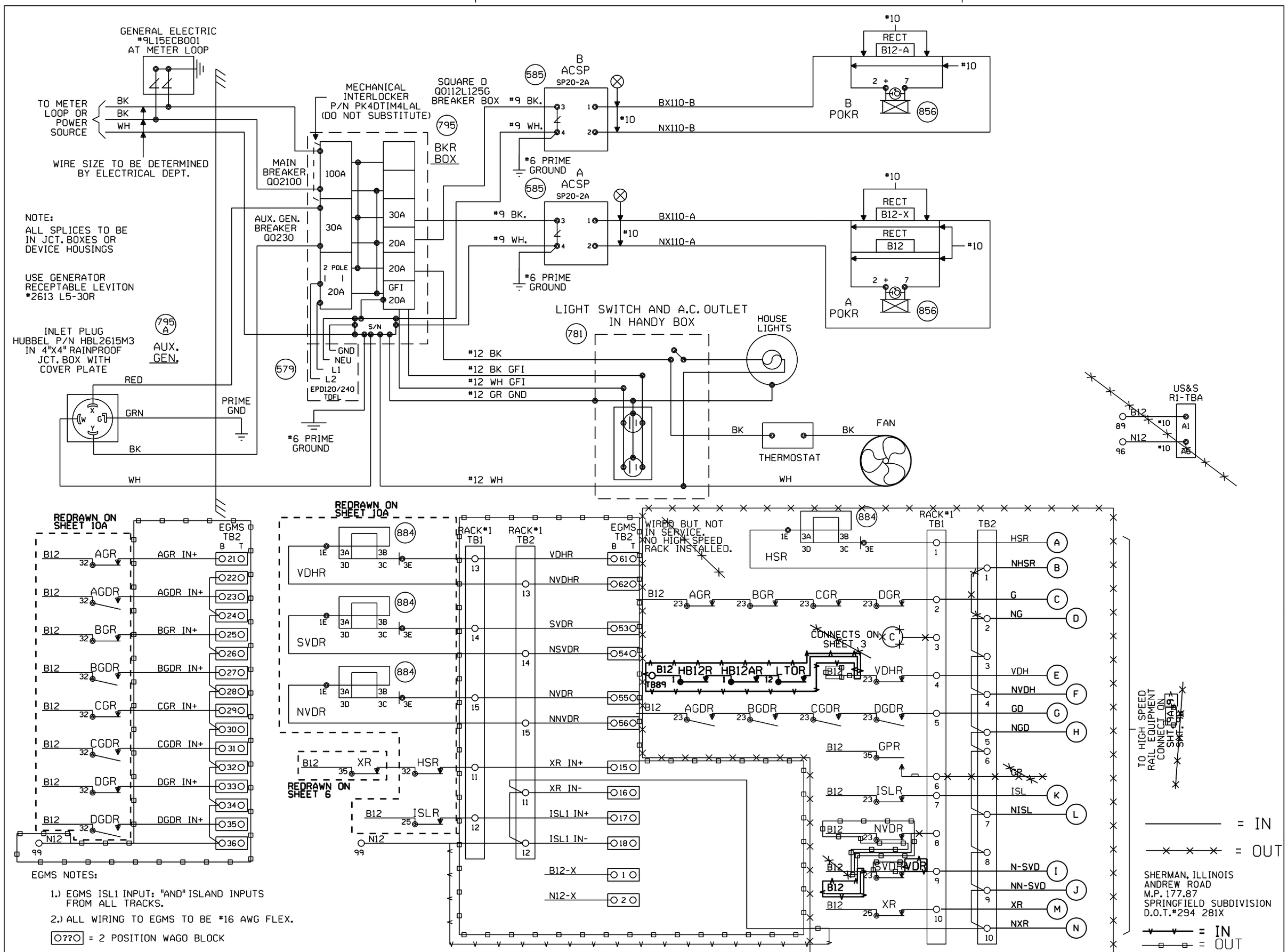


EGMS NOTES:

1.) EGMS ISL1 INPUT: "AND" ISLAND INPUTS FROM ALL TRACKS.

2.) ALL WIRING TO EGMS TO BE #16 AWG FLEX.

O??O = 2 POSITION WAGO BLOCK

| | | | | | | | | |
|---|---|---|---|---|---|---|---|---|
| Designed: 6/01/12 TIER 3 PHASE 2 M.P.194.00 TO M.P.177.00 UPGRADE XINGS TO 4 QUAD WITH EGMS, VARIOUS CP'S Rec#: WO#: 14052 IS: NST/MJF | 02-24-09 INSTALL MONITOR RACK FOR XINGS W.O. 87933 MAS | REV. 6-20-08 UPGRADED CROSSING PROTECTION FOR THE HIGH SPEED RAIL PROJ. FROM MAZONIA TO SPRINGFIELD W.O. # 00183 REC. #15265 4-8-06 JJF JR/WITT/WITT/JNM | MODIFICATION LEVEL | | CIRCUIT MODIFICATIONS ARE NOT TO BE MADE WITHOUT AUTHORITY FROM THE OFFICE OF SIGNAL DESIGN | DES: WITT.IND. DIG: WITT.IND. CHK: J.J.F. A.F.E. 00183 ID= CSL17787.2X | UNION PACIFIC RAILROAD BLOOMINGTON, ILLINOIS TO VALLEY JCT., ILLINOIS C.T.C. CIRCUITS Office of AVP Engineering-Signal OMAHA NEBR. | DATE 4-1-02 SHEET 2 DWG 177.87 RTE-CSL |
| | | | Q.A. LAST LEVEL CHK'D. | DA | | | | |
| | | | LAST LEVEL MOD. THIS TYP. | CZ | | | | |
| | | | LAST LEVEL BY DESIGNER. | DD | | | | |
| | | | CHANGED FROM TYP.? Y/N | Y | | | | |

(REV. 7-9-00) (HCA4G.2 )

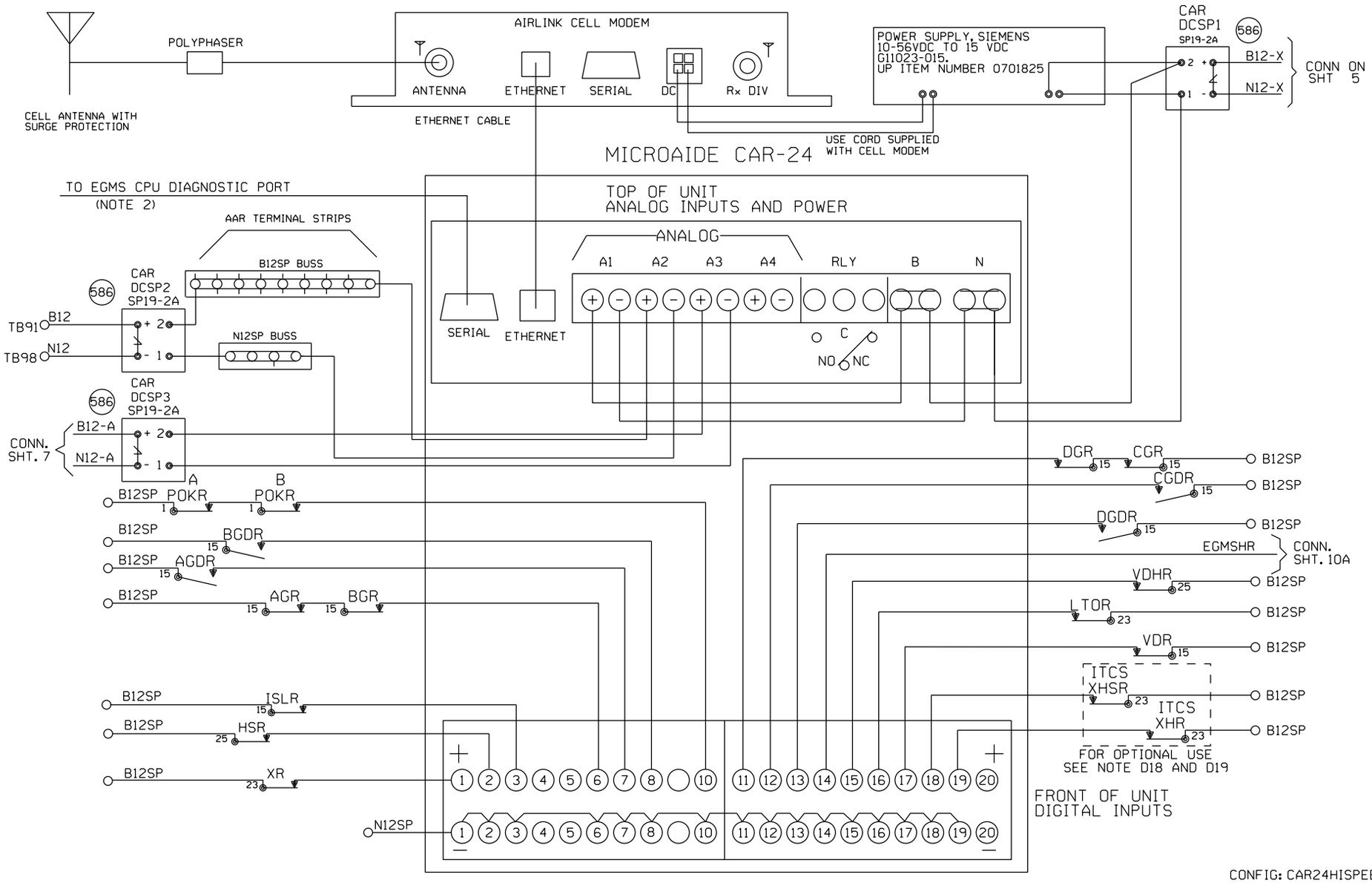


NOTE:
1) DO NOT JUMPER UNUSED INPUTS UNLESS OTHERWISE NOTED
2) THE CAR24 SERIAL PORT IS AVAILABLE TO ADD REMOTE CONNECTIVITY TO EXISTING LOGGING EQUIPMENT. USE NULL MODEM CABLE WITH SHIELDING DISCONNECTED AT ONE OR BOTH SIDES.

ANALOG INPUTS:
A1) B12X BATTERY BANK
A2) B12 BATTERY BANK
A3) B12A BATTERY BANK
A4) BATTERY BANK 4

DIGITAL INPUTS
D1) XR
D2) HSR
D3) ISLAND 1
D4) ISLAND 2
D5) ISLAND 3
D6) GATE UP INDICATION
D7) GATE DOWN INDICATION 1
D8) GATE DOWN INDICATION 2
D9)
D10) POR
D11) Exit Gate Up Indication
D12) Exit Gate Down Indication 1
D13) Exit Gate Down Indication 2
D14) EGMSHR - EGMS Overall System Health Output
D15) VDHR - EGMS Loop Health Output
D16) LTOR - EGMS Long-Term Obstacle
D17) VDR - EGMS Vehicle Detect Relay
D18) ITCS High Speed Start Health - XHSR. Jumper to B12SP if unused.
D19) ITCS Health - XHR. Jumper to B12SP if unused.

CONFIG: CAR24HISPEED

| Alarm Name | Alarm Code | Clearing Code | Alarm Conditions | Alarm Clearing Conditions | Cleared by Maintainer Mode? |
|---|---|---|---|---|---|
| AC Power Off 30 Minutes | IP | PR | POR input low for 30 minutes. | POR input high for 5 minutes. | No |
| AC Power Off 2 Hours | PK | PR | POR input low for 2 Hours. | POR input high for 5 minutes. | No |
| Battery Bank #1 Out of Range | B1 | 1B | Battery 1 below 81% or above 120% of the calibrated value for 5 minutes. | Battery 1 within acceptable range for 5 minutes. | No |
| Battery Bank #2 Out of Range | B2 | 2B | Battery 2 below 81% or above 120% of the calibrated value for 5 minutes. | Battery 2 within acceptable range for 5 minutes. | No |
| Battery Bank #3 Out of Range | B3 | 3B | Battery 3 below 81% or above 120% of the calibrated value for 5 minutes. | Battery 3 within acceptable range for 5 minutes. | No |
| Battery Bank #4 Out of Range | B4 | 4B | Battery 4 below 81% or above 120% of the calibrated value for 5 minutes. | Battery 4 within acceptable range for 5 minutes. | No |
| Xing Activation over 5 Min - High Speed | LH | CL | XR input low for 5 minutes. | XR input high for 10 seconds. | Yes |
| Gate Not Up Properly | GU | GC | Gate Up indication is low and XR is high for 3 minutes. | Gate Up indication is high and XR is high for 2 seconds. | Yes |
| Gate Not Down Properly | GD | GC | Gate Down indication(s) is low and XR is low for 45 seconds. | Gate Down indication(s) is high and XR is low for 2 seconds. | Yes |
| EGMS Health Alarm | EH | HE | EGMS Overall System Health alarm low for 1 minute. | EGMS Overall System Health alarm high for 5 seconds. | No |
| EGMS Loop Health Alarm | EL | LE | EGMS Loop Health alarm low for 1 minute. | EGMS Loop Health alarm high for 5 seconds. | No |
| EGMS Long Term Obstacle Alarm | ET | TE | EGMS Long Term Obstacle alarm low for 1 minute. | EGMS Long Term Obstacle alarm high for 5 seconds. | No |
| ITCS Health Alarm | IH | HI | ITCS XHR or XHSR output low for 1 minute. | ITCS XHR output high for 5 seconds. | No |

**NEW SHEET**

Designed: 6/01/12
TIER 3 PHASE 2
M.P.194.00 TO M.P.177.00
UPGRADE XINGS TO 4 QUAD WITH EGMS, VARIOUS CP'S
Rec#: WO#: 14052
IS: / /
/ /NST/MJF

| MODIFICATION LEVEL | |
|---|---|
| O.A. LAST LEVEL CHECKED | DU |
| LAST LEVEL MOD THIS TYPICAL | DU |
| LAST LEVEL BY DESIGNER | DU |
| CHANGED FROM TYPICAL? | Y |

REV 01.24.11 4K ACDCCAR24.3

CIRCUIT MODIFICATIONS ARE NOT TO BE MADE WITHOUT AUTHORITY FROM THE OFFICE OF SIGNAL DESIGN

Date: 06-01-12
Des: NST
Chk:
AFE: 14052

**UNION PACIFIC RAILROAD**
SHERMAN, ILLINOIS
ANDREW ROAD
SPRINGFIELD SUBDIVISION
Office of AVP Engineering-Signal Omaha, Nebraska

Sh.: 3
DOT 294281X
MP: 177.87
ID: CSL17787.3X

LEFT

TOP

775

## VOLTAGE MONITOR 520603-2V150A

RAILWAY EQUIPMENT CO.
MPLS, MN 763-972-2200

| | | | |
|---|---|---|---|
| PASSWORD | | | The Password to adjust parameters is 5. |
| MAX VCH1 | SET | ---- . --- | High voltage setpoint for channel one. |
| LOW VCH1 | SET | ---- . --- | Low voltage setpoint for channel one. |
| DELAY CH1 | SET | --------- | Delay time in sec. before a fault is set for ch. one. |
| MAX VCH2 | SET | ---- . --- | High voltage setpoint for channel two. |
| LOW VCH2 | SET | ---- . --- | Low voltage setpoint for channel two. |
| HIGH AMP | SET | --------- | High current setpoint for channel two. |
| LOW AMP | SET | --------- | Low current setpoint for channel two. |
| HIGH TEMP | SET | --------- | High temp. setpoint for channel two. |
| LOW TEMP | SET | --------- | Low temp. setpoint for channel two. |
| DELAY CH2 | SET | --------- | Delay time in sec. before a fault is set for ch. two. |

MENU OPERATION: Depressing the MODE button will move through all screens. Depressing the INCREASE or DECREASE button will increase or decrease the desired value

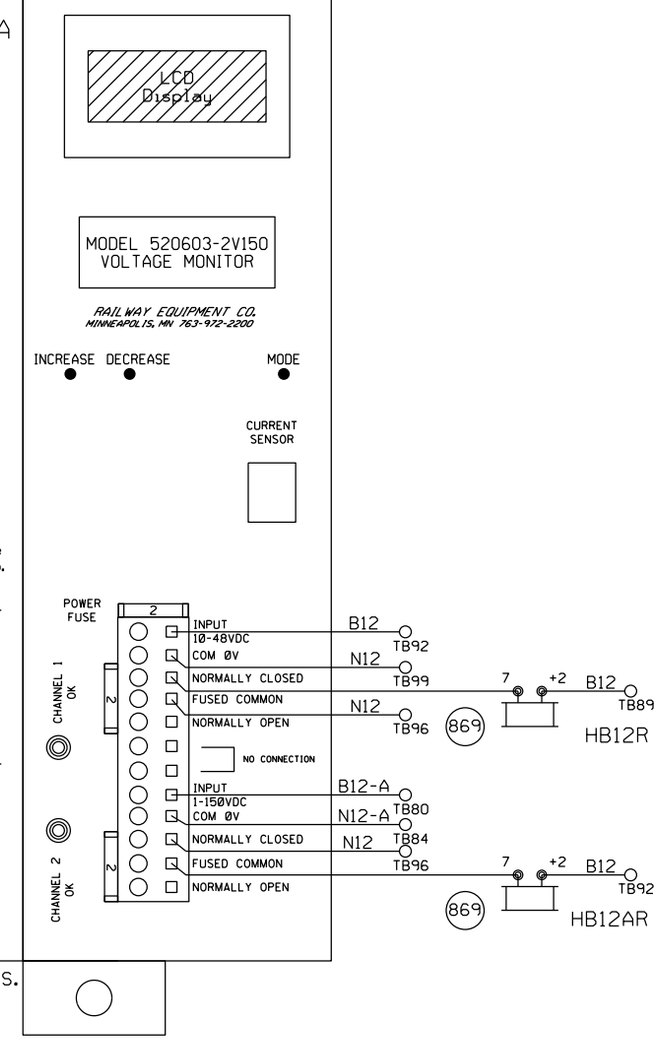


LOW VOLTAGE SETPOINT IS TO BE SET AT 11 VOLTS.

NEW SHEET

Designed: 6/01/12
TIER 3 PHASE 2
M.P.194.00 TO
M.P.177.00
UPGRADE XINGS TO
4 QUAD WITH EGMS,
VARIOUS CP'S
Rec#: WO#: 14052
IS: / /
/NST/MJF

| MODIFICATION LEVEL | |
|---|---|
| O. A. LAST LEVEL CHECKED | DU |
| LAST LEVEL MOD THIS TYPICAL | DU |
| LAST LEVEL BY DESIGNER | DU |
| CHANGED FROM TYPICAL? | Y |
| REV 01.24.11 4K 2TKEGMS.4 | |

CIRCUIT MODIFICATIONS ARE NOT TO BE MADE WITHOUT AUTHORITY FROM THE OFFICE OF SIGNAL DESIGN

Date: 06-01-12
Des: NST
Chk:
AFE: 14052

**UNION PACIFIC RAILROAD**

SHERMAN, ILLINOIS
ANDREW ROAD
SPRINGFIELD SUBDIVISION

Office of AVP Engineering-Signal Omaha, Nebraska

Sh.: 4
DOT 294 281X
MP: 177.87
ID: CSL17787.4X

NOTE:

THIS DRAWING WAS DESIGNED FOR A SPECIFIC APPLICATION. IF A MODIFICATION OR REDESIGN OF THIS DRAWING CAUSES ANY MODULES TO CHANGE, THE UNIT'S PART NUMBER MUST BE CHANGED TO CORRESPOND ACCORDINGLY.

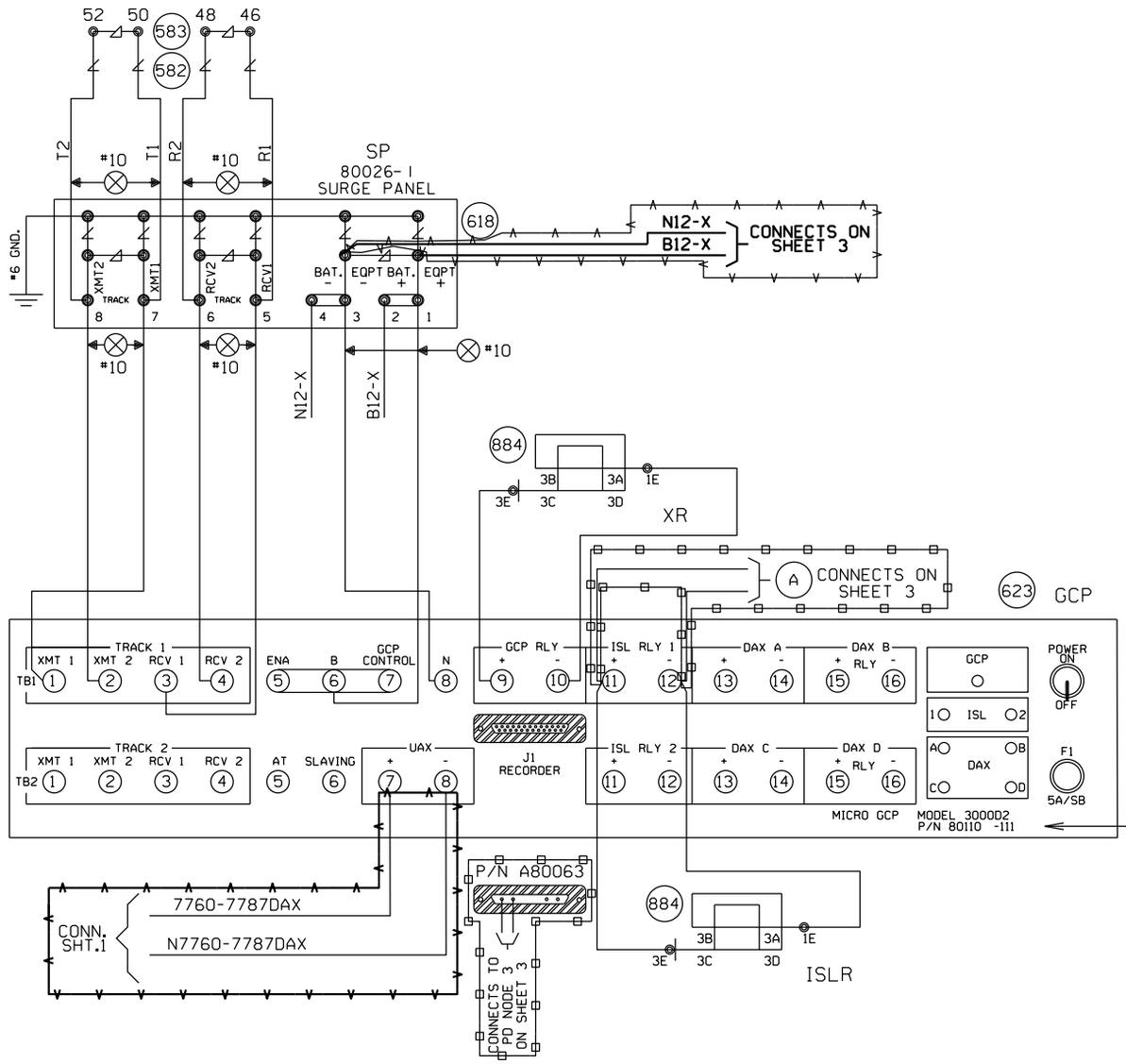


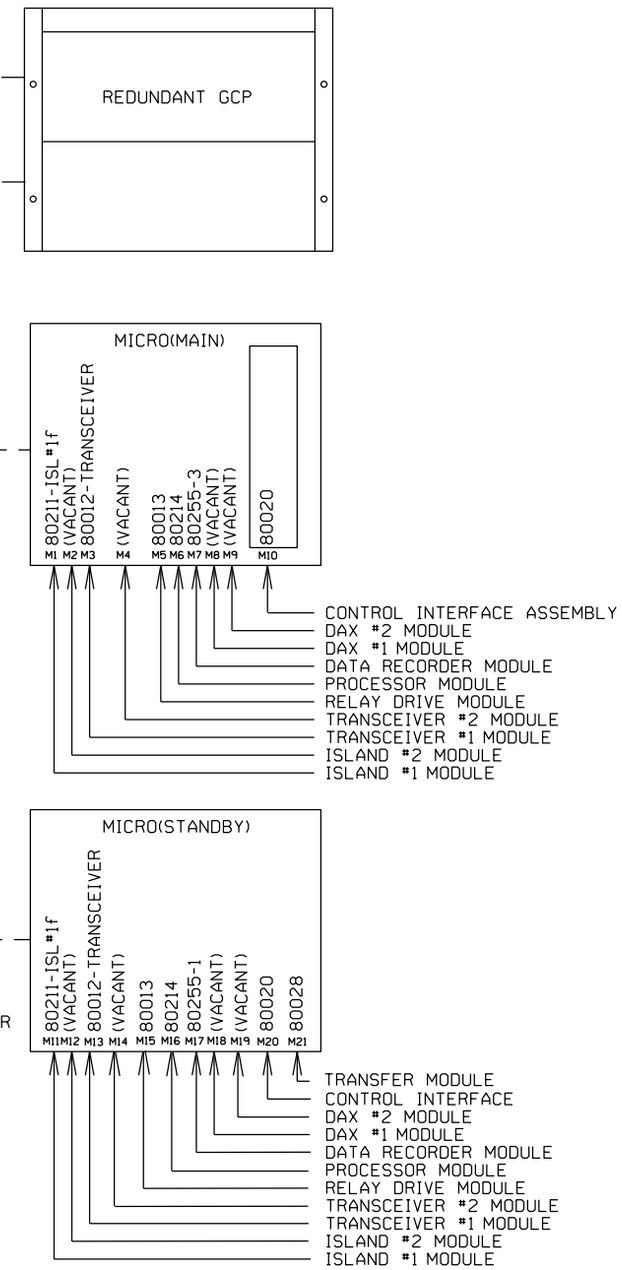


NOTE:

EACH TRANSMITTER TO RAIL WIRE FROM TB1-1 AND TB1-2 MUST NOT EXCEED THE MAXIMUM LENGTH SPECIFIED IN THE TABLE SHOWN BELOW. THE RECEIVER WIRE LENGTH IS NOT CRITICAL. DOES NOT APPLY TO 6 TRACK WIRE APPLICATION.

| "Mf" FREQUENCY (HZ) | MAXIMUM TRANSMIT WIRE LENGTH (FEET) |
|---|---|
| 86 | 100 |
| 114 | 125 |
| 156 | 150 |
| 211 | 200 |
| 285-970 | 250 |

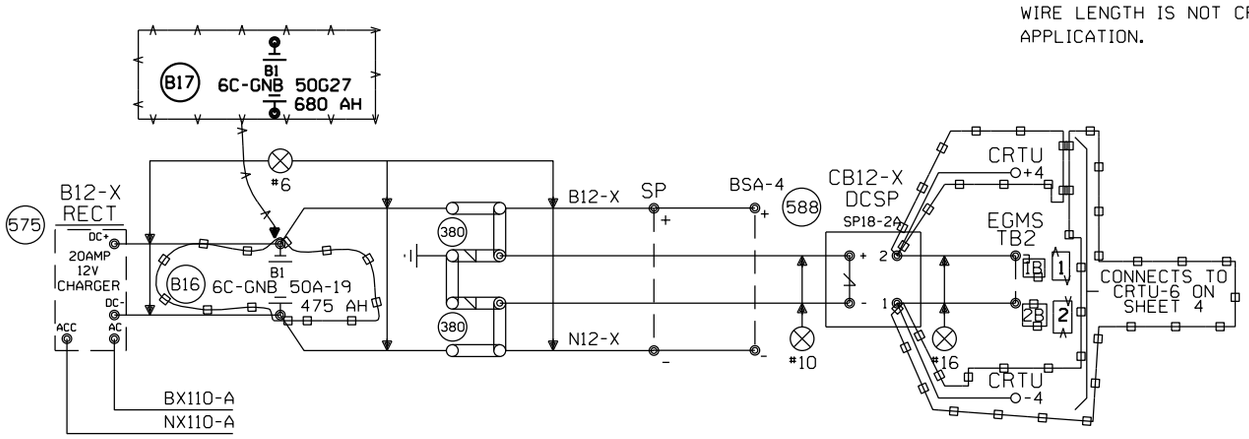


= IN

= OUT

= IN

= OUT

SHERMAN, ILLINOIS
ANDREW ROAD
M.P. 177.87
SPRINGFIELD SUBDIVISION
D.O.T.#294 281X

Designed: 6/01/12
TIER 3 PHASE 2
M.P.194.00 TO
M.P.177.00
UPGRADE XINGS TO
4 QUAD WITH EGMS,
VARIOUS CP'S
Rec#: WO#: 14052
IS: /
/NST/MJF

02-24-09
INSTALL MONITOR RACK FOR XINGS
W.O. 87933 MAS

REV. 6-20-08
UPGRADED CROSSING PROTECTION FOR THE HIGH SPEED RAIL PROJ. FROM MAZONIA TO SPRINGFIELD
W.O. # 00183
REC. #15265
4-8-06 JJF
JR/WITT/WITT/JNM

| MODIFICATION LEVEL | |
|---|---|
| Q.A. LAST LEVEL CHK'D. | DA |
| LAST LEVEL MOD. THIS TYP. | CZ |
| LAST LEVEL BY DESIGNER. | DD |
| CHANGED FROM TYP.? Y/N | Y |

CIRCUIT MODIFICATIONS ARE NOT TO BE MADE WITHOUT AUTHORITY FROM THE OFFICE OF SIGNAL DESIGN

DES: WITT.IND.
DIG: WITT.IND.
CHK: J.J.F.
A.F.E. 00183
ID= CSL17787.5X

UNION PACIFIC RAILROAD
BLOOMINGTON, ILLINOIS TO
VALLEY JCT., ILLINOIS
C.T.C. CIRCUITS
Office of AVP Engineering-Signal OMAHA NEBR.

DATE 4-1-02
SHEET 5
DWG 177.87
RTE-CSL

(REV. 7-9-00 ) (3K1TKBG.DGN)

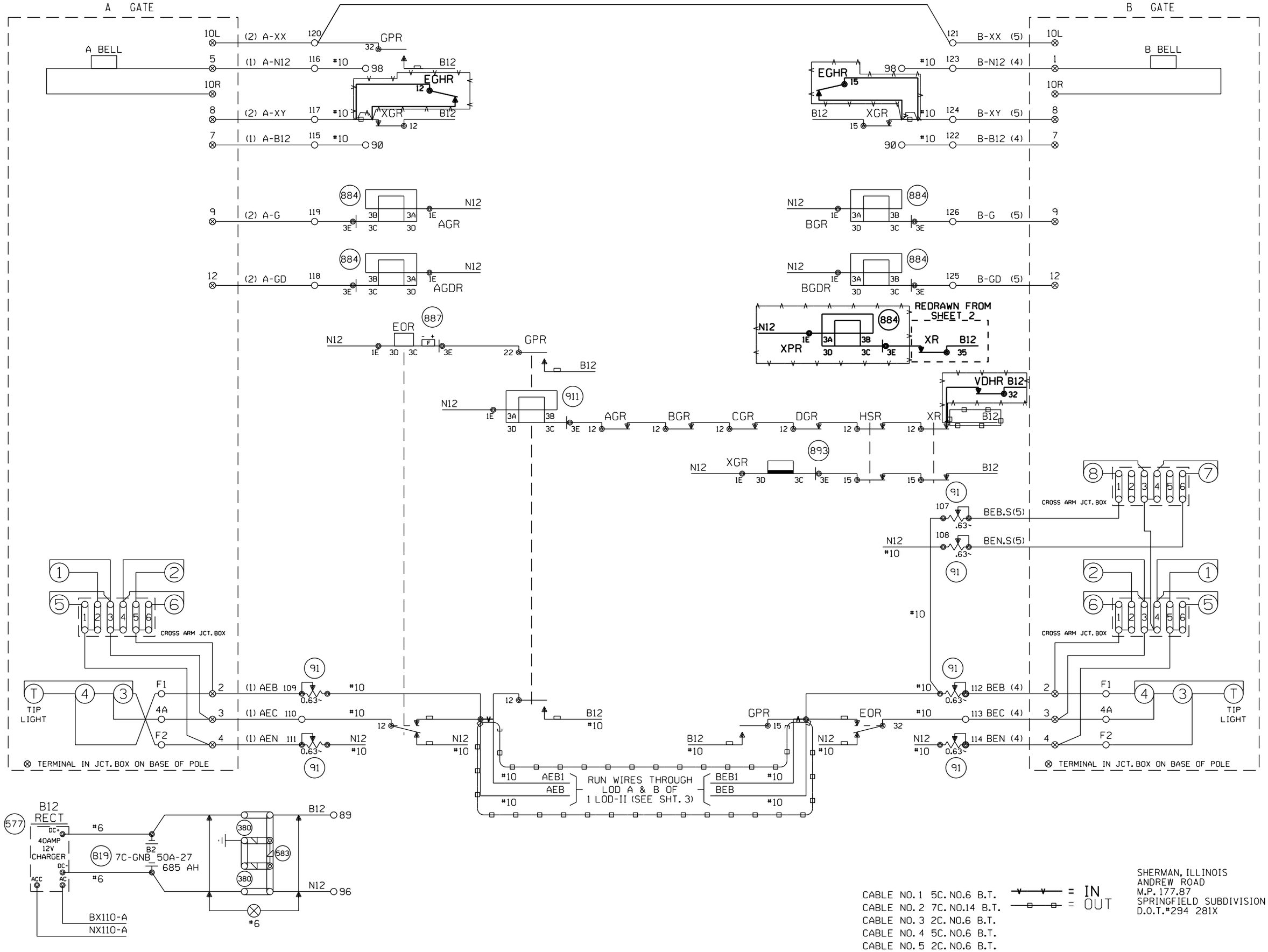


Designed: 6/01/12
TIER 3 PHASE 2
M.P.194.00 TO
M.P.177.00
UPGRADE XINGS TO
4 QUAD WITH EGMS,
VARIOUS CP'S
Rec#: WO#: 14052
IS: / /NST/MJF

REV. 6-20-08
UPGRADED CROSSING
PROTECTION FOR THE
HIGH SPEED RAIL
PROJ. FROM MAZONIA
TO SPRINGFIELD
W.O. # 00183
REC. #15265
4-8-06 JJF
JR/WITT/WITT/JNM

| MODIFICATION LEVEL | |
|---|---|
| Q.A. LAST LEVEL CHK'D. | DA |
| LAST LEVEL MOD. THIS TYP. | CZ |
| LAST LEVEL BY DESIGNER. | DD |
| CHANGED FROM TYP.? Y/N | Y |

CIRCUIT MODIFICATIONS ARE NOT TO BE MADE WITHOUT AUTHORITY FROM THE OFFICE OF SIGNAL DESIGN

DES: WITT.IND.
DIG: WITT.IND.
CHK: J.J.F.
A.F.E. 00183
ID= CSL17787.6X

# UNION PACIFIC RAILROAD BLOOMINGTON, ILLINOIS TO VALLEY JCT., ILLINOIS C.T.C. CIRCUITS

Office of AVP Engineering-Signal OMAHA NEBR.

DATE 4-1-02
SHEET 6
DWG 177.87
RTE-CSL

(REV. 7-9-00) (4GTYP.5)

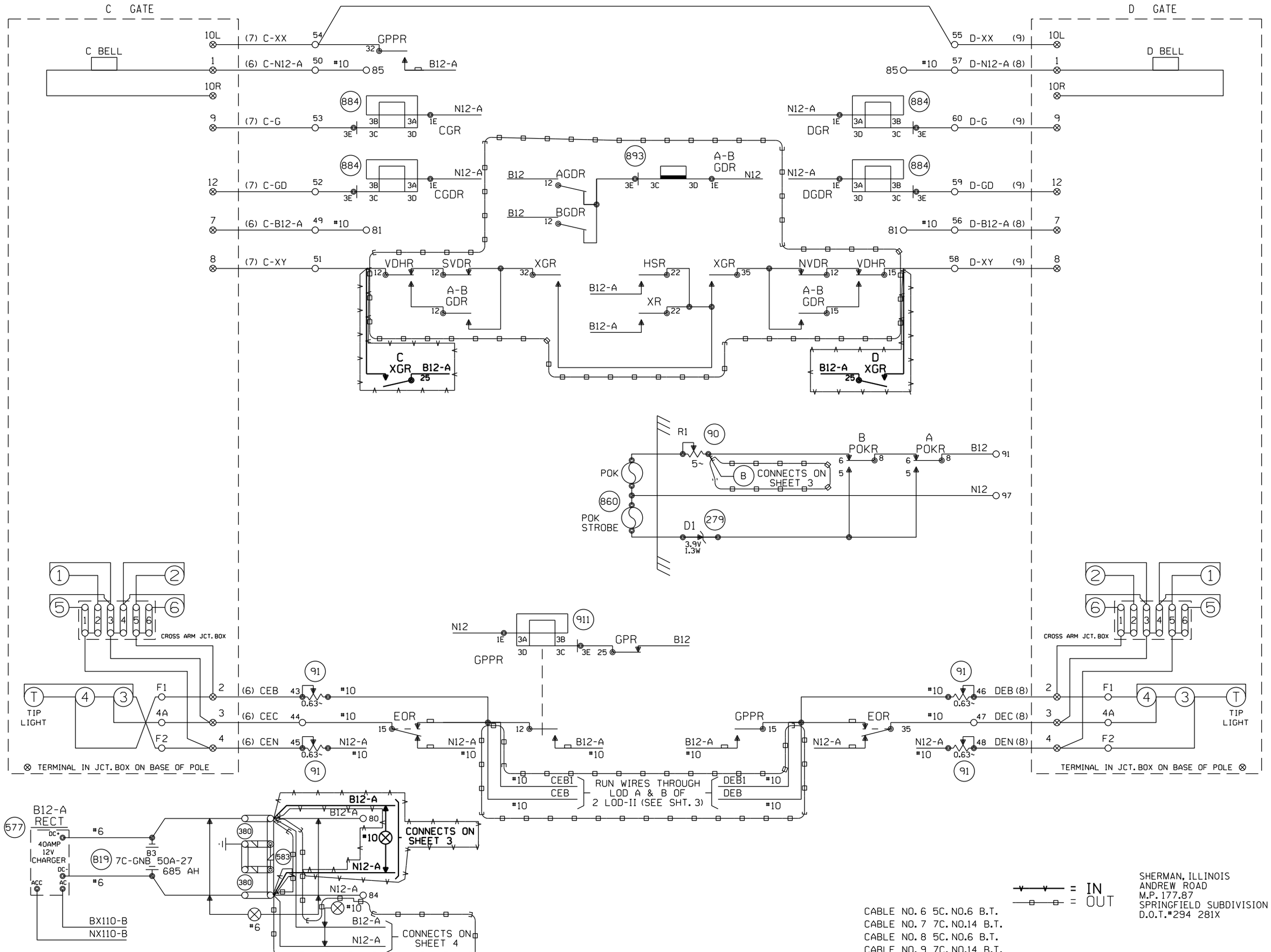


Designed: 6/01/12
TIER 3 PHASE 2
M.P.194.00 TO
M.P.177.00
UPGRADE XINGS TO
4 QUAD WITH EGMS,
VARIOUS CP'S
Rec#: WO#: 14052
IS: /NST/MJF

REV. 6-20-08
UPGRADED CROSSING
PROTECTION FOR THE
HIGH SPEED RAIL
PROJ. FROM MAZONIA
TO SPRINGFIELD
W.O. # 00183
REC. #15265
4-8-06 JJF
JR/WITT/WITT/JNM

| MODIFICATION LEVEL | |
|---|---|
| Q.A. LAST LEVEL CHK'D. | DA |
| LAST LEVEL MOD. THIS TYP. | CZ |
| LAST LEVEL BY DESIGNER. | DD |
| CHANGED FROM TYP.? Y/N | Y |

CIRCUIT MODIFICATIONS ARE NOT TO BE MADE WITHOUT AUTHORITY FROM THE OFFICE OF SIGNAL DESIGN

DES: WITT.IND.
DIG: WITT.IND.
CHK: J.J.F.
A.F.E. 00183
ID= CSL17787.7X

UNION PACIFIC RAILROAD
BLOOMINGTON, ILLINOIS TO
VALLEY JCT., ILLINOIS
C.T.C. CIRCUITS
Office of AVP Engineering-Signal OMAHA NEBR.

DATE 4-1-02
SHEET 7
DWG 177.87
RTE-CSL

(REV. 7-9-00) (4GTYP.6)

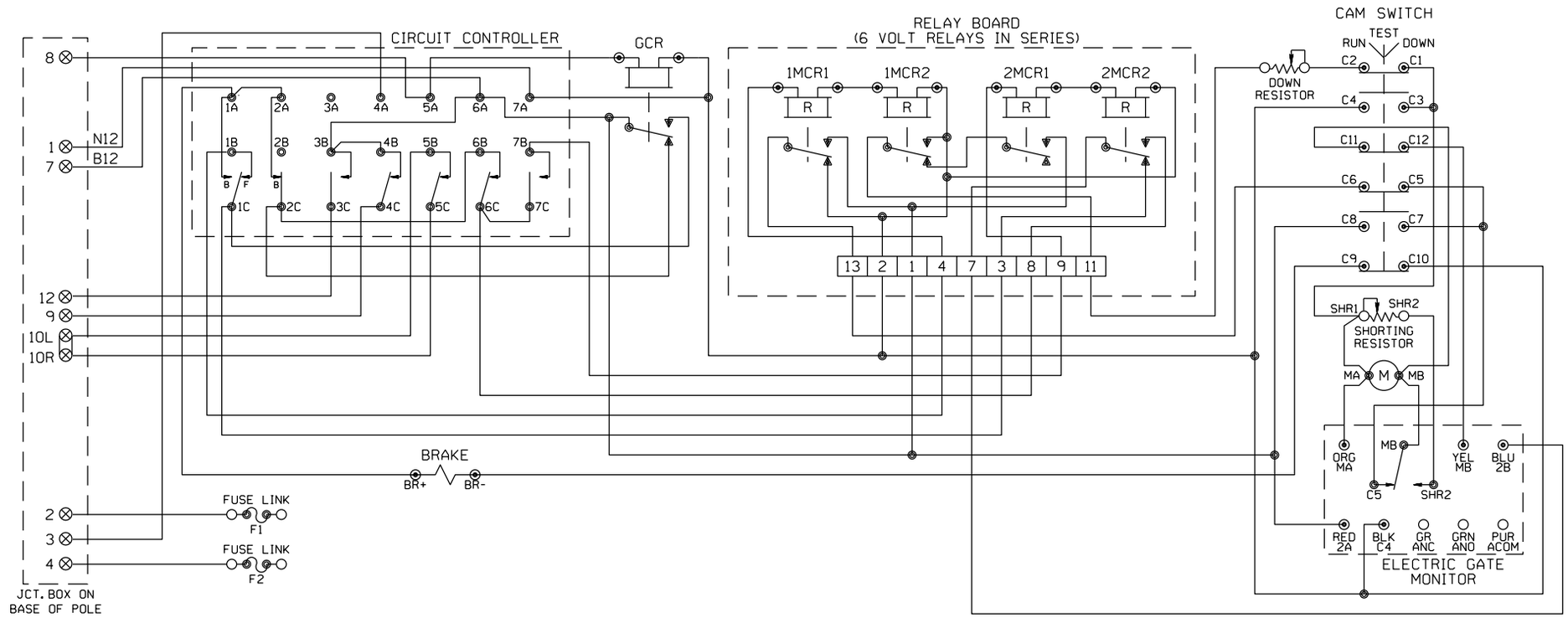


FOR WIRING GATES "C" AND "D"

## WCH 3597 EXIT GATE

| CONTACT | CLOSED | FUNCTION |
|---|---|---|
| 1F | 90-2 | POWER DOWN |
| 1B | 2-0 | ENGAGE BRAKE DOWN |
| 2B | 86-90 | ENGAGE BRAKE UP |
| 3 | 0-10 | GATE DOWN |
| 4 | 82-90 | GATE CLEAR |
| 5 | 10-90 | BELL |
| 6 | 60-90 | POWER UP |
| 7 | 0-75 | DROP POWER UP |

MECHANISM SHOWN IN CLEAR POSITION

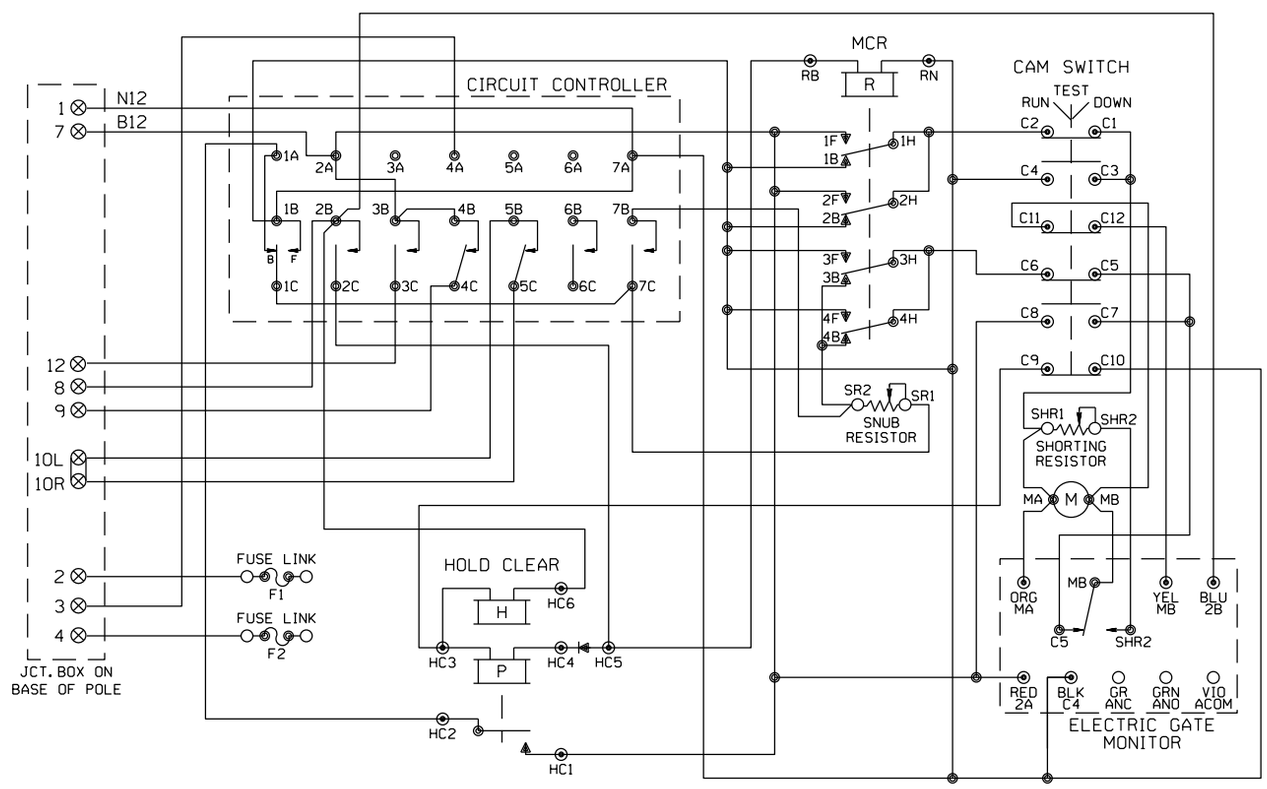


FOR WIRING GATES "A" AND "B"

## WCH 3597 ENTRANCE GATE

| CONTACT | CLOSED | FUNCTION |
|---|---|---|
| 1B | 75-90 | POWER DOWN |
| 1F | 0-70 | SNUB DOWN |
| 2 | 0-86 | POWER UP |
| 3 | 0-10 | GATE DOWN |
| 4 | 82-90 | GATE CLEAR |
| 5 | 10-90 | BELL |
| 6 | SPARE | SPARE |
| 7 | 0-10 | SNUB |

MECHANISM SHOWN IN CLEAR POSITION

SHERMAN, ILLINOIS
ANDREW ROAD
M.P. 177.87
SPRINGFIELD SUBDIVISION
D.O.T.#294 281X

REV. 6-20-08
UPGRADED CROSSING PROTECTION FOR THE HIGH SPEED RAIL PROJ. FROM MAZONIA TO SPRINGFIELD
W.O. # 00183
REC. #15265
4-8-06 JJF
JR/WITT/WITT/JNM

| MODIFICATION LEVEL | |
|---|---|
| Q.A. LAST LEVEL CHK'D. | DA |
| LAST LEVEL MOD. THIS TYP. | CZ |
| LAST LEVEL BY DESIGNER. | DD |
| CHANGED FROM TYP.? Y/N | Y |

CIRCUIT MODIFICATIONS ARE NOT TO BE MADE WITHOUT AUTHORITY FROM THE OFFICE OF SIGNAL DESIGN

DES: WITT.IND.
DIG: WITT.IND.
CHK: J.J.F.
A.F.E. 00183
ID= CSL17787.8X

UNION PACIFIC RAILROAD
BLOOMINGTON, ILLINOIS TO VALLEY JCT., ILLINOIS
C.T.C. CIRCUITS
Office of AVP Engineering-Signal OMAHA NEBR.

DATE 4-1-02
SHEET 8
DWG 177.87
RTE-CSL

(REV. 7-9-00 ) (GWIRING.DGN )

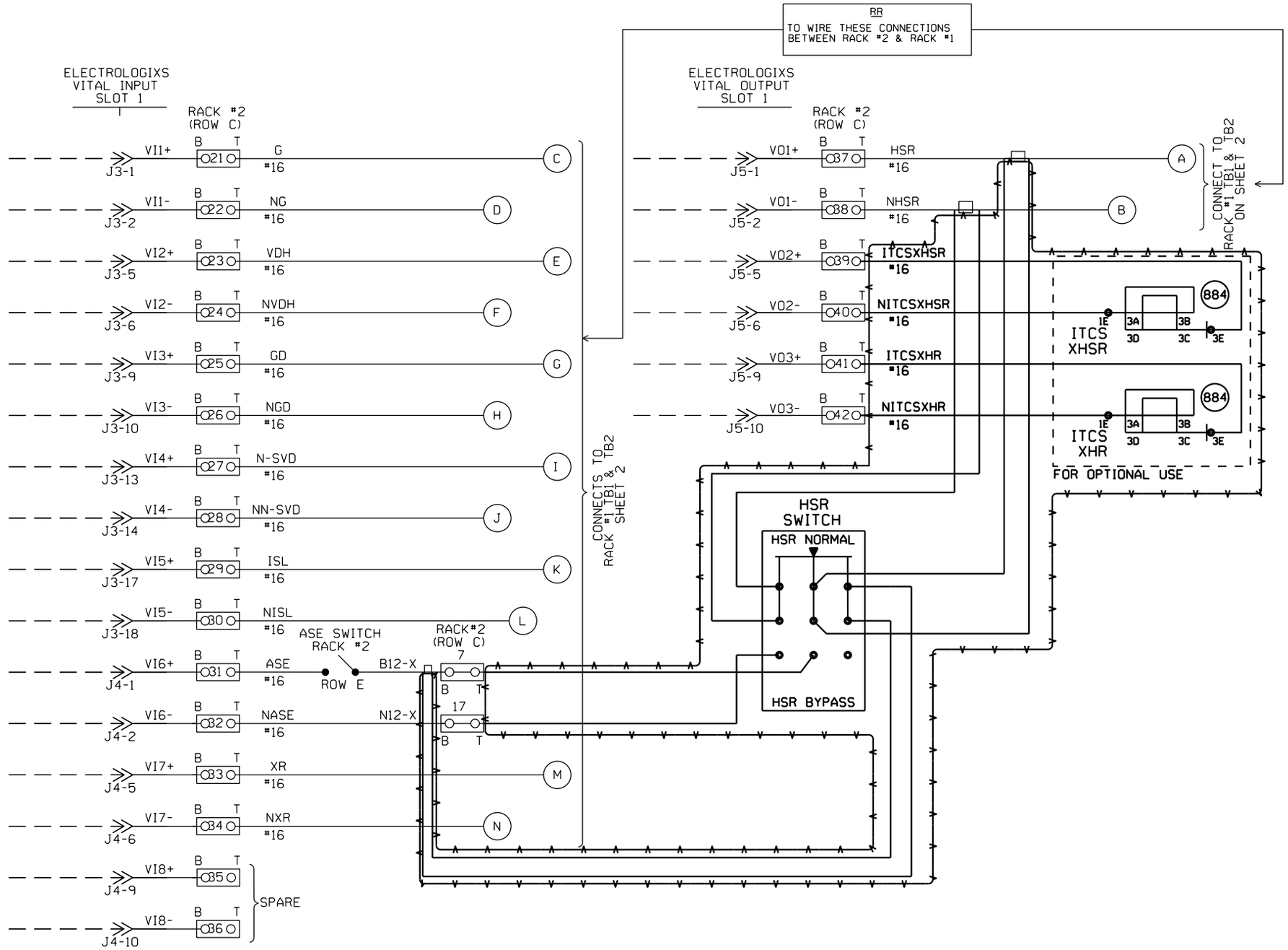


NOTES:

1. INPUT WIRES, OUTPUT WIRES, POWER WIRES, PUT IN SEPARATE BUNDLES.
2. ALL WIRES #16 UNLESS NOTED.
3. O?? O 2 POSITION WAGO BLOCK.

= IN
= OUT

NEW SHEET

| | | | | | |
|---|---|---|---|---|---|
| Designed: 6/01/12 TIER 3 PHASE 2 M.P.194.00 TO M.P.177.00 UPGRADE XINGS TO 4 QUAD WITH EGMS, VARIOUS CP'S Rec#: WO#: 14052 IS: NST/MJF | 02-24-09 INSTALL MONITOR RACK FOR XINGS W.O. 87933 MAS | UNION PACIFIC QUALITY PRODUCTIVITY SAFETY SIGNAL DESIGN | Date: 09-25-08 Des: CRK Chk: AFE: 87933 | UNION PACIFIC RAILROAD SHERMAN, ILLINOIS ANDREW ROAD SPRINGFIELD SUBDIVISION Office of AVP Engineering-Signal Omaha, Nebraska | Sh.: 9 DOT 294281X MP: 177.87 ID: CSL17787.9 |

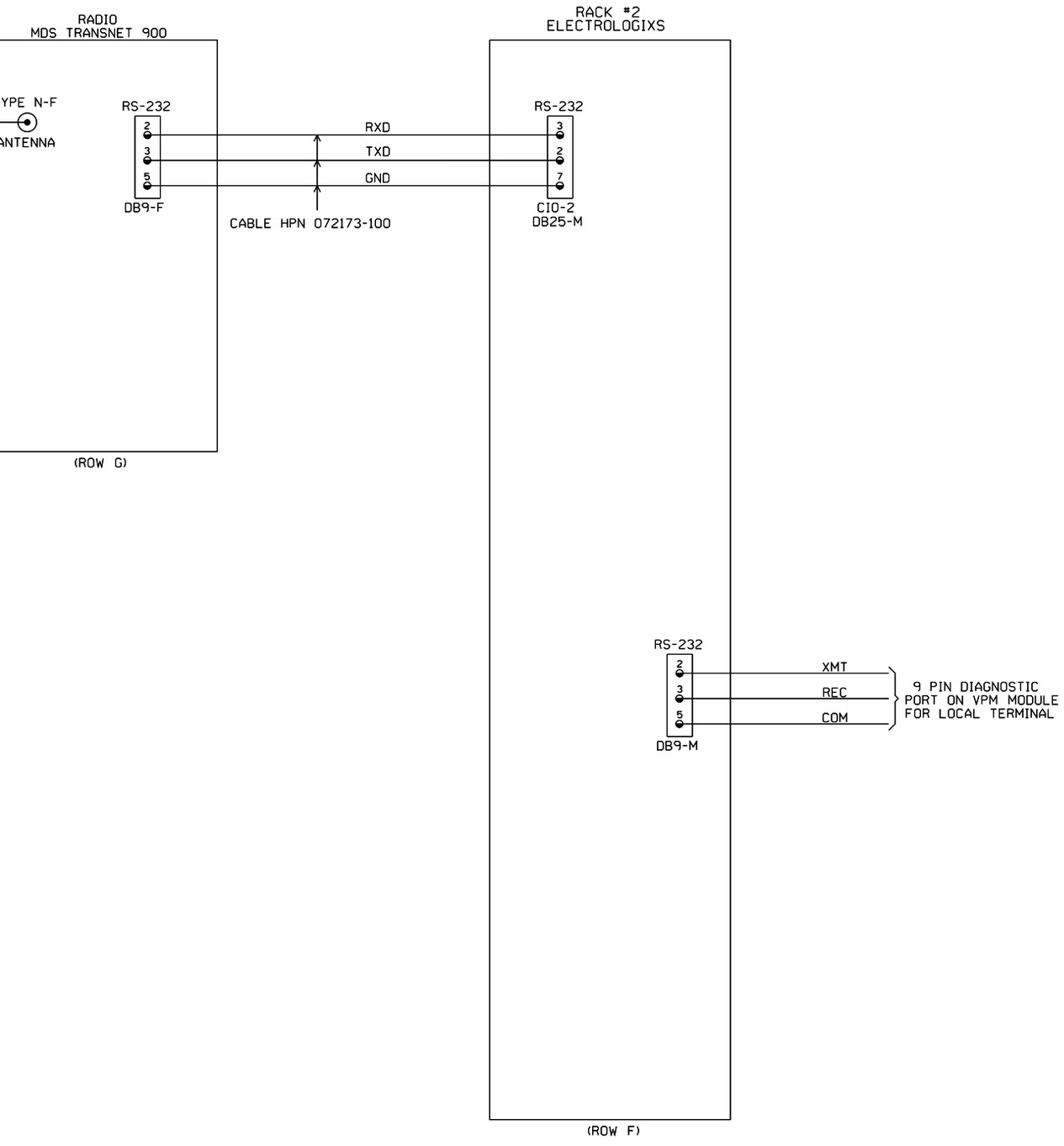


= IN
= OUT

~~NEW SHEET~~

| | | | | | | | | |
|---|---|---|---|---|---|---|---|---|
| | | | | Designed: 6/01/12<br>TIER 3 PHASE 2<br>M.P.194.00 TO<br>M.P.177.00<br>UPGRADE XINGS TO<br>4 QUAD WITH EGMS,<br>VARIOUS CP'S<br>Rec#: WO#:14052<br>IS: /NST/MJF | 02-24-09<br>INSTALL MONITOR RACK<br>FOR XINGS<br>W.O. 87933 MAS | CIRCUIT MODIFICATIONS ARE NOT TO BE MADE WITHOUT AUTHORITY FROM THE OFFICE OF SIGNAL DESIGN | Date: 09-25-08<br>Des: CRK<br>Chk:<br>AFE: 87933 | UNION PACIFIC RAILROAD<br>SHERMAN, ILLINOIS<br>ANDREW ROAD<br>SPRINGFIELD SUBDIVISION<br>Office of AVP Engineering-Signal Omaha, Nebraska | Sh.: 9A<br>DOT 294281X<br>MP: 177.87<br>ID: CSL17787.DBX |

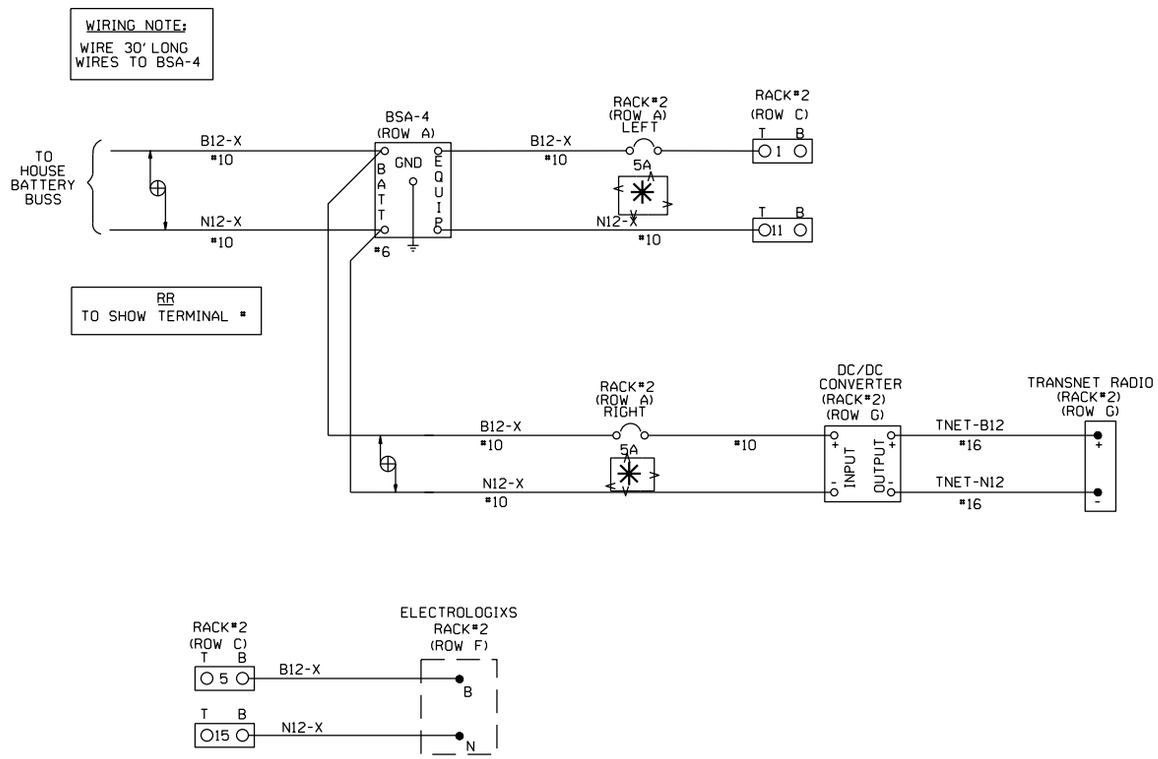


✳ = FIELD VERIFY - LAYOUT SHOWS 20A

NOTES:

DENOTES TWISTED PAIR

O?? O 2 POSITION WAGO BLOCK

= IN
= OUT

~~NEW SHEET~~

| | | | | | | | | | | |
|---|---|---|---|---|---|---|---|---|---|---|
| | | | | | | Designed: 6/01/12<br>TIER 3 PHASE 2<br>M.P.194.00 TO<br>M.P.177.00<br>UPGRADE XINGS TO<br>4 QUAD WITH EGMS,<br>VARIOUS CP'S<br>Rec#: WO#: 14052<br>IS: /NST/MJF | 02-24-09<br>INSTALL MONITOR RACK<br>FOR XINGS<br>W.O. 87933 MAS | CIRCUIT<br>MODIFICATIONS<br>ARE NOT TO BE<br>MADE WITHOUT<br>AUTHORITY FROM<br>THE OFFICE OF<br>SIGNAL DESIGN | Date: 09-25-08<br>Des: CRK<br>Chk:<br>AFE: 87933 | UNION PACIFIC RAILROAD<br>SHERMAN, ILLINOIS<br>ANDREW ROAD<br>SPRINGFIELD SUBDIVISION<br>Office of AVP Engineering-Signal Omaha, Nebraska | Sh.: 9C 98<br>DOT 294281X<br>MP: 177.87<br>ID: CSL17787.9CX 98X |

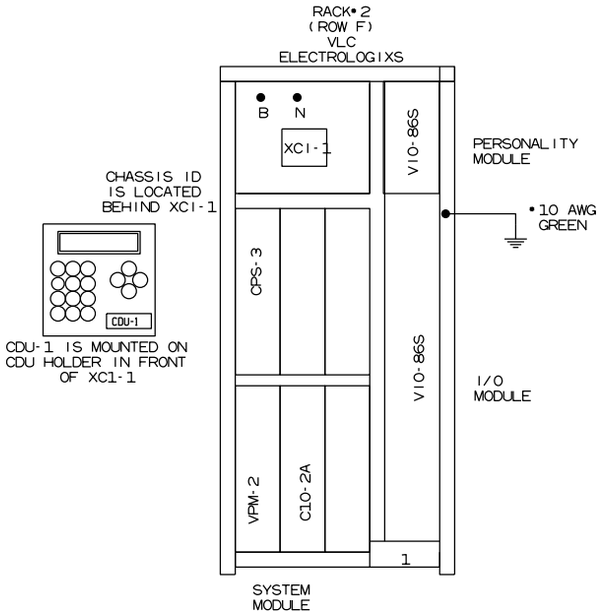


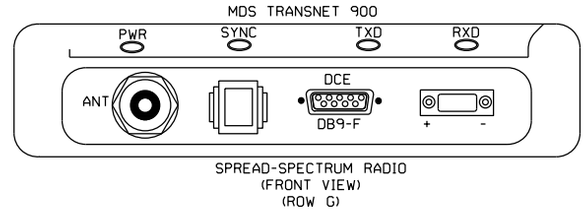


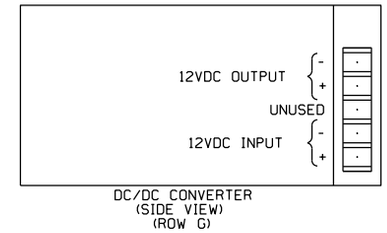


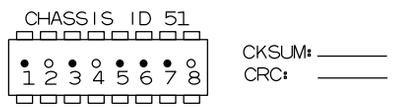


○ = TAB INTACT
● = TAB PUNCHED OUT

= IN
= OUT

~~NEW SHEET~~

| | | | | | | | | | | | |
|---|---|---|---|---|---|---|---|---|---|---|---|
| | | | | | | Designed: 6/01/12<br>TIER 3 PHASE 2<br>M.P.194.00 TO<br>M.P.177.00<br>UPGRADE XINGS TO<br>4 QUAD WITH EGMS,<br>VARIOUS CP'S<br>Rec#: WO#: 14052<br>IS: NST/MJF | 02-24-09<br>INSTALL MONITOR RACK<br>FOR XINGS<br>W.O. 87933 MAS | CIRCUIT<br>MODIFICATIONS<br>ARE NOT TO BE<br>MADE WITHOUT<br>AUTHORITY FROM<br>THE OFFICE OF<br>SIGNAL DESIGN | Date: 09-25-08<br>Des: CRK<br>Chk:<br>AFE: 87933 | UNION PACIFIC RAILROAD<br>SHERMAN, ILLINOIS<br>ANDREW ROAD<br>SPRINGFIELD SUBDIVISION<br>Office of AVP Engineering-Signal Omaha, Nebraska | Sh.: 9D 9C<br>DOT 294281X<br>MP: 177.87<br>ID: CSL17787.9CX |

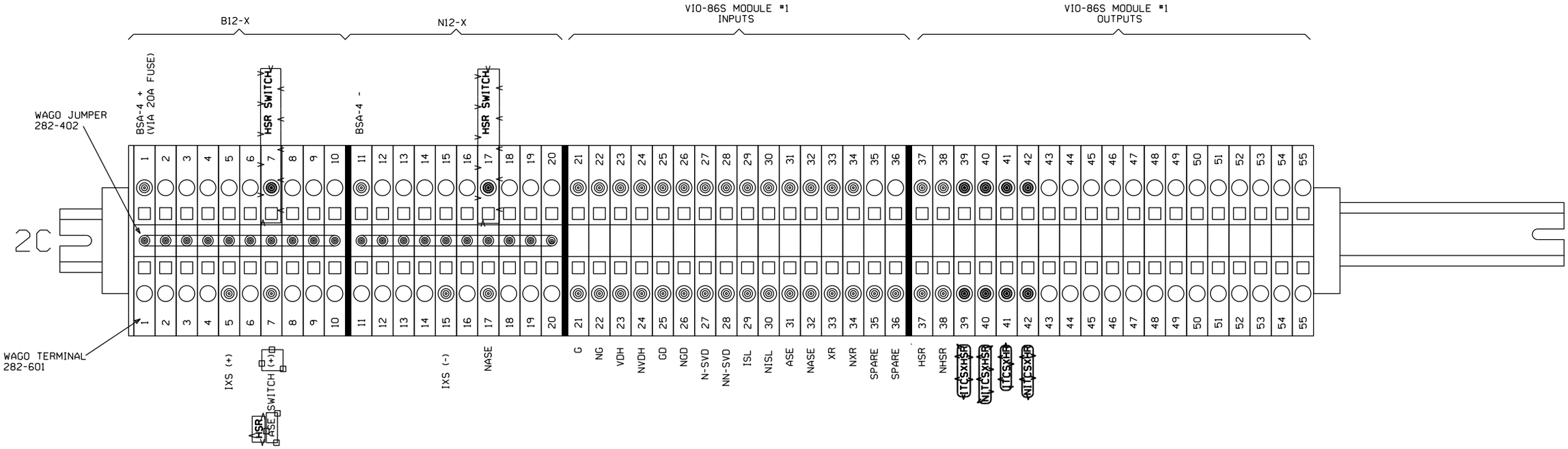


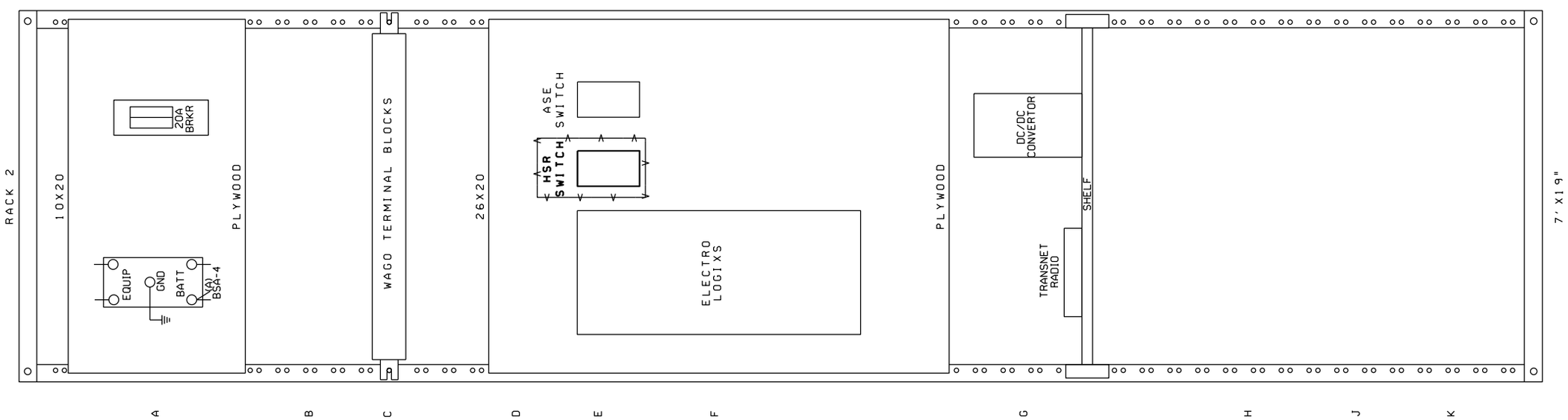


= IN

= OUT

NEW SHEET

| | | | | | |
|---|---|---|---|---|---|
| Redesigned: 6/01/12<br>TIER 3 PHASE 2<br>M.P.194.00 TO<br>M.P.177.00<br>UPGRADE XINGS TO<br>4 QUAD WITH EGMS,<br>VARIOUS CP'S<br>Rec#: WO#: 14052<br>IS: NST/MJF | 02-24-09<br>INSTALL MONITOR RACK<br>FOR XINGS<br>W.O. 87933 MAS | CIRCUIT<br>MODIFICATIONS<br>ARE NOT TO BE<br>MADE WITHOUT<br>AUTHORITY FROM<br>THE OFFICE OF<br>SIGNAL DESIGN | Date: 09-25-08<br>Des: CRK<br>Chk:<br>AFE: 87933 | UNION PACIFIC RAILROAD<br>SHERMAN, ILLINOIS<br>ANDREW ROAD<br>SPRINGFIELD SUBDIVISION<br>Office of AVP Engineering-Signal Omaha, Nebraska | Sh.: 9<br>DOT 294281X<br>MP: 177.87<br>ID: CSL17787.83 |

# EGMS
# PROGRAM INFORMATION

PROGRAM VERSION 4.3

*EGMS DISPLAY PARAMETERS*

| PARAMETER | |
|---|---|
| STARTUP LOGO | UPRR |
| BACKLIGHT TIMEOUT | 015 |
| BUZZER ENABLE | YES |
| DIRECTION INDICATORS | ↓E ↑W |
| BUNGALOW QUAD | SB ENTR |
| DISPLAY QZI | NO |
| LOCAL PREFIX | 'R' |
| REMOTE PREFIX | 'T' |
| CROSSING NAME | ANDREW ROAD |
| CROSSING DESCRIPTION | 4 QUAD PUB AT GRADE |
| CROSSING DOT # | 294281X |

*EGMS ALARM PARAMETERS*

| PARAMETER | |
|---|---|
| GATO ALARM DELAY | 000 |
| GATO GATE DELAY | 000 |
| MAX GATE RELEASE | 09.0 • |
| MAX GATE RESPONSE | 03.0 • |
| CYCLE RESTORE | 001 |
| MTCD PRESENCE | 000 |
| DET FAIL ALARM | YES |
| DET RESTORE DELAY | 000 |
| MAX DET FAILS | 000 |
| AUX IN 1 ENABLE | NO |
| AUX IN 1 RESTORE | 000 |
| AUX IN 2 ENABLE | NO |
| AUX IN 2 RESTORE | 000 |
| AUX IN 3 ENABLE | NO |
| AUX IN 3 RESTORE | 000 |
| AUX IN 4 ENABLE | NO |
| AUX IN 4 RESTORE | 000 |

• ADJUST GATE RELEASE, AND RESPONSE TIMES IN FIELD BASED ON ACTUAL GATE OPERATIONS, AS NECESSARY.

*EGMS OPERATIONAL PARAMETERS*

| PARAMETER | |
|---|---|
| PRIMARY MODE | DYNAMIC |
| SECONDARY MODE | NONE |
| DIS ENTR DETS | NO |
| DELAY ON DOWN | 01.0 |
| REV DET ENABLE | NO |
| DYNAMIC EGCT | 000 |
| TIMED EGCT | 012 |
| ISLAND INHIBIT TIME | 015 |
| XR DET DISABLE | YES |
| BIDIR DELAY | 04.0 |
| DYN ENTRANCE MONITOR | YES |
| ENTRANCE DOWN REQ | YES |
| EXIT UP REQ | NO |
| EGH SENSE | B12 HOLDS |
| ISL 2 ENABLE | NO |
| DUAL EGMS ENABLED | NO |

*EGMS AUX OUTPUT MAPPING*

| PARAMETER | |
|---|---|
| AUX OUT 1 FUNCTION | DET XRISL |
| AUX OUT 1 SOURCE | BOTH |
| AUX OUT 2 FUNCTION | DET HLTH |
| AUX OUT 2 SOURCE | BOTH |
| AUX OUT 3 FUNCTION | GP |
| AUX OUT 3 SOURCE | BOTH |
| AUX OUT 4 FUNCTION | ALARM |
| AUX OUT 4 SOURCE | BOTH |

*GATE PARAMETERS*

| GATE | 1(A) | 2(B) | 3(C) | 4(D) | 5(E) | 6(F) | 7(G) | 8(H) |
|---|---|---|---|---|---|---|---|---|
| GATE TYPE | ENTRANCE | ENTRANCE | EXIT | EXIT | NONE• | NONE• | NONE• | NONE• |
| GATE DIRECTION | ↓E | ↑W | ↓E | ↑W | ↓S | ↓S | ↓S | ↓S |
| VERTICAL CHATTER TIME | 01.0 | 01.0 | 01.0 | 01.0 | 02.0 | 02.0 | 02.0 | 02.0 |
| HORIZONTAL CHATTER TIME | 01.0 | 01.0 | 01.0 | 01.0 | 02.0 | 02.0 | 02.0 | 02.0 |
| MINIMUM ASCENT TIME | 003 | 003 | 003 | 003 | 003 | 003 | 003 | 003 |
| MAXIMUM ASCENT TIME | 015 | 015 | 015 | 015 | 015 | 015 | 015 | 015 |
| MINIMUM DESCENT TIME | 003 | 003 | 003 | 003 | 003 | 003 | 003 | 003 |
| MAXIMUM DESCENT TIME | 015 | 015 | 015 | 015 | 015 | 015 | 015 | 015 |

• GATE TYPE = "NONE" ALL OTHER PARAMETERS IGNORED

*DETECTOR PARAMETERS*

| | (1) E-1400 | | | | (2) E-1400 | | | | (3) E-1400 | | | | (4) E-1400 | | | |
|---|---|---|---|---|---|---|---|---|---|---|---|---|---|---|---|---|
| DETECTOR | 1 | 2 | 3 | 4 | 5 | 6 | 7 | 8 | 9 | 10 | 11 | 12 | 13 | 14 | 15 | 16 |
| DETECTOR TYPE | ENTR | ENTR | EXIT | EXIT | NONE | NONE | NONE | NONE | NONE | NONE | NONE | NONE | NONE | NONE | NONE | NONE |
| DETECTOR DIRECTION | ↓E | ↑W | ↓E | ↑W | ↓S | ↑N | ↓S | ↓S | ↓S | ↓S | ↓S | ↓S | ↓S | ↓S | ↓S | ↓S |
| STRETCH TIME• | 01.0 | 01.0 | 01.0 | 01.0 | 01.0 | 01.0 | 01.0 | 01.0 | 01.0 | 01.0 | 01.0 | 01.0 | 01.0 | 01.0 | 01.0 | 01.0 |
| LONG-TERM OBSTRUCTION | 001 | 001 | 001 | 001 | 000 | 000 | 000 | 000 | 000 | 000 | 000 | 000 | 000 | 000 | 000 | 000 |
| DISABLE ON DOWN | NO | NO | NO | NO | NO | NO | NO | NO | NO | NO | NO | NO | NO | NO | NO | NO |
| AUX OUTPUT 1 | YES | YES | YES | YES | YES | YES | YES | YES | YES | YES | YES | YES | YES | YES | YES | YES |
| AUX OUTPUT 2 | YES | YES | YES | YES | YES | YES | YES | YES | YES | YES | YES | YES | YES | YES | YES | YES |
| AUX OUTPUT 3 | YES | YES | YES | YES | YES | YES | YES | YES | YES | YES | YES | YES | YES | YES | YES | YES |
| AUX OUTPUT 4 | YES | YES | YES | YES | YES | YES | YES | YES | YES | YES | YES | YES | YES | YES | YES | YES |

• INCREASE STRETCH TIME AS NECESSARY TO MAINTAIN VEHICLE DETECTION FROM LOOP TO LOOP.
•• DETECTORS 5 - 16 DEFAULT TO "NONE" AND MUST BE CONFIGURED MANUALLY
DETECTORS 5 & 6 DEFAULT TO "INT" WHEN 2TK DEFAULT CONFIGURATION IS SELECTED.
WHEN DETECTOR TYPE IS "NONE", ALL OTHER PARAMETERS IGNORED.

NEW SHEET

Designed: 6/01/12
TIER 3 PHASE 2
M.P.194.00 TO
M.P.177.00
UPGRADE XINGS TO
4 QUAD WITH EGMS,
VARIOUS CP'S
Rec#: WO#: 14052
IS: / /NST/MJF

| MODIFICATION LEVEL | |
|---|---|
| Q.A. LAST LEVEL CHECKED | DU |
| LAST LEVEL MOD THIS TYPICAL | DU |
| LAST LEVEL BY DESIGNER | DU |
| CHANGED FROM TYPICAL? | Y |

REV 01.24.11 4K 2TKEGMS.8

CIRCUIT MODIFICATIONS ARE NOT TO BE MADE WITHOUT AUTHORITY FROM THE OFFICE OF SIGNAL DESIGN

Date: 06-01-12
Des: NST
Chk:
AFE: 14052

**UNION PACIFIC RAILROAD**
SHERMAN, ILLINOIS
ANDREW ROAD
SPRINGFIELD SUBDIVISION
Office of AVP Engineering-Signal Omaha, Nebraska

Sh.: 10
DOT 294 281X
MP: 177.87
ID: CSL17787.10X

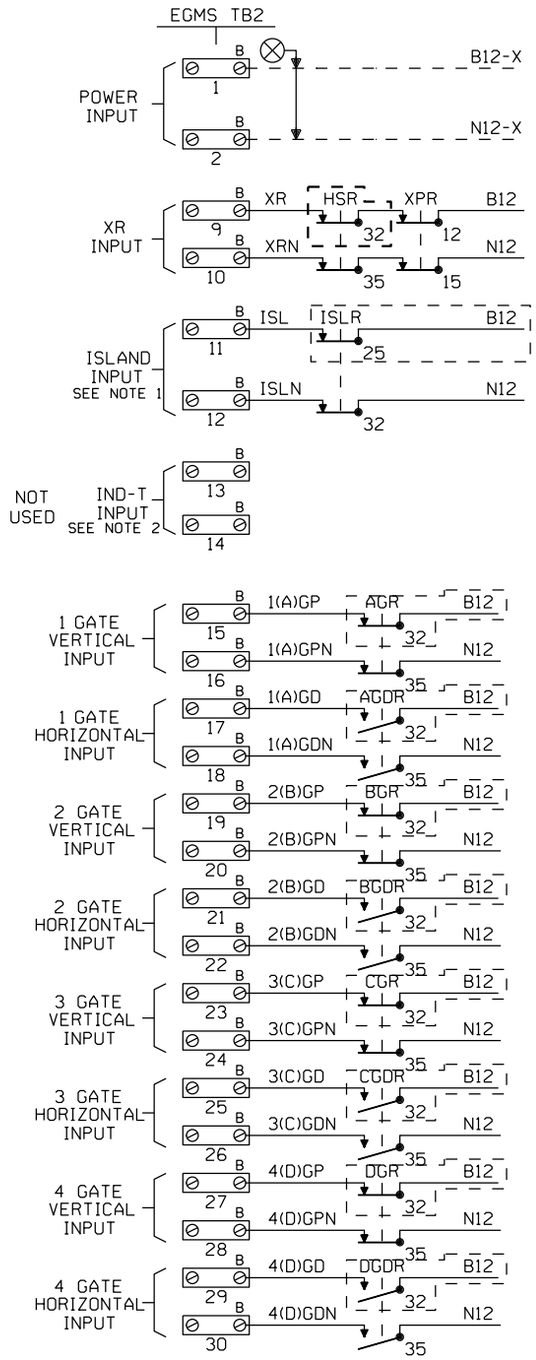


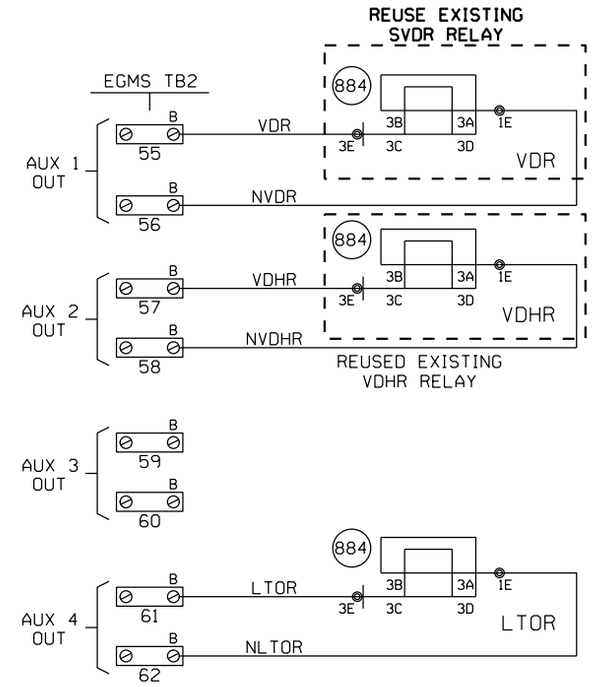


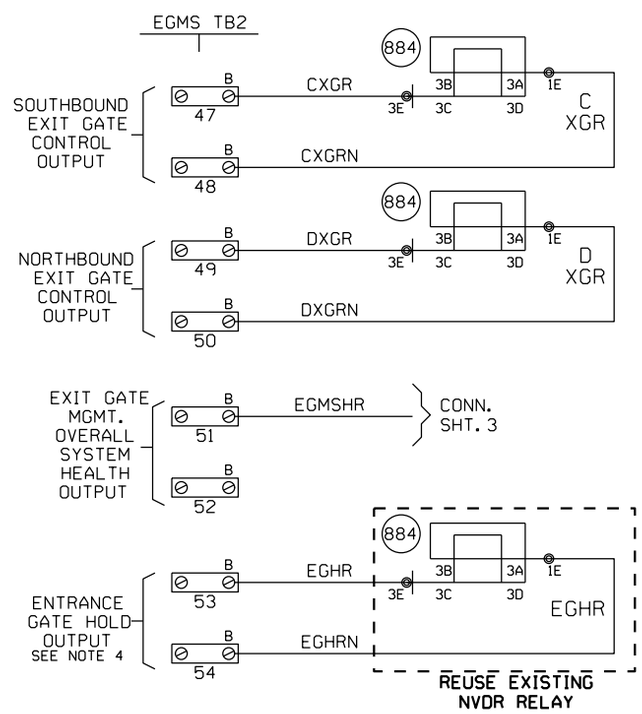


NOTES

1. EGMS ISL1 INPUT: "AND" ISLAND INPUTS FROM ALL TRACKS. NOTE THAT WHEN THIS INPUT IS DE-ENERGIZED THE XR INPUT ON TB2, 9 & 10 MUST ALSO BE DE-ENERGIZED BEFORE THE EXIT GATES MAY BE DRIVEN DOWN.
2. EGMS ISL2 INPUT: MAY BE USED FOR STAND ALONE ISLAND INPUT. THIS INPUT IS NOT DEPENDENT UPON THE STATUS OF XR INPUT ON TB2, 9 & 10. THIS INPUT MUST BE FIELD SELECTED AND ENABLED DURING EGMS SETUP.
3. ALL WIRING TO EGMS TO BE #16 AWG FLEX.
4. ENTRANCE GATE HOLD (EGH) CAN BE PROGRAMMED AS A NORMALLY ENERGIZED OR NORMALLY DE-ENERGIZED OUTPUT.

- - - - = REDRAWN AND REUSED FROM SHEET 2

NEW SHEET

| | | | | | | | | | | |
|---|---|---|---|---|---|---|---|---|---|---|
| Designed: 6/01/12 TIER 3 PHASE 2 M.P.194.00 TO M.P.177.00 UPGRADE XINGS TO 4 QUAD WITH EGMS, VARIOUS CP'S Rec#: WO#: 14052 IS: / / /NST/MJF | MODIFICATION LEVEL | | CIRCUIT MODIFICATIONS ARE NOT TO BE MADE WITHOUT AUTHORITY FROM THE OFFICE OF SIGNAL DESIGN | Date: 06-01-12 | UNION PACIFIC RAILROAD | Sh.: 10A |
| | Q.A. LAST LEVEL CHECKED | DU | | Des: NST | SHERMAN, ILLINOIS | DOT 294 281X |
| | LAST LEVEL MOD THIS TYPICAL | DU | | Chk: | ANDREW ROAD | MP: 177.87 |
| | LAST LEVEL BY DESIGNER | DU | | AFE: 14052 | SPRINGFIELD SUBDIVISION | ID: CSL17787.10AX |
| | CHANGED FROM TYPICAL? | Y | | | Office of AVP Engineering-Signal Omaha, Nebraska | |
| | REV 01.24.11 4K 2TKEGMS.8A | | | | | |

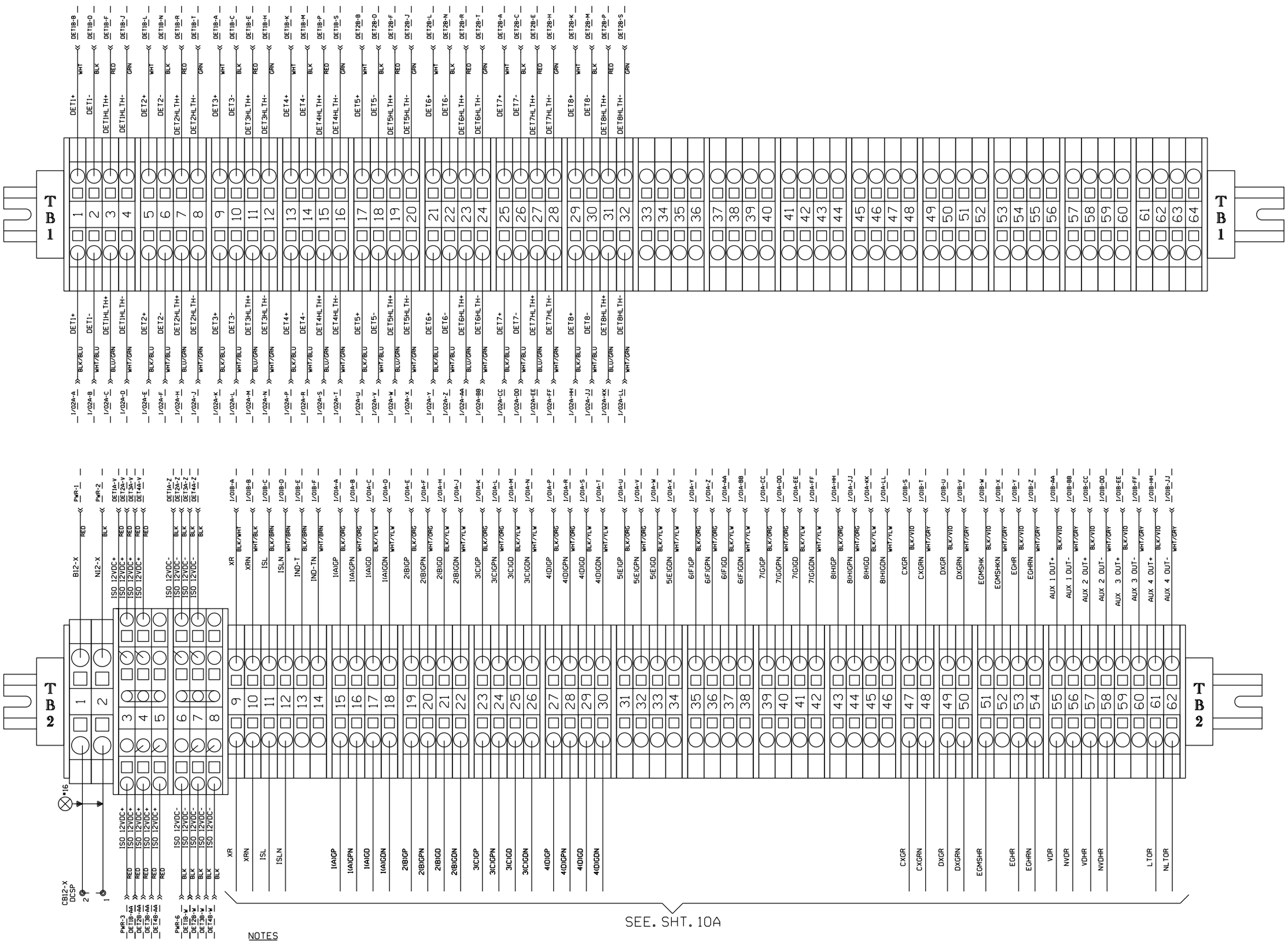


NOTES

1. TB1 PROVIDES AN EXTERNAL PASS THROUGH BETWEEN THE E-1400 MODULES AND THE VITAL INPUT MODULE IN CHASSIS POSITION 6. EGMS OR EGMS+ UNITS CONFIGURED FOR LESS THAN 4 EACH E-1400 MODULES WILL ONLY BE WIRED AS REQUIRED.
2. TB2-3 THROUGH TB2-8 PROVIDE A CONNECTION BUS FOR INTERNAL SUPPLY VOLTAGES AND MUST NOT BE USED TO SUPPLY OTHER CIRCUITS.

NEW SHEET

Designed: 6/01/12
TIER 3 PHASE 2
M.P.194.00 TO
M.P.177.00
UPGRADE XINGS TO
4 QUAD WITH EGMS,
VARIOUS CP'S
Rec#: WO#: 14052
IS: / /NST/MJF

| MODIFICATION LEVEL | |
|---|---|
| Q.A. LAST LEVEL CHECKED | DU |
| LAST LEVEL MOD THIS TYPICAL | DU |
| LAST LEVEL BY DESIGNER | DU |
| CHANGED FROM TYPICAL? | Y |

REV 01.24.11 4K 2TKEGMS.9C

CIRCUIT MODIFICATIONS ARE NOT TO BE MADE WITHOUT AUTHORITY FROM THE OFFICE OF SIGNAL DESIGN

Date: 06-01-12
Des: NST
Chk:
AFE: 14052

**UNION PACIFIC RAILROAD**

SHERMAN, ILLINOIS
ANDREW ROAD
SPRINGFIELD SUBDIVISION

Office of AVP Engineering-Signal — Omaha, Nebraska

Sh.: 10B
DOT 294 281X
MP: 177.87
ID: CSL17787.10BX

## (1) E-1400 SETUP PARAMETERS

| FUNCTION | CH. 1 | CH. 2 | CH. 3 | CH. 4 |
|---|---|---|---|---|
| FREQUENCY SETTING | 2 | 4 | 6 | 8 |
| SENSITIVIY SETTING | 6• | 6• | 6• | 6• |
| OPTION 1 (TEMP L DISPLAY) | OFF | | | |
| OPTION 2 (TEMP ΔL/L DISPLAY) | OFF | | | |
| OPTION 3 (NOISE FILTER) | 3.00 | 3.00 | 3.00 | 3.00 |
| OPTION 4 (TRACKING) | 4.02 | 4.02 | 4.02 | 4.02 |
| OPTION 5 (SENSITIVITY BOOST) | 5.00 | 5.00 | 5.00 | 5.00 |
| OPTION 6 (TEMP AUDIBLE SIGNAL) | OFF | OFF | OFF | OFF |
| CHECKLOOP INTERVAL | 005 | 005 | 005 | 005 |
| DETECTOR ID | 000 | | | |
| OPTION 7 (DETECTOR SYNC) | 7.01 | | | |
| OPTION 8 (ISL OPTION) | OFF | | | |
| OPTION 9 (SHUNT ENHANCEMENT SE) | OFF | OFF | OFF | OFF |
| MAIN VITAL OUTPUT DELAY | 00.0 | 00.0 | 00.0 | 00.0 |
| MAIN VITAL OUTPUT EXTENSION | 00.0 | 00.0 | 00.0 | 00.0 |
| MAIN VITAL OUTPUT MAPPING | 10 | 20 | 40 | 80 |
| AUX VITAL OUTPUT MAPPING | 001 | 002 | 004 | 008 |
| LOOP FREQUENCY (Khz) | | | | |
| LOOP INDUCTANCE (MICRO HENRIES) | | | | |

SOFTWARE VERSION 4.02
• FIELD VERIFY

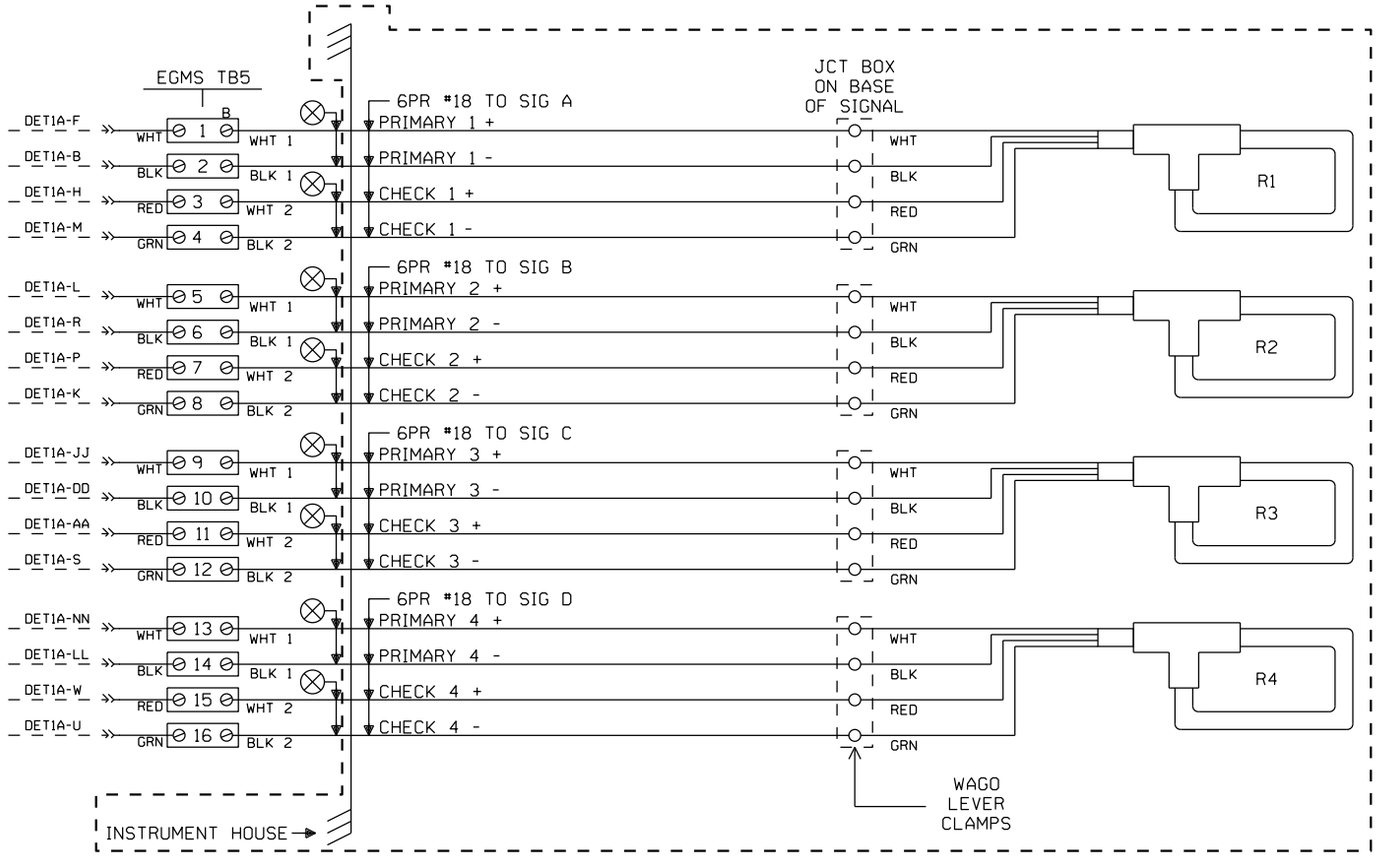


CABLE TABULATION

CABLE NO. (11) 6/PR #18 U.G.C. TO JCT BOX ON BASE OF GATE "A" (RCL PART #03-094-005)
CABLE NO. (12) 6/PR #18 U.G.C. TO JCT BOX ON BASE OF GATE "B" (RCL PART #03-094-005)
CABLE NO. (13) 6/PR #18 U.G.C. TO JCT BOX ON BASE OF GATE "C" (RCL PART #03-094-005)
CABLE NO. (14) 6/PR #18 U.G.C. TO JCT BOX ON BASE OF GATE "D" (RCL PART #03-094-005)

- - - - - = EXISTING

NEW SHEET

Designed: 6/01/12
TIER 3 PHASE 2
M.P.194.00 TO
M.P.177.00
UPGRADE XINGS TO
4 QUAD WITH EGMS,
VARIOUS CP'S
Rec#: WO#: 14052
IS: / /
/ /NST/MJF

| MODIFICATION LEVEL | |
|---|---|
| O. A. LAST LEVEL CHECKED | DU |
| LAST LEVEL MOD THIS TYPICAL | DU |
| LAST LEVEL BY DESIGNER | DU |
| CHANGED FROM TYPICAL? | Y |

REV 01.24.11 4K 2TKEGMS.9

CIRCUIT MODIFICATIONS ARE NOT TO BE MADE WITHOUT AUTHORITY FROM THE OFFICE OF SIGNAL DESIGN

Date: 06-01-12
Des: NST
Chk:
AFE: 14052

**UNION PACIFIC RAILROAD**
SHERMAN, ILLINOIS
ANDREW ROAD
SPRINGFIELD SUBDIVISION
Office of AVP Engineering-Signal Omaha, Nebraska

Sh.: 10C
DOT 294 281X
MP: 177.87
ID: CSL17787.10CX

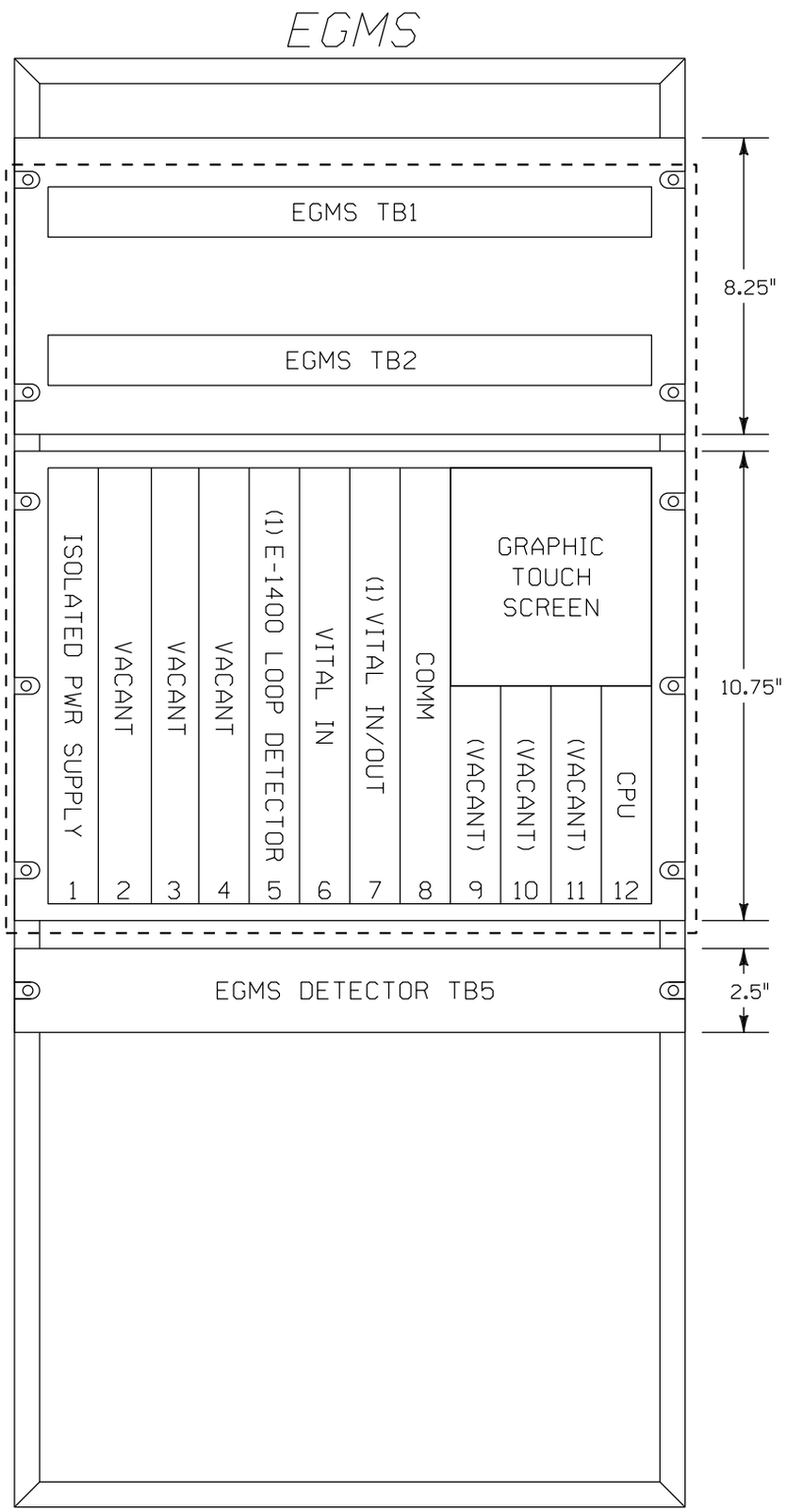


- - - - = EXISTING

NEW SHEET

| | | | | | | | | | | | | | |
|---|---|---|---|---|---|---|---|---|---|---|---|---|---|
| | | | | | Designed: 6/01/12<br>TIER 3 PHASE 2<br>M.P.194.00 TO<br>M.P.177.00<br>UPGRADE XINGS TO<br>4 QUAD WITH EGMS,<br>VARIOUS CP'S<br>Rec#: WO#: 14052<br>IS: / /<br>/ /NST/MJF | MODIFICATION LEVEL | | CIRCUIT MODIFICATIONS ARE NOT TO BE MADE WITHOUT AUTHORITY FROM THE OFFICE OF SIGNAL DESIGN | Date: 06-01-12<br>Des: NST<br>Chk:<br>AFE: 14052 | UNION PACIFIC RAILROAD<br>SHERMAN, ILLINOIS<br>ANDREW ROAD<br>SPRINGFIELD SUBDIVISION<br>Office of AVP Engineering-Signal Omaha, Nebraska | Sh.: 10D<br>DOT 294 281X<br>MP: 177.87<br>ID: CSL17787.10DX |
| | | | | | | Q.A. LAST LEVEL CHECKED | DU | | | | | |
| | | | | | | LAST LEVEL MOD THIS TYPICAL | DU | | | | | |
| | | | | | | LAST LEVEL BY DESIGNER | DU | | | | | |
| | | | | | | CHANGED FROM TYPICAL?<br>REV 01.24.11 4K 2TKEGMS.9B | Y | | | | | |

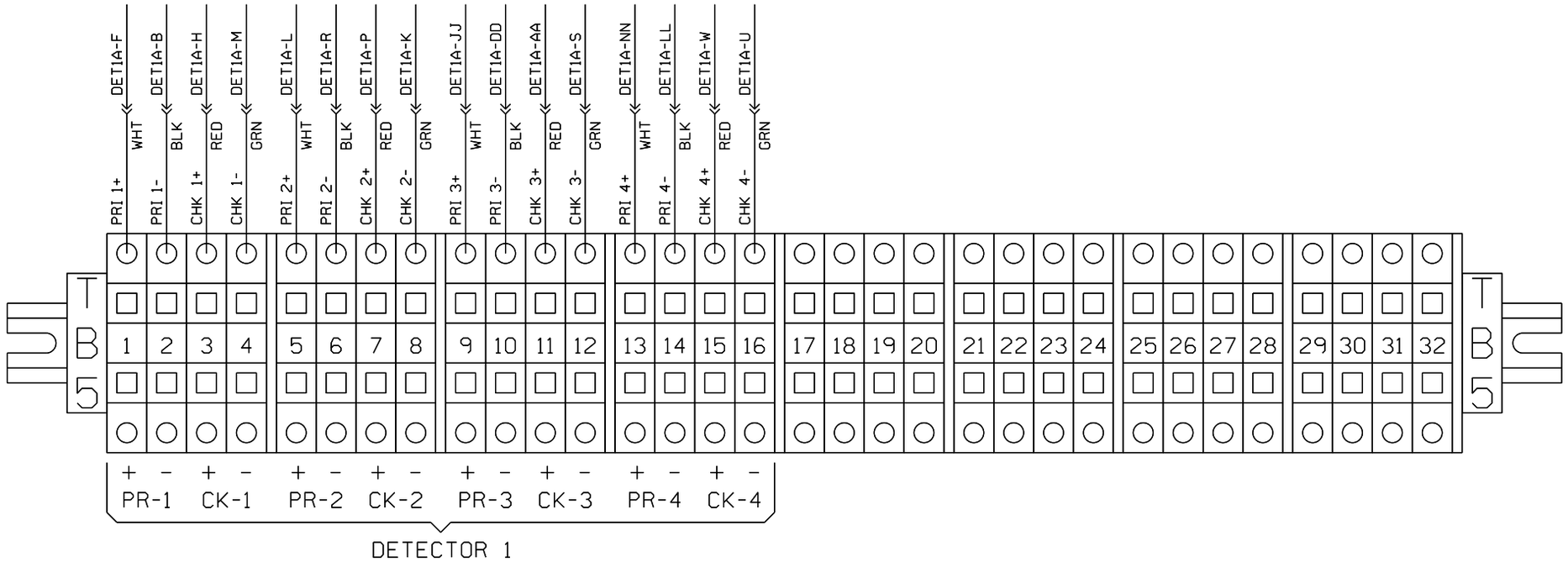


NEW SHEET

| | | | | | | | | | | | |
|---|---|---|---|---|---|---|---|---|---|---|---|
| | | | | | Designed: 6/01/12<br>TIER 3 PHASE 2<br>M.P.194.00 TO<br>M.P.177.00<br>UPGRADE XINGS TO<br>4 QUAD WITH EGMS,<br>VARIOUS CP'S<br>Rec#: WO#: 14052<br>IS: / /<br>/ /NST/MJF | MODIFICATION LEVEL | | CIRCUIT MODIFICATIONS ARE NOT TO BE MADE WITHOUT AUTHORITY FROM THE OFFICE OF SIGNAL DESIGN | Date: 06-01-12<br>Des: NST<br>Chk:<br>AFE: 14052 | UNION PACIFIC RAILROAD<br>SHERMAN, ILLINOIS<br>ANDREW ROAD<br>SPRINGFIELD SUBDIVISION<br>Office of AVP Engineering-Signal Omaha, Nebraska | Sh.: 10E<br>DOT 294 281X<br>MP: 177.87<br>ID: CSL17787.10EX |
| | | | | | | Q.A. LAST LEVEL CHECKED | DU | | | | |
| | | | | | | LAST LEVEL MOD THIS TYPICAL | DU | | | | |
| | | | | | | LAST LEVEL BY DESIGNER | DU | | | | |
| | | | | | | CHANGED FROM TYPICAL? | Y | | | | |
| | | | | | | REV 01.24.11 4K 2TKEGMS.9D | | | | | |

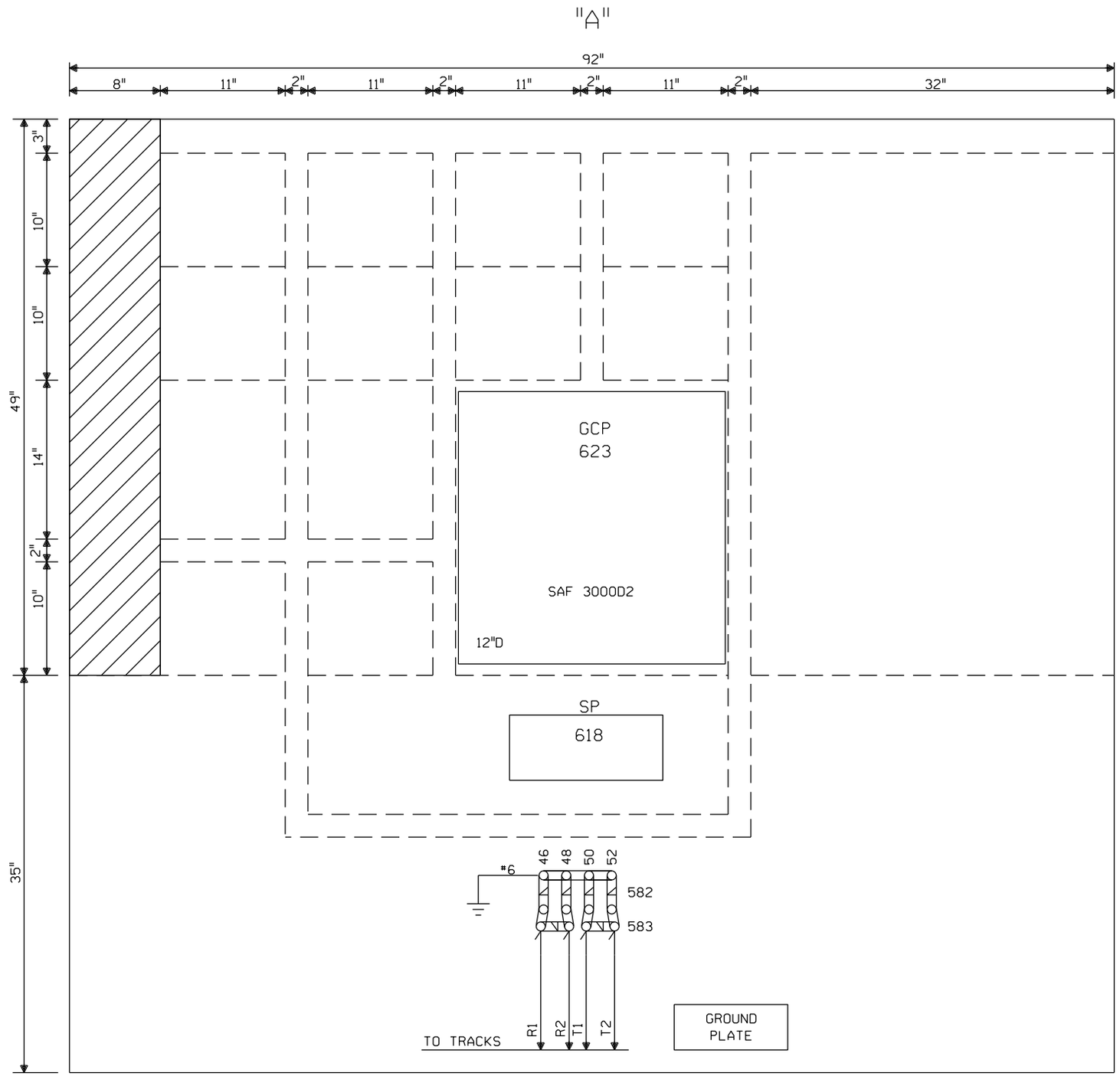


TWO CABLE ENTRANCES ON THIS WALL

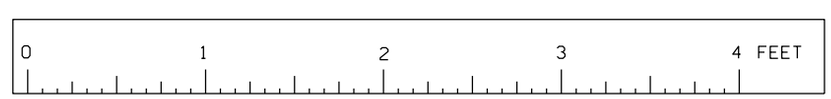


SCALE: 1.5 INCHES = 1 FOOT

SHERMAN, ILLINOIS
ANDREW ROAD
M.P.177.87
SPRINGFIELD SUBDIVISION
D.O.T.#294 281X

= IN
= OUT

Designed: 6/01/12
TIER 3 PHASE 2
M.P.194.00 TO
M.P.177.00
UPGRADE XINGS TO
4 QUAD WITH EGMS,
VARIOUS CP'S
Rec#: WO#:14052
IS: / /NST/MJF

REV. 6-20-08
UPGRADED CROSSING
PROTECTION FOR THE
HIGH SPEED RAIL
PROJ. FROM MAZONIA
TO SPRINGFIELD
W.O. # 00183
REC. #15265
4-8-06 JJF
JR/WITT/WITT/JNM

| MODIFICATION LEVEL | |
|---|---|
| Q.A. LAST LEVEL CHK'D. | DA |
| LAST LEVEL MOD. THIS TYP. | CZ |
| LAST LEVEL BY DESIGNER. | DD |
| CHANGED FROM TYP.? Y/N | Y |

CIRCUIT MODIFICATIONS ARE NOT TO BE MADE WITHOUT AUTHORITY FROM THE OFFICE OF SIGNAL DESIGN

DES: WITT.IND.
DIG: WITT.IND.
CHK: J.J.F.
A.F.E. 00183
ID= CSL17787.IDX
CSL17787.ITX

UNION PACIFIC RAILROAD
BLOOMINGTON, ILLINOIS TO
VALLEY JCT., ILLINOIS
C.T.C. CIRCUITS
Office of AVP Engineering-Signal OMAHA NEBR.

DATE 4-1-02
SHEET 10 of 11
DWG 177.87
RTE-CSL

(REV. 7-9-00 )(HOUSE.TYP)

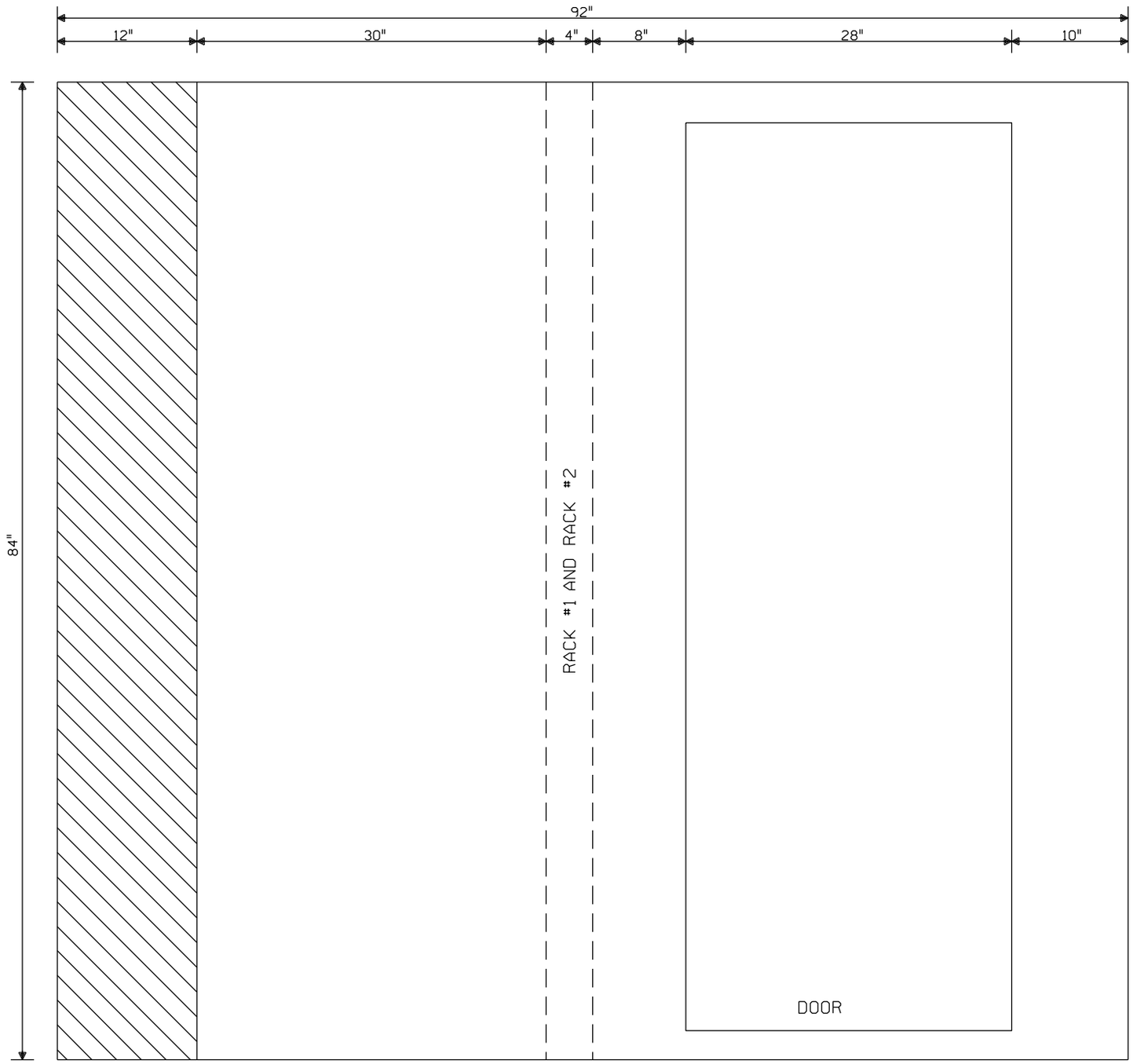


PLAN VIEW
8'x8' HOUSE
—NO SCALE—

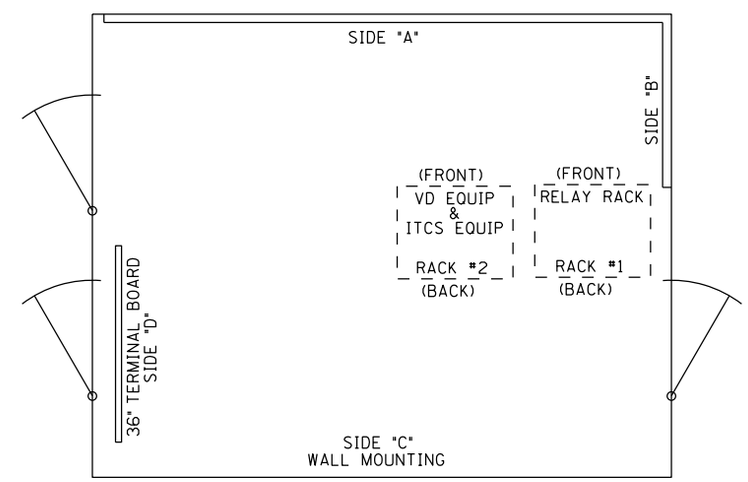


FIELD TO VERIFY LOCATION OF ANTENNAS, AND SURGE SUPPRESSORS FOR ANTENNAS.

= IN

= OUT

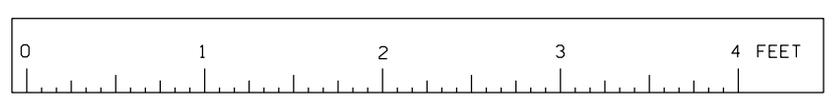


SCALE: 1.5 INCHES = 1 FOOT

= IN

= OUT

SHERMAN, ILLINOIS
ANDREW ROAD
M.P.177.87
SPRINGFIELD SUBDIVISION
D.O.T.#294 281X

| | | | | | | | | | |
|---|---|---|---|---|---|---|---|---|---|
| Designed: 6/01/12<br>TIER 3 PHASE 2<br>M.P.194.00 TO<br>M.P.177.00<br>UPGRADE XINGS TO<br>4 QUAD WITH EGMS,<br>VARIOUS CP'S<br>Rec#: WO#: 14052<br>IS: /NST/MJF | 02-24-09<br>INSTALL MONITOR RACK<br>FOR XINGS<br>W.O. 87933 MAS | REV. 6-20-08<br>UPGRADED CROSSING<br>PROTECTION FOR THE<br>HIGH SPEED RAIL<br>PROJ. FROM MAZONIA<br>TO SPRINGFIELD<br>W.O. # 00183<br>REC. #15265<br>4-8-06 JJF<br>JR/WITT/WITT/JNM | MODIFICATION LEVEL<br>Q.A. LAST LEVEL CHK'D. DA<br>LAST LEVEL MOD. THIS TYP. CZ<br>LAST LEVEL BY DESIGNER. DD<br>CHANGED FROM TYP.? Y/N Y | CIRCUIT<br>MODIFICATIONS<br>ARE NOT TO BE<br>MADE WITHOUT<br>AUTHORITY FROM<br>THE OFFICE OF<br>SIGNAL DESIGN | DES: WITT.IND.<br>DIG: WITT.IND.<br>CHK: J.J.F.<br>A.F.E. 00183<br>ID= CSL17787.1X<br>CSL17787.12X | UNION PACIFIC RAILROAD<br>BLOOMINGTON, ILLINOIS TO<br>VALLEY JCT., ILLINOIS<br>C.T.C. CIRCUITS<br>Office of AVP Engineering-Signal OMAHA NEBR. | DATE 4-1-02<br>SHEET 11 12<br>DWG 177.87<br>RTE-CSL |

(REV. 7-9-00 )(HOUSE.TYP)

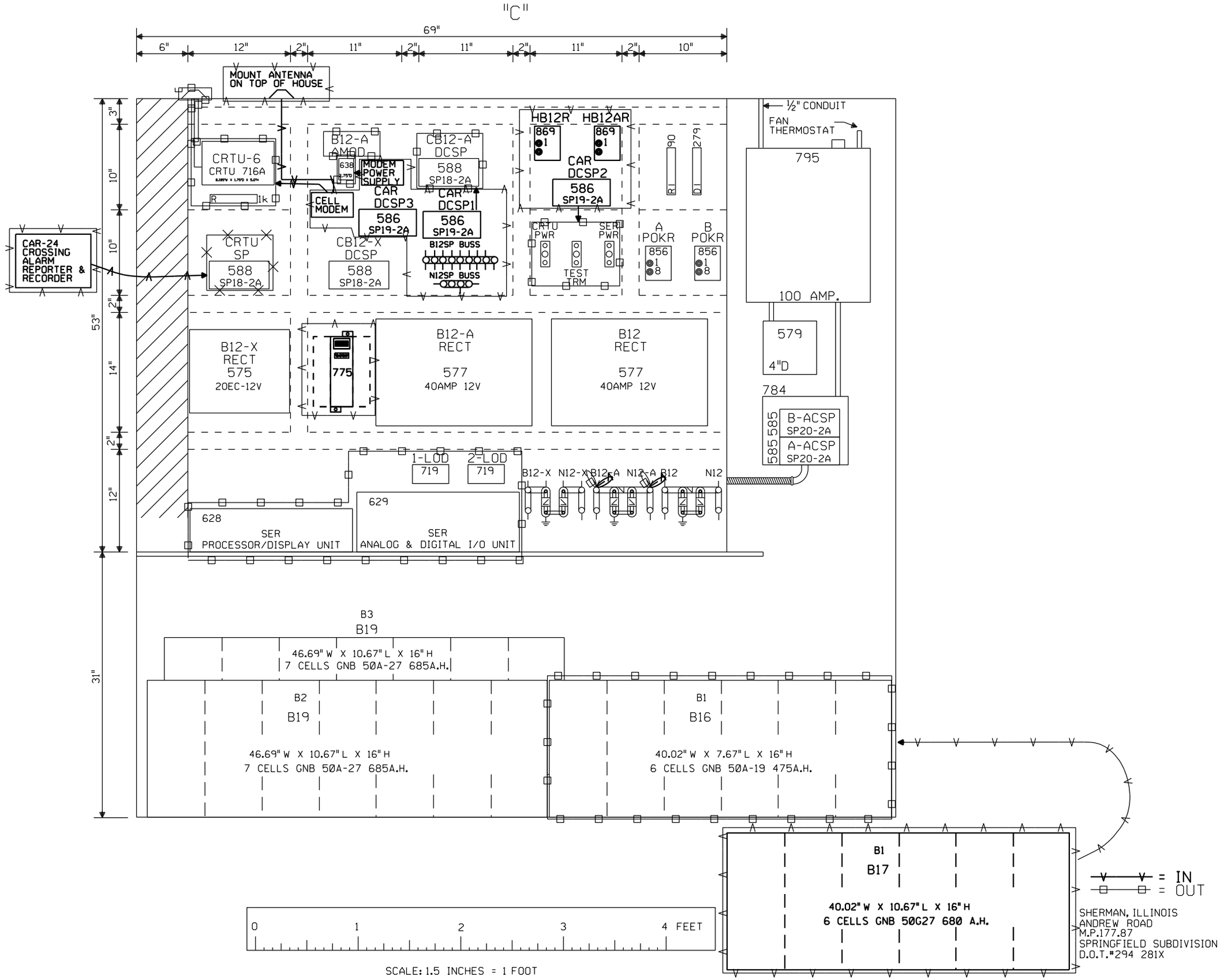


Designed: 6/01/12
TIER 3 PHASE 2
M.P.194.00 TO
M.P.177.00
UPGRADE XINGS TO
4 QUAD WITH EGMS,
VARIOUS CP'S
Rec#: WO#: 14052
IS: /NST/MJF

REV. 6-20-08
UPGRADED CROSSING
PROTECTION FOR THE
HIGH SPEED RAIL
PROJ. FROM MAZONIA
TO SPRINGFIELD
W.O. # 00183
REC. #15265
4-8-06 JJF
JR/WITT/WITT/JNM

| MODIFICATION LEVEL | |
|---|---|
| Q.A. LAST LEVEL CHK'D. | DA |
| LAST LEVEL MOD. THIS TYP. | CZ |
| LAST LEVEL BY DESIGNER. | DD |
| CHANGED FROM TYP.? Y/N | Y |

CIRCUIT MODIFICATIONS ARE NOT TO BE MADE WITHOUT AUTHORITY FROM THE OFFICE OF SIGNAL DESIGN

DES: WITT.IND.
DIG: WITT.IND.
CHK: J.J.F.
A.F.E. 00183
ID= CSL17787.12X
CSL17787.13X

UNION PACIFIC RAILROAD
BLOOMINGTON, ILLINOIS TO
VALLEY JCT., ILLINOIS
C.T.C. CIRCUITS
Office of AVP Engineering-Signal OMAHA NEBR.

DATE 4-1-02
SHEET 12 13
DWG 177.87
RTE-CSL

(REV. 7-9-00 ) (HOUSE.TYP)

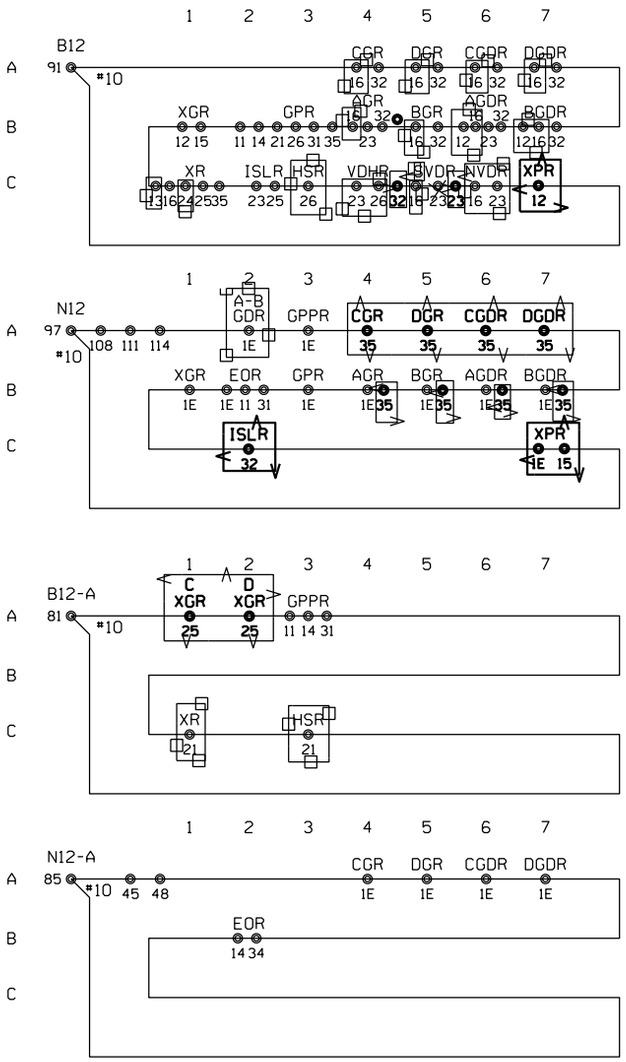


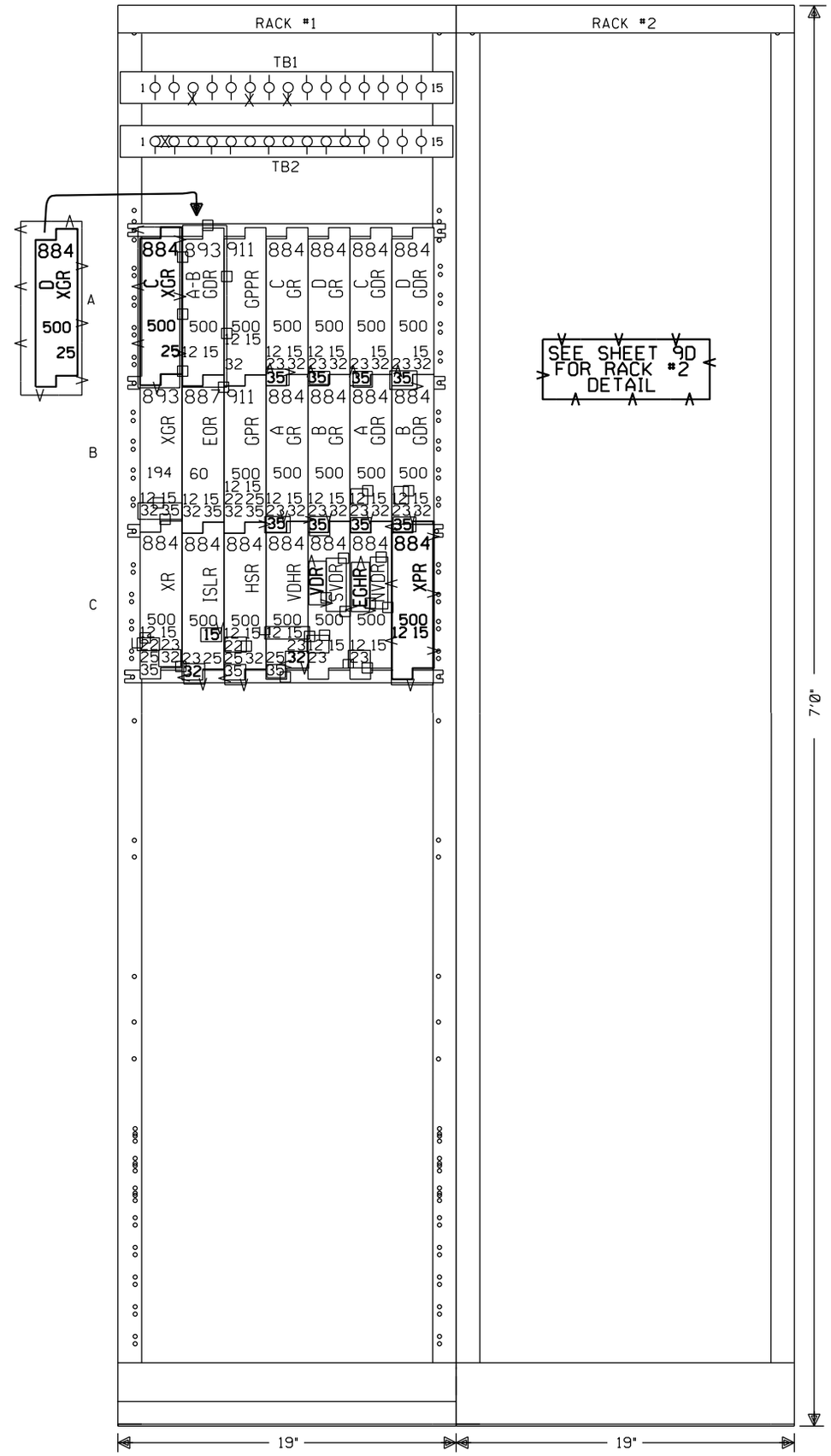


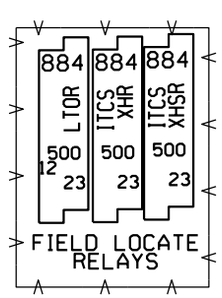


= IN

= OUT

= IN

= OUT

SHERMAN, ILLINOIS
ANDREW ROAD
M.P.177.87
SPRINGFIELD SUBDIVISION
D.O.T.#294 281X

Designed: 6/01/12
TIER 3 PHASE 2
M.P.194.00 TO
M.P.177.00
UPGRADE XINGS TO
4 QUAD WITH EGMS,
VARIOUS CP'S
Rec#: WO#: 14052
IS: / /NST/MJF

02-24-09
INSTALL MONITOR RACK
FOR XINGS
W.O. 87933 MAS

REV. 6-20-08
UPGRADED CROSSING
PROTECTION FOR THE
HIGH SPEED RAIL
PROJ. FROM MAZONIA
TO SPRINGFIELD
W.O. # 00183
REC. #15265
4-8-06 JJF
JR/WITT/WITT/JNM

| MODIFICATION LEVEL | |
|---|---|
| Q.A. LAST LEVEL CHK'D. | DA |
| LAST LEVEL MOD. THIS TYP. | CZ |
| LAST LEVEL BY DESIGNER. | DD |
| CHANGED FROM TYP.? Y/N | Y |

CIRCUIT MODIFICATIONS ARE NOT TO BE MADE WITHOUT AUTHORITY FROM THE OFFICE OF SIGNAL DESIGN

DES: WITT.IND.
DIG: WITT.IND.
CHK: J.J.F.
A.F.E. 00183
ID= CSL17787.13X
CSL17787.14X

UNION PACIFIC RAILROAD
BLOOMINGTON, ILLINOIS TO
VALLEY JCT., ILLINOIS
C.T.C. CIRCUITS
Office of AVP Engineering-Signal OMAHA NEBR.

DATE 4-1-02
SHEET 13 14
DWG 177.87
RTE-CSL

(REV. 7-9-00 ) (HOUSE.TYP)

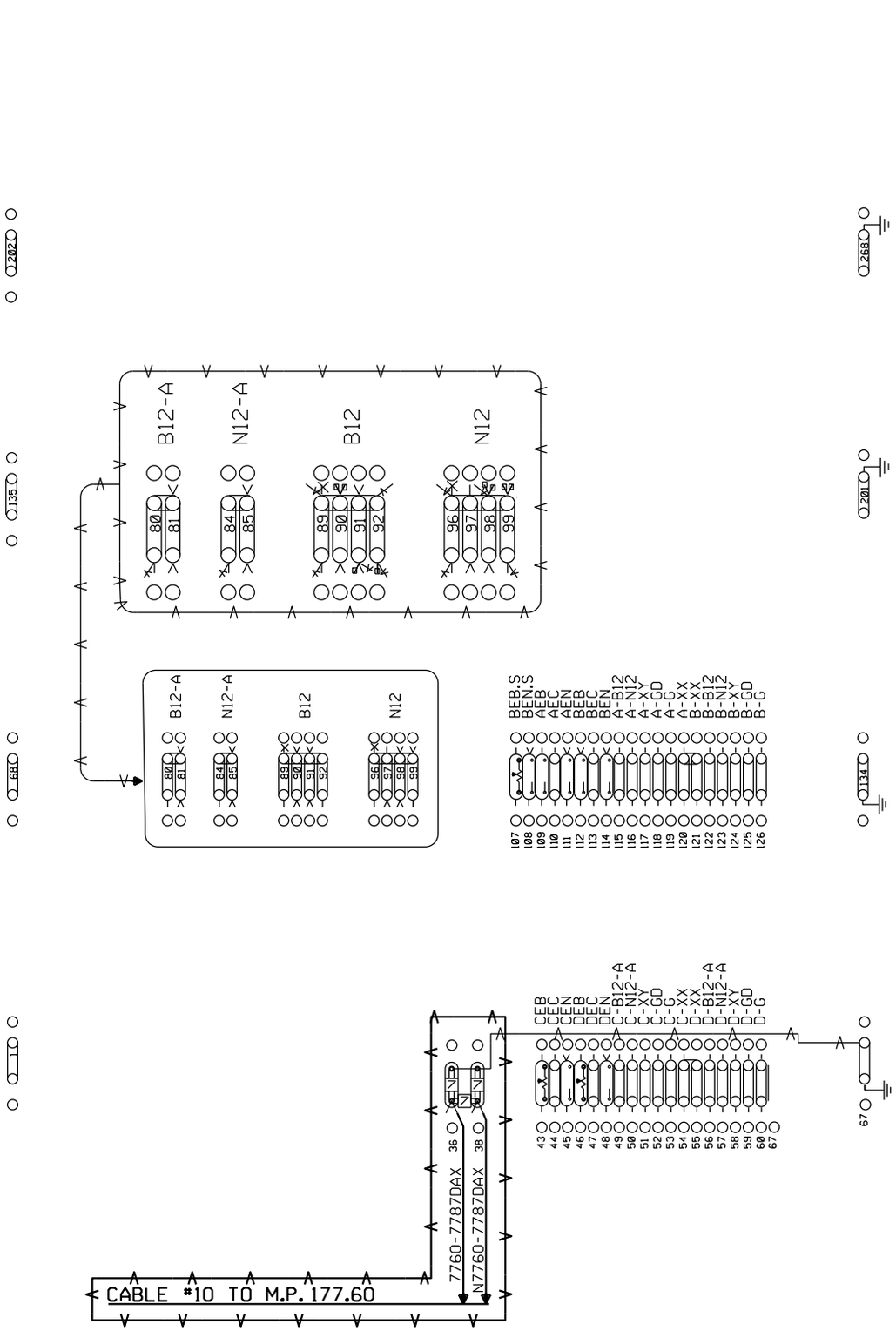


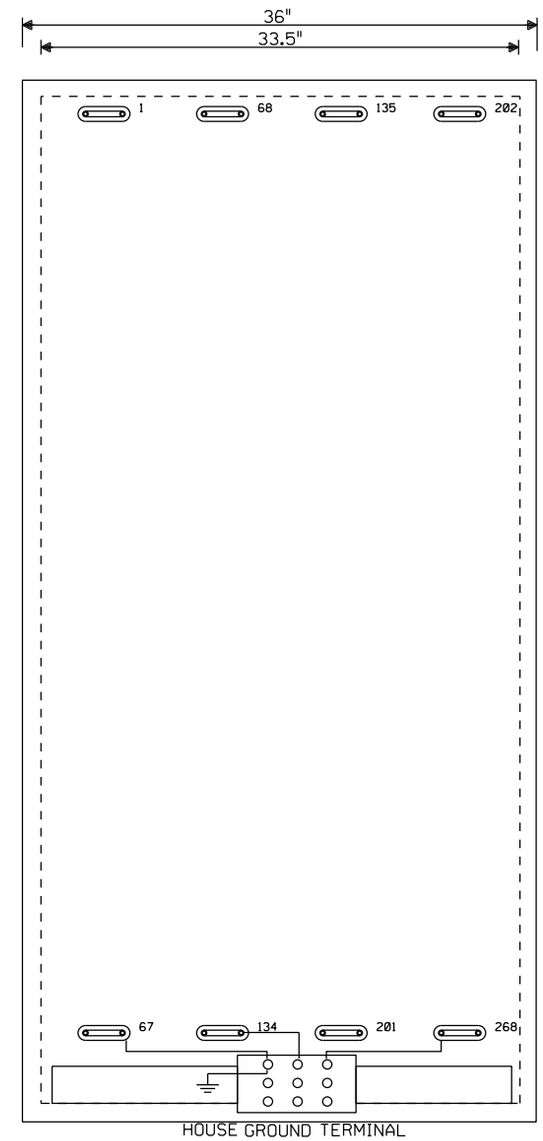


= IN

= OUT

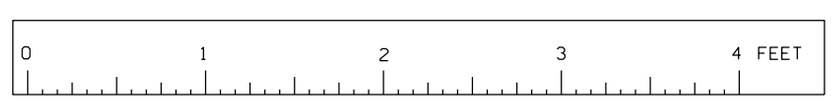


SCALE: 1.5 INCHES = 1 FOOT

= IN

= OUT

SHERMAN, ILLINOIS
ANDREW ROAD
M.P.177.87
SPRINGFIELD SUBDIVISION
D.O.T.#294 281X

| | | | |
|---|---|---|---|
| Designed: 6/01/12 TIER 3 PHASE 2 M.P.194.00 TO M.P.177.00 UPGRADE XINGS TO 4 QUAD WITH EGMS, VARIOUS CP'S Rec#: WO#:14052 IS: / /NST/MJF | 02-24-09 INSTALL MONITOR RACK FOR XINGS W.O. 87933 MAS | REV. 6-20-08 UPGRADED CROSSING PROTECTION FOR THE HIGH SPEED RAIL PROJ. FROM MAZONIA TO SPRINGFIELD W.O. # 00183 REC. #15265 4-8-06 JJF JR/WITT/WITT/JNM | MODIFICATION LEVEL: Q.A. LAST LEVEL CHK'D. DA; LAST LEVEL MOD. THIS TYP. CZ; LAST LEVEL BY DESIGNER. DD; CHANGED FROM TYP.? Y/N Y |

CIRCUIT MODIFICATIONS ARE NOT TO BE MADE WITHOUT AUTHORITY FROM THE OFFICE OF SIGNAL DESIGN

DES: WITT.IND.
DIG: WITT.IND.
CHK: J.J.F.
A.F.E. 00183
ID: CSL17Z87.14X
CSL17787.15X

UNION PACIFIC RAILROAD
BLOOMINGTON, ILLINOIS TO
VALLEY JCT., ILLINOIS
C.T.C. CIRCUITS

Office of AVP Engineering-Signal OMAHA NEBR.

DATE 4-1-02
SHEET 14 15
DWG 177.87
RTE-CSL

(REV. 7-9-00 )(HOUSE.TYP)