fre-107.95-0.dgn
31-MAR-2014

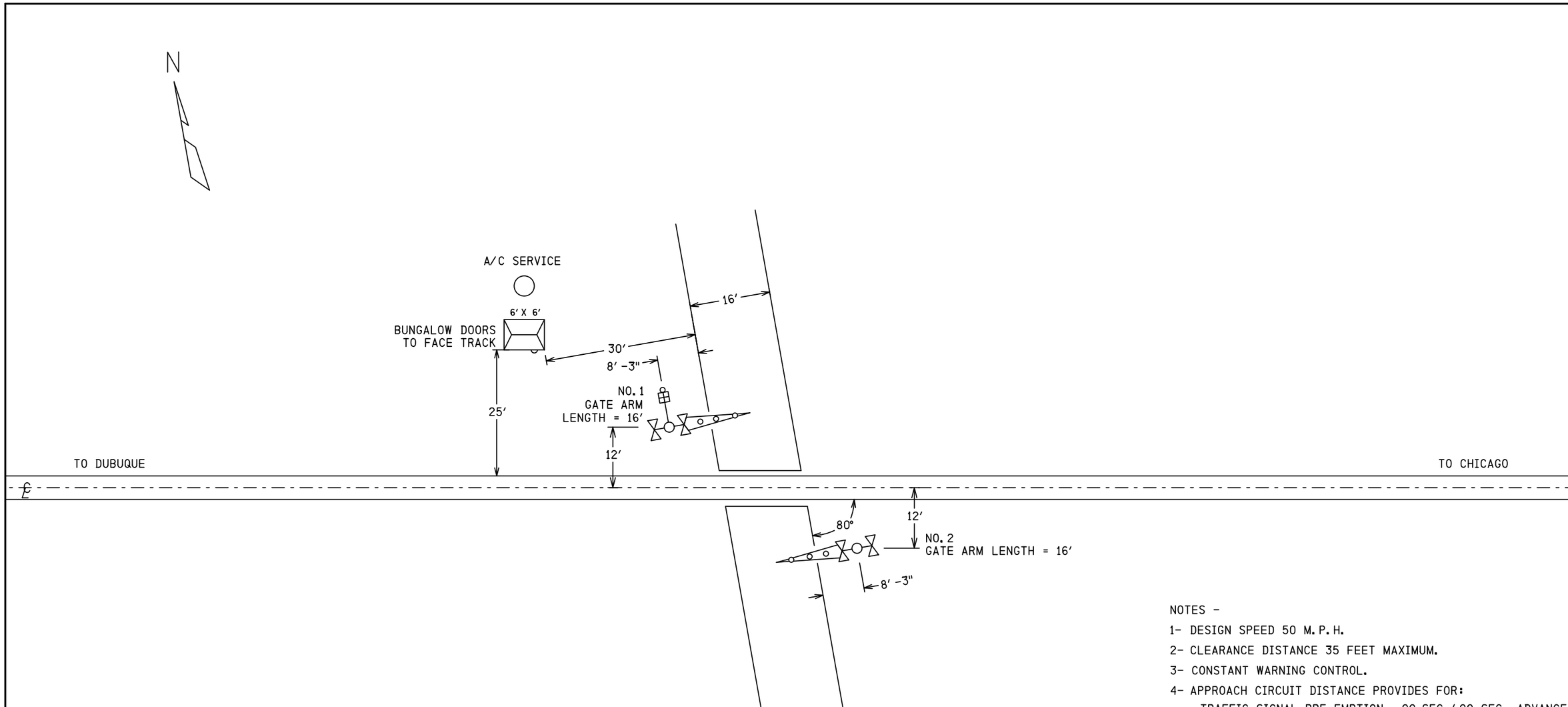

NOTES -

1- DESIGN SPEED 50 M.P.H.

2- CLEARANCE DISTANCE 35 FEET MAXIMUM.

3- CONSTANT WARNING CONTROL.

4- APPROACH CIRCUIT DISTANCE PROVIDES FOR:

TRAFFIC SIGNAL PRE-EMPTION	00 SEC. (00 SEC. ADVANCE)
MINIMUM WARNING TIME	20 SEC.
GATE DESCENT DELAY TIME	04 SEC.
BUFFER TIME	10 SEC.
EQUIPMENT REACTION TIME	05 SEC.

SII 27 JAN 2014

PROPOSED
DESIGN NO. 13-0259
RED-IN YELLOW-OUT

AS INSTALLED
DATE _____
BY _____
(PRINT NAME)

PROPOSED D	M	Y	REVISIONS	D	C	COMPLETED D	M	Y	C

REGION SOUTHERN
SUB. FREEPORT 382

SIGNALS AND COMMUNICATIONS HOMEWOOD
14 MAY 2013

DES. NAD
CH. BJW

SITUATION SKETCH
SCALE 1" = 20'
FREEPORT, IL

CHERRY HILL RD

FRE-107.95-0

DOT# 290 142N

17

SIEMENS INDUSTRY INC
LOUISVILLE DIVISION, LOUISVILLE, KY

REVISIONS			
NO.	DATE	BY	DESCRIPTION	APP. BY
1				
2				
3				
4				
5				

FLASHING LIGHT UNITS ALIGNMENT TABLE

PRIMARY FRONT LIGHTS FOR VEHICLES							
SIG #	LIGHT #	ROUNDEL		ROAD SPEED	MINIMUM DISTANCE	RECOMMENDED DISTANCE	ALIGNMENT DISTANCE
		SIZE	TYPE	MPH	FT	FT	FT
1	1,2	12"	LED	55	625	950	
2	7,8	12"	LED	55	625	950	
BACK LIGHTS FOR VEHICLES							
SIG #	LIGHT #	ROUNDEL		ROAD SPEED	MINIMUM DISTANCE	RECOMMENDED DISTANCE	ALIGNMENT DISTANCE
		SIZE	TYPE	MPH	FT	FT	FT
1	3,4	12"	LED	N/A	N/A	N/A	50
2	5,6	12"	LED	N/A	N/A	N/A	50

NOTE
FIELD IS TO PROVIDE THE ACTUAL ALIGNMENT DISTANCE AS DETERMINED BY
SCP-706: ROAD CROSSING DEVICE LIGHT UNIT ALIGNMENT PROCEDURES

FIELD TO VERIFY

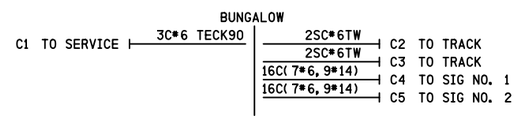

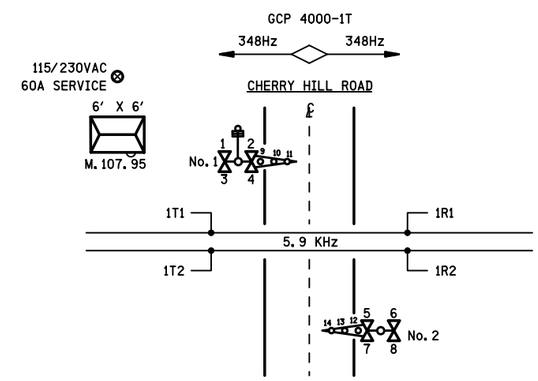

CONTENT	SHEET #
SITUATION SKETCH	0
TRACK LAYOUT & INDEX	01
GCP 4000 CHASSIS & MODULE LAYOUT	02
GCP 4000 PROGRAM INFORMATION	03
GCP 4000/SEAR III SETUP & PROGRAM	04
GCP 4000 CALIBRATION HISTORY	05
GCP 4000 TRACK 1 & 2 MODULE CONNECTIONS	06
GCP 4000 CPUII+ & VHF COMMUNICATOR	07
GCP 4000/SEARIII WITH GFT & CRTU	08
GCP 4000/SSCCIIII GATE CONTROLLERS W/ ILODS	09
GATE 1 & 2 MECH. CONTROL CIRCUITS SAFETRAN S-60	10
DC DISTRIBUTION	11
AC DISTRIBUTION	12
BUNGALOW LAYOUT TOP VIEW	13
BUNGALOW LAYOUT SIDE D & L.I.G.P. INSIDE	14
ENTRANCE BOARD L.I.G.P. OUTSIDE	15
BUNGALOW LAYOUT SIDES A, B & C	16

fre-107.95-01.dgn
31-MAR-2014

SIII 27 JAN 2014

PROPOSED
DESIGN NO. 13-0259
RED-IN YELLOW-OUT

AS INSTALLED
DATE _____
BY _____
(PRINT NAME)

PROPOSED			REVISIONS	D	C	COMPLETED			C
D	M	Y				D	M	Y	

REGION SOUTHERN
SUB. FREEPORT 382

SIGNALS AND COMMUNICATIONS HOMEWOOD
27 JANUARY 2014
DES. APL
CH. BJW

TRACK LAYOUT & INDEX

FREEPORT, IL
CHERRY HILL RD

FRE-107.95-01

DOT# 290 142N

SIEMENS INDUSTRY INC

DES.: APL	DATE: 01/27/14	JOB NO.: PICA10509
CKD.: BJW	ISSUE DATE: N/A	EST. NO.: GDXP07189
DRN.: APL	PLAN NO.: N/A	SHEET 1 OF 16
P TIME: 13:27	P DATE: 31-MAR-2014	CAD ID.: FRE-107.95-01

SIEMENS INDUSTRY INC
LOUISVILLE DIVISION, LOUISVILLE, KY

REVISIONS			
NO.	DATE	BY	DESCRIPTION	APP. BY
1				
2				
3				
4				
5				

fre-107.95-02.dgn
31-MAR-2014

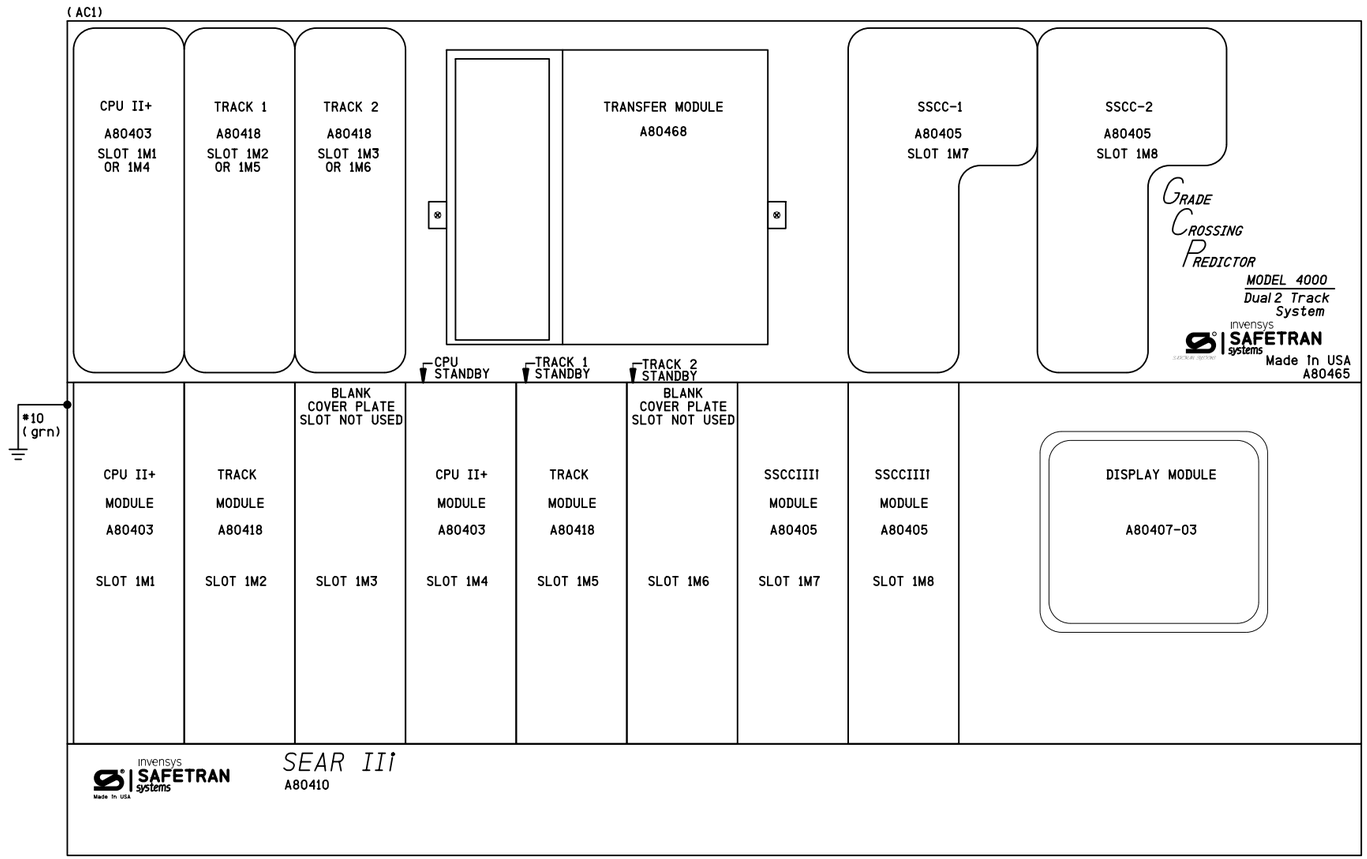

NOTES

1) DISABLE THE DISPLAY HEATER BY REMOVING JUMPER J-22 (LOCATED AT THE EDGE OF THE DISPLAY MODULE CARD THAT PLUGS INTO THE CHASSIS)

2) SET THE TRANSFER INTERVAL TIME TO 3 MINUTES BY SETTING DIPSWITCH S3 (LOCATED IN THE UPPER LEFT CORNER OF THE TRANSFER MODULE CARD) TO:

S3-0	S3-1	S3-2	S3-3	S3-4
1	1	0	0	0

WHERE 0 = UP/OPEN
1 = DOWN/CLOSED

ATTENTION!

ENSURE THE DISPLAY MODULE HEATER IS DISABLED
LEAVING THE DISPLAY HEATER ENABLED WILL REDUCE THE AMOUNT OF BATTERY STANDBY TIME IN THE EVENT OF AN AC POWER FAILURE

HEATER FUNCTION IS JUMPER SELECTABLE ON THE DISPLAY MODULE BOARD
THREE OPTIONS ARE AVAILABLE
NORMAL LCD HTR (DEFAULT)
HI CURRENT
NO JUMPER (HEATER DISABLED)

SII 27 JAN 2014

PROPOSED
DESIGN NO. 13-0259
RED-IN YELLOW-OUT

AS INSTALLED
DATE _____
BY _____
(PRINT NAME)

PROPOSED			REVISIONS	D	C	COMPLETED			C
D	M	Y				D	M	Y	

REGION SOUTHERN
SUB. FREEPORT 382

SIGNALS AND COMMUNICATIONS HOMEWOOD
27 JANUARY 2014
DES. APL
CH. BJW

GCP 4000
CHASSIS & MODULE LAYOUT
FREEPORT, IL
CHERRY HILL RD

FRE-107.95-02

DOT# 290 142N

SIEMENS INDUSTRY INC

DES.: APL	DATE: 01/27/14	JOB NO.: PICA10509	
CKD.: BJW	ISSUE DATE: N/A	EST. NO.: GDXP07189	
DRN.: APL	PLAN NO.: N/A	SHEET 2 OF 16	
P TIME: 13:28	P DATE: 31-MAR-2014	CAD ID.: FRE-107.95-02	

SIEMENS INDUSTRY INC
LOUISVILLE DIVISION, LOUISVILLE, KY

REVISIONS				
NO.	DATE	BY	DESCRIPTION	APP. BY
1				
2				
3				
4				
5				

Program Report

Location and SIN

DOT Number: 290142N
Milepost Number: 107.95
Site Name: Cherry Hill Rd

SIN: 762010010016

MCF and Template Selection

MCF Name: GCP-T6X-02-2.mcf
MCF Revision: 022
MCFCRC: 79225F13

Template = 1A:6 Trk Bi (OCCN)

Check Numbers

Office Check Number: 780519FE
Config. Check Number: 7C6DD69B
(Based on MCF Revision 022)

Program

BASIC: module configuration
Track 1/PSO 1 Slot = Track (OCCN)
Track 2/RIO 1 Slot = Not Used (OCCN)
Track 3/PSO 2 Slot = Not Used (OCCN)
Track 4/PSO 3 Slot = Not Used (OCCN)
Track 5/RIO 2 Slot = Not Used (OCCN)
Track 6/RIO 3 Slot = Not Used (OCCN)
SSCC-1 Slot = SSCC3I (OCCN)
SSCC-2 Slot = SSCC3I (OCCN)
SEAR Used = Yes (OCCN)

BASIC: MS/GCP operation
Track 1 : MS/GCP Operation = Yes (OCCN)

BASIC: Island operation
Track 1 : Island Used = Internal (OCCN)

BASIC: preemption
Preempt Logic = No (OCCN)

BASIC: radio Dax links
Radio DAX link A Used = No (OCCN)
Radio DAX link B Used = No (OCCN)

BASIC: Vital Comms links
Vital Comms link 1 Used = No (OCCN)
Vital Comms link 2 Used = No (OCCN)

PREDICTORS: track 1
Track 1 : Prime Used = Yes (OCCN)
Track 1 : Dax A Used = No (OCCN)
Track 1 : Dax B Used = No (OCCN)
Track 1 : Dax C Used = No (OCCN)
Track 1 : Dax D Used = No (OCCN)
Track 1 : Dax E Used = No (OCCN)
Track 1 : Dax F Used = No (OCCN)
Track 1 : Dax G Used = No (OCCN)

GCP: track 1
Track 1 : GCP Freq Category = Standard (Field)
Track 1 : GCP Frequency = 348 Hz (Field, TCN)
Track 1 : Approach Distance = 2580 ft (Field, TCN)
Track 1 : Uni/Bi/Sim-Bidirni = Bidirni (OCCN, TCN)
Track 1 : GCP Transmit Level = High (Field, TCN)
Track 1 : Island Connection = Isl1 (OCCN)
Track 1 : Directionally Wired = No (OCCN)
Track 1 : Island Distance = 120 ft (Field, TCN)
Track 1 : Computed Distance = 9999 ft (Field, TCN)
Track 1 : Linearization Steps = 100 (Field, TCN)

GCP: track 1 enhanced det
Track 1 : Inbound PS Sensitivity = High (Field)
Track 1 : Speed Limiting Used = Yes (Field)
Track 1 : Outbound False Act Lvl = Normal (Field)
Track 1 : Outbound PS Timer = 20 sec (Field)
Track 1 : Trailing Switch Logic = On (Field)
Track 1 : Post Joint Detn Time = 15 sec (OCCN)
Track 1 : Adv Appr Predn = No (OCCN)
Track 1 : Cancel Pickup Delay = This Isl (OCCN)

GCP: track 1 BIDAX RX
Track 1 : BIDAX To RX Appr = Not Used (OCCN)

GCP: track 1 BIDAX TX
Track 1 : BIDAX To TX Appr = Not Used (OCCN)

GCP: track 1 prime
Track 1 : Prime Warning Time = 30 sec (OCCN)
Track 1 : Prime Offset Distance = 0 ft (Field)
Track 1 : Switch MS EZ Level = 12 (OCCN)
Track 1 : Prime MS/GCP Mode = Pred (OCCN)
Track 1 : Prime Pickup Delay = 30 sec (OCCN)
Track 1 : Prime UAX = Not Used (OCCN)

GCP: track 1 pos start
Track 1 : Positive Start = Off (OCCN)
Track 1 : Sudden Shnt Det Used = No (OCCN)
Track 1 : Low EZ Detection Used = No (OCCN)

GCP: track 1 MS Control
Track 1 : MS/GCP Ctrl IP Used = No (OCCN)
Track 1 : MS Sensitivity Level = 0 (Field)
Track 1 : Compensation Level = 1300 (Field, TCN)
Track 1 : Warn Time-Ballast Comp = High (Field, TCN)
Track 1 : Low EX Adjustment = 39 (Field)
Track 1 : Bidirn Dax Passthru = No (OCCN)
Track 1 : False Act on Train Stop = No (Field)
Track 1 : EX Limiting Used = Yes (Field)
Track 1 : EZ Correction Used = Yes (Field)

ISLAND: track 1
Track 1 : Isl Frequency = 5.9 kHz (Field)
Track 1 : Pickup Delay (2s +) = 0 sec (OCCN)
Track 1 : Isl Enable IP Used = No (OCCN)

AND: track Anding
AND 1 XR Used = Yes (OCCN)
AND 2 Used = Yes (OCCN)
AND 3 Used = No (OCCN)
AND 4 Used = No (OCCN)
AND 5 Used = No (OCCN)
AND 6 Used = No (OCCN)
AND 7 Used = No (OCCN)
AND 8 Used = No (OCCN)

AND: AND 1 XR
AND 1 XR Track 1 = Prime (OCCN)
AND 1 Enable Used = Yes (OCCN)
And 1 Enable Pickup = 0 sec (OCCN)
AND 1 Enable Drop = 0 sec (OCCN)
AND 1 Wrap Used = No (OCCN)

AND: AND 2
AND 2 Track 1 = Not Used (OCCN)
AND 2 Enable Used = Yes (OCCN)
AND 2 Enable Pickup = 0 sec (OCCN)
AND 2 Enable Drop = 0 sec (OCCN)
AND 2 Wrap Used = No (OCCN)

ADVANCED: MS restart
MS/GCP Restart Used = No (OCCN)

ADVANCED: out of service
OOS Control = OOS IPs (OCCN)

ADVANCED: out of service 2
T1 OOS Control = OOS Input 1 (OCCN)
T1 OOS Controls = GCP and Island (OCCN)

ADVANCED: track wrap circuits
Wrap LOS Timer = 5 sec (OCCN)
Track 1 Wrap Used = No (OCCN)

ADVANCED: trk 1 overrides
Track 1 : All Predictors Override Used = No (OCCN)

ADVANCED: OR logic
OR 1 Used = No (OCCN)
OR 2 Used = No (OCCN)
OR 3 Used = No (OCCN)
OR 4 Used = No (OCCN)

ADVANCED: Internal I/O 1
Pass Thrus = Yes (OCCN)
Int.1 Sets = AND 2 Enable (OCCN)
Int.1 Set by = Passthru State 1 (OCCN)
Int.2 Sets = AND 2 Enable (OCCN)
Int.2 Set by = Passthru State 2 (OCCN)
Int.3 Sets = GD 1.1 (OCCN)
Int.3 Set by = Passthru State 1 (OCCN)
Int.4 Sets = GD 2.1 (OCCN)
Int.4 Set by = Passthru State 2 (OCCN)

ADVANCED: Internal I/O 2
Int.5 Sets = Not Used (OCCN)
Int.5 Set by = Not Used (OCCN)
Int.6 Sets = Not Used (OCCN)
Int.6 Set by = Not Used (OCCN)
Int.7 Sets = Not Used (OCCN)
Int.7 Set by = Not Used (OCCN)
Int.8 Sets = Not Used (OCCN)
Int.8 Set by = Not Used (OCCN)

ADVANCED: Internal I/O 3
Int.9 Sets = Not Used (OCCN)
Int.9 Set by = Not Used (OCCN)
Int.10 Sets = Not Used (OCCN)
Int.10 Set by = Not Used (OCCN)
Int.11 Sets = Not Used (OCCN)
Int.11 Set by = Not Used (OCCN)
Int.12 Sets = Not Used (OCCN)
Int.12 Set by = Not Used (OCCN)

ADVANCED: Internal I/O 4
Int.13 Sets = Not Used (OCCN)
Int.13 Set by = Not Used (OCCN)
Int.14 Sets = Not Used (OCCN)
Int.14 Set by = Not Used (OCCN)
Int.15 Sets = Not Used (OCCN)
Int.15 Set by = Not Used (OCCN)
Int.16 Sets = Not Used (OCCN)
Int.16 Set by = Not Used (OCCN)

ADVANCED: site options
Daylight Savings = On (Field)
Units = Standard (OCCN)
Maint Call Rpt IP Used = No (OCCN)
Emergency Activate IP = No (OCCN)
EZ/EX Logging = Change (Field)
EZ/EX Point Change = 3 (Field)

SSCC
Gates Used = Yes (OCCN)
SSCC1+2 GPs Coupled = Yes (OCCN)
Min Activation = 20 sec (OCCN)
Rmt Activation Cancel = 3 min (OCCN)
Bell On Gate Rising = No (OCCN)
Mute Bell On Gate Down = Yes (OCCN)
SSCCIV Controller Used = No (OCCN)

SSCC: 1
SSCC-1 Activation = AND 1 XR (OCCN)
SSCC-1 Gate Delay = 4 sec (OCCN)
SSCC-1 Number of GPs = 1 (OCCN)
SSCC-1 Number of GDs = 1 (OCCN)
SSCC 1 : Flash Rate = 55 (OCCN)
SSCC 1 : Low Battery Detection = No (Field)
SSCC 1 : Flash Sync = master (OCCN)
SSCC 1 : Invert Gate Output = No (OCCN)
SSCC 1 : Lamp Neutral Test = Off (Field)
Aux-1 Xng Ctrl Used = No (OCCN)

SSCC: 2
SSCC-2 Activation = AND 1 XR (OCCN)
SSCC-2 Gate Delay = 4 sec (OCCN)
SSCC-2 Number of GPs = 0 (OCCN)
SSCC-2 Number of GDs = 1 (OCCN)
SSCC 2 : Flash Rate = 55 (OCCN)
SSCC 2 : Low Battery Detection = No (Field)
SSCC 2 : Flash Sync = slave (OCCN)
SSCC 2 : Invert Gate Output = No (OCCN)
SSCC 2 : Lamp Neutral Test = Off (Field)
Aux-2 Xng Ctrl Used = No (OCCN)

OUTPUT: assignment page 1
OUT 1.1 = AND 1 XR (OCCN)
OUT 1.2 = AND 2 (OCCN)

INPUT: assignment page 1
IN 1.1 = Not Used (OCCN)
IN 1.2 = Not Used (OCCN)

IO: assignment SSCC
OUT GC 1 = Gate Output 1 (OCCN)
OUT GC 2 = Gate Output 2 (OCCN)
IN 7.1 = AND 1 XR Enable (OCCN)
IN 7.2 = Not Used (OCCN)
IN 7.3 = Not Used (OCCN)
IN 7.4 = Passthru State 1 (OCCN)
IN 7.5 = GP 1.1 (OCCN)
IN 8.1 = Out Of Service IP 1 (OCCN)
IN 8.2 = Not Used (OCCN)
IN 8.3 = Not Used (OCCN)
IN 8.4 = Passthru State 2 (OCCN)
IN 8.5 = Not Used (OCCN)

SEAR
SEAR Subnode = 99 (OCCN)
DI 1 = General1 (OCCN)
DI 2 = Gnd Flt Tester 1 (OCCN)
Rly 1 = Ground Fault Test (OCCN)
Rly 2 = AC Control (OCCN)

SEAR: Inputs
SP 2.1 = POK 1 (OCCN)
SP 3.1 = Not Used (OCCN)
SP 4.1 = Not Used (OCCN)
SP 5.1 = Not Used (OCCN)
SP 6.1 = Not Used (OCCN)

SEAR: slot 1-4 Inputs
IN 1.1 = Not Used (OCCN)
IN 1.2 = Not Used (OCCN)
IN 2.1 = Not Used (OCCN)
IN 2.2 = POK 2 (OCCN)
IN 3.1 = Not Used (OCCN)
IN 3.2 = Not Used (OCCN)
IN 4.1 = Not Used (OCCN)
IN 4.2 = Not Used (OCCN)

SEAR: Inputs slot 5
IN 5.1 = Not Used (OCCN)
IN 5.2 = Not Used (OCCN)

SEAR: Inputs slot 6
IN 6.1 = Not Used (OCCN)
IN 6.2 = Not Used (OCCN)

SEAR: slot 7-8 Inputs
IN 7.2 = Not Used (OCCN)
IN 7.3 = TSS 1 (OCCN)
IN 8.2 = Not Used (OCCN)
IN 8.3 = TSS 2 (OCCN)
IN 8.5 = General2 (OCCN)

SITE: programming
Radio Subnode = 1 (Field)
Field Password = Off (OCCN)
Low Battery Enabled = Off (Field)

Configuration Package File

Filename: fre-107.95.pac

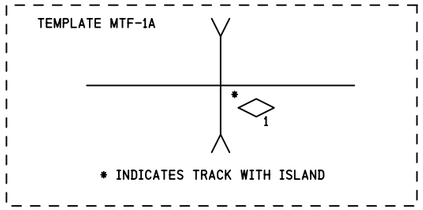

NOTES
1) DISTANCE(S) TO BE VERIFIED AT INSTALLATION
INDICATE SELECTED PROGRAMMED VALUE IF DIFFERENT THAN SHOWN
REFER TO 4000 GCP INSTRUCTION/INSTALLATION MANUAL
FOR PROGRAMMING PARAMETERS

2) PROGRAM TEXT HIGHLIGHTED IN RED INDICATES 4000 PROGRAM
MODIFICATIONS TO DEFAULT PROGRAM VALUES

3) EACH CONSTANT WARNING DEVICE SYSTEM TO BE PROGRAMMED TO
CONVERT TO A MOTION SENSOR 300 FEET FROM EDGE OF ROAD
TRAVELLED WAY
SHUNT TRACK 300 FEET FROM EDGE OF ROAD TRAVELLED WAY
AND NOTE "EZ" VALUE
PROGRAM EACH SYSTEM WITH THE INDICATED "EZ" VALUE +2

4) VERIFY SET TIMER VALUE TO MATCH ACTUAL TRAIN MOVEMENT
WITHIN THE CROSSING APPROACH CIRCUITS

SII 27 JAN 2014

PROPOSED
DESIGN NO. 13-0259
RED-IN YELLOW-OUT

AS INSTALLED
DATE _____
BY _____
(PRINT NAME)

SUBMIT CFG FILES

PROPOSED			REVISIONS	D	C	COMPLETED			C
D	M	Y				D	M	Y	

REGION SOUTHERN
SUB. FREEPORT 382
CN
SIGNALS AND COMMUNICATIONS HOMEWOOD
27 JANUARY 2014
DES. APL
CH. BJW
GCP 4000
PROGRAM INFORMATION
FREEPORT, IL
CHERRY HILL RD
FRE-107.95-03
DOT# 290 142N

SIEMENS INDUSTRY INC
DES.: APL | DATE: 01/27/14 | JOB NO.: P1CA10509
CKD.: BJW | ISSUE DATE: N/A | EST. NO.: 1QDXP07189
DRN.: APL | PLAN NO.: N/A | SHEET 3 OF 16
P TIME: 13:28 | P DATE: 31-MAR-2014 | CAD ID.: FRE-107.95-03

SIEMENS INDUSTRY INC
LOUISVILLE DIVISION, LOUISVILLE, KY

fre-107.95-03.dgn
31-MAR-2014

REVISIONS			
NO.	DATE	BY	DESCRIPTION	APP. BY
1				
2				
3				
4				
5				

TO CONFIGURE SEARII & SEARIII PRESS SITE SETUP KEY. USE ARROW KEYS TO MAKE SELECTION, PRESS ENTER AFTER SELECTION HAS BEEN MADE.

STAGE 1

PROGRAM MENU QUESTIONS	PROGRAM	OPTIONS/RANGE
DATE/TIME?	CURRENT DATE/TIME	CURRENT DATE/TIME
AUTOMATIC DST ADJUSTMENT?	YES	YES, NO
TIME ZONE?	CENTRAL	EASTERN, CENTRAL, MOUNTAIN, PACIFIC, ALASKA, HAWAII, ATLANTIC, SASKATCHEWAN, NEW FOUNLAND
SITE NAME?	CHERRY HILL RD	STREET NAME
MILE POST?	107.95	MILEAGE
DOT/CROSSING IS #?	290142N	123456A
TESTER TYPE?	CROSSING	CROSSING, WAYSIDE
DATE FORMAT?	dd-mm-yyyy	mm-dd-yyyy, dd-mm-yyyy
TEMPERATURE FORMAT?	FAHRENHEIT	FAHRENHEIT, CELSIUS
INDICATE HOLD?	0	SECONDS
SITE TYPE?		NO COM, BULLHORN, DIALUP, NODE, COLLECTOR
SITE ATCS ADDRESS?		7.RRR.LLL.GGG.99.01
OFFICE ATCS ADDRESS?		2.RRR.NN.DDDD
(FOR NODE USE) PRIMARY HOP ADDR?		7.RRR.LLL.GGG.00.01
(FOR NODE USE) BACKUP HOP ADDR1?		7.RRR.LLL.GGG.00.01
(FOR NODE USE) BACKUP HOP ADDR2?		7.RRR.LLL.GGG.00.01
(FOR COLLECTOR USE) POLL ID?		1-99
(FOR COLLECTOR USE) MODE?		GEN/ATCS, GENISYS
(FOR COLLECTOR USE) WAMS/XID?		ENABLED, DISABLE
(FOR COLLECTOR USE) OFFICE COMM. DEVICE?		DIRECT (RS232) MCM (RS232) MCM (ECHELON) SREAD SPEC (ECHELON) DIAL MODEM (RS232) S200 RADIO (RS422)
(FOR COLLECTOR USE) OFFICE PHONE NUMBER?		PHONE NUMBER OF WAMS
(FOR COLLECTOR USE) INIT STRING?		OPTIONAL HAYES MODEM INITIALIZATION STRING
FIELD COMM. DEVICE?		VHF COMM. (ECHELON) VHF COMM. (RS232) SPREAD SPEC (ECHELON) SPREAD SPEC (RS232)
USER PORT?	57600, 8, N, 1, N	BAUD, DATA BITS, PARITY, STOP BITS, FLOW CONTROL
AUX PORT?	9600, 8, N, 1, N	BAUD, DATA BITS, PARITY, STOP BITS, FLOW CONTROL

YOU WILL NOW SEE A MESSAGE "PLEASE WAIT COMPILING STAGE 1" CONTINUE TO NEXT PROGRAM MENU QUESTIONS.

NOTES:

1) ASSIGNED DTMF CODES:

ACTIVATE CROSSING (NORTH TRACK - 1T1)	14211#
DE-ACTIVATE CROSSING (NORTH TRACK - 1T1)	14210#
ACTIVATE CROSSING (MAINTENANCE)	14271#
DE-ACTIVATE CROSSING (MAINTENANCE)	14270#

2) ADDITIONAL OPTIONS: DUAL CROSSING, EXTERNAL ENTRANCE GATE CONTROLLERS.

STAGE 2

QUESTION	PROGRAM	SELECTION 1 (MINIMUM)	SELECTION 2 (MAXIMUM)	CONDITION FOR MENU DISPLAY
RESET NAMES / MODULES ?	NO	YES	NO	ALWAYS
CROSSING CONFIGURATION ?	NORMAL	NORMAL	SPLIT GATE (NOTE 2)	ALWAYS
AND1 USED AS XR?	YES	NO	YES	ALWAYS
AND2 USED AS XR?	NO	NO	YES	ALWAYS
AND3 USED AS XR?	NO	NO	YES	ALWAYS
AND4 USED AS XR?	NO	NO	YES	ALWAYS
AND5 USED AS XR?	NO	NO	YES	ALWAYS
AND6 USED AS XR?	NO	NO	YES	ALWAYS
AND7 USED AS XR?	NO	NO	YES	ALWAYS
AND8 USED AS XR?	NO	NO	YES	ALWAYS
XR CONTROLLED BY FOREIGN RR?	NO	AND1	AND8	CROSSING CONFIGURATION = SPIT GATE
ENTRANCE GATES ?	2	0	8	ALWAYS
GATE CONTROLLED BY FOREIGN RR?	NONE	NONE	TSS4	CROSSING CONFIGURATION = SPIT GATE
GATE DESCENT TIME (SECONDS)	11	7	20	GATES > 0
GATE POSITION FAIL TIME (SECONDS) ?	17	10	60	GATES > 0
BATTERY BANKS ?	2	1	3	ALWAYS
BATT MON USED ?	NO	NO	YES	ALWAYS
INTERNAL CROSSING CONTROLLERS ?	2	0	2	ALWAYS
EXTERNAL CROSSING CONTROLLERS ?	0	0	2	CROSSING CONTROLLER = YES
ALLOW DTMF CONTROL ?	YES	NO	YES	ALWAYS
COUNTRY	US	CANADA	US	ALLOW DTMF CONTROL = YES
DTMF CONTROL WITH PREMPTION ?	NO	NO	YES	ALLOW DTMF CONTROL = YES
POK ANNOUNCEMENT TO VHF ?	NO	NO	YES	ALLOW DTMF CONTROL = YES
VHF VOICE CHANNEL ?	1	1	8	ALLOW DTMF CONTROL = YES
VHF DATA CHANNEL ?	1	1	8	ALLOW DTMF CONTROL = YES
DIGIT #1 ?	1	0	9	ALLOW DTMF CONTROL = YES
DIGIT #2 ?	4	0	9	ALLOW DTMF CONTROL = YES
DIGIT #3 ?	2	0	9	ALLOW DTMF CONTROL = YES
DIGIT #4 ?	N/A	0	9	ALLOW DTMF CONTROL = YES
DIGIT #5 ?	N/A	0	9	ALLOW DTMF CONTROL = YES
TIME-OUT FOR DTMF REQUEST #1 ?	180	0	240	ALLOW DTMF CONTROL = YES
TIME-OUT FOR DTMF REQUEST #2 ?	0	0	240	ALLOW DTMF CONTROL = YES
TIME-OUT FOR DTMF REQUEST #3 ?	0	0	240	ALLOW DTMF CONTROL = YES
TIME-OUT FOR DTMF REQUEST #4 ?	0	0	240	ALLOW DTMF CONTROL = YES

STAGE 2 CONT'D

QUESTION	PROGRAM	SELECTION 1 (MINIMUM)	SELECTION 2 (MAXIMUM)	CONDITION FOR MENU DISPLAY
TIME-OUT FOR DTMF REQUEST #5 ?	0	0	240	ALLOW DTMF CONTROL = YES
TIME-OUT FOR DTMF REQUEST #6 ?	0	0	240	ALLOW DTMF CONTROL = YES
TIME-OUT FOR DTMF REQUEST #7 ?	180	0	240	ALLOW DTMF CONTROL = YES
ISLAND RELEASE DTMF REQUEST #1 ?	1	0	6	TIME-OUT FOR DTMF REQUEST #1 > 0
ISLAND RELEASE DTMF REQUEST #2 ?	0	0	6	TIME-OUT FOR DTMF REQUEST #2 > 0
ISLAND RELEASE DTMF REQUEST #3 ?	0	0	6	TIME-OUT FOR DTMF REQUEST #3 > 0
ISLAND RELEASE DTMF REQUEST #4 ?	0	0	6	TIME-OUT FOR DTMF REQUEST #4 > 0
ISLAND RELEASE DTMF REQUEST #5 ?	0	0	6	TIME-OUT FOR DTMF REQUEST #5 > 0
ISLAND RELEASE DTMF REQUEST #6 ?	0	0	6	TIME-OUT FOR DTMF REQUEST #6 > 0
ISLAND RELEASE DTMF REQUEST #7 ?	0	0	6	TIME-OUT FOR DTMF REQUEST #7 > 0
ILOD MODULES ?	2	0	4	ALWAYS
ANY LED BULBS USED ?	YES	NO	YES	ILOD MODULES > 0
AUTO INSPECTION ?	NO	YES	NO	ALWAYS
BELL SENSORS ?	1	0	8	ALWAYS
BELL SENSORS TSS1 ?	YES	NO	YES	BELL SENSORS > 0
BELL SENSORS TSS2 ?	NO	NO	YES	BELL SENSORS > 0
BELL SENSORS TSS3 ?	NO	NO	YES	BELL SENSORS > 0
BELL SENSORS TSS4 ?	NO	NO	YES	BELL SENSORS > 0
BELL SENSORS TSS5 ?	NO	NO	YES	BELL SENSORS > 0
BELL SENSORS TSS6 ?	NO	NO	YES	BELL SENSORS > 0
BELL SENSORS TSS7 ?	NO	NO	YES	BELL SENSORS > 0
BELL SENSORS TSS8 ?	NO	NO	YES	BELL SENSORS > 0
BELL ON ?	GATES LOWERING	GATES LOWERING		BELL SENSORS > 0
		GATES MOVING		
		ALWAYS		
BATTERY PERCENT FOR ALARM ?	85	0	100	ALWAYS
GFT'S ?	YES	YES	NO	ALWAYS
BATTERIES ON GFT1 ?	2	1	2	GFT'S = YES
GATE UP SOURCE ?	GP	TSS	GP	GATE > 0
GATE DOWN SOURCE ?	GD	TIP , TSS	GD	GATES > 0
USE CELL MODEM NON-CRITICAL FEATURE ?	NO	NO	YES	ALWAYS
FULL APPROACH MOVE ALARMS ?	ACTIVATE	ACTIVATE		ALWAYS
		DO NOT ACTIVATE		

YOU WILL NOW SEE A MESSAGE "PLEASE WAIT COMPILING STAGE 2" CONTINUE TO NEXT PROGRAM MENU QUESTIONS.

STAGE 3

PROGRAM MENU QUESTIONS	
EDIT DIGITAL INPUTS	NO
EDIT BATTERIES	NO
EDIT RELAYS	NO
EDIT TEST LEDS	NO
EDIT ILOD SENSORS	NO
EDIT VHF SETTINGS	NO
GCP4K ATCS SUBNODE?	16

SAVE CONFIGURATION

fre-107.95-04.dgn
31-MAR-2014

SIEMENS INDUSTRY INC

DES.: APL	DATE: 01/27/14	JOB NO.: PICA10509	
CKD.: BJW	ISSUE DATE: N/A	EST. NO. :1QDXP0189	
DRN.: APL	PLAN NO. :N/A	SHEET 4 OF 16	
P TIME:13:28	P DATE: 31-MAR-2014	CAD ID.: FRE-107.95-04	

SII 27 JAN 2014

PROPOSED
DESIGN NO. 13-0259
RED-IN YELLOW-OUT

AS INSTALLED
DATE _____
BY _____
(PRINT NAME)

SEARIII EXECUTIVE 9V725 REV. A01U, SEARIII APPLICATION 9VC45 REV. A01A

PROPOSED D	M	Y	REVISIONS	D	C	COMPLETED D	M	Y	C

REGION SOUTHERN
SUB. FREEPORT 382

SIGNALS AND COMMUNICATIONS HOMEWOOD
27 JANUARY 2014
DES. APL
CH. BJW

GCP 4000/SEAR III
SETUP & PROGRAM
FREEPORT, IL

CHERRY HILL RD

FRE-107.95-04

DOT# 290 142N

SIEMENS INDUSTRY INC
LOUISVILLE DIVISION, LOUISVILLE, KY

GCP 4000
CALIBRATION HISTORY

INITIAL SET UP BY: _____ DATE: _____

		APPROACH DISTANCE CALIBRATION										LINEARIZATION CALIBRATION	
		EZ/EX VALUES (TRACK UNOCCUPIED)				HARD WIRE SHUNT AT TERMINATION SHUNT				COMPUTED APPROACH DISTANCE		LINEARIZATION STEP VALUE	
		EZ		EX		EZ		EX					
		NRML	STBY	NRML	STBY	NRML	STBY	NRML	STBY	NRML	STBY	NRML	STBY
WEST	TRACK 1												
EAST	TRACK 1												

GCP 4000
CALIBRATION HISTORY

INITIAL SET UP BY: _____ DATE: _____

		APPROACH DISTANCE CALIBRATION										LINEARIZATION CALIBRATION	
		EZ/EX VALUES (TRACK UNOCCUPIED)				HARD WIRE SHUNT AT TERMINATION SHUNT				COMPUTED APPROACH DISTANCE		LINEARIZATION STEP VALUE	
		EZ		EX		EZ		EX					
		NRML	STBY	NRML	STBY	NRML	STBY	NRML	STBY	NRML	STBY	NRML	STBY
WEST	TRACK 1												
EAST	TRACK 1												

GCP 4000
CALIBRATION HISTORY

INITIAL SET UP BY: _____ DATE: _____

		APPROACH DISTANCE CALIBRATION										LINEARIZATION CALIBRATION	
		EZ/EX VALUES (TRACK UNOCCUPIED)				HARD WIRE SHUNT AT TERMINATION SHUNT				COMPUTED APPROACH DISTANCE		LINEARIZATION STEP VALUE	
		EZ		EX		EZ		EX					
		NRML	STBY	NRML	STBY	NRML	STBY	NRML	STBY	NRML	STBY	NRML	STBY
WEST	TRACK 1												
EAST	TRACK 1												

REVISIONS			
NO.	DATE	BY	DESCRIPTION	APP. BY
1				
2				
3				
4				
5				

SIII 27 JAN 2014

PROPOSED
DESIGN NO. 13-0259
RED-IN YELLOW-OUT

AS INSTALLED
DATE _____
BY _____
(PRINT NAME)

PROPOSED D	M	Y	REVISIONS	D	C	COMPLETED D	M	Y	C

REGION SOUTHERN
SUB. FREEPORT 382

SIGNALS AND COMMUNICATIONS HOMEWOOD
27 JANUARY 2014
DES. APL
CH. BJW

GCP 4000
CALIBRATION HISTORY
FREEPORT, IL
CHERRY HILL RD

FRE-107.95-05

DOT# 290 142N

SIEMENS INDUSTRY INC
DES.: APL | DATE: 01/27/14 | JOB NO.: PICA10509
CKD.: BJW | ISSUE DATE: N/A | EST. NO.: 1QDXP07189
DRN.: APL | PLAN NO.: N/A | SHEET 5 OF 16
P TIME: 13:28 | P DATE: 31-MAR-2014 | CAD ID.: FRE-107.95-05

SIEMENS INDUSTRY INC
LOUISVILLE DIVISION, LOUISVILLE, KY

fre-107.95-05.dgn
31-MAR-2014

REVISIONS			
NO.	DATE	BY	DESCRIPTION	APP. BY
1				
2				
3				
4				
5				

fre-107.95-06.dgn
31-MAR-2014

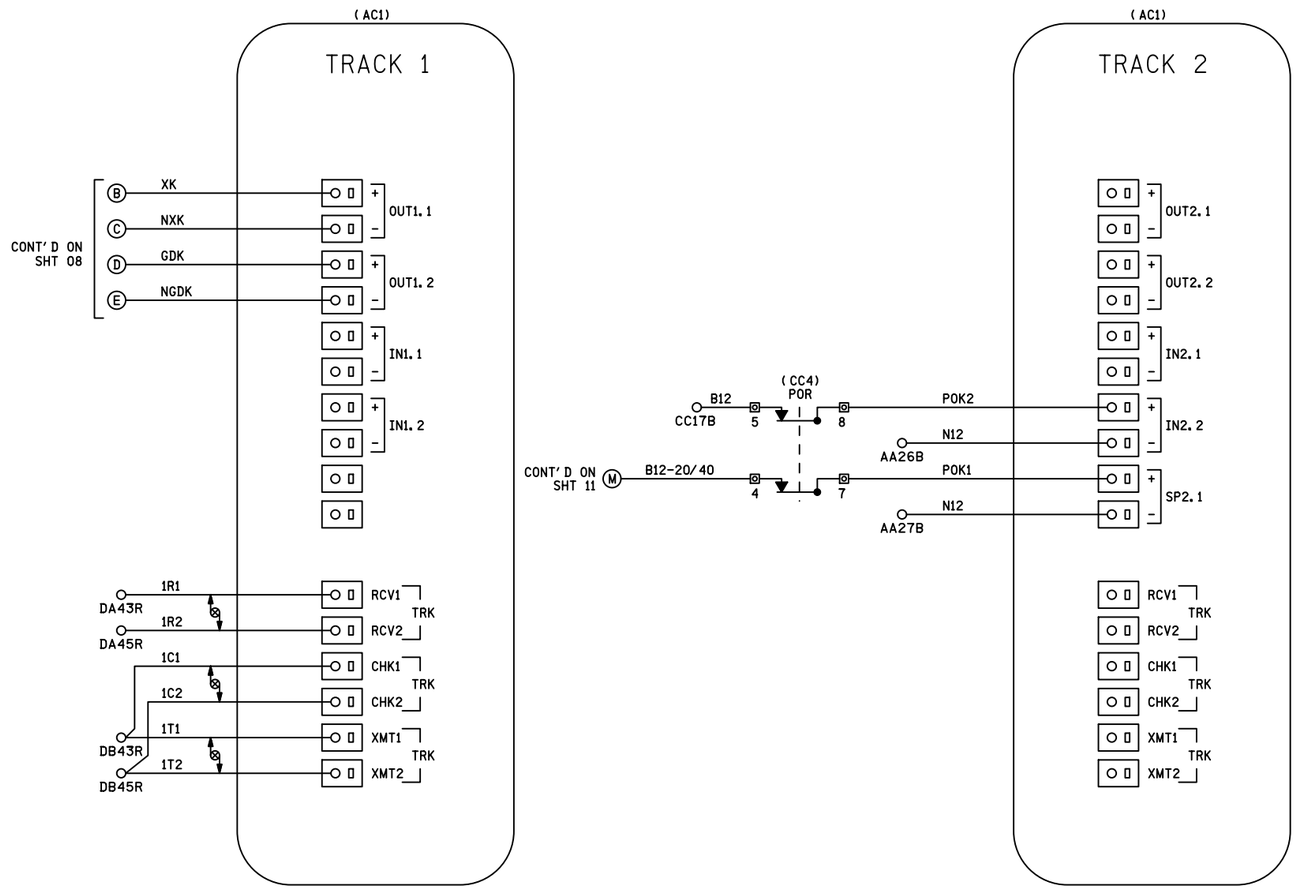

NOTES
1) ALL WIRING #16 AWG UNLESS OTHERWISE NOTED

DENOTES TWISTED PAIR

SII 27 JAN 2014

PROPOSED
DESIGN NO. 13-0259
RED-IN YELLOW-OUT

AS INSTALLED
DATE _____
BY _____
(PRINT NAME)

PROPOSED			REVISIONS	D	C	COMPLETED			C
D	M	Y				D	M	Y	

REGION SOUTHERN
SUB. FREEPORT 382

SIGNALS AND COMMUNICATIONS HOMEWOOD
27 JANUARY 2014
DES. APL
CH. BJW

GCP 4000
TRACK 1 & 2 MODULE CONNECTIONS
FREEPORT, IL
CHERRY HILL RD

FRE-107.95-06

DOT# 290 142N

SIEMENS INDUSTRY INC
LOUISVILLE DIVISION, LOUISVILLE, KY

SIEMENS INDUSTRY INC

DES.: APL	DATE: 01/27/14	JOB NO.: PICA10509
CKD.: BJW	ISSUE DATE: N/A	EST. NO.: GDXP07189
DRN.: APL	PLAN NO.: N/A	SHEET 6 OF 16
P TIME: 13:28	P DATE: 31-MAR-2014	CAD ID.: FRE-107.95-06

REVISIONS			
NO.	DATE	BY	DESCRIPTION	APP. BY
1				
2				
3				
4				
5				

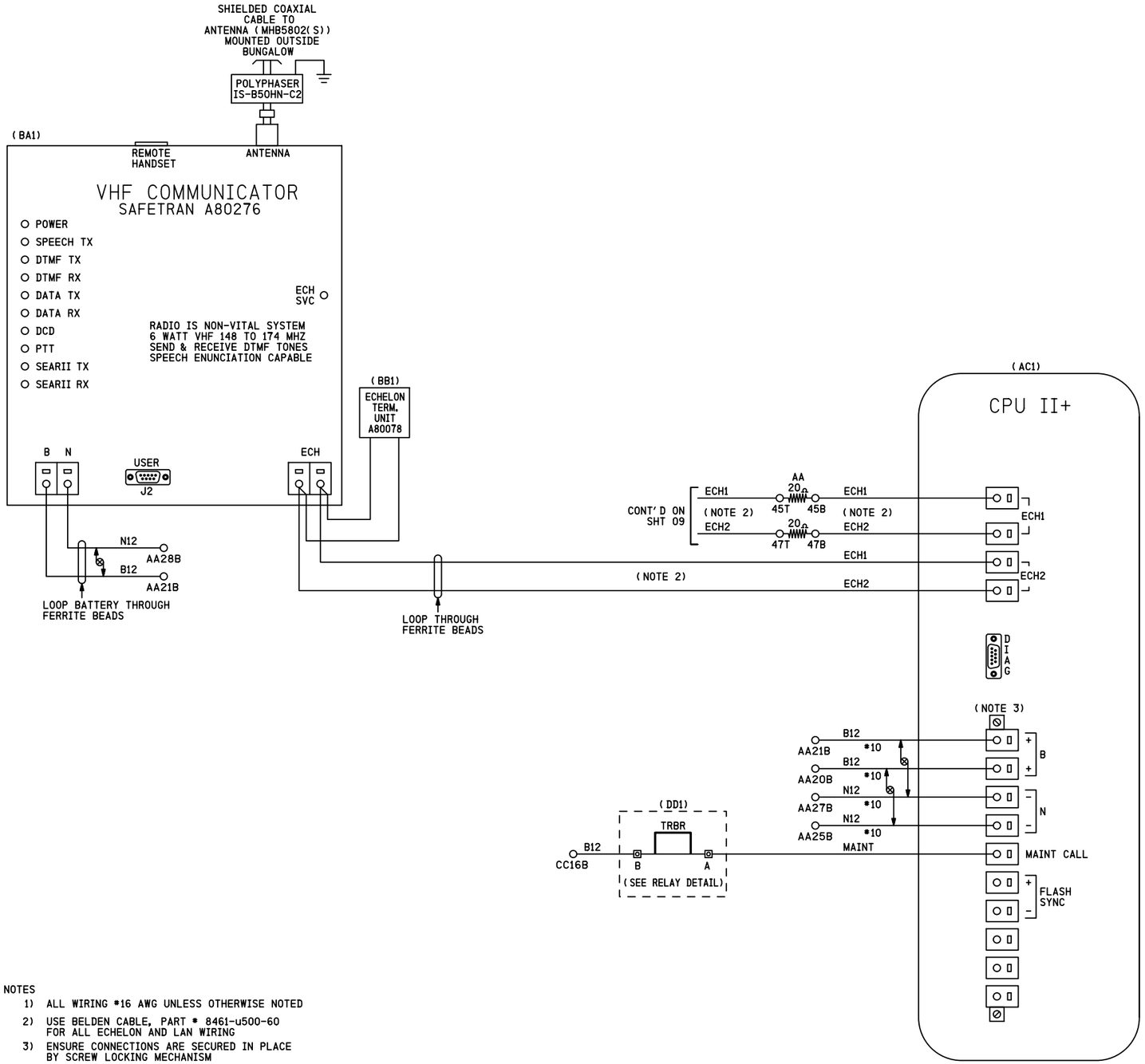

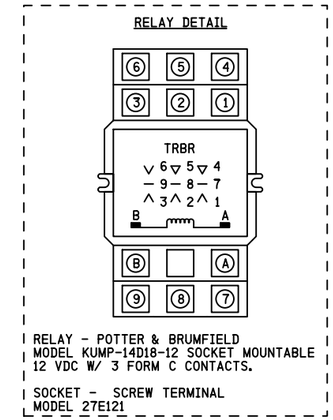

NOTES

1) ALL WIRING #16 AWG UNLESS OTHERWISE NOTED
2) USE BELDEN CABLE, PART # 8461-u500-60 FOR ALL ECHELON AND LAN WIRING
3) ENSURE CONNECTIONS ARE SECURED IN PLACE BY SCREW LOCKING MECHANISM

DENOTES TWISTED PAIR

SII 27 JAN 2014

PROPOSED
DESIGN NO. 13-0259
RED-IN YELLOW-OUT

AS INSTALLED
DATE _____
BY _____
(PRINT NAME)

PROPOSED			REVISIONS	D	C	COMPLETED			C
D	M	Y				D	M	Y	

REGION SOUTHERN
SUB. FREEPORT 382

SIGNALS AND COMMUNICATIONS HOMEWOOD
27 JANUARY 2014
DES. APL
CH. BJW

GCP 4000
CPUII+ & VHF COMMUNICATOR
FREEPORT, IL
CHERRY HILL RD

FRE-107.95-07

DOT# 290 142N

SIEMENS INDUSTRY INC

DES.: APL	DATE: 01/27/14	JOB NO.: PICA10509	
CKD.: BJW	ISSUE DATE: N/A	EST. NO.: GDXP07189	
DRN.: APL	PLAN NO.: N/A	SHEET 7 OF 16	
P TIME: 13:28	P DATE: 31-MAR-2014	CAD ID.: FRE-107.95-07	

SIEMENS INDUSTRY INC
LOUISVILLE DIVISION, LOUISVILLE, KY

fre-107.95-07.dgn
31-MAR-2014

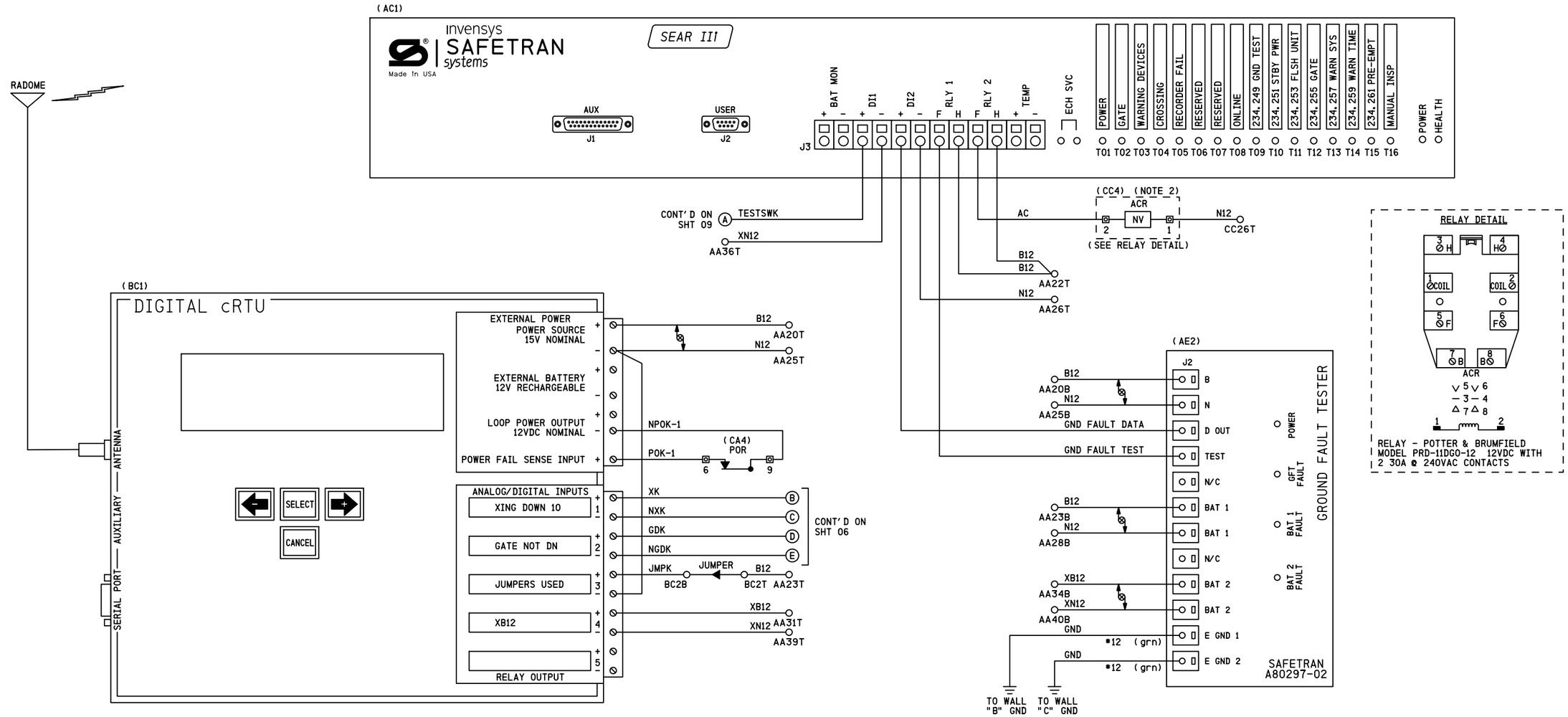

CONFIGKEY:	30
MODEL:	C06C/2ANA V2.3
SERIAL #:	
SITE IDENTIFIER:	DOT# 290 142N

* FIELD TO PROVIDE SERIAL *

	LOW ALARM	RETURN	HIGH ALARM	RETURN
B12	11.6	12.6	15.6	14.6
XB12	13.8	14.8	17.8	16.8

NOTES

1) ALL WIRING #16 AWG UNLESS OTHERWISE NOTED
2) PART OF SEARIII POWER CONTROL AND INDICATION RELAY JUNCTION BOX

⊗ DENOTES TWISTED PAIR

SII 27 JAN 2014

PROPOSED
DESIGN NO. 13-0259
RED-IN YELLOW-OUT

AS INSTALLED
DATE _____
BY _____
(PRINT NAME)

PROPOSED D	M	Y	REVISIONS	D	C	COMPLETED D	M	Y	C

REGION SOUTHERN
SUB. FREEPORT 382

SIGNALS AND COMMUNICATIONS HOMEWOOD
DES. APL
27 JANUARY 2014
CH. BJW

GCP 4000
SEAR III WITH GFT & CRTU
FREEPORT, IL
CHERRY HILL RD

FRE-107.95-08

DOT# 290 142N

REVISIONS				
NO.	DATE	BY	DESCRIPTION	APP. BY
1				
2				
3				
4				
5				

SIEMENS INDUSTRY INC

DES.: APL	DATE: 01/27/14	JOB NO.: PICA10509	
CKD.: BJW	ISSUE DATE: N/A	EST. NO.: GDXP07189	
DRN.: APL	PLAN NO.: N/A	SHEET 8 OF 16	
P TIME: 13:28	P DATE: 31-MAR-2014	CAD ID.: FRE-107.95-08	

SIEMENS INDUSTRY INC
LOUISVILLE DIVISION, LOUISVILLE, KY

fre-107.95-08.dgn
31-MAR-2014

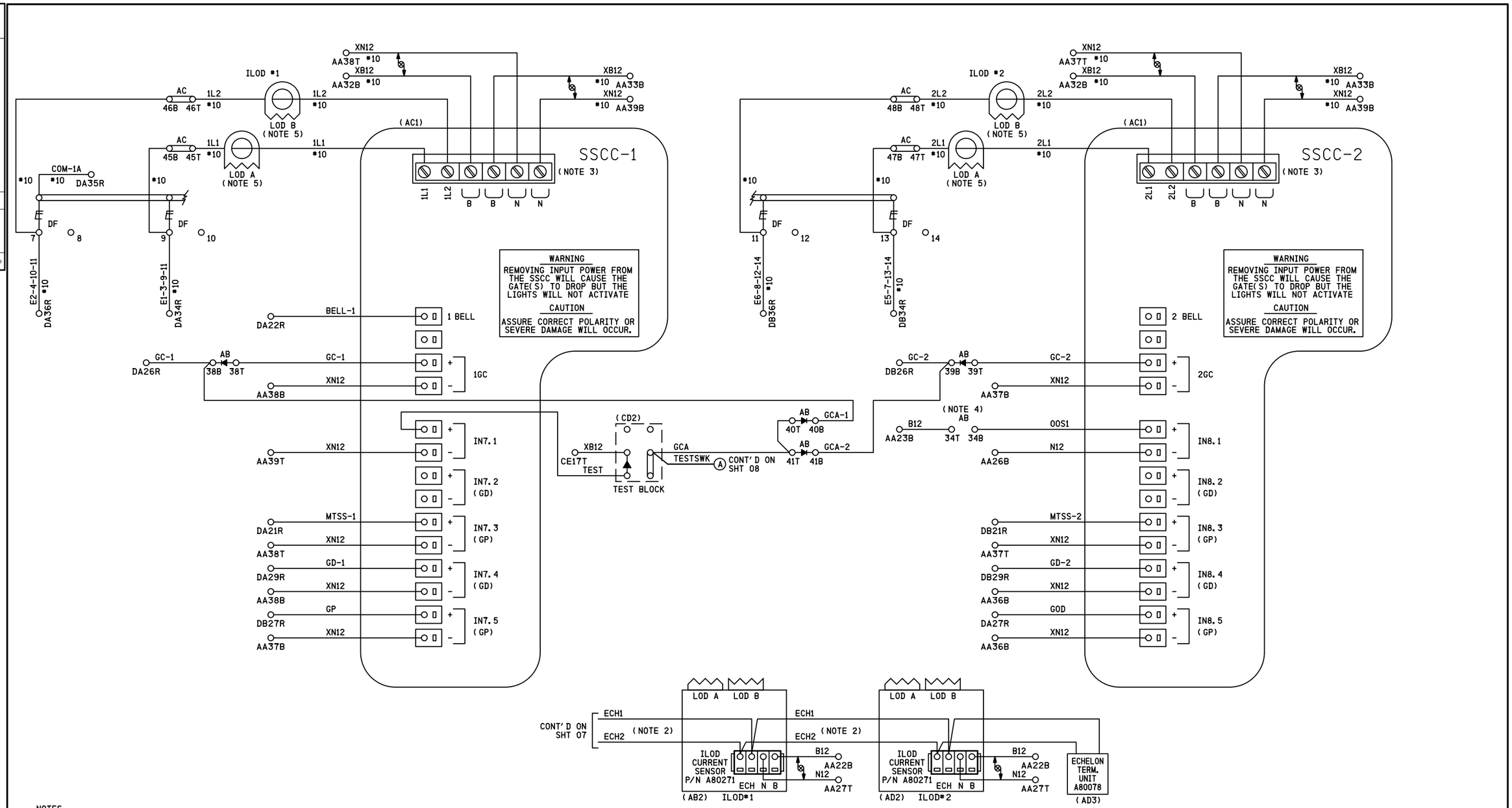

NOTES

1) ALL WIRING TO BE #16 AWG UNLESS OTHERWISE NOTED
2) USE BELDEN CABLE, PART # 8461-u500-60 FOR ALL ECHELON AND LAN WIRING
3) ENSURE CONNECTIONS ARE SECURED IN PLACE BY SCREW LOCKING MECHANISM
4) TO TAKE TRACK 1 (T1) OUT OF SERVICE, JUMPER AB34T TO AB34B
5) LOOP WIRE THROUGH LOD TWO (2) TIMES

DENOTES RECTIFIER, SAFETRAN PART # 8002A299006

DENOTES TWISTED PAIR

SII 27 JAN 2014

PROPOSED
DESIGN NO. 13-0259
RED-IN YELLOW-OUT

AS INSTALLED
DATE
BY
(PRINT NAME)

PROPOSED D	M	Y	REVISIONS	D	C	COMPLETED D	M	Y	C

REGION SOUTHERN
SUB. FREEPORT 382

SIGNALS AND COMMUNICATIONS HOMEWOOD
DES. APL
27 JANUARY 2014
CH. BJW

GCP 4000/SSCCIIII
GATE CONTROLLERS W/ ILODS
FREEPORT, IL

CHERRY HILL RD

FRE-107.95-09

DOT# 290 142N

REVISIONS			
NO.	DATE	BY	DESCRIPTION	APP. BY
1				
2				
3				
4				
5				

SIEMENS INDUSTRY INC

DES.: APL	DATE: 01/27/14	JOB NO.: PICA10509	
CKD.: BJW	ISSUE DATE: N/A	EST. NO.: GDXP07189	
DRN.: APL	PLAN NO.: N/A	SHEET 9 OF 16	
P TIME: 13:28	P DATE: 31-MAR-2014	CAD ID.: FRE-107.95-09	

SIEMENS INDUSTRY INC
LOUISVILLE DIVISION, LOUISVILLE, KY

fre-107.95-09.dgn
31-MAR-2014

CONTACT	CLOSED AT	FUNCTION
6	70° -90°	POWER DOWN CONTROL
7	0° -89°	POWER UP CONTROL
8	83° -90°	FLASHING LGT. CONTROL
9	5° -90°	BELL CONTROL
10	0° -5°	GATE DOWN INDICATION
11	N/A	SPARE
12	N/A	SPARE

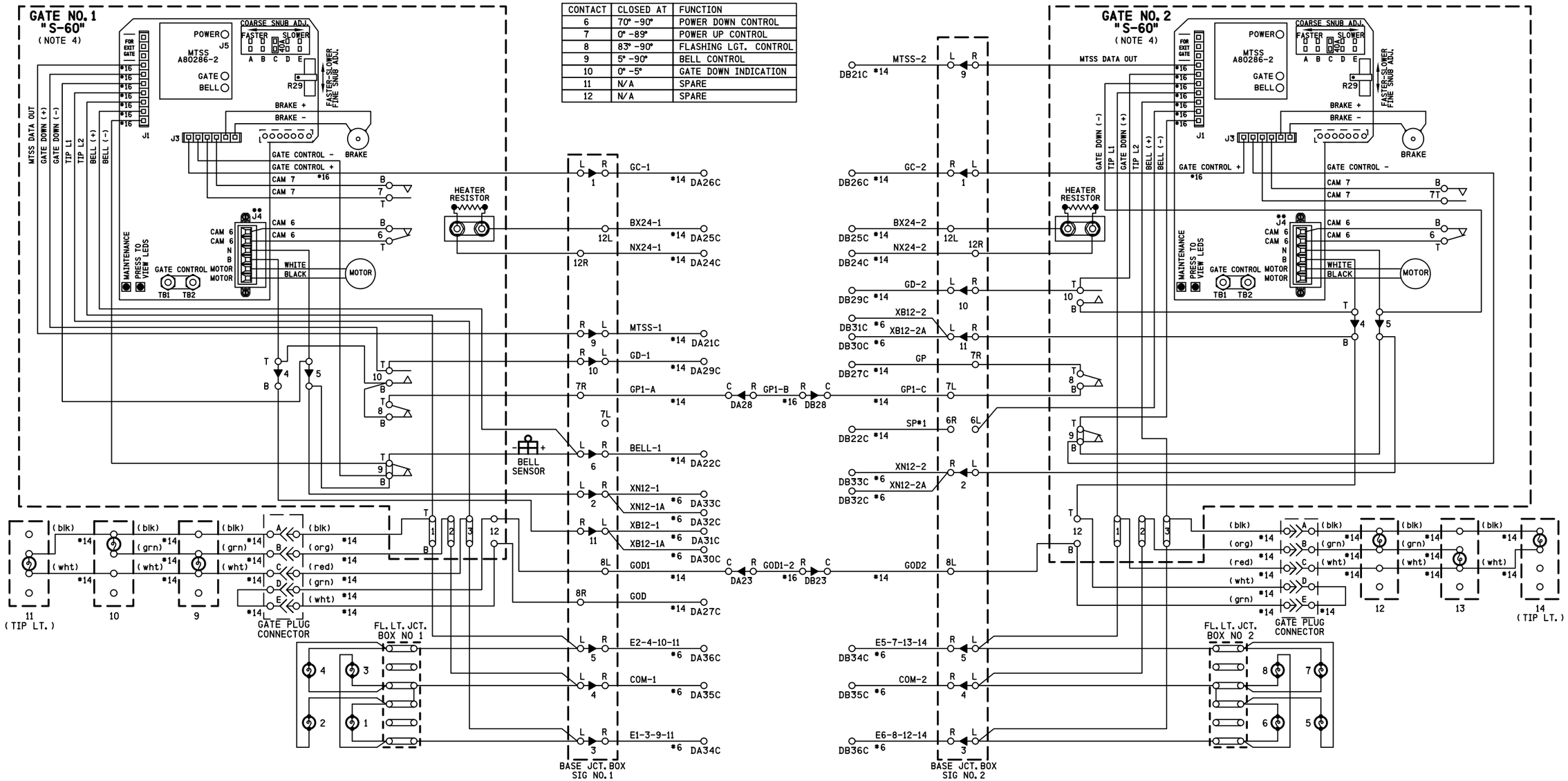

NOTES

1) ON GATE No. 1 ADD JUMPER BETWEEN TERMINALS:
   ADD JUMPER BETWEEN TERMINAL 4T & 10B,
   ADD JUMPER BETWEEN TERMINAL 8B & 10B,
   ADD JUMPER BETWEEN TERMINAL 5B & 9B
2) ON GATE No. 2 ADD JUMPER BETWEEN TERMINALS:
   ADD JUMPER BETWEEN TERMINAL 4T & 10B,
   ADD JUMPER BETWEEN TERMINAL 5B & 9B,
   ADD JUMPER BETWEEN TERMINAL 4B & 12T
3) ALL WIRING #10 AWG UNLESS OTHERWISE NOTED
4) GATE DESCENT TIME (RELEASE FROM VERTICAL TO FULLY HORIZONTAL) TO BE WITHIN 11 SECONDS
5) BELL CUT-OUT (5° -90°) WHEN REQUIRED REMOVE STRAP BETWEEN 9B AND 9T
6) ENSURE ALL TERMINALS HAVE TWO SHOULDER NUTS

SII 27 JAN 2014

PROPOSED
DESIGN NO. 13-0259
RED-IN YELLOW-OUT

AS INSTALLED
DATE _____
BY _____
(PRINT NAME)

REVISIONS				
NO.	DATE	BY	DESCRIPTION	APP. BY
1				
2				
3				
4				
5				

PROPOSED			REVISIONS	D	C	COMPLETED			C
D	M	Y				D	M	Y	

REGION SOUTHERN
SUB. FREEPORT 382
SIGNALS AND COMMUNICATIONS HOMEWOOD
DES. APL
27 JANUARY 2014
CH. BJW
GATE 1 & 2 MECH. CONTROL CIRCUITS
SAFETRAN S-60
FREEPORT, IL
CHERRY HILL RD
FRE-107.95-10

DOT# 290 142N

SIEMENS INDUSTRY INC
DES.: APL | DATE: 01/27/14 | JOB NO.: PICA10509
CKD.: BJW | ISSUE DATE: N/A | EST. NO.: 0DXP07189
DRN.: APL | PLAN NO.: N/A | SHEET 10 OF 16
P TIME: 13:28 | P DATE: 31-MAR-2014 | CAD ID.: FRE-107.95-10

SIEMENS INDUSTRY INC
LOUISVILLE DIVISION, LOUISVILLE, KY

fre-107.95-10.dgn
31-MAR-2014

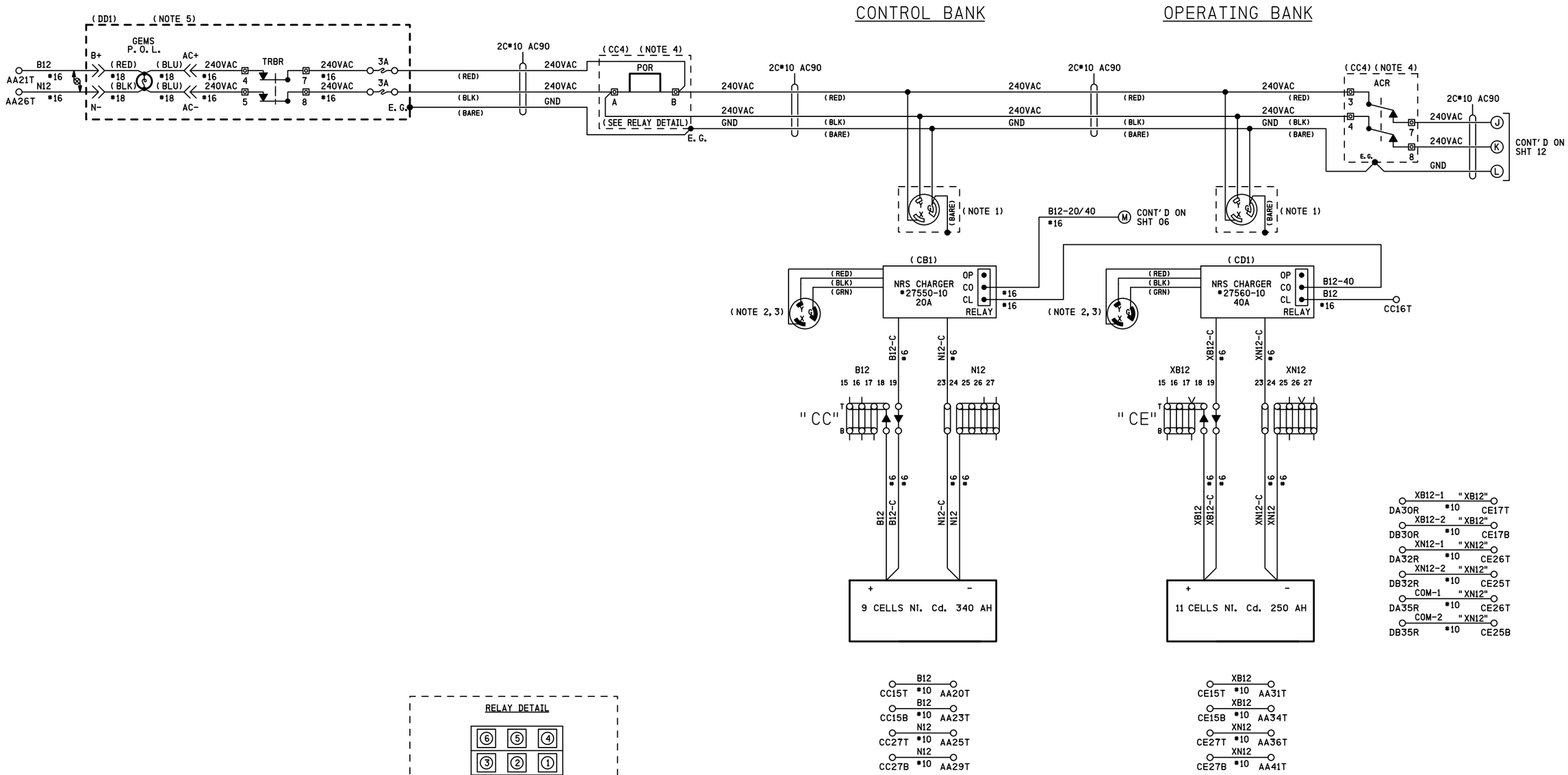

NOTES

1) 30A 250V TWIST LOCK RECEPTACLE HUBBELL HBL 2620
2) PLUG HUBBELL HBL 2621 REFER TO PS-902 PAGE 6
3) GROUND LUG LOCATED ON CHARGER HOUSING
4) PART OF SEARIII POWER CONTROL AND INDICATION RELAY JUNCTION BOX
5) PART OF POWER OFF INDICATOR LIGHT REPEATER RELAY JUNCTION BOX (REFER TO PS-907 SHT 2A)

<< DENOTES WAGO TERMINAL

DENOTES TWISTED PAIR

RELAY DETAIL

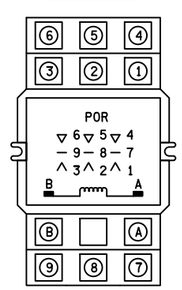

RELAY - POTTER & BRUMFIELD MODEL KUP-14A15-240 SOCKET MOUNTABLE 240 VAC W/ 3 FORM C CONTACTS

SOCKET - SCREW TERMINAL MODEL 27E121

SII 27 JAN 2014

PROPOSED
DESIGN NO. 13-0259
RED-IN YELLOW-OUT

AS INSTALLED
DATE _____
BY _____
(PRINT NAME)

PROPOSED D	M	Y	REVISIONS	D	C	COMPLETED D	M	Y	C

REGION SOUTHERN
SUB. FREEPORT 382

SIGNALS AND COMMUNICATIONS HOMEWOOD
27 JANUARY 2014
DES. APL
CH. BJW
DC DISTRIBUTION
FREEPORT, IL
CHERRY HILL RD
FRE-107.95-11

DOT# 290 142N

SIEMENS INDUSTRY INC
LOUISVILLE DIVISION, LOUISVILLE, KY

SIEMENS INDUSTRY INC
DES.: APL | DATE: 01/27/14 | JOB NO.: PICA10509
CKD.: BJW | ISSUE DATE: N/A | EST. NO.: GDXP07189
DRN.: APL | PLAN NO.: N/A | SHEET 11 OF 16
P TIME: 13:28 | P DATE: 31-MAR-2014 | CAD ID.: FRE-107.95-11

NO.	DATE	BY	DESCRIPTION	APP. BY
1				
2				
3				
4				
5				

REVISIONS

fre-107.95-11.dgn
31-MAR-2014

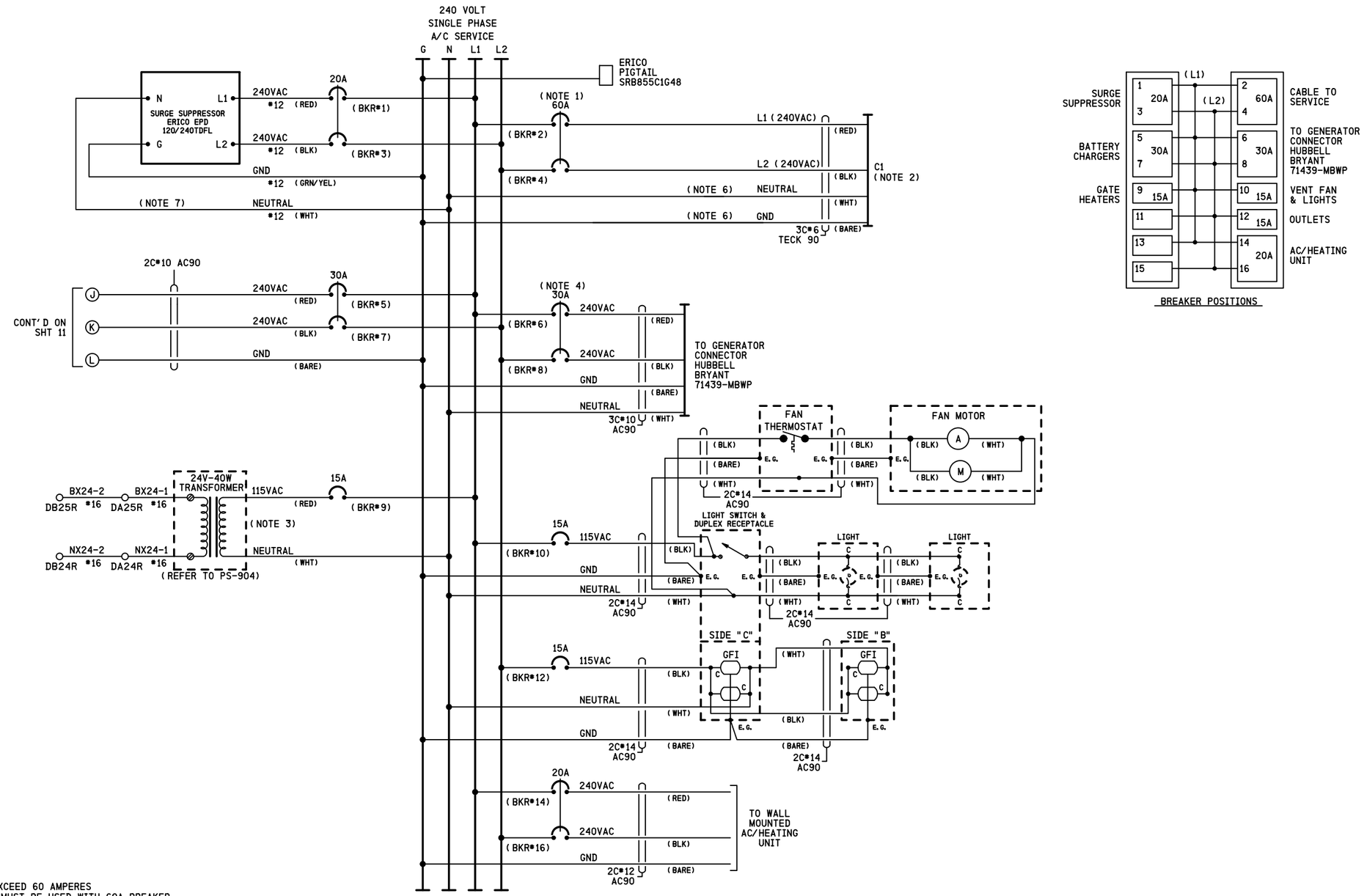

BREAKER POSITIONS

NOTES

1) CIRCUIT BREAKER NOT TO EXCEED 60 AMPERES
RETAINING KIT PK4DTIM4LA MUST BE USED WITH 60A BREAKER
2) FEEDER CIRCUIT BREAKER, AT STUB POLE SERVICE
PANEL, NOT TO EXCEED 60 AMPERES
3) 24 VOLT - 40 WATT TRANSFORMER (CN STOCK #02-45-367)
4) A SWITCH TRANSFER KIT MUST BE INSTALLED BETWEEN
THE SERVICE DISCONNECT BREAKER AND THE GENERATOR HOOK UP
5) WHERE SEPARATE GROUND WIRE EXISTS BETWEEN THE SERVICE AND THE
LOAD CENTER, REMOVE THE BRASS COLORED BONDING SCREW
(REFER TO SCHEMATIC ON BOX COVER FOR EXACT LOCATION)
6) S.C.#6 STRANDED, CSA TYPE R90 (X-LINK)
7) KEEP LEADS AS SHORT AS POSSIBLE

SII 27 JAN 2014

PROPOSED
DESIGN NO. 13-0259
RED-IN YELLOW-OUT

AS INSTALLED
DATE
BY
(PRINT NAME)

PROPOSED D	M	Y	REVISIONS	D	C	COMPLETED D	M	Y	C

REGION SOUTHERN
SUB. FREEPORT 382

SIGNALS AND COMMUNICATIONS HOMEWOOD
DES. APL
CH. BJW
27 JANUARY 2014
AC DISTRIBUTION
FREEPORT, IL
CHERRY HILL RD
FRE-107.95-12

DOT# 290 142N

REVISIONS			
NO.	DATE	BY	DESCRIPTION	APP. BY
1				
2				
3				
4				
5				

SIEMENS INDUSTRY INC
DES.: APL | DATE: 01/27/14 | JOB NO.: PICA10509
CKD.: BJW | ISSUE DATE: N/A | EST. NO.: QDXP07189
DRN.: APL | PLAN NO.: N/A | SHEET 12 OF 16
P TIME: 13:28 | P DATE: 31-MAR-2014 | CAD ID.: FRE-107.95-12

SIEMENS INDUSTRY INC
LOUISVILLE DIVISION, LOUISVILLE, KY

fre-107.95-12.dgn
31-MAR-2014

REVISIONS				
NO.	DATE	BY	DESCRIPTION	APP. BY
1				
2				
3				
4				
5				

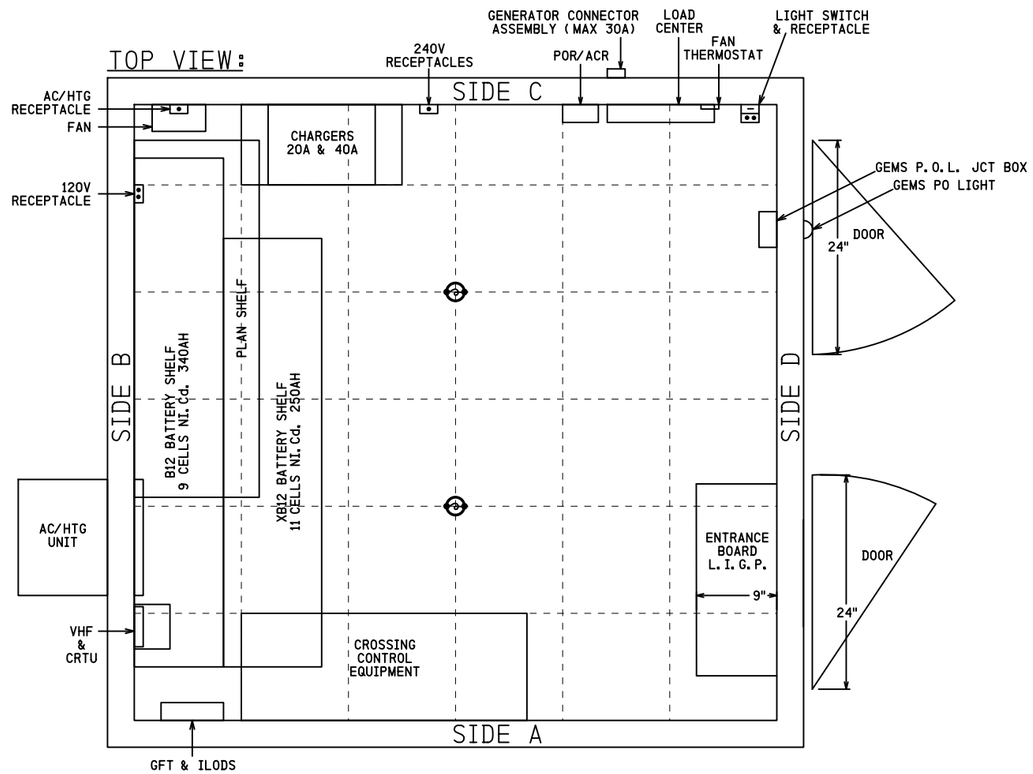

SII 27 JAN 2014

PROPOSED
DESIGN NO. 13-0259
RED-IN YELLOW-OUT

AS INSTALLED
DATE _____
BY _____
(PRINT NAME)

PROPOSED			REVISIONS	D	C	COMPLETED			C
D	M	Y				D	M	Y	

REGION SOUTHERN
SUB. FREEPORT 382

SIGNALS AND COMMUNICATIONS HOMEWOOD | DES. APL
27 JANUARY 2014 | CH. BJW

BUNGALOW LAYOUT TOP VIEW

FREEPORT, IL
CHERRY HILL RD

FRE-107.95-13

DOT# 290 142N

SIEMENS INDUSTRY INC

DES.: APL	DATE: 01/27/14	JOB NO.: PICA10509
CKD.: BJW	ISSUE DATE: N/A	EST. NO.: GDXP07189
DRN.: APL	PLAN NO.: N/A	SHEET 13 OF 16
P TIME: 13:28	P DATE: 31-MAR-2014	CAD ID.: FRE-107.95-13

SIEMENS INDUSTRY INC
LOUISVILLE DIVISION, LOUISVILLE, KY

fre-107.95-13.dgn
31-MAR-2014

NO.	DATE	BY	DESCRIPTION	APP. BY
1				
2				
3				
4				
5				

REVISIONS

ENTRANCE BOARD L.I.G.P.

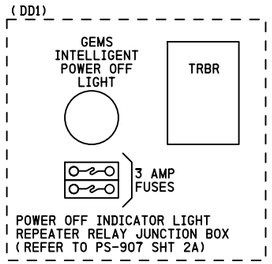

SIDE VIEW: SIDE D

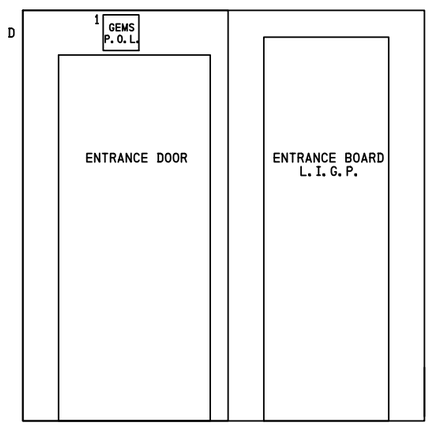

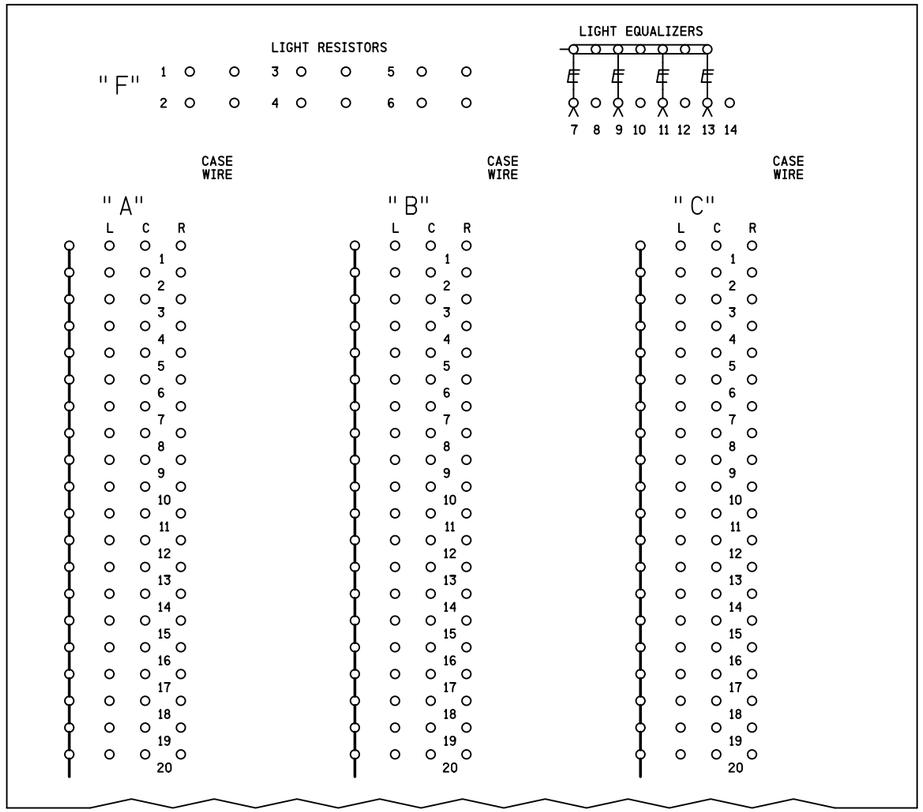

INSIDE

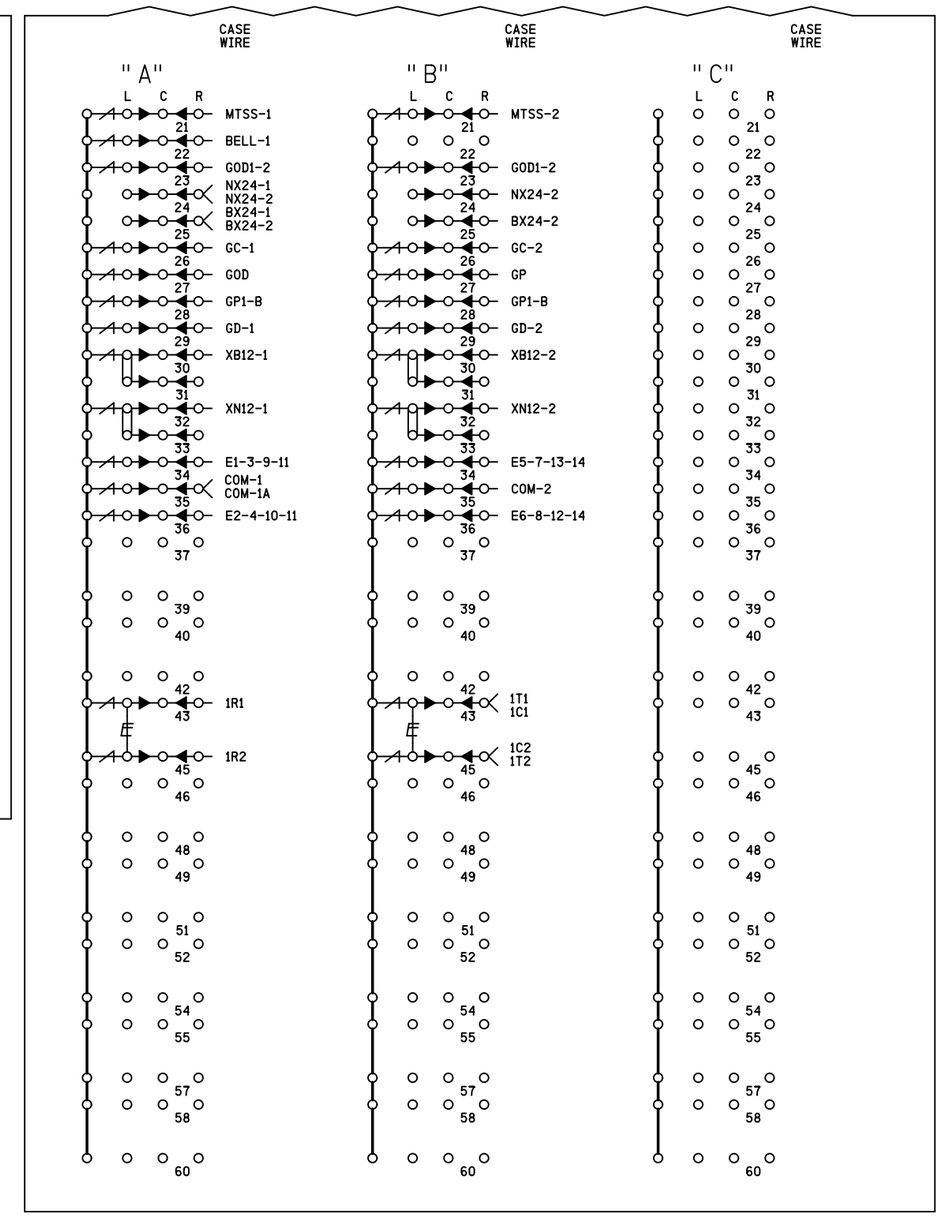

NOTES

- DENOTES HD EQUALIZER CN# 02-32-391 SAFETRAN # 022700-1X
- DENOTES LOW VOLTAGE ARRESTOR CN# ERICO # ETSP23050
- DENOTES GROUND PLANE
- DENOTES TWISTED PAIR

SII 27 JAN 2014

PROPOSED
DESIGN NO. 13-0259
RED-IN YELLOW-OUT

AS INSTALLED
DATE _____
BY _____
(PRINT NAME)

PROPOSED D	M	Y	REVISIONS	D	C	COMPLETED D	M	Y	C

REGION SOUTHERN
SUB. FREEPORT 382

SIGNALS AND COMMUNICATIONS HOMEWOOD
27 JANUARY 2014
DES. APL
CH. BJW

BUNGALOW LAYOUT SIDE D
& L.I.G.P. INSIDE
FREEPORT, IL
CHERRY HILL RD

FRE-107.95-14

DOT# 290 142N

SIEMENS INDUSTRY INC
DES.: APL | DATE: 01/27/14 | JOB NO.: PICA10509
CKD.: BJW | ISSUE DATE: N/A | EST. NO.: 0DXP07189
DRN.: APL | PLAN NO.: N/A | SHEET 14 OF 16
P TIME: 13:28 | P DATE: 31-MAR-2014 | CAD ID.: FRE-107.95-14

fre-107.95-14.dgn
31-MAR-2014

SIEMENS INDUSTRY INC
LOUISVILLE DIVISION, LOUISVILLE, KY

REVISIONS			
NO.	DATE	BY	DESCRIPTION	APP. BY
1				
2				
3				
4				
5				

ENTRANCE BOARD L.I.G.P.

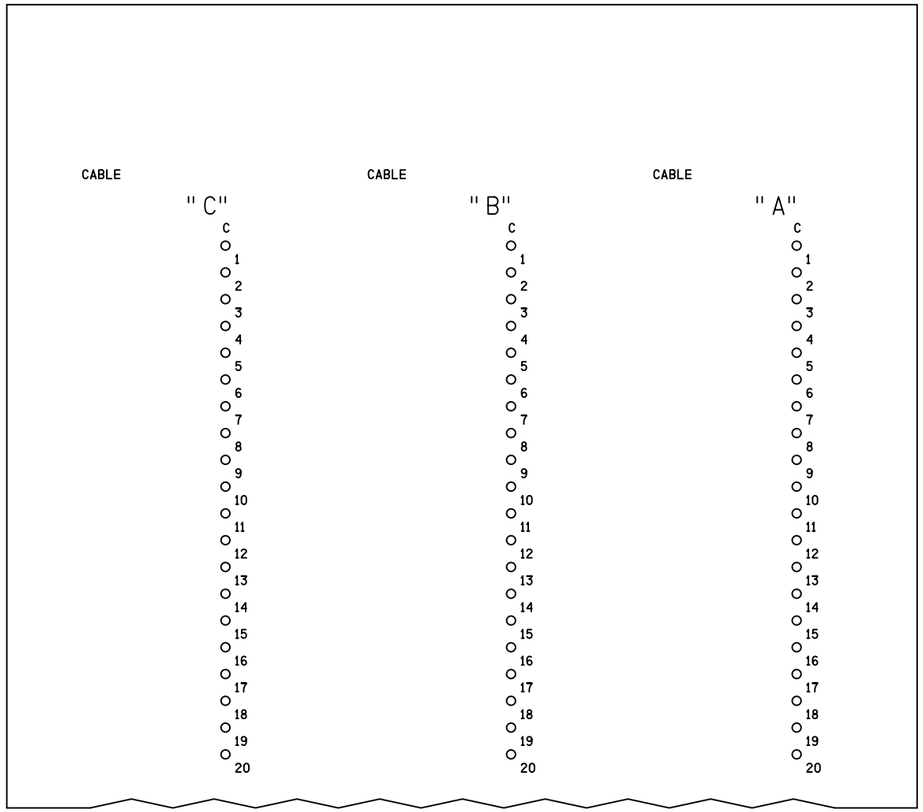

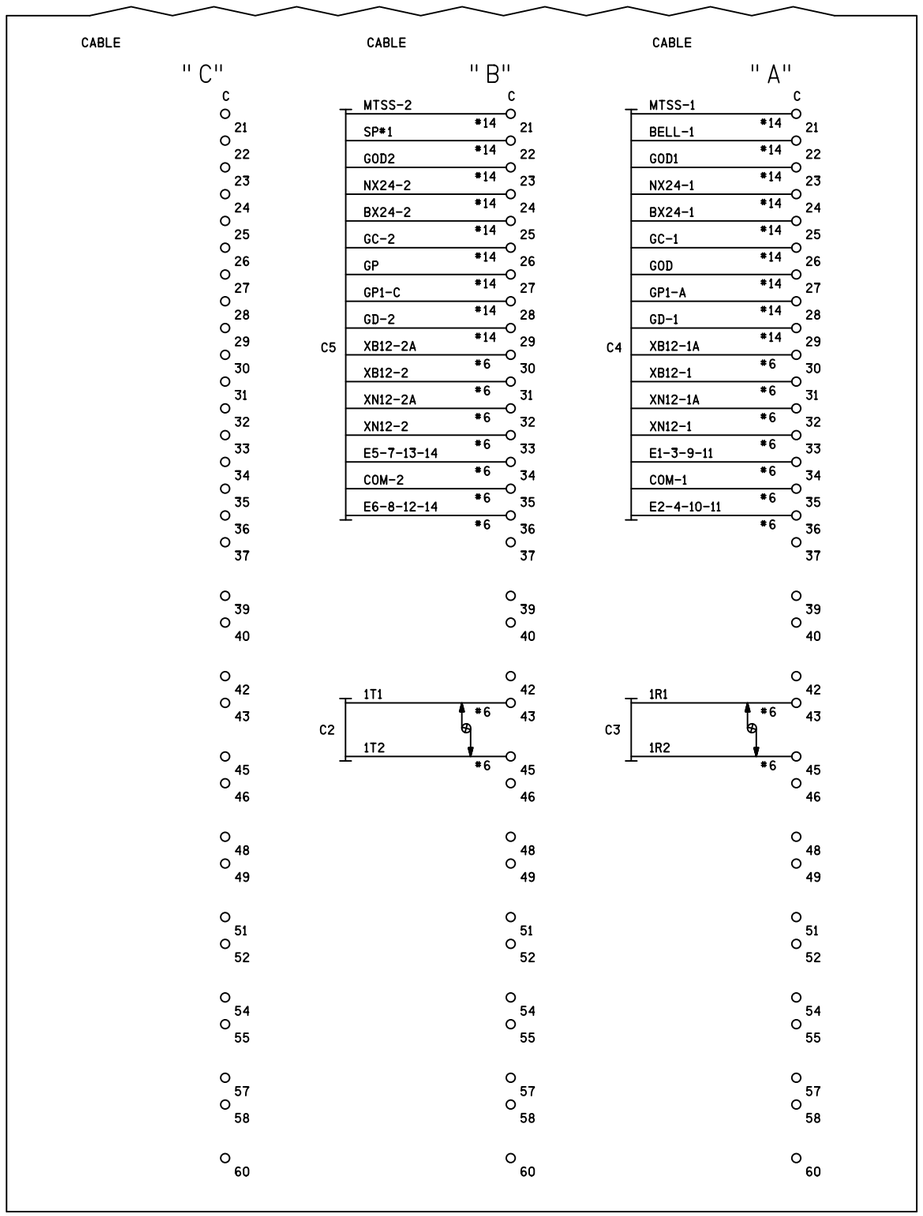

NOTES

- DENOTES HD EQUALIZER CN# 02-32-391 SAFETRAN # 022700-1X
- DENOTES LOW VOLTAGE ARRESTOR CN# ERICO # ETSP23050
- DENOTES GROUND PLANE
- DENOTES TWISTED PAIR

SII 27 JAN 2014

PROPOSED
DESIGN NO. 13-0259
RED-IN YELLOW-OUT

AS INSTALLED
DATE _____
BY _____
(PRINT NAME)

PROPOSED D	M	Y	REVISIONS	D	C	COMPLETED D	M	Y	C

REGION SOUTHERN
SUB. FREEPORT 382

SIGNALS AND COMMUNICATIONS HOMEWOOD
27 JANUARY 2014
DES. APL
CH. BJW

ENTRANCE BOARD L.I.G.P. OUTSIDE
FREEPORT, IL
CHERRY HILL RD
FRE-107.95-15

DOT# 290 142N

SIEMENS INDUSTRY INC

DES.: APL	DATE: 01/27/14	JOB NO.: PICA10509	
CKD.: BJW	ISSUE DATE: N/A	EST. NO.: 0DXP07189	
DRN.: APL	PLAN NO.: N/A	SHEET 15 OF 16	
P TIME: 13:28	P DATE: 31-MAR-2014	CAD ID.: FRE-107.95-15	

fre-107.95-15.dgn
31-MAR-2014

SIEMENS INDUSTRY INC
LOUISVILLE DIVISION, LOUISVILLE, KY

NO.	DATE	BY	DESCRIPTION	APP. BY
1				
2				
3				
4				
5				

REVISIONS

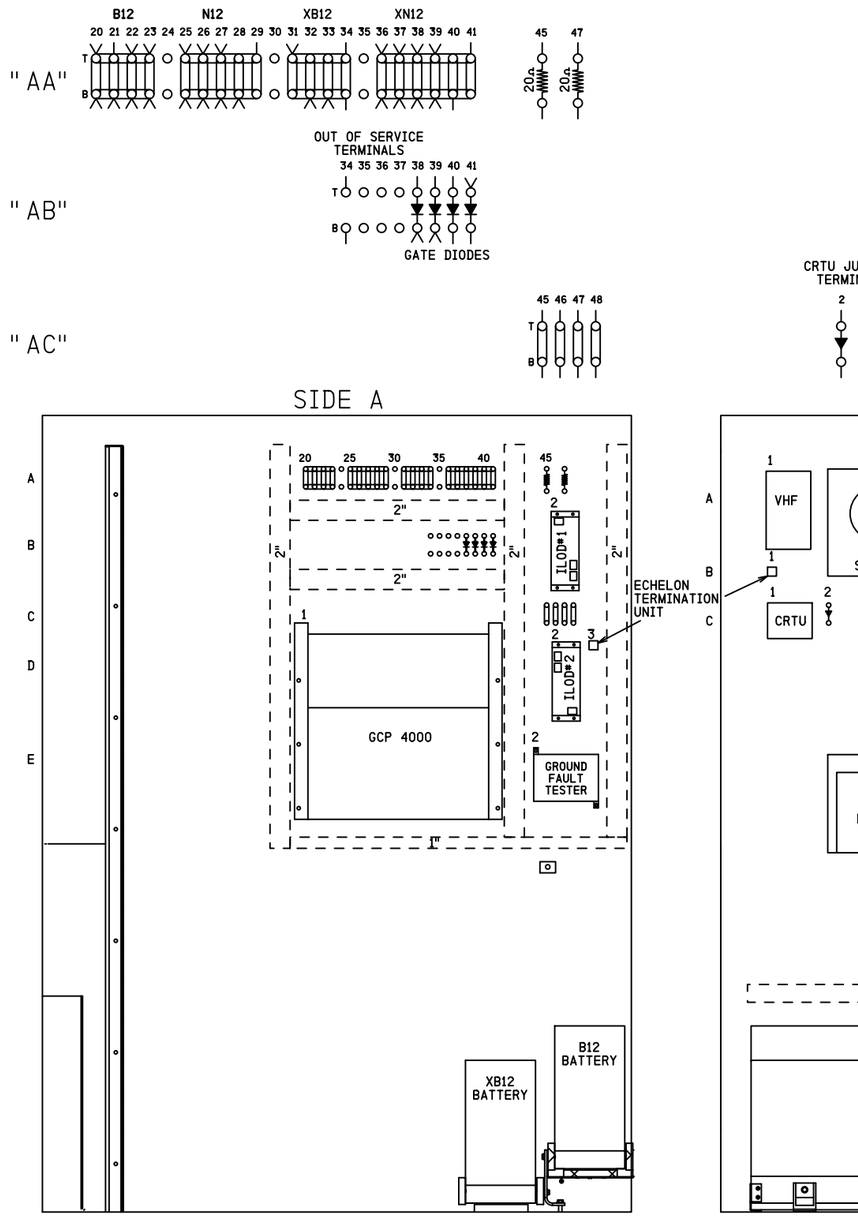

NOTES

1) SURGE PROTECTION SHOULD BE BONDED TO BUNGALOW

REPRESENTS PANDUIT

DENOTES RECTIFIER (SAFETRAN #8008A299006)

SII 27 JAN 2014

PROPOSED
DESIGN NO. 13-0259
RED-IN YELLOW-OUT

AS INSTALLED
DATE _____
BY _____
(PRINT NAME)

PROPOSED D	M	Y	REVISIONS	D	C	COMPLETED D	M	Y	C

REGION SOUTHERN
SUB. FREEPORT 382

SIGNALS AND COMMUNICATIONS HOMEWOOD
27 JANUARY 2014
DES. APL
CH. BJW

BUNGALOW LAYOUT SIDES A, B & C

FREEPORT, IL
CHERRY HILL RD

FRE-107.95-16

DOT# 290 142N

17

fre-107.95-16.dgn
31-MAR-2014

SIEMENS INDUSTRY INC

DES.: APL	DATE: 01/27/14	JOB NO.: PICA10509
CKD.: BJW	ISSUE DATE: N/A	EST. NO.: 1QDXP07189
DRN.: APL	PLAN NO.: N/A	SHEET 16 OF 16
P TIME: 13:28	P DATE: 31-MAR-2014	CAD ID.: FRE-107.95-16

SIEMENS INDUSTRY INC
LOUISVILLE DIVISION, LOUISVILLE, KY