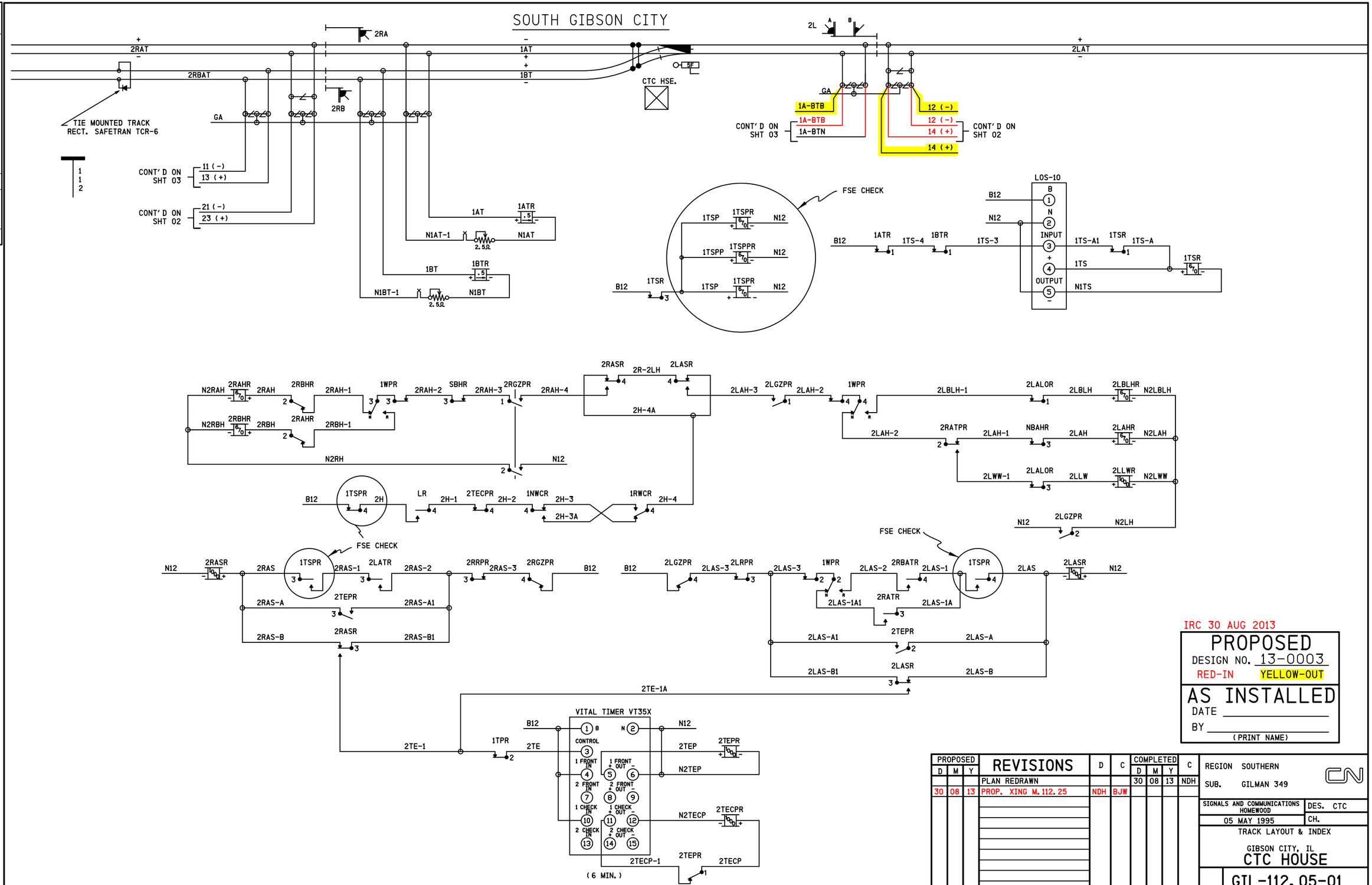

IRC 30 AUG 2013

PROPOSED
DESIGN NO. 13-0003
RED-IN YELLOW-OUT

AS INSTALLED
DATE
BY
(PRINT NAME)

PROPOSED D	M	Y	REVISIONS	D	C	COMPLETED D	M	Y	C
			PLAN REDRAWN			30	08	13	NDH
30	08	13	PROP. XING M.112.25	NDH	BJW				

REGION SOUTHERN
SUB. GILMAN 349

SIGNALS AND COMMUNICATIONS HOMEWOOD
05 MAY 1995
DES. CTC
CH.

TRACK LAYOUT & INDEX
GIBSON CITY, IL
CTC HOUSE
GIL-112.05-01

5

REVISIONS

NO.	DATE	BY	DESCRIPTION	APP. BY
1				
2				
3				
4				
5				

INVENSYS RAIL CORPORATION

DES.: NDH	DATE: 08/30/13	JOB NO.: JXXD03624
CKD.: BJW	ISSUE DATE: N/A	EST. NO.: XP-6921
DRN.: NDH	PLAN NO.: N/A	SHEET 1 OF 5
P TIME: 07:53	P DATE: 19-MAR-2014	CAD ID.: GIL-112.05-01

INVENSYS RAIL CORP.
LOUISVILLE DIVISION, LOUISVILLE, KY

gil-112.05-01.dgn
19-MAR-2014

REVISIONS			
NO.	DATE	BY	DESCRIPTION	APP. BY
1				
2				
3				
4				
5				

CTC HOUSE

gil-112.05-02.dgn
19-MAR-2014

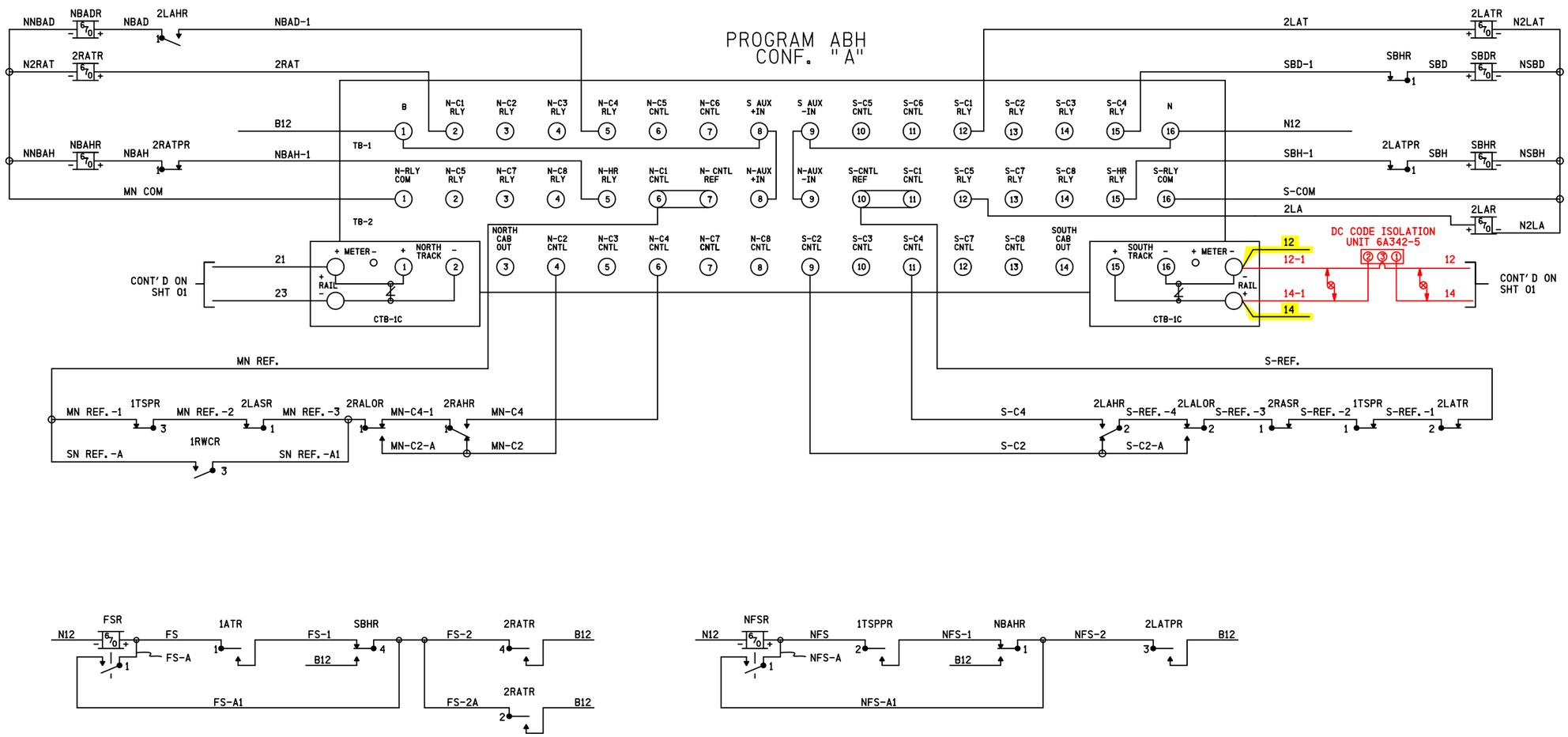

NOTE

⊗ DENOTES TWISTED PAIR

IRC 30 AUG 2013

PROPOSED
DESIGN NO. 13-0003
RED-IN YELLOW-OUT

AS INSTALLED
DATE _____
BY _____
(PRINT NAME)

PROPOSED D	M	Y	REVISIONS	D	C	COMPLETED D	M	Y	C
			PLAN REDRAWN			30	08	13	NDH
30	08	13	PROP. XING M.112.25	NDH	BJW				

REGION SOUTHERN
SUB. GILMAN 349

SIGNALS AND COMMUNICATIONS HOMEWOOD
05 MAY 1995
DES. CTC
CH.
ELECTROCODE 4

GIBSON CITY, IL
CTC HOUSE

GIL-112.05-02

INVENSYS RAIL CORPORATION			
DES.: NDH	DATE: 08/30/13	JOB NO.: JXXD03624	
CKD.: BJW	ISSUE DATE: N/A	EST. NO.: XP-6921	
DRN.: NDH	PLAN NO.: N/A	SHEET 2 OF 5	
P TIME: 07:53	P DATE: 19-MAR-2014	CAD ID.: GIL-112.05-02	

INVENSYS RAIL CORP.
LOUISVILLE DIVISION, LOUISVILLE, KY

CTC HOUSE

gil-112.05-03.dgn
19-MAR-2014

SIGNAL 2RA

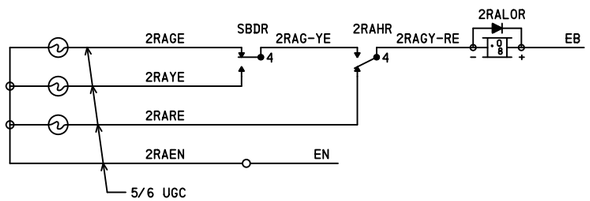

SIGNAL 2LA

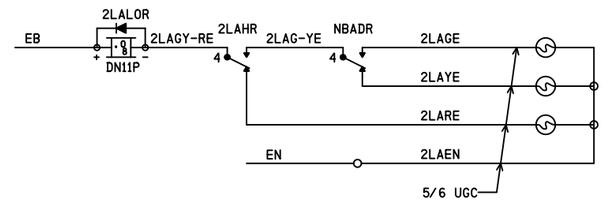

SIGNAL 2RB

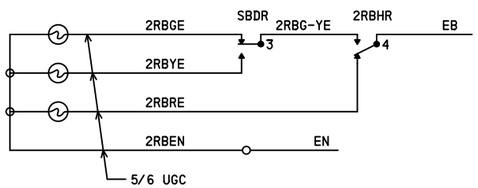

SIGNAL 2LB

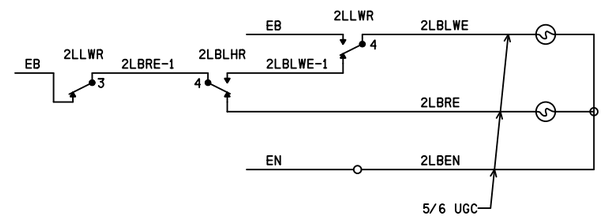

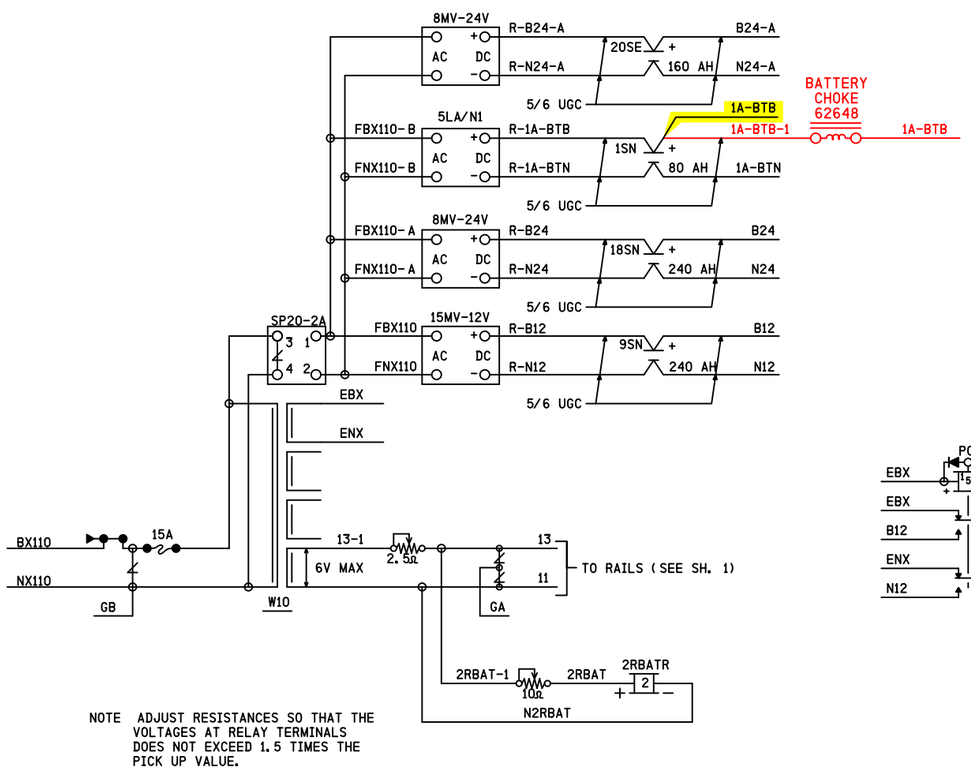

NOTE ADJUST RESISTANCES SO THAT THE VOLTAGES AT RELAY TERMINALS DOES NOT EXCEED 1.5 TIMES THE PICK UP VALUE.

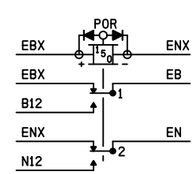

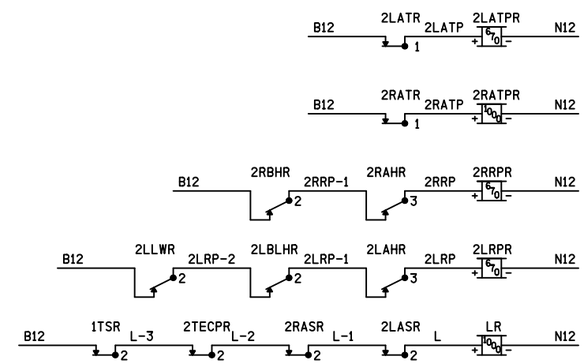

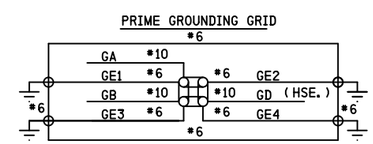

IRC 30 AUG 2013

PROPOSED
DESIGN NO. 13-0003
RED-IN YELLOW-OUT

AS INSTALLED
DATE _____
BY _____
(PRINT NAME)

PROPOSED D	PROPOSED M	PROPOSED Y	REVISIONS	D	C	COMPLETED D	COMPLETED M	COMPLETED Y	C
			PLAN REDRAWN			30	08	13	NDH
30	08	13	PROP. XING M.112.25	NDH	BJW				

REGION SOUTHERN
SUB. GILMAN 349

SIGNALS AND COMMUNICATIONS HOMEWOOD
05 MAY 1995
DES. CTC
CH.

SIGNALS 2R & 2L CIRCUITS

GIBSON CITY, IL
CTC HOUSE

GIL-112.05-03

REVISIONS NO.	DATE	BY	DESCRIPTION	APP. BY
1				
2				
3				
4				
5				

INVENSYS RAIL CORPORATION

DES.: NDH	DATE: 08/30/13	JOB NO.: JXXD03624	
CKD.: BJW	ISSUE DATE: N/A	EST. NO.: XP-6921	
DRN.: NDH	PLAN NO.: N/A	SHEET 3 OF 5	
P TIME: 07:54	P DATE: 19-MAR-2014	CAD ID.: GIL-112.05-03	

INVENSYS RAIL CORP.
LOUISVILLE DIVISION, LOUISVILLE, KY

REVISIONS				
NO.	DATE	BY	DESCRIPTION	APP. BY
1				
2				
3				
4				
5				

gil-112.05-04.dgn
19-MAR-2014

TYPICAL WIRING OF RAILS COMPANY SNOW MELTER

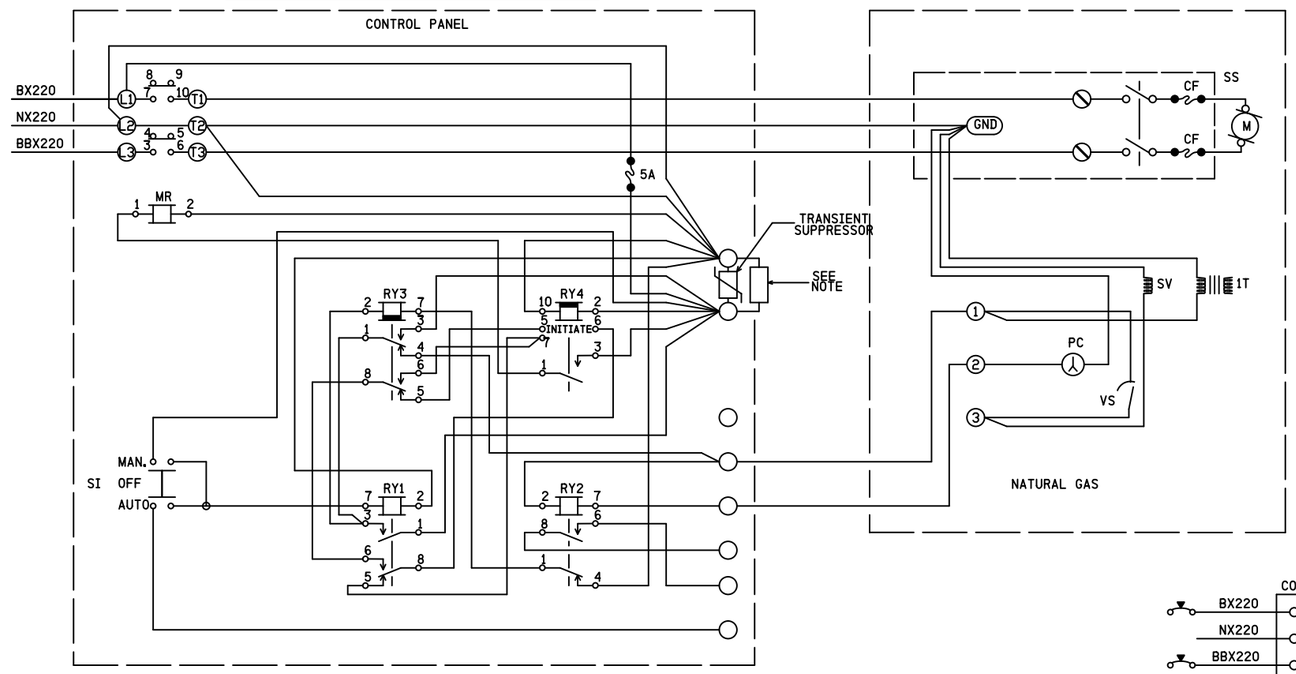

ITEM	PART NO.	DESCRIPTION
RY1	HP-1059	DPDT (SEQUENCE START RELAY
RY2	CPT-1007	DPDT RELAY
RY3	HAB-6179	T.D. ON PICK UP, 45 SEC.
RY4	HAB-6076	T.D. ON DROP OUT, 180 SEC.
MR	HAB-1210	MOTOR STARTER
VS	HAB-2030	VACUUM SWITCH
PC	HAB-2003	PHOTO CELL
CF	HAB-2004-30	CARTRIDGE FUSE - 30 AMPS
SV	HAB-2028	FUEL VALVE
IT	HAB-2007-10	IGNITION TRANSFORMER
M	HAB-2029	MOTOR
SS	HAB-2004	SAFETY SWITCH

NOTE ANY CONTROL BOX CAN BE EQUIPED WITH A HEATER. THIS IS ACCOMPLISHED BY PLACING A 750 OHM HEATER ACROSS TERMINALS 1 & 2 AND IS ACTIVATED WHENEVER POWER IS IN THE BOX. ITS PURPOSE IS TO MAINTAIN THE SOLID STATE CONTROLS WARM IN SUB-ZERO CONDITIONS

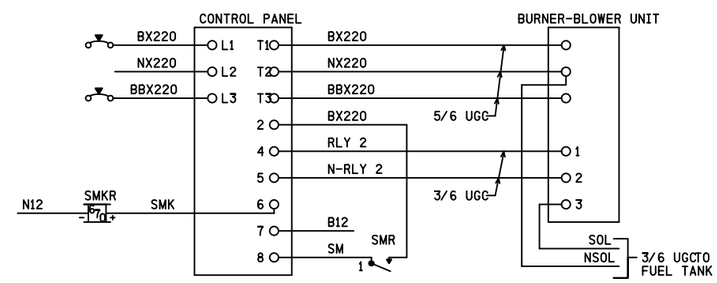

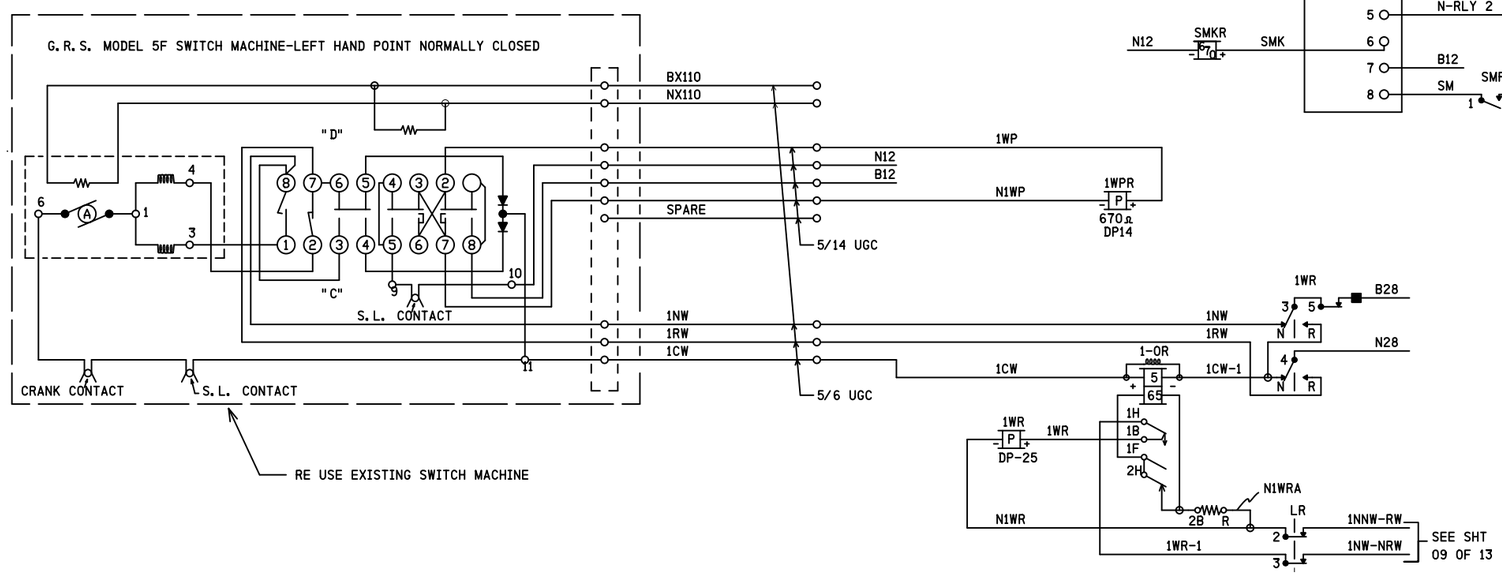

PROPOSED D	M	Y	REVISIONS	D	C	COMPLETED D	M	Y	C
			PLAN REDRAWN			30	08	13	NDH

REGION SOUTHERN
SUB. GILMAN 349

SIGNALS AND COMMUNICATIONS HOMEWOOD
05 MAY 1995
DES. CTC
CH.

SWITCH & SNOWMELTER CIRCUITS

GIBSON CITY, IL
CTC HOUSE

GIL-112.05-04

INVENSYS RAIL CORPORATION			
DES.: NDH	DATE: 08/30/13	JOB NO.: JXXD03624	
CKD.: BJW	ISSUE DATE: N/A	EST. NO.: XP-6921	
DRN.: NDH	PLAN NO.: N/A	SHEET 4 OF 5	
P TIME: 07:54	P DATE: 19-MAR-2014	CAD ID.: GIL-112.05-04	

INVENSYS RAIL CORP.
LOUISVILLE DIVISION, LOUISVILLE, KY

REVISIONS				
NO.	DATE	BY	DESCRIPTION	APP. BY
1				
2				
3				
4				
5				

gil-112.05-05.dgn
19-MAR-2014

CTC HOUSE

1ATR
1- 1TP
2- FS

1BTR
1- 1TP
2-

2RATR
1- NBAH
2- 2RAATK
3- 2LAS
4- FS-2

2RBTR
1- 2RBATK
2- FS-2A
3-
4- 2LAS

2LATR
1- 2LATPP
2- S-EC
3- 2RAS
4-

2LAR
1-
2- 2LATK
3-
4-

FSR
1- FS
2-
3-
4-

NBAHR
1- NBAD
2-
3- 2LAH
4- NFS

1TPR
1- 1TS
2- 2TE
3- 2RAS
4- 2LAS

1TSR
1- 1TS
2- L
3- 1TSP
4- 2H

1TSPR
1- S-EC
2- 2L-RGZ
3- MN-EC
4- 1TK

SBDR
1-
2-
3- 2RBG-YE
4- 2RAG-YE

SBHR
1- SBD
2-
3- 2RAH
4- FS-2

NBADR
1-
2-
3-
4- 2LAG-YE

2LGZPR
1- 2LAH
2- N2LAH
3-
4- 2LAS

2RGZPR
1- 2RAH
2- N2RAH
3-
4- 2RAS

2RAHR
1- MN-EC
2- 2RBH
3- 2RRP
4- 2RAGE

2RBHR
1-
2- 2RAH
3- 2RRP
4- 2RBGE

2LAHR
1- NBAD
2- S-EC
3- 2LRP
4- 2LAGE

2LATPR
1- SBH
2-
3- NFS
4- RTT

2LBLHR
1-
2-
3- 2LRP
4- 2LB-LWE

2LASR
1- MN-EC
2- L
3- 2LAS
4- 2R-2LH

2RASR
1- S-EC
2- L
3- 2RAS
4- 2R-2LH

2LRPR
1- 2LGK
2-
3- 2LAS
4-

2RRPR
1- 2RGK
2-
3- 2RAS
4-

2TEPR
1- 2TECP
2- 2LAS
3- 2RAS
4- 2H

2TECPR
1-
2- L
3-
4-

1NWCR
1- 1NK
2- RTT
3-
4- 2H

1RWCR
1- 1RK
2-
3- MN-REF.
4- 2H

LR
1- 1LK
2- N1WR
3- WR
4- 2H

SMR
1- SM
2-
3-
4-

SMKR
1- SMK
2-
3-
4-

POR
1- EB
2- EN
3-
4- POK

2RALOR
1- MN-EC
2-

2LLWR
1-
2- 2LRP
3-
4- 2LBWE

1WPR
1- 1NWC 1P- 1NWC
2- 2LAS 2P- 2LAS
3- 2RA-BH 3P- 2RA-BH
4- 2LA-BH 4P- 2LA-BH

1WR
5- 1NW 1P-
2P-
3P- 1NW
4P- 1CW

2LALOPR
1- 2LLW
2- S-REF
3-
4-

1TPPR
1- RTT
2- NFS
3-
4-

2RATPR
1- NBAH
2- 2LAH
3-
4- RTT

2LALOR
1- 2LBH
2- S-EC

PROPOSED			REVISIONS	D	C	COMPLETED			C
D	M	Y				D	M	Y	
			PLAN REDRAWN			30	08	13	NDH

REGION SOUTHERN
SUB. GILMAN 349

SIGNALS AND COMMUNICATIONS HOMEWOOD
05 MAY 1995
DES. CTC
CH.

RELAY DETAIL

GIBSON CITY, IL
CTC HOUSE

GIL-112.05-05

5

INVENSYS RAIL CORPORATION

DES.: NDH	DATE: 08/30/13	JOB NO.: JXXD03624	
CKD.: BJW	ISSUE DATE: N/A	EST. NO.: XP-6921	
DRN.: NDH	PLAN NO.: N/A	SHEET 5 OF 5	
P TIME: 07:54	P DATE: 19-MAR-2014	CAD ID.: GIL-112.05-05	

INVENSYS RAIL CORP.
LOUISVILLE DIVISION, LOUISVILLE, KY

gil-112.25-0.dgn
19-MAR-2014

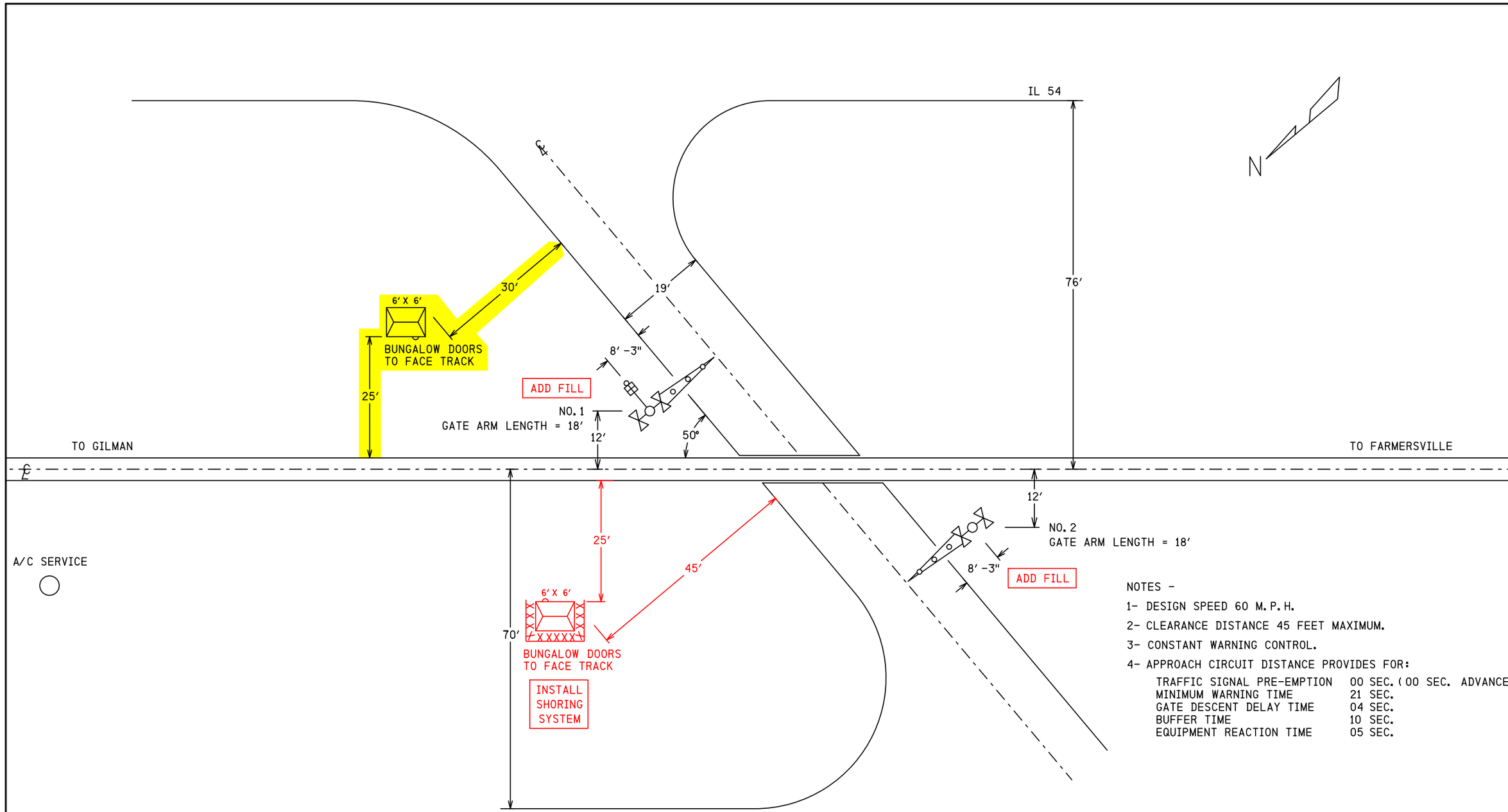

NOTES -

1- DESIGN SPEED 60 M.P.H.

2- CLEARANCE DISTANCE 45 FEET MAXIMUM.

3- CONSTANT WARNING CONTROL.

4- APPROACH CIRCUIT DISTANCE PROVIDES FOR:

TRAFFIC SIGNAL PRE-EMPTION	00 SEC. (00 SEC. ADVANCE)
MINIMUM WARNING TIME	21 SEC.
GATE DESCENT DELAY TIME	04 SEC.
BUFFER TIME	10 SEC.
EQUIPMENT REACTION TIME	05 SEC.

IRC 30 AUG 2013

PROPOSED
DESIGN NO. 13-0003
RED-IN YELLOW-OUT

AS INSTALLED
DATE _____
BY _____
(PRINT NAME)

PROPOSED D	PROPOSED M	PROPOSED Y	REVISIONS	D	C	COMPLETED D	COMPLETED M	COMPLETED Y	C
18	03	14	M.112.25 BUNG RELOCATE	NAD	BJW				

REGION SOUTHERN
SUB. GILMAN 349
CN

SIGNALS AND COMMUNICATIONS HOMEWOOD
30 AUGUST 2013
DES. KLT
CH. BJW

SITUATION SKETCH
SCALE 1" = 20′
GIBSON CITY, IL
300N

GIL-112.25-0

DOT# 289 368D

16

INVENSYS RAIL CORP.
LOUISVILLE DIVISION, LOUISVILLE, KY

REVISIONS				
NO.	DATE	BY	DESCRIPTION	APP. BY
1				
2				
3				
4				
5				

FLASHING LIGHT UNITS ALIGNMENT TABLE

PRIMARY FRONT LIGHTS FOR VEHICLES							
SIG #	LIGHT #	ROUNDEL		ROAD SPEED	MINIMUM DISTANCE	RECOMMENDED DISTANCE	ALIGNMENT DISTANCE
		SIZE	TYPE	MPH	FT	FT	FT
1	1,2	12"	LED				
2	7,8	12"	LED				
BACK LIGHTS FOR VEHICLES							
SIG #	LIGHT #	ROUNDEL		ROAD SPEED	MINIMUM DISTANCE	RECOMMENDED DISTANCE	ALIGNMENT DISTANCE
		SIZE	TYPE	MPH	FT	FT	FT
1	3,4	12"	LED	N/A	N/A	N/A	50
2	5,6	12"	LED	N/A	N/A	N/A	50

NOTE
FIELD IS TO PROVIDE THE ACTUAL ALIGNMENT DISTANCE AS DETERMINED BY
SCP-706: ROAD CROSSING DEVICE LIGHT UNIT ALIGNMENT PROCEDURES

FIELD TO VERIFY

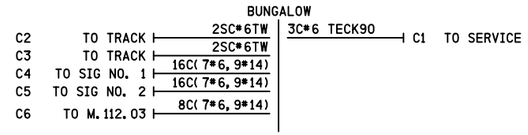

CONTENT	SHEET #
SITUATION SKETCH	0
TRACK LAYOUT & INDEX	01
GCP 4000 CHASSIS & MODULE LAYOUT	02
GCP 4000 PROGRAM INFORMATION	03
GCP 4000/SEAR III SETUP & PROGRAM	04
GCP 4000 CALIBRATION HISTORY	05
GCP 4000 TRACK 1 & 2 MODULE CONNECTIONS	06
GCP 4000 CPUII+ & VHF COMMUNICATOR	07
GCP 4000/SEARIII WITH GFT & CRTU	08
GCP 4000/SSCCIIII GATE CONTROLLERS W/ ILODS	09
GATE 1 & 2 MECH. CONTROL CIRCUITS SAFETRAN S-60	10
DC DISTRIBUTION	11
AC DISTRIBUTION	12
BUNGALOW LAYOUT TOP VIEW	13
BUNGALOW LAYOUT SIDE D & L.I.G.P.	14
BUNGALOW LAYOUT SIDES A, B & C	15

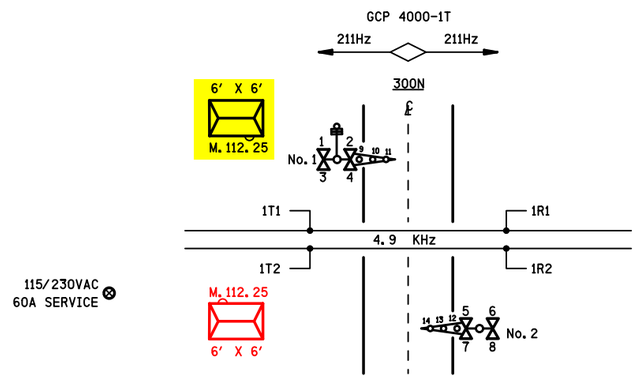

IRC 30 AUG 2013

PROPOSED
DESIGN NO. 13-0003
RED-IN YELLOW-OUT

AS INSTALLED
DATE _____
BY _____
(PRINT NAME)

PROPOSED D	M	Y	REVISIONS	D	C	COMPLETED D	M	Y	C
18	03	14	M.112.25 BUNG RELOCATE	NAD	BJW				

REGION SOUTHERN
SUB. GILMAN 349

SIGNALS AND COMMUNICATIONS HOMEWOOD
30 AUGUST 2013
DES. NDH
CH. BJW

TRACK LAYOUT & INDEX

GIBSON CITY, IL
300N

GIL-112.25-01

DOT# 289 368D

INVENSYS RAIL CORPORATION

DES.: NDH	DATE: 08/30/13	JOB NO.: JXXD03624	
CKD.: BJW	ISSUE DATE: N/A	EST. NO.: XP-6921	
DRN.: NDH	PLAN NO.: N/A	SHEET 1 OF 15	
P TIME: 07:54	P DATE: 19-MAR-2014	CAD ID.: GIL-112.25-01	

INVENSYS RAIL CORP.
LOUISVILLE DIVISION, LOUISVILLE, KY

gil-112.25-01.dgn
19-MAR-2014

REVISIONS				
NO.	DATE	BY	DESCRIPTION	APP. BY
1				
2				
3				
4				
5				

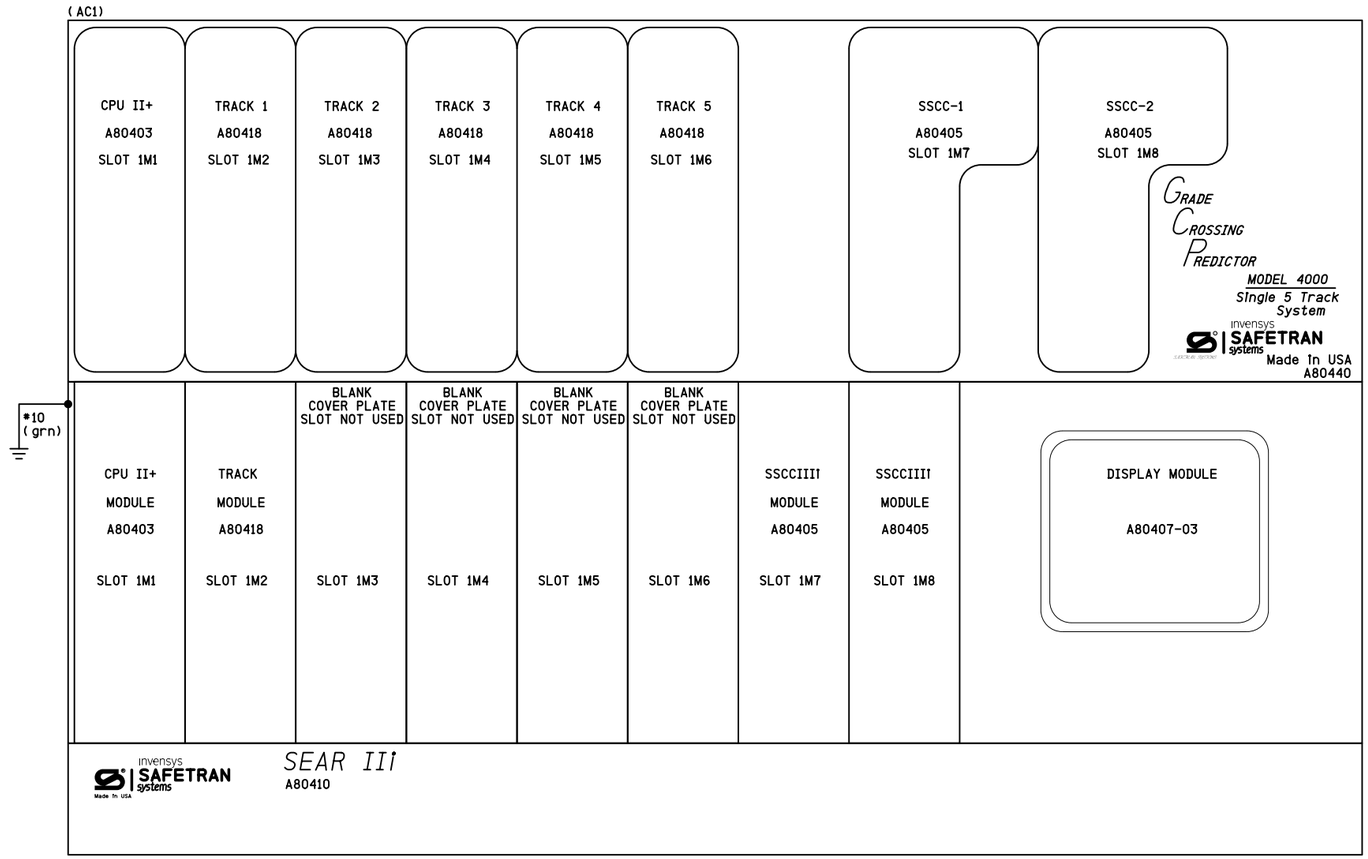

NOTES

1) DISABLE THE DISPLAY HEATER BY REMOVING JUMPER J-22 (LOCATED AT THE EDGE OF THE DISPLAY MODULE CARD THAT PLUGS INTO THE CHASSIS)

ATTENTION!

ENSURE THE DISPLAY MODULE HEATER IS DISABLED
LEAVING THE DISPLAY HEATER ENABLED WILL REDUCE THE AMOUNT OF
BATTERY STANDBY TIME IN THE EVENT OF AN AC POWER FAILURE

HEATER FUNCTION IS JUMPER SELECTABLE ON THE DISPLAY MODULE BOARD
THREE OPTIONS ARE AVAILABLE
NORMAL LCD HTR (DEFAULT)
HI CURRENT
NO JUMPER (HEATER DISABLED)

IRC 30 AUG 2013

PROPOSED
DESIGN NO. 13-0003
RED-IN YELLOW-OUT

AS INSTALLED
DATE _____
BY _____
(PRINT NAME)

PROPOSED			REVISIONS	D	C	COMPLETED			C
D	M	Y				D	M	Y	

REGION SOUTHERN
SUB. GILMAN 349

SIGNALS AND COMMUNICATIONS HOMEWOOD
30 AUGUST 2013
DES. NDH
CH. BJW

GCP 4000
CHASSIS & MODULE LAYOUT
GIBSON CITY, IL
300N

GIL-112.25-02

DOT# 289 368D

INVENSYS RAIL CORPORATION

DES.: NDH	DATE: 08/30/13	JOB NO.: JXXD03624	
CKD.: BJW	ISSUE DATE: N/A	EST. NO.: XP-6921	
DRN.: NDH	PLAN NO.: N/A	SHEET 2 OF 15	
P TIME: 07:54	P DATE: 19-MAR-2014	CAD ID.: GIL-112.25-02	

INVENSYS RAIL CORP.
LOUISVILLE DIVISION, LOUISVILLE, KY

gil-112.25-02.dgn
19-MAR-2014

REVISIONS				
NO.	DATE	BY	DESCRIPTION	APP. BY
1				
2				
3				
4				
5				

Program Report

Location and SIN

DOT Number: 289368D
Milepost Number: 112.25
Site Name: 300N

SIN: 762010010016

MCF and Template Selection

MCF Name: GCP-T6X-02-2.mcf
MCF Revision: 022
MCFCRC: 79225F13

Template = 1A:6 Trk BI (OCCN)

Check Numbers

Office Check Number: 0B3CA921
Config. Check Number: 1F395F43
(Based on MCF Revision 022)

Program

BASIC: module configuration
Track 1/PSO 1 Slot = Track (OCCN)
Track 2/RIO 1 Slot = Not Used (OCCN)
Track 3/PSO 2 Slot = Not Used (OCCN)
Track 4/PSO 3 Slot = Not Used (OCCN)
Track 5/RIO 2 Slot = Not Used (OCCN)
Track 6/RIO 3 Slot = Not Used (OCCN)
SSCC-1 Slot = SSCC31 (OCCN)
SSCC-2 Slot = SSCC31 (OCCN)
SEAR Used = Yes (OCCN)

BASIC: MS/GCP operation
Track 1 : MS/GCP Operation = Yes (OCCN)

BASIC: Island operation
Track 1 : Island Used = Internal (OCCN)

BASIC: preemption
Preempt Logic = No (OCCN)

BASIC: radio Dax links
Radio DAX link A Used = No (OCCN)
Radio DAX link B Used = No (OCCN)

BASIC: Vital Comms links
Vital Comms link 1 Used = No (OCCN)
Vital Comms link 2 Used = No (OCCN)

PREDICTORS: track 1
Track 1 : Prime Used = Yes (OCCN)
Track 1 : Dax A Used = No (OCCN)
Track 1 : Dax B Used = No (OCCN)
Track 1 : Dax C Used = No (OCCN)
Track 1 : Dax D Used = No (OCCN)
Track 1 : Dax E Used = No (OCCN)
Track 1 : Dax F Used = No (OCCN)
Track 1 : Dax G Used = No (OCCN)

GCP: track 1
Track 1 : GCP Freq Category = Standard (Field)
Track 1 : GCP Frequency = 211 Hz (Field, TCN)
Track 1 : Approach Distance = 3180 ft (Field, TCN)
Track 1 : Uni/Bi/Sim-Bidirnl = Bidirnl (OCCN, TCN)
Track 1 : GCP Transmit Level = High (Field, TCN)
Track 1 : Island Connection = Isl1 (OCCN)
Track 1 : Directionally Wired = No (OCCN)
Track 1 : Island Distance = 125 ft (Field, TCN)
Track 1 : Computed Distance = 9999 ft (Field, TCN)
Track 1 : Linearization Steps = 100 (Field, TCN)

GCP: track 1 enhanced det
Track 1 : Inbound PS Sensitivity = High (Field)
Track 1 : Speed Limiting Used = Yes (Field)
Track 1 : Outbound False Act Lvl = Normal (Field)
Track 1 : Outbound PS Timer = 20 sec (Field)
Track 1 : Trailing Switch Logic = On (Field)
Track 1 : Post Joint Detn Time = 15 sec (OCCN)
Track 1 : Adv Appr Predn = No (OCCN)
Track 1 : Cancel Pickup Delay = This Isl (OCCN)

GCP: track 1 BIDAX RX
Track 1 : BIDAX To RX Appr = Not Used (OCCN)

GCP: track 1 BIDAX TX
Track 1 : BIDAX To TX Appr = Not Used (OCCN)

GCP: track 1 prime
Track 1 : Prime Warning Time = 31 sec (OCCN)
Track 1 : Prime Offset Distance = 0 ft (Field)
Track 1 : Switch MS EZ Level = 10 (OCCN)
Track 1 : Prime MS/GCP Mode = Pred (OCCN)
Track 1 : Prime Pickup Delay = 30 sec (OCCN)
Track 1 : Prime UAX = IP (OCCN)
Track 1 : Prime UAX Pickup = 22 sec (OCCN)

GCP: track 1 pos start
Track 1 : Positive Start = Off (OCCN)
Track 1 : Sudden Shnt Det Used = No (OCCN)
Track 1 : Low EZ Detection Used = No (OCCN)

GCP: track 1 MS Control
Track 1 : MS/GCP Ctrl IP Used = No (OCCN)
Track 1 : MS Sensitivity Level = 0 (Field)
Track 1 : Compensation Level = 1300 (Field, TCN)
Track 1 : Warn Time-Ballast Comp = High (Field, TCN)
Track 1 : Low EX Adjustment = 39 (Field)
Track 1 : Bidirn Dax Passthru = No (OCCN)
Track 1 : False Act on Train Stop = No (Field)
Track 1 : EX Limiting Used = Yes (Field)
Track 1 : EZ Correction Used = Yes (Field)

ISLAND: track 1
Track 1 : Isl Frequency = 4.9 kHz (Field)
Track 1 : Pickup Delay (2s +) = 0 sec (OCCN)
Track 1 : Isl Enable IP Used = No (OCCN)

AND: track Anding
AND 1 XR Used = Yes (OCCN)
AND 2 Used = Yes (OCCN)
AND 3 Used = No (OCCN)
AND 4 Used = No (OCCN)
AND 5 Used = No (OCCN)
AND 6 Used = No (OCCN)
AND 7 Used = No (OCCN)
AND 8 Used = No (OCCN)

AND: AND 1 XR
AND 1 XR Track 1 = Prime (OCCN)
AND 1 Enable Used = Yes (OCCN)
And 1 Enable Pickup = 0 sec (OCCN)
AND 1 Enable Drop = 0 sec (OCCN)
AND 1 Wrap Used = No (OCCN)

AND: AND 2
AND 2 Track 1 = Not Used (OCCN)
AND 2 Enable Used = Yes (OCCN)
AND 2 Enable Pickup = 0 sec (OCCN)
AND 2 Enable Drop = 0 sec (OCCN)
AND 2 Wrap Used = No (OCCN)

ADVANCED: MS restart
MS/GCP Restart Used = No (OCCN)

ADVANCED: out of service
OOS Control = OOS IPs (OCCN)

ADVANCED: out of service 2
T1 OOS Control = OOS Input 1 (OCCN)
T1 OOS Controls = GCP and Island (OCCN)

ADVANCED: track wrap circuits
Wrap LOS Timer = 5 sec (OCCN)
Track 1 Wrap Used = No (OCCN)

ADVANCED: trk 1 overrides
Track 1 : All Predictors Override Used = No (OCCN)

ADVANCED: OR logic
OR 1 Used = No (OCCN)
OR 2 Used = No (OCCN)
OR 3 Used = No (OCCN)
OR 4 Used = No (OCCN)

ADVANCED: Internal I/O 1
Pass Thrus = Yes (OCCN)
Int.1 Sets = AND 2 Enable (OCCN)
Int.1 Set by = Passthru State 1 (OCCN)
Int.2 Sets = AND 2 Enable (OCCN)
Int.2 Set by = Passthru State 2 (OCCN)
Int.3 Sets = GD 1.1 (OCCN)
Int.3 Set by = Passthru State 1 (OCCN)
Int.4 Sets = GD 2.1 (OCCN)
Int.4 Set by = Passthru State 2 (OCCN)

ADVANCED: Internal I/O 2
Int.5 Sets = Not Used (OCCN)
Int.5 Set by = Not Used (OCCN)
Int.6 Sets = Not Used (OCCN)
Int.6 Set by = Not Used (OCCN)
Int.7 Sets = Not Used (OCCN)
Int.7 Set by = Not Used (OCCN)
Int.8 Sets = Not Used (OCCN)
Int.8 Set by = Not Used (OCCN)

ADVANCED: Internal I/O 3
Int.9 Sets = Not Used (OCCN)
Int.9 Set by = Not Used (OCCN)
Int.10 Sets = Not Used (OCCN)
Int.10 Set by = Not Used (OCCN)
Int.11 Sets = Not Used (OCCN)
Int.11 Set by = Not Used (OCCN)
Int.12 Sets = Not Used (OCCN)
Int.12 Set by = Not Used (OCCN)

ADVANCED: Internal I/O 4
Int.13 Sets = Not Used (OCCN)
Int.13 Set by = Not Used (OCCN)
Int.14 Sets = Not Used (OCCN)
Int.14 Set by = Not Used (OCCN)
Int.15 Sets = Not Used (OCCN)
Int.15 Set by = Not Used (OCCN)
Int.16 Sets = Not Used (OCCN)
Int.16 Set by = Not Used (OCCN)

ADVANCED: site options
Daylight Savings = On (Field)
Units = Standard (OCCN)
Maint Call Rpt IP Used = No (OCCN)
Emergency Activate IP = No (OCCN)
EZ/EX Logging = Change (Field)
EZ/EX Point Change = 3 (Field)

SSCC
Gates Used = Yes (OCCN)
SSCC1+2 GPs Coupled = Yes (OCCN)
Min Activation = 21 sec (OCCN)
Rmt Activation Cancel = 3 min (OCCN)
Bell On Gate Rising = No (OCCN)
Mute Bell On Gate Down = Yes (OCCN)
SSCCIV Controller Used = No (OCCN)

SSCC: 1
SSCC-1 Activation = AND 1 XR (OCCN)
SSCC-1 Gate Delay = 4 sec (OCCN)
SSCC-1 Number of GPs = 1 (OCCN)
SSCC-1 Number of GDs = 1 (OCCN)
SSCC 1 : Flash Rate = 55 (OCCN)
SSCC 1 : Low Battery Detection = No (Field)
SSCC 1 : Flash Sync = master (OCCN)
SSCC 1 : Invert Gate Output = No (OCCN)
SSCC 1 : Lamp Neutral Test = Off (Field)
Aux-1 Xng Ctrl Used = No (OCCN)

SSCC: 2
SSCC-2 Activation = AND 1 XR (OCCN)
SSCC-2 Gate Delay = 4 sec (OCCN)
SSCC-2 Number of GPs = 0 (OCCN)
SSCC-2 Number of GDs = 1 (OCCN)
SSCC 2 : Flash Rate = 55 (OCCN)
SSCC 2 : Low Battery Detection = No (Field)
SSCC 2 : Flash Sync = slave (OCCN)
SSCC 2 : Invert Gate Output = No (OCCN)
SSCC 2 : Lamp Neutral Test = Off (Field)
Aux-2 Xng Ctrl Used = No (OCCN)

OUTPUT: assignment page 1
OUT 1.1 = AND 1 XR (OCCN)
OUT 1.2 = AND 2 (OCCN)

INPUT: assignment page 1
IN 1.1 = T1 Prime UAX (OCCN)
IN 1.2 = Not Used (OCCN)

IO: assignment SSCC
OUT GC 1 = Gate Output 1 (OCCN)
OUT GC 2 = Gate Output 2 (OCCN)
IN 7.1 = AND 1 XR Enable (OCCN)
IN 7.2 = Not Used (OCCN)
IN 7.3 = Not Used (OCCN)
IN 7.4 = Passthru State 1 (OCCN)
IN 7.5 = GP 1.1 (OCCN)
IN 8.1 = Out Of Service IP 1 (OCCN)
IN 8.2 = Not Used (OCCN)
IN 8.3 = Not Used (OCCN)
IN 8.4 = Passthru State 2 (OCCN)
IN 8.5 = Not Used (OCCN)

SEAR
SEAR Subnode = 99 (OCCN)
DI 1 = General1 (OCCN)
DI 2 = Gnd Flt Tester 1 (OCCN)
Rly 1 = Ground Fault Test (OCCN)
Rly 2 = AC Control (OCCN)

SEAR: Inputs
SP 2.1 = POK 1 (OCCN)
SP 3.1 = Not Used (OCCN)
SP 4.1 = Not Used (OCCN)
SP 5.1 = Not Used (OCCN)
SP 6.1 = Not Used (OCCN)

SEAR: slot 1-4 Inputs
IN 1.2 = Not Used (OCCN)
IN 2.1 = Not Used (OCCN)
IN 2.2 = POK 2 (OCCN)
IN 3.1 = Not Used (OCCN)
IN 3.2 = Not Used (OCCN)
IN 4.1 = Not Used (OCCN)
IN 4.2 = Not Used (OCCN)

SEAR: Inputs slot 5
IN 5.1 = Not Used (OCCN)
IN 5.2 = Not Used (OCCN)

SEAR: Inputs slot 6
IN 6.1 = Not Used (OCCN)
IN 6.2 = Not Used (OCCN)

SEAR: slot 7-8 Inputs
IN 7.2 = Not Used (OCCN)
IN 7.3 = TSS 1 (OCCN)
IN 8.2 = Not Used (OCCN)
IN 8.3 = TSS 2 (OCCN)
IN 8.5 = General2 (OCCN)

SITE: programming
Radio Subnode = 1 (Field)
Field Password = Off (OCCN)
Low Battery Enabled = Off (Field)

Configuration Package File

Filename: gil-112.25.pac

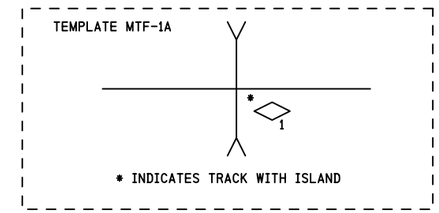

NOTES
1) DISTANCE(S) TO BE VERIFIED AT INSTALLATION
INDICATE SELECTED PROGRAMMED VALUE IF DIFFERENT THAN SHOWN
REFER TO 4000 GCP INSTRUCTION/INSTALLATION MANUAL
FOR PROGRAMMING PARAMETERS

2) PROGRAM TEXT HIGHLIGHTED IN RED INDICATES 4000 PROGRAM
MODIFICATIONS TO DEFAULT PROGRAM VALUES

3) EACH CONSTANT WARNING DEVICE SYSTEM TO BE PROGRAMMED TO
CONVERT TO A MOTION SENSOR 300 FEET FROM EDGE OF ROAD
TRAVELLED WAY
SHUNT TRACK 300 FEET FROM EDGE OF ROAD TRAVELLED WAY
AND NOTE "EZ" VALUE
PROGRAM EACH SYSTEM WITH THE INDICATED "EZ" VALUE +2

4) VERIFY SET TIMER VALUE TO MATCH ACTUAL TRAIN MOVEMENT
WITHIN THE CROSSING APPROACH CIRCUITS

IRC 30 AUG 2013

PROPOSED
DESIGN NO. 13-0003
RED-IN YELLOW-OUT

AS INSTALLED
DATE _____
BY _____
(PRINT NAME)

SUBMIT CFG FILES

PROPOSED			REVISIONS	D	C	COMPLETED			C
D	M	Y				D	M	Y	

REGION SOUTHERN
SUB. GILMAN 349

SIGNALS AND COMMUNICATIONS HOMEWOOD
30 AUGUST 2013
DES. NDH
CH. BJW

GCP 4000
PROGRAM INFORMATION
GIBSON CITY, IL
300N

GIL-112.25-03

DOT# 289 368D

INVENSYS RAIL CORPORATION

DES.: NDH	DATE: 08/30/13	JOB NO.: JXXD03624	
CKD.: BJW	ISSUE DATE: N/A	EST. NO.: XP-6921	
DRN.: NDH	PLAN NO. IN/A	SHEET 3 OF 15	
P TIME: 07:54	P DATE: 19-MAR-2014	CAD ID.: GIL-112.25-03	

INVENSYS RAIL CORP.
LOUISVILLE DIVISION, LOUISVILLE, KY

gil-112.25-03.dgn
19-MAR-2014

REVISIONS				
NO.	DATE	BY	DESCRIPTION	APP. BY
1				
2				
3				
4				
5				

TO CONFIGURE SEARII & SEARIII PRESS SITE SETUP KEY. USE ARROW KEYS TO MAKE SELECTION, PRESS ENTER AFTER SELECTION HAS BEEN MADE.

STAGE 1

PROGRAM MENU QUESTIONS	PROGRAM	OPTIONS/RANGE
DATE/TIME?	CURRENT DATE/TIME	CURRENT DATE/TIME
AUTOMATIC DST ADJUSTMENT?	YES	YES, NO
TIME ZONE?	CENTRAL	EASTERN, CENTRAL, MOUNTAIN, PACIFIC, ALASKA, HAWAII, ATLANTIC, SASKATCHEWAN, NEW FOUNLAND
SITE NAME?	300N	STREET NAME
MILE POST?	112.25	MILEAGE
DOT/CROSSING IS #?	289 368D	123456A
TESTER TYPE?	CROSSING	CROSSING, WAYSIDE
DATE FORMAT?	dd-mm-yyyy	mm-dd-yyyy, dd-mm-yyyy
TEMPERATURE FORMAT?	FAHRENHEIT	FAHRENHEIT, CELSIUS
INDICATE HOLD?	0	SECONDS
SITE TYPE?		NO COM, BULLHORN, DIALUP, NODE, COLLECTOR
SITE ATCS ADDRESS?		7.RRR.LLL.GGG.99.01
OFFICE ATCS ADDRESS?		2.RRR.NN.DDDD
(FOR NODE USE) PRIMARY HOP ADDR?		7.RRR.LLL.GGG.00.01
(FOR NODE USE) BACKUP HOP ADDR1?		7.RRR.LLL.GGG.00.01
(FOR NODE USE) BACKUP HOP ADDR2?		7.RRR.LLL.GGG.00.01
(FOR COLLECTOR USE) POLL ID?		1-99
(FOR COLLECTOR USE) MODE?		GEN/ATCS, GENISYS
(FOR COLLECTOR USE) WAMS/XID?		ENABLED, DISABLE
(FOR COLLECTOR USE) OFFICE COMM. DEVICE?		DIRECT (RS232) MCM (RS232) MCM (ECHELON) SREAD SPEC (ECHELON) DIAL MODEM (RS232) S200 RADIO (RS422)
(FOR COLLECTOR USE) OFFICE PHONE NUMBER?		PHONE NUMBER OF WAMS
(FOR COLLECTOR USE) INIT STRING?		OPTIONAL HAYES MODEM INITIALIZATION STRING
FIELD COMM. DEVICE?		VHF COMM. (ECHELON) VHF COMM. (RS232) SPREAD SPEC (ECHELON) SPREAD SPEC (RS232)
USER PORT?	57600, 8, N, 1, N	BAUD, DATA BITS, PARITY, STOP BITS, FLOW CONTROL
AUX PORT?	9600, 8, N, 1, N	BAUD, DATA BITS, PARITY, STOP BITS, FLOW CONTROL

YOU WILL NOW SEE A MESSAGE "PLEASE WAIT COMPILING STAGE 1" CONTINUE TO NEXT PROGRAM MENU QUESTIONS.

NOTES:

1) ASSIGNED DTMF CODES:

ACTIVATE CROSSING (MAIN TRACK - 1T1)	36811#
DE-ACTIVATE CROSSING (MAIN TRACK - 1T1)	36810#
ACTIVATE CROSSING (MAINTENANCE)	36871#
DE-ACTIVATE CROSSING (MAINTENANCE)	36870#

2) ADDITIONAL OPTIONS: DUAL CROSSING, EXTERNAL ENTRANCE GATE CONTROLLERS.

STAGE 2

QUESTION	PROGRAM	SELECTION 1 (MINIMUM)	SELECTION 2 (MAXIMUM)	CONDITION FOR MENU DISPLAY
RESET NAMES / MODULES ?	NO	YES	NO	ALWAYS
CROSSING CONFIGURATION ?	NORMAL	NORMAL	SPLIT GATE (NOTE 2)	ALWAYS
AND1 USED AS XR?	YES	NO	YES	ALWAYS
AND2 USED AS XR?	NO	NO	YES	ALWAYS
AND3 USED AS XR?	NO	NO	YES	ALWAYS
AND4 USED AS XR?	NO	NO	YES	ALWAYS
AND5 USED AS XR?	NO	NO	YES	ALWAYS
AND6 USED AS XR?	NO	NO	YES	ALWAYS
AND7 USED AS XR?	NO	NO	YES	ALWAYS
AND8 USED AS XR?	NO	NO	YES	ALWAYS
XR CONTROLLED BY FOREIGN RR?	NO	AND1	AND8	CROSSING CONFIGURATION = SPIT GATE
ENTRANCE GATES ?	2	0	8	ALWAYS
GATE CONTROLLED BY FOREIGN RR?	NONE	NONE	TSS4	CROSSING CONFIGURATION = SPIT GATE
GATE DESCENT TIME (SECONDS)	11	7	20	GATES > 0
GATE POSITION FAIL TIME (SECONDS) ?	17	10	60	GATES > 0
BATTERY BANKS ?	2	1	3	ALWAYS
BATT MON USED ?	NO	NO	YES	ALWAYS
INTERNAL CROSSING CONTROLLERS ?	2	0	2	ALWAYS
EXTERNAL CROSSING CONTROLLERS ?	0	0	2	CROSSING CONTROLLER = YES
ALLOW DTMF CONTROL ?	YES	NO	YES	ALWAYS
COUNTRY	US	CANADA	US	ALLOW DTMF CONTROL = YES
DTMF CONTROL WITH PREMPTION ?	NO	NO	YES	ALLOW DTMF CONTROL = YES
POK ANNOUNCEMENT TO VHF ?	NO	NO	YES	ALLOW DTMF CONTROL = YES
VHF VOICE CHANNEL ?	1	1	8	ALLOW DTMF CONTROL = YES
VHF DATA CHANNEL ?	1	1	8	ALLOW DTMF CONTROL = YES
DIGIT #1 ?	3	0	9	ALLOW DTMF CONTROL = YES
DIGIT #2 ?	6	0	9	ALLOW DTMF CONTROL = YES
DIGIT #3 ?	8	0	9	ALLOW DTMF CONTROL = YES
DIGIT #4 ?	N/A	0	9	ALLOW DTMF CONTROL = YES
DIGIT #5 ?	N/A	0	9	ALLOW DTMF CONTROL = YES
TIME-OUT FOR DTMF REQUEST #1 ?	180	0	240	ALLOW DTMF CONTROL = YES
TIME-OUT FOR DTMF REQUEST #2 ?	0	0	240	ALLOW DTMF CONTROL = YES
TIME-OUT FOR DTMF REQUEST #3 ?	0	0	240	ALLOW DTMF CONTROL = YES
TIME-OUT FOR DTMF REQUEST #4 ?	0	0	240	ALLOW DTMF CONTROL = YES

STAGE 2 CONT'D

QUESTION	PROGRAM	SELECTION 1 (MINIMUM)	SELECTION 2 (MAXIMUM)	CONDITION FOR MENU DISPLAY
TIME-OUT FOR DTMF REQUEST #5 ?	0	0	240	ALLOW DTMF CONTROL = YES
TIME-OUT FOR DTMF REQUEST #6 ?	0	0	240	ALLOW DTMF CONTROL = YES
TIME-OUT FOR DTMF REQUEST #7 ?	180	0	240	ALLOW DTMF CONTROL = YES
ISLAND RELEASE DTMF REQUEST #1 ?	1	0	6	TIME-OUT FOR DTMF REQUEST #1 > 0
ISLAND RELEASE DTMF REQUEST #2 ?	0	0	6	TIME-OUT FOR DTMF REQUEST #2 > 0
ISLAND RELEASE DTMF REQUEST #3 ?	0	0	6	TIME-OUT FOR DTMF REQUEST #3 > 0
ISLAND RELEASE DTMF REQUEST #4 ?	0	0	6	TIME-OUT FOR DTMF REQUEST #4 > 0
ISLAND RELEASE DTMF REQUEST #5 ?	0	0	6	TIME-OUT FOR DTMF REQUEST #5 > 0
ISLAND RELEASE DTMF REQUEST #6 ?	0	0	6	TIME-OUT FOR DTMF REQUEST #6 > 0
ISLAND RELEASE DTMF REQUEST #7 ?	0	0	6	TIME-OUT FOR DTMF REQUEST #7 > 0
ILOD MODULES ?	2	0	4	ALWAYS
ANY LED BULBS USED ?	YES	NO	YES	ILOD MODULES > 0
AUTO INSPECTION ?	NO	YES	NO	ALWAYS
BELL SENSORS ?	1	0	8	ALWAYS
BELL SENSORS TSS1 ?	YES	NO	YES	BELL SENSORS > 0
BELL SENSORS TSS2 ?	NO	NO	YES	BELL SENSORS > 0
BELL SENSORS TSS3 ?	NO	NO	YES	BELL SENSORS > 0
BELL SENSORS TSS4 ?	NO	NO	YES	BELL SENSORS > 0
BELL SENSORS TSS5 ?	NO	NO	YES	BELL SENSORS > 0
BELL SENSORS TSS6 ?	NO	NO	YES	BELL SENSORS > 0
BELL SENSORS TSS7 ?	NO	NO	YES	BELL SENSORS > 0
BELL SENSORS TSS8 ?	NO	NO	YES	BELL SENSORS > 0
BELL ON ?	GATES LOWERING	GATES LOWERING		BELL SENSORS > 0
		GATES MOVING		
		ALWAYS		
BATTERY PERCENT FOR ALARM ?	85	0	100	ALWAYS
GFT'S ?	YES	YES	NO	ALWAYS
BATTERIES ON GFT1 ?	2	1	2	GFT'S = YES
GATE UP SOURCE ?	GP	TSS	GP	GATE > 0
GATE DOWN SOURCE ?	GD	TIP , TSS	GD	GATES > 0
USE CELL MODEM NON-CRITICAL FEATURE ?	NO	NO	YES	ALWAYS
FULL APPROACH MOVE ALARMS ?	ACTIVATE	ACTIVATE		ALWAYS
		DO NOT ACTIVATE		

YOU WILL NOW SEE A MESSAGE "PLEASE WAIT COMPILING STAGE 2" CONTINUE TO NEXT PROGRAM MENU QUESTIONS.

STAGE 3

PROGRAM MENU QUESTIONS	
EDIT DIGITAL INPUTS	NO
EDIT BATTERIES	NO
EDIT RELAYS	NO
EDIT TEST LEDS	NO
EDIT ILOD SENSORS	NO
EDIT VHF SETTINGS	NO
GCP4K ATCS SUBNODE?	16

SAVE CONFIGURATION

gil-112.25-04.dgn
19-MAR-2014

IRC 30 AUG 2013

PROPOSED
DESIGN NO. 13-0003
RED-IN YELLOW-OUT

AS INSTALLED
DATE _____
BY _____
(PRINT NAME)

SEARII EXECUTIVE 9V725 REV. A01U, SEARII APPLICATION 9VC45 REV. A01A

PROPOSED D	PROPOSED M	PROPOSED Y	REVISIONS	D	C	COMPLETED D	COMPLETED M	COMPLETED Y	C

REGION SOUTHERN
SUB. GILMAN 349

SIGNALS AND COMMUNICATIONS HOMEWOOD
30 AUGUST 2013
DES. NDH
CH. BJW

GCP 4000/SEAR III
SETUP & PROGRAM
GIBSON CITY, IL
300N

GIL-112.25-04

DOT# 289 368D

INVENSYS RAIL CORPORATION

DES.: NDH	DATE: 08/30/13	JOB NO.: UXXD03624	
CKD.: BJW	ISSUE DATE: N/A	EST. NO. XP-6921	
DRN.: NDH	PLAN NO. 1N/A	SHEET 4 OF 15	
P TIME: 07:55	P DATE: 19-MAR-2014	CAD ID.: GIL-112.25-04	

INVENSYS RAIL CORP.
LOUISVILLE DIVISION, LOUISVILLE, KY