REVISIONS				
NO.	DATE	BY	DESCRIPTION	APP. BY
1				
2				
3				
4				
5				

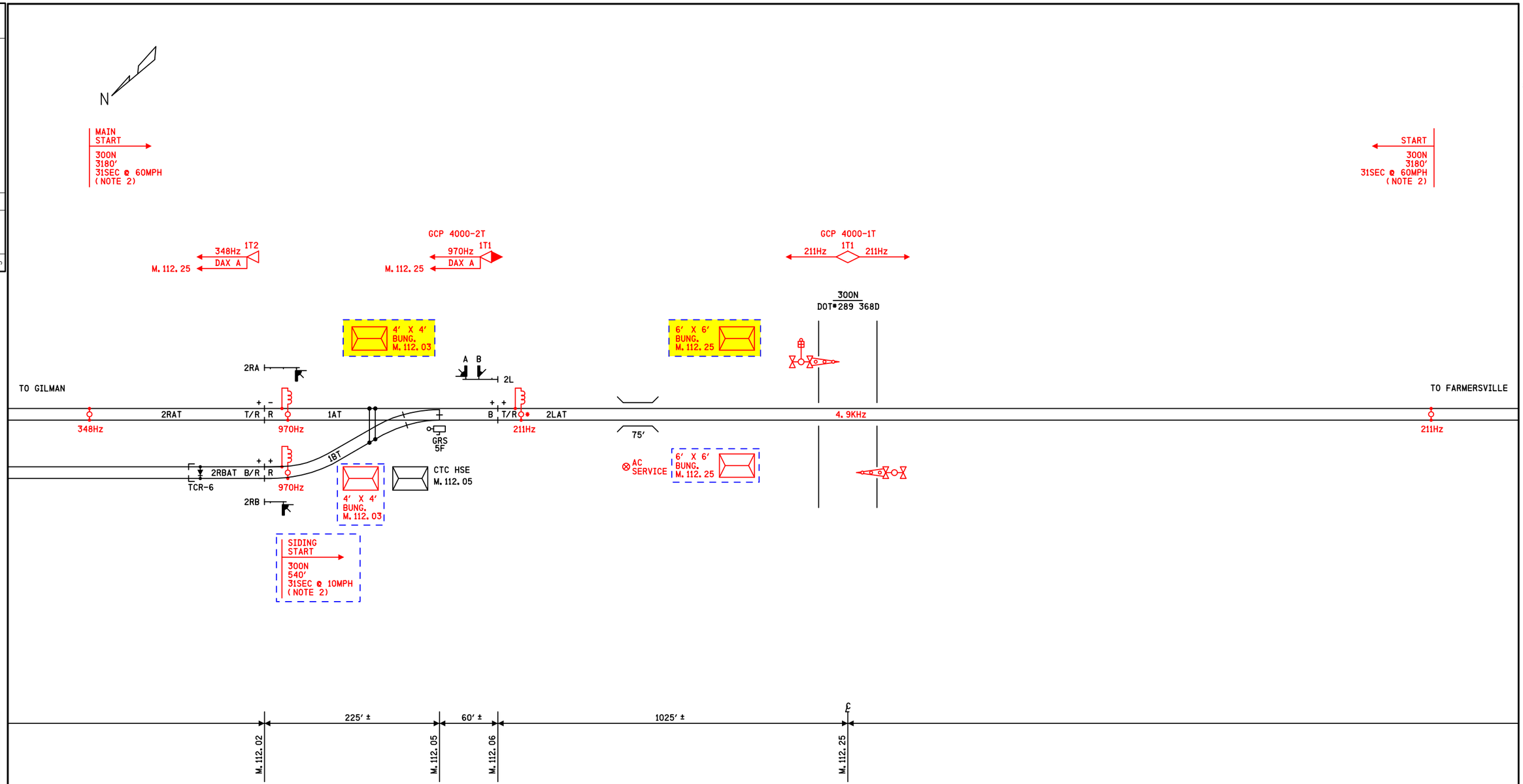

NOTES

1) HIGHWAY CROSSING TRACK CONNECTIONS TO BE 4 WIRE UNLESS NOTED WITH * IN TRACK CIRCUIT, THEN 6 WIRE SEE LOCATION PLAN FOR TRACK WIRING

2) APPROACH DISTANCE MEASURED FROM TRACK LEADS

DENOTES MULTIFREQUENCY NARROW-BAND SHUNT *62775-1543

DENOTES MULTIFREQUENCY NARROW-BAND SHUNT *62775-3497 WITH SIMULATED TRACK INDUCTOR 8V617-1000

DENOTES MULTIFREQUENCY NARROW-BAND SHUNT *62775-1543 WITH SIMULATED TRACK INDUCTOR 8V617-2200

DENOTES TRACK RECTIFIER TCR-6

IRC 30 AUG 2013

PROPOSED
DESIGN NO. 13-0003
RED-IN YELLOW-OUT

AS INSTALLED
DATE _____
BY _____
(PRINT NAME)

PROPOSED D	M	Y	REVISIONS	D	C	COMPLETED D	M	Y	C
30	08	13	M. 112. 25 UPGRADE	KLT	BJW				
18	03	14	M. 112. 25 BUNG RELOCATE	NAD	BJW				

REGION SOUTHERN
SUB. GILMAN 349

SIGNALS AND COMMUNICATIONS HOMEWOOD
30 AUGUST 2013
DES. KLT
CH. BJW

TRACK PLAN
MILE 112. 02 TO MILE 112. 25

GIL-112. 02-T

INVENSYS RAIL CORPORATION

DES.: KLT	DATE: 08/30/13	JOB NO.: JXXD03624	
CKD.: BJW	ISSUE DATE: N/A	EST. NO.: XP-6921	
DRN.: KLT	PLAN NO.: N/A	SHEET N/A OF N/A	
P TIME: 07:52	P DATE: 19-MAR-2014	CAD ID.: GIL-112.02-T	

INVENSYS RAIL CORP.
LOUISVILLE DIVISION, LOUISVILLE, KY

gil-112.02-t.dgn
19-MAR-2014

REVISIONS				
NO.	DATE	BY	DESCRIPTION	APP. BY
1				
2				
3				
4				
5				

CONTENT	SHEET #
TRACK LAYOUT & INDEX	01
GCP 4000 CHASSIS & MODULE LAYOUT	02
GCP 4000 PROGRAM INFORMATION	03
GCP 4000 CALIBRATION HISTORY	04
GCP 4000 TRACK 1 & 2 MODULE CONNECTIONS	05
GCP 4000 CPUII+	06
DC DISTRIBUTION	07
AC DISTRIBUTION	08
BUNGALOW LAYOUT SIDE A, B, C & L.I.G.P.	09

gll-112.03-01.dgn
19-MAR-2014

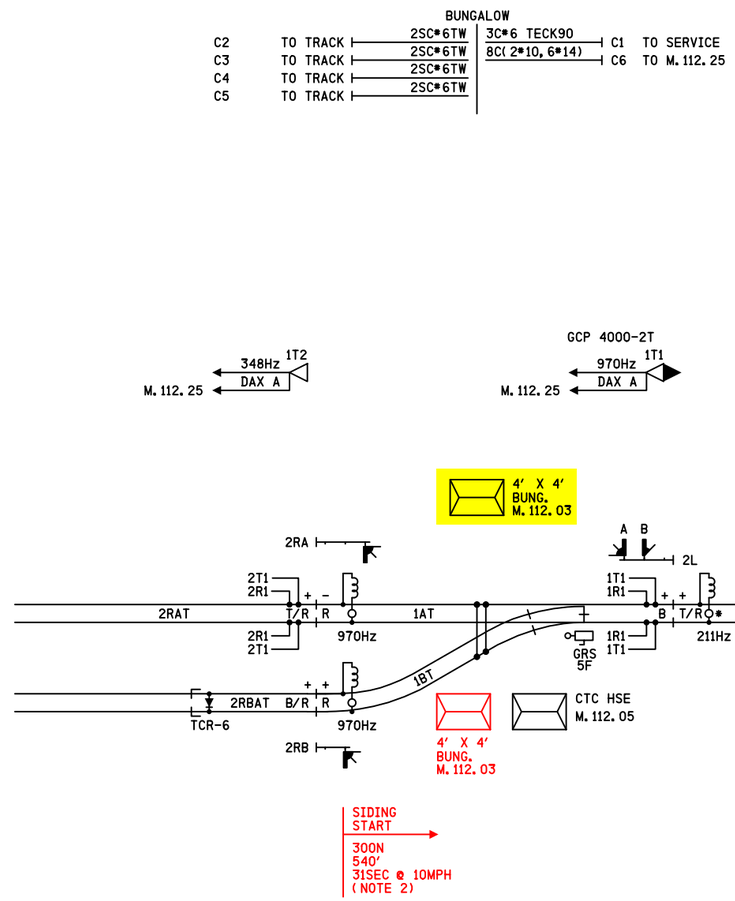

IRC 30 AUG 2013

PROPOSED
DESIGN NO. 13-0003
RED-IN YELLOW-OUT

AS INSTALLED
DATE _____
BY _____
(PRINT NAME)

NOTES

DENOTES MULTIFREQUENCY NARROW-BAND SHUNT #62775-3497 WITH SIMULATED TRACK INDUCTOR 8V617-1000

DENOTES MULTIFREQUENCY NARROW-BAND SHUNT #62775-1543 WITH SIMULATED TRACK INDUCTOR 8V617-2200

DENOTES TRACK RECTIFIER TCR-6

PROPOSED D	M	Y	REVISIONS	D	C	COMPLETED D	M	Y	C
18	03	14	M.112.26 BUNG RELOCATE	NAD	BJW				

REGION SOUTHERN
SUB. GILMAN 349

SIGNALS AND COMMUNICATIONS HOMEWOOD
30 AUGUST 2013
DES. NDH
CH. BJW

TRACK LAYOUT & INDEX

GIBSON CITY, IL
XING REMOTE

GIL-112.03-01

INVENSYS RAIL CORPORATION

DES.: NDH	DATE: 08/30/13	JOB NO.: UXXD03624	
CKD.: BJW	ISSUE DATE: N/A	EST. NO.: XP-6921	
DRN.: NDH	PLAN NO.: N/A	SHEET 1 OF 9	
P TIME: 07:52	P DATE: 19-MAR-2014	CAD ID.: GIL-112.03-01	

INVENSYS RAIL CORP.
LOUISVILLE DIVISION, LOUISVILLE, KY

REVISIONS				
NO.	DATE	BY	DESCRIPTION	APP. BY
1				
2				
3				
4				
5				

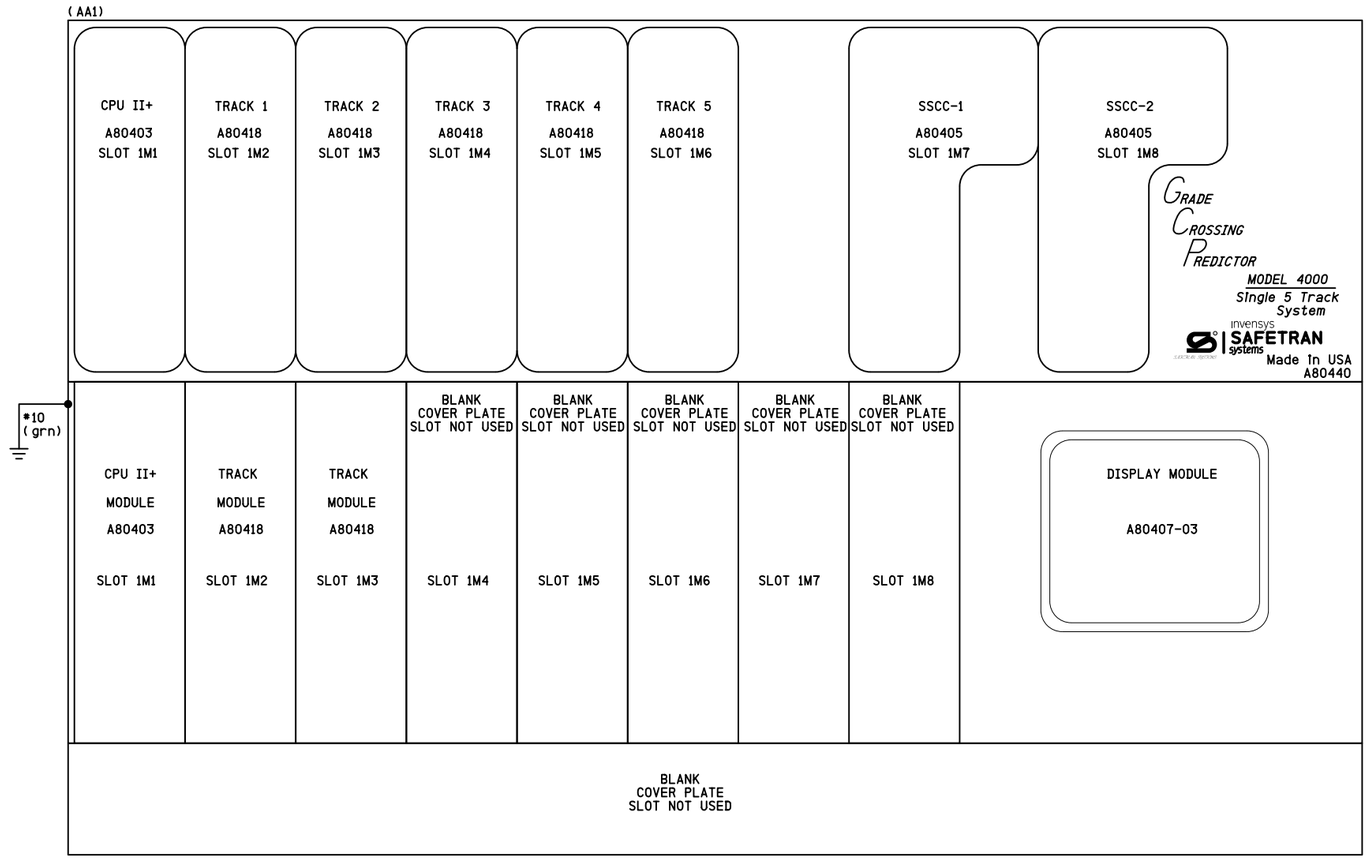

NOTES

1) DISABLE THE DISPLAY HEATER BY REMOVING JUMPER J-22 (LOCATED AT THE EDGE OF THE DISPLAY MODULE CARD THAT PLUGS INTO THE CHASSIS)

ATTENTION!

ENSURE THE DISPLAY MODULE HEATER IS DISABLED
LEAVING THE DISPLAY HEATER ENABLED WILL REDUCE THE AMOUNT OF BATTERY STANDBY TIME IN THE EVENT OF AN AC POWER FAILURE

HEATER FUNCTION IS JUMPER SELECTABLE ON THE DISPLAY MODULE BOARD
THREE OPTIONS ARE AVAILABLE
NORMAL LCD HTR (DEFAULT)
HI CURRENT
NO JUMPER (HEATER DISABLED)

IRC 30 AUG 2013

PROPOSED
DESIGN NO. 13-0003
RED-IN YELLOW-OUT

AS INSTALLED
DATE _____
BY _____
(PRINT NAME)

PROPOSED			REVISIONS	D	C	COMPLETED			C
D	M	Y				D	M	Y	

REGION SOUTHERN
SUB. GILMAN 349

SIGNALS AND COMMUNICATIONS HOMEWOOD
30 AUGUST 2013
DES. NDH
CH. BJW

GCP 4000
CHASSIS & MODULE LAYOUT
GIBSON CITY, IL
XING REMOTE

GIL-112.03-02

INVENSYS RAIL CORPORATION			
DES.: NDH	DATE: 08/30/13	JOB NO.: JXXD03624	
CKD.: BJW	ISSUE DATE: N/A	EST. NO.: XP-6921	
DRN.: NDH	PLAN NO.: N/A	SHEET 2 OF 9	
P TIME: 07:52	P DATE: 19-MAR-2014	CAD ID.: GIL-112.03-02	

INVENSYS RAIL CORP.
LOUISVILLE DIVISION, LOUISVILLE, KY

gil-112.03-02.dgn
19-MAR-2014

REVISIONS				
NO.	DATE	BY	DESCRIPTION	APP. BY
1				
2				
3				
4				
5				

Program Report

Location and SIN

DOT Number: 123456A
Milepost Number: 112.03
Site Name: XING REMOTE

SIN: 762010010016

MCF and Template Selection

MCF Name: GCP-T6X-02-2.mcf
MCF Revision: 022
MCFCRC: 79225F13

Template = 4A:6 Remotes (OCCN)

Check Numbers

Office Check Number: 365ED1F1
Config. Check Number: 05F61702
(Based on MCF Revision 022)

Program

BASIC: module configuration
Track 1/PSO 1 Slot = Track (OCCN)
Track 2/RIO 1 Slot = Track (OCCN)
Track 3/PSO 2 Slot = Not Used (OCCN)
Track 4/PSO 3 Slot = Not Used (OCCN)
Track 5/RIO 2 Slot = Not Used (OCCN)
Track 6/RIO 3 Slot = Not Used (OCCN)
SSCC-1 Slot = Not Used (OCCN)
SSCC-2 Slot = Not Used (OCCN)
SEAR Used = No (OCCN)

BASIC: MS/GCP operation
Track 1 : MS/GCP Operation = Yes (OCCN)
Track 2 : MS/GCP Operation = Yes (OCCN)

BASIC: Island operation
Track 1 : Island Used = No (OCCN)
Track 2 : Island Used = No (OCCN)

BASIC: radio Dax links
Radio DAX link A Used = No (OCCN)
Radio DAX link B Used = No (OCCN)

BASIC: Vital Comms links
Vital Comms link 1 Used = No (OCCN)
Vital Comms link 2 Used = No (OCCN)

PREDICTORS: track 1
Track 1 : Prime Used = No (OCCN)
Track 1 : Dax A Used = Yes (OCCN)
Track 1 : Dax B Used = No (OCCN)
Track 1 : Dax C Used = No (OCCN)
Track 1 : Dax D Used = No (OCCN)
Track 1 : Dax E Used = No (OCCN)
Track 1 : Dax F Used = No (OCCN)
Track 1 : Dax G Used = No (OCCN)

PREDICTORS: track 2
Track 2 : Prime Used = No (OCCN)
Track 2 : Dax A Used = Yes (OCCN)
Track 2 : Dax B Used = No (OCCN)
Track 2 : Dax C Used = No (OCCN)
Track 2 : Dax D Used = No (OCCN)
Track 2 : Dax E Used = No (OCCN)
Track 2 : Dax F Used = No (OCCN)
Track 2 : Dax G Used = No (OCCN)

GCP: track 1
Track 1 : GCP Freq Category = Standard (Field)
Track 1 : GCP Frequency = 970 Hz (Field, TCN)
Track 1 : Approach Distance = 285 ft (Field, TCN)
Track 1 : Uni/Bi/Sim-Bidirni = Sim. Bidirni (OCCN, TCN)
Track 1 : GCP Transmit Level = High (Field, TCN)
Track 1 : Island Connection = No Islands (OCCN)
Track 1 : Directionally Wired = No (OCCN)
Track 1 : Island Distance = 0 ft (Field, TCN)
Track 1 : Computed Distance = 9999 ft (Field, TCN)
Track 1 : Linearization Steps = 100 (Field, TCN)

GCP: track 1 enhanced det
Track 1 : Inbound PS Sensitivity = High (Field)
Track 1 : Speed Limiting Used = Yes (Field)
Track 1 : Outbound False Act Lvl = Normal (Field)
Track 1 : Outbound PS Timer = 20 sec (Field)
Track 1 : Trailing Switch Logic = On (Field)
Track 1 : Post Joint Detn Time = 15 sec (OCCN)
Track 1 : Adv Appr Predn = No (OCCN)
Track 1 : Cancel Pickup Delay = This Isl (OCCN)

GCP: track 1 BIDAX RX
Track 1 : BIDAX To RX Appr = Not Used (OCCN)

GCP: track 1 BIDAX TX
Track 1 : BIDAX To TX Appr = Not Used (OCCN)

GCP: track 1 Dax A
Track 1 : Dax A Warning Time = 31 sec (OCCN)
Track 1 : Dax A Offset Distance = 965 ft (Field)
Track 1 : Switch MS EZ Level = 0 (OCCN)
Track 1 : Pickup Delay Mode = Auto (OCCN)
Track 1 : Dax A MS/GCP Mode = Pred (OCCN)
Track 1 : Dax A Pickup Delay = 8 sec (OCCN)
Track 1 : Dax A Enable = Not Used (OCCN)

GCP: track 1 pos start
Track 1 : Positive Start = Off (OCCN)
Track 1 : Sudden Shnt Det Used = No (OCCN)
Track 1 : Low EZ Detection Used = No (OCCN)

GCP: track 1 MS Control
Track 1 : MS/GCP Ctrl IP Used = No (OCCN)
Track 1 : MS Sensitivity Level = 0 (Field)
Track 1 : Compensation Level = 1300 (Field, TCN)
Track 1 : Warn Time-Ballast Comp = Low (Field, TCN)
Track 1 : Low EX Adjustment = 39 (Field)
Track 1 : Bidirn Dax Passthru = No (OCCN)
Track 1 : False Act on Train Stop = No (Field)
Track 1 : EX Limiting Used = Yes (Field)
Track 1 : EZ Correction Used = Yes (Field)

GCP: track 2
Track 2 : GCP Freq Category = Standard (Field)
Track 2 : GCP Frequency = 348 Hz (Field, TCN)
Track 2 : Approach Distance = 1930 ft (Field, TCN)
Track 2 : Uni/Bi/Sim-Bidirni = Unidirni (OCCN, TCN)
Track 2 : GCP Transmit Level = High (Field, TCN)
Track 2 : Island Connection = No Islands (OCCN)
Track 2 : Directionally Wired = No (OCCN)
Track 2 : Island Distance = 0 ft (Field, TCN)
Track 2 : Computed Distance = 9999 ft (Field, TCN)
Track 2 : Linearization Steps = 100 (Field, TCN)

GCP: track 2 enhanced det
Track 2 : Inbound PS Sensitivity = High (Field)
Track 2 : Speed Limiting Used = Yes (Field)
Track 2 : Outbound False Act Lvl = Normal (Field)
Track 2 : Outbound PS Timer = 20 sec (Field)
Track 2 : Trailing Switch Logic = On (Field)
Track 2 : Post Joint Detn Time = 15 sec (OCCN)
Track 2 : Adv Appr Predn = No (OCCN)
Track 2 : Cancel Pickup Delay = This Isl (OCCN)

GCP: track 2 BIDAX RX
Track 2 : BIDAX To RX Appr = Not Used (OCCN)

GCP: track 2 BIDAX TX
Track 2 : BIDAX To TX Appr = Not Used (OCCN)

GCP: track 2 Dax A
Track 2 : Dax A Warning Time = 31 sec (OCCN)
Track 2 : Dax A Offset Distance = 1250 ft (Field)
Track 2 : Switch MS EZ Level = 0 (OCCN)
Track 2 : Pickup Delay Mode = Auto (OCCN)
Track 2 : Dax A MS/GCP Mode = Pred (OCCN)
Track 2 : Dax A Pickup Delay = 8 sec (OCCN)
Track 2 : Dax A Enable = Not Used (OCCN)

GCP: track 2 pos start
Track 2 : Positive Start = Off (OCCN)
Track 2 : Sudden Shnt Det Used = No (OCCN)
Track 2 : Low EZ Detection Used = No (OCCN)

GCP: track 2 MS Control
Track 2 : MS/GCP Ctrl IP Used = No (OCCN)
Track 2 : MS Sensitivity Level = 0 (Field)
Track 2 : Compensation Level = 1300 (Field, TCN)
Track 2 : Warn Time-Ballast Comp = Low (Field, TCN)
Track 2 : Low EX Adjustment = 39 (Field)
Track 2 : Bidirn Dax Passthru = No (OCCN)
Track 2 : False Act on Train Stop = No (Field)
Track 2 : EX Limiting Used = Yes (Field)
Track 2 : EZ Correction Used = Yes (Field)

AND: track Anding
AND 1 XR Used = No (OCCN)
AND 2 Used = Yes (OCCN)
AND 3 Used = No (OCCN)
AND 4 Used = No (OCCN)
AND 5 Used = No (OCCN)
AND 6 Used = No (OCCN)
AND 7 Used = No (OCCN)
AND 8 Used = No (OCCN)

AND: AND 2
AND 2 Track 1 = Dax A (OCCN)
AND 2 Track 2 = Dax A (OCCN)
AND 2 Enable Used = No (OCCN)
AND 2 Wrap Used = No (OCCN)

ADVANCED: MS restart
MS/GCP Restart Used = No (OCCN)

ADVANCED: out of service
OOS Control = OOS IPs (OCCN)

ADVANCED: out of service 2
T1 OOS Control = OOS Input 1 (OCCN)
T2 OOS Control = OOS Input 2 (OCCN)
T1 OOS Controls = GCP Only (OCCN)
T2 OOS Controls = GCP Only (OCCN)

ADVANCED: track wrap circuits
Wrap LOS Timer = 5 sec (OCCN)
Track 1 Wrap Used = No (OCCN)
Track 2 Wrap Used = No (OCCN)

ADVANCED: trk 1 overrides
Track 1 : All Predictors Override Used = No (OCCN)
Track 1 : Dax A Override Used = No (OCCN)

ADVANCED: trk 2 overrides
Track 2 : All Predictors Override Used = No (OCCN)
Track 2 : Dax A Override Used = No (OCCN)

ADVANCED: OR logic
OR 1 Used = No (OCCN)
OR 2 Used = No (OCCN)
OR 3 Used = No (OCCN)
OR 4 Used = No (OCCN)

ADVANCED: Internal I/O 1
Pass Thrus = No (OCCN)
Int. 1 Sets = Not Used (OCCN)
Int. 1 Set by = Not Used (OCCN)
Int. 2 Sets = Not Used (OCCN)
Int. 2 Set by = Not Used (OCCN)
Int. 3 Sets = Not Used (OCCN)
Int. 3 Set by = Not Used (OCCN)
Int. 4 Sets = Not Used (OCCN)
Int. 4 Set by = Not Used (OCCN)

ADVANCED: Internal I/O 2
Int. 5 Sets = Not Used (OCCN)
Int. 5 Set by = Not Used (OCCN)
Int. 6 Sets = Not Used (OCCN)
Int. 6 Set by = Not Used (OCCN)
Int. 7 Sets = Not Used (OCCN)
Int. 7 Set by = Not Used (OCCN)
Int. 8 Sets = Not Used (OCCN)
Int. 8 Set by = Not Used (OCCN)

ADVANCED: Internal I/O 3
Int. 9 Sets = Not Used (OCCN)
Int. 9 Set by = Not Used (OCCN)
Int. 10 Sets = Not Used (OCCN)
Int. 10 Set by = Not Used (OCCN)
Int. 11 Sets = Not Used (OCCN)
Int. 11 Set by = Not Used (OCCN)
Int. 12 Sets = Not Used (OCCN)
Int. 12 Set by = Not Used (OCCN)

ADVANCED: Internal I/O 4
Int. 13 Sets = Not Used (OCCN)
Int. 13 Set by = Not Used (OCCN)
Int. 14 Sets = Not Used (OCCN)
Int. 14 Set by = Not Used (OCCN)
Int. 15 Sets = Not Used (OCCN)
Int. 15 Set by = Not Used (OCCN)
Int. 16 Sets = Not Used (OCCN)
Int. 16 Set by = Not Used (OCCN)

ADVANCED: site options
Daylight Savings = On (Field)
Units = Standard (OCCN)
Maint Call Rpt IP Used = No (OCCN)
Emergency Activate IP = No (OCCN)
EZ/EX Logging = Change (Field)
EZ/EX Point Change = 3 (Field)

OUTPUT: assignment page 1
OUT 1.1 = AND 2 (OCCN)
OUT 1.2 = Not Used (OCCN)
OUT 2.1 = Not Used (OCCN)
OUT 2.2 = Not Used (OCCN)

INPUT: assignment page 1
IN 1.1 = Out Of Service IP 1 (OCCN)
IN 1.2 = Not Used (OCCN)
IN 2.1 = Out Of Service IP 2 (OCCN)
IN 2.2 = Not Used (OCCN)

SITE: programming
Radio Subnode = 1 (Field)
Field Password = Off (OCCN)
Low Battery Enabled = Off (Field)

Configuration Package File

Filename: gil-112.03.pac

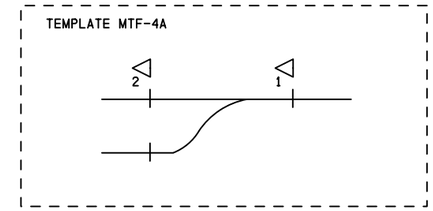

NOTES
1) DISTANCE(S) TO BE VERIFIED AT INSTALLATION
INDICATE SELECTED PROGRAMMED VALUE IF DIFFERENT THAN SHOWN
REFER TO 4000 GCP INSTRUCTION/INSTALLATION MANUAL
FOR PROGRAMMING PARAMETERS

2) PROGRAM TEXT HIGHLIGHTED IN RED INDICATES 4000 PROGRAM
MODIFICATIONS TO DEFAULT PROGRAM VALUES

3) T1 & T2 EACH CONSTANT WARNING DEVICE SYSTEM TO BE PROGRAMMED TO
CONVERT TO A MOTION SENSOR 300 FEET FROM EDGE OF ROAD
TRAVELLED WAY
SHUNT TRACK 300 FEET FROM EDGE OF ROAD TRAVELLED WAY
AND NOTE "EZ" VALUE
PROGRAM EACH SYSTEM WITH THE INDICATED "EZ" VALUE +2

4) VERIFY SET TIMER VALUE TO MATCH ACTUAL TRAIN MOVEMENT
WITHIN THE CROSSING APPROACH CIRCUITS

IRC 30 AUG 2013

PROPOSED
DESIGN NO. 13-0003
RED-IN YELLOW-OUT

AS INSTALLED
DATE _____
BY _____
(PRINT NAME)

SUBMIT CFG FILES

PROPOSED			REVISIONS	D	C	COMPLETED			C
D	M	Y				D	M	Y	

REGION SOUTHERN
SUB. GILMAN 349

SIGNALS AND COMMUNICATIONS HOMEWOOD
30 AUGUST 2013
DES. NDH
CH. BJW

GCP 4000
PROGRAM INFORMATION
GIBSON CITY, IL
XING REMOTE

GIL-112.03-03

gil-112.03-03.dgn
19-MAR-2014

INVENSYS RAIL CORPORATION			
DES.: NDH	DATE: 08/30/13	JOB NO.: JXXD03624	
CKD.: BJW	ISSUE DATE: N/A	EST. NO.: XP-6921	
DRN.: NDH	PLAN NO.: N/A	SHEET 3 OF 9	
P TIME: 07:52	P DATE: 19-MAR-2014	CAD ID.: GIL-112.03-03	

INVENSYS RAIL CORP.
LOUISVILLE DIVISION, LOUISVILLE, KY

REVISIONS			
NO.	DATE	BY	DESCRIPTION	APP. BY
1				
2				
3				
4				
5				

gll-112.03-04.dgn
19-MAR-2014

GCP 4000
CALIBRATION HISTORY

INITIAL SET UP BY: _____ DATE: _____

		APPROACH DISTANCE CALIBRATION										LINEARIZATION CALIBRATION	
		EZ/EX VALUES (TRACK UNOCCUPIED)				HARD WIRE SHUNT AT TERMINATION SHUNT				COMPUTED APPROACH DISTANCE		LINEARIZATION STEP VALUE	
		EZ		EX		EZ		EX					
		NRML	STBY	NRML	STBY	NRML	STBY	NRML	STBY	NRML	STBY	NRML	STBY
NORTH	TRACK 1												
SOUTH	TRACK 1	N/A	N/A	N/A	N/A	N/A	N/A	N/A	N/A	N/A	N/A	N/A	N/A
NORTH	TRACK 2												
SOUTH	TRACK 2	N/A	N/A	N/A	N/A	N/A	N/A	N/A	N/A	N/A	N/A	N/A	N/A

GCP 4000
CALIBRATION HISTORY

INITIAL SET UP BY: _____ DATE: _____

		APPROACH DISTANCE CALIBRATION										LINEARIZATION CALIBRATION	
		EZ/EX VALUES (TRACK UNOCCUPIED)				HARD WIRE SHUNT AT TERMINATION SHUNT				COMPUTED APPROACH DISTANCE		LINEARIZATION STEP VALUE	
		EZ		EX		EZ		EX					
		NRML	STBY	NRML	STBY	NRML	STBY	NRML	STBY	NRML	STBY	NRML	STBY
NORTH	TRACK 1												
SOUTH	TRACK 1	N/A	N/A	N/A	N/A	N/A	N/A	N/A	N/A	N/A	N/A	N/A	N/A
NORTH	TRACK 2												
SOUTH	TRACK 2	N/A	N/A	N/A	N/A	N/A	N/A	N/A	N/A	N/A	N/A	N/A	N/A

GCP 4000
CALIBRATION HISTORY

INITIAL SET UP BY: _____ DATE: _____

		APPROACH DISTANCE CALIBRATION										LINEARIZATION CALIBRATION	
		EZ/EX VALUES (TRACK UNOCCUPIED)				HARD WIRE SHUNT AT TERMINATION SHUNT				COMPUTED APPROACH DISTANCE		LINEARIZATION STEP VALUE	
		EZ		EX		EZ		EX					
		NRML	STBY	NRML	STBY	NRML	STBY	NRML	STBY	NRML	STBY	NRML	STBY
NORTH	TRACK 1												
SOUTH	TRACK 1	N/A	N/A	N/A	N/A	N/A	N/A	N/A	N/A	N/A	N/A	N/A	N/A
NORTH	TRACK 2												
SOUTH	TRACK 2	N/A	N/A	N/A	N/A	N/A	N/A	N/A	N/A	N/A	N/A	N/A	N/A

IRC 30 AUG 2013

PROPOSED
DESIGN NO. 13-0003
RED-IN YELLOW-OUT

AS INSTALLED
DATE _____
BY _____
(PRINT NAME)

PROPOSED			REVISIONS	D	C	COMPLETED			C
D	M	Y				D	M	Y	

REGION SOUTHERN
SUB. GILMAN 349

SIGNALS AND COMMUNICATIONS HOMEWOOD
30 AUGUST 2013
DES. NDH
CH. BJW

GCP 4000
CALIBRATION HISTORY
GIBSON CITY, IL
XING REMOTE

GIL-112.03-04

INVENSYS RAIL CORPORATION			
DES.: NDH	DATE: 08/30/13	JOB NO.: JXXD03624	
CKD.: BJW	ISSUE DATE: N/A	EST. NO.: XP-6921	
DRN.: NDH	PLAN NO.: N/A	SHEET 4 OF 9	
P TIME: 07:53	P DATE: 19-MAR-2014	CAD ID.: GIL-112.03-04	

INVENSYS RAIL CORP.
LOUISVILLE DIVISION, LOUISVILLE, KY

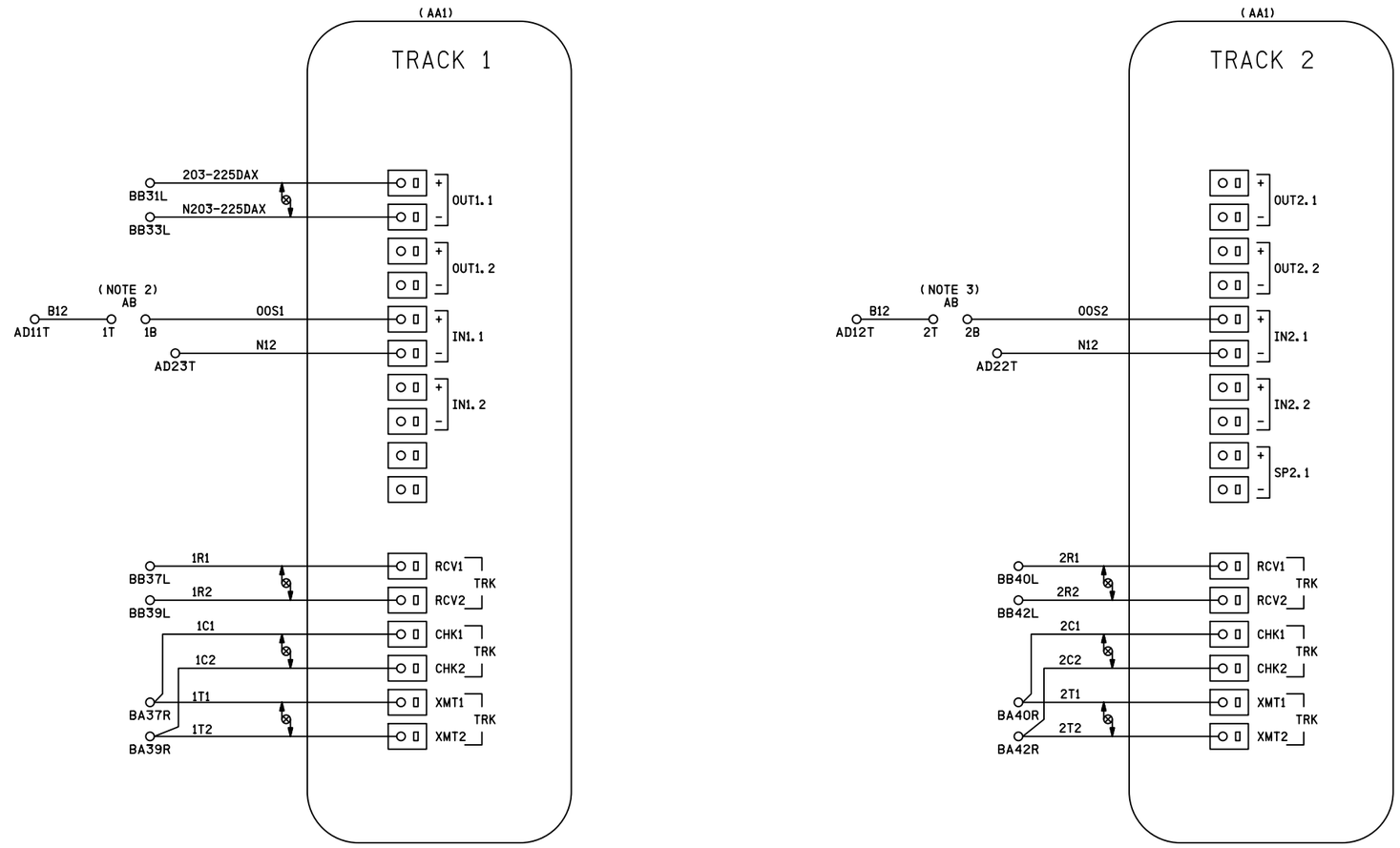

NOTES

1) ALL WIRING #16 AWG UNLESS OTHERWISE NOTED

2) TO TAKE TRACK 1 (T1) OUT OF SERVICE, JUMPER AB1T TO AB1B

3) TO TAKE TRACK 2 (T2) OUT OF SERVICE, JUMPER AB2T TO AB2B

DENOTES TWISTED PAIR

IRC 30 AUG 2013

PROPOSED
DESIGN NO. 13-0003
RED-IN YELLOW-OUT

AS INSTALLED
DATE _____
BY _____
(PRINT NAME)

PROPOSED D	M	Y	REVISIONS	D	C	COMPLETED D	M	Y	C

REGION SOUTHERN
SUB. GILMAN 349

SIGNALS AND COMMUNICATIONS HOMEWOOD
30 AUGUST 2013
DES. NDH
CH. BJW

GCP 4000
TRACK 1 & 2 MODULE CONNECTIONS
GIBSON CITY, IL
XING REMOTE

GIL-112.03-05

gil-112.03-05.dgn
19-MAR-2014

REVISIONS

NO.	DATE	BY	DESCRIPTION	APP. BY
1				
2				
3				
4				
5				

INVENSYS RAIL CORPORATION

DES.: NDH	DATE: 08/30/13	JOB NO.: JXXD03624	
CKD.: BJW	ISSUE DATE: N/A	EST. NO.: XP-6921	
DRN.: NDH	PLAN NO.: N/A	SHEET 5 OF 9	
P TIME: 07:53	P DATE: 19-MAR-2014	CAD ID.: GIL-112.03-05	

INVENSYS RAIL CORP.
LOUISVILLE DIVISION, LOUISVILLE, KY

REVISIONS				
NO.	DATE	BY	DESCRIPTION	APP. BY
1				
2				
3				
4				
5				

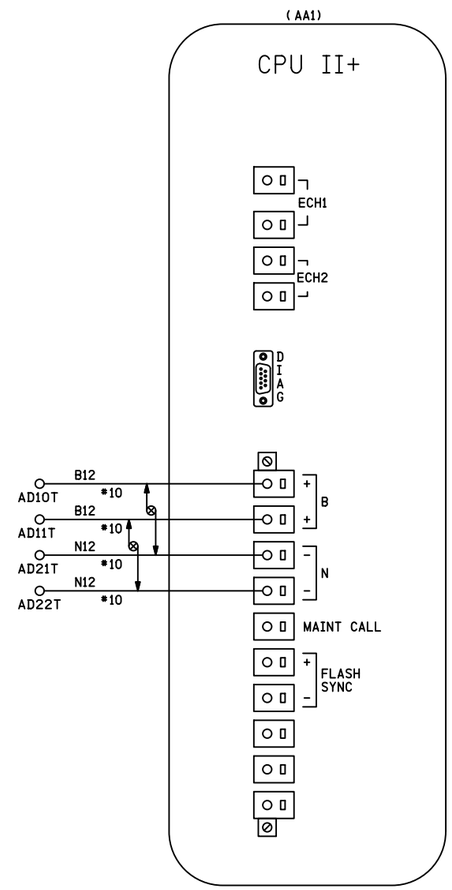

NOTES
1) ALL WIRING #16 AWG UNLESS OTHERWISE NOTED

DENOTES TWISTED PAIR

IRC 30 AUG 2013

PROPOSED
DESIGN NO. 13-0003
RED-IN YELLOW-OUT

AS INSTALLED
DATE _____
BY _____
(PRINT NAME)

PROPOSED			REVISIONS	D	C	COMPLETED			C
D	M	Y				D	M	Y	

REGION SOUTHERN
SUB. GILMAN 349

SIGNALS AND COMMUNICATIONS HOMEWOOD
30 AUGUST 2013
DES. NDH
CH. BJW

GCP 4000
CPUII+
GIBSON CITY, IL
XING REMOTE

GIL-112.03-06

INVENSYS RAIL CORPORATION

DES.: NDH	DATE: 08/30/13	JOB NO.: JXXD03624	
CKD.: BJW	ISSUE DATE: N/A	EST. NO.: XP-6921	
DRN.: NDH	PLAN NO.: N/A	SHEET 6 OF 9	
P TIME: 07:53	P DATE: 19-MAR-2014	CAD ID.: GIL-112.03-06	

INVENSYS RAIL CORP.
LOUISVILLE DIVISION, LOUISVILLE, KY

gil-112.03-06.dgn
19-MAR-2014

REVISIONS				
NO.	DATE	BY	DESCRIPTION	APP. BY
1				
2				
3				
4				
5				

CONTROL BANK

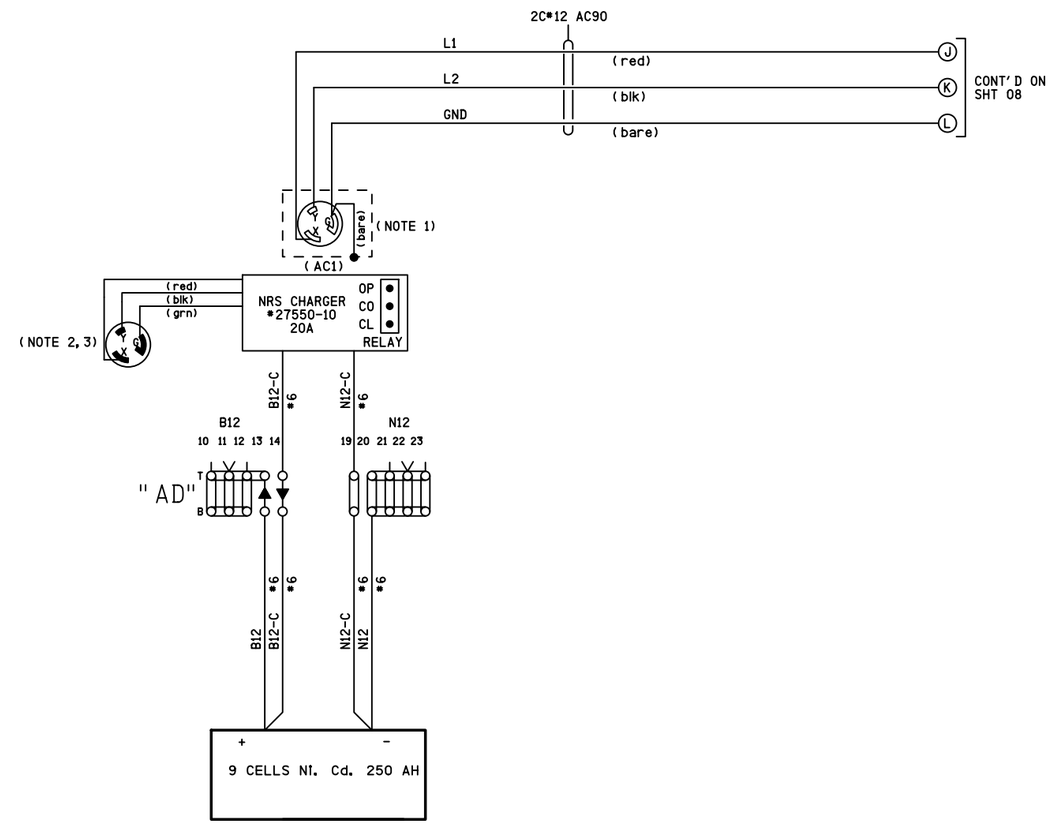

NOTES

1) 20A 250V TEST LOCK
RECEPTACLE HUBBELL HBL 2320

2) PLUG HUBBELL HBL 2321
REFER TO PS-902 PAGE 6

IRC 30 AUG 2013

PROPOSED
DESIGN NO. 13-0003
RED-IN YELLOW-OUT

AS INSTALLED
DATE _____
BY _____
(PRINT NAME)

PROPOSED			REVISIONS	D	C	COMPLETED			C
D	M	Y				D	M	Y	

REGION SOUTHERN
SUB. GILMAN 349

SIGNALS AND COMMUNICATIONS HOMEWOOD
30 AUGUST 2013
DES. NDH
CH. BJW

DC DISTRIBUTION
GIBSON CITY, IL
XING REMOTE
GIL-112.03-07

gil-112.03-07.dgn
19-MAR-2014

INVENSYS RAIL CORPORATION			
DES.: NDH	DATE: 08/30/13	JOB NO.: JXXD03624	
CKD.: BJW	ISSUE DATE: N/A	EST. NO.: XP-6921	
DRN.: NDH	PLAN NO.: N/A	SHEET 7 OF 9	
P TIME: 07:53	P DATE: 19-MAR-2014	CAD ID.: GIL-112.03-07	

INVENSYS RAIL CORP.
LOUISVILLE DIVISION, LOUISVILLE, KY

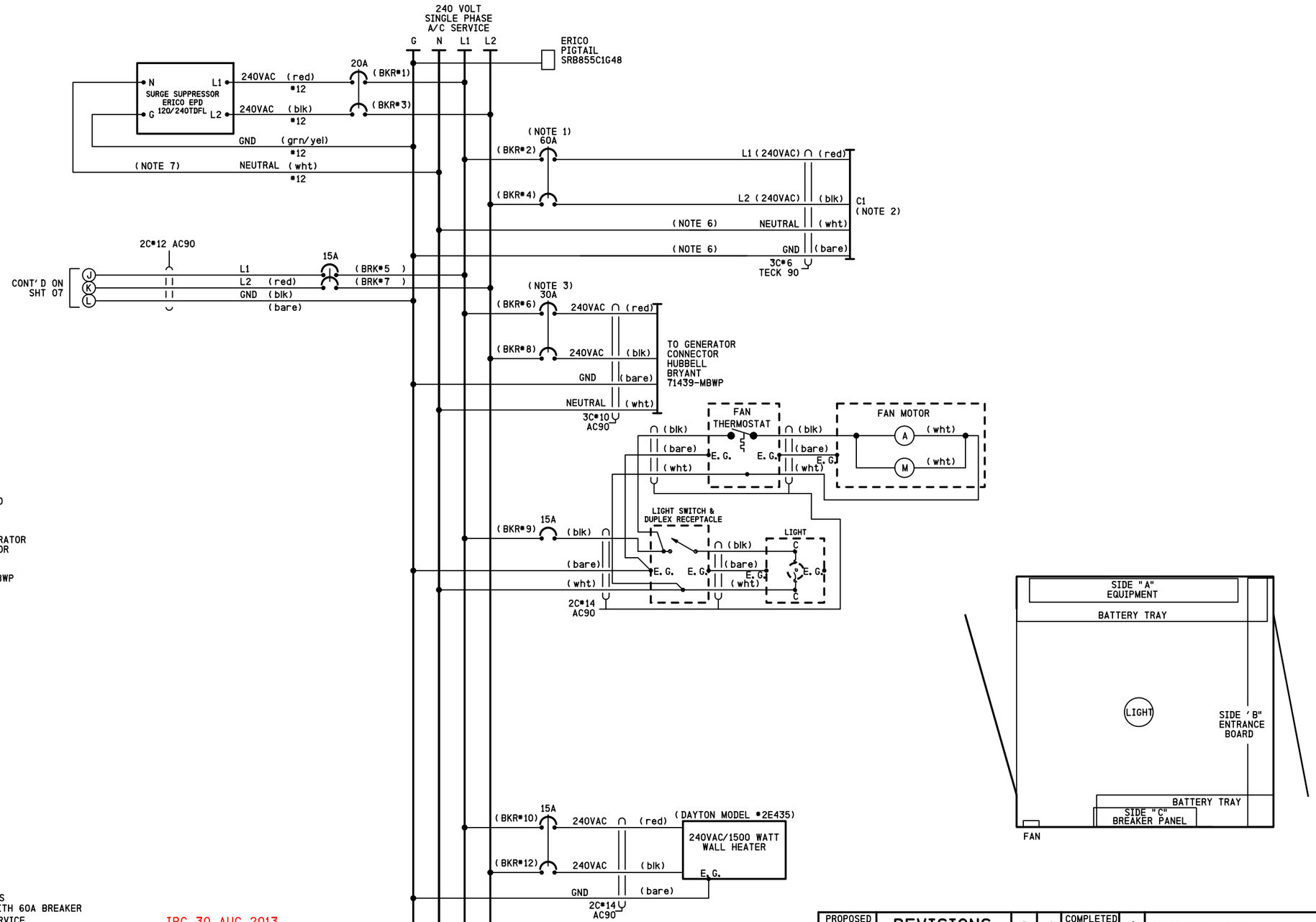

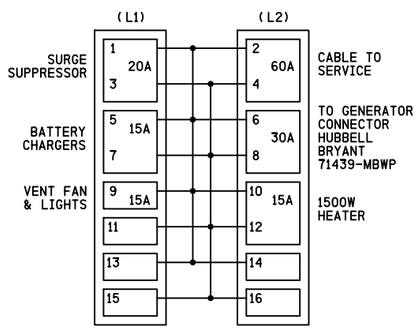

BREAKER POSITIONS

NOTES

1) CIRCUIT BREAKER NOT TO EXCEED 60 AMPERES
   RETAINING KIT PK4DTIM4LA MUST BE USED WITH 60A BREAKER
2) FEEDER CIRCUIT BREAKER, AT STUB POLE SERVICE
   PANEL, NOT TO EXCEED 60 AMPERES
3) 24 VOLT - 40 WATT TRANSFORMER (CN STOCK #02-45-367)
4) A SWITCH TRANSFER KIT MUST BE INSTALLED BETWEEN
   THE SERVICE DISCONNECT BREAKER AND THE GENERATOR HOOK UP
5) WHERE SEPARATE GROUND WIRE EXISTS BETWEEN THE SERVICE AND THE
   LOAD CENTER, REMOVE THE BRASS COLORED BONDING SCREW
   (REFER TO SCHEMATIC ON BOX COVER FOR EXACT LOCATION)
6) S.C.#6 STRANDED, CSA TYPE R90 (X-LINK)
7) KEEP LEADS AS SHORT AS POSSIBLE

IRC 30 AUG 2013

PROPOSED
DESIGN NO. 13-0003
RED-IN YELLOW-OUT

AS INSTALLED
DATE _____
BY _____
(PRINT NAME)

REVISIONS					
NO.	DATE	BY	DESCRIPTION	APP.	BY
1					
2					
3					
4					
5					

INVENSYS RAIL CORPORATION			
DES. : NDH	DATE: 08/30/13	JOB NO. : JXXD03624	
CKD. : BJW	ISSUE DATE: N/A	EST. NO. : XP-6921	
DRN. : NDH	PLAN NO. : N/A	SHEET 8 OF 9	
P TIME: 07:53	P DATE: 19-MAR-2014	CAD ID. : GIL-112.03-08	

PROPOSED			REVISIONS	D	C	COMPLETED			C
D	M	Y				D	M	Y	

REGION SOUTHERN
SUB. GILMAN 349

SIGNALS AND COMMUNICATIONS HOMEWOOD
30 AUGUST 2013
DES. NDH
CH. BJW

AC DISTRIBUTION
GIBSON CITY, IL
XING REMOTE
GIL-112.03-08

gil-112.03-08.dgn
19-MAR-2014

INVENSYS RAIL CORP.
LOUISVILLE DIVISION, LOUISVILLE, KY

REVISIONS				
NO.	DATE	BY	DESCRIPTION	APP. BY
1				
2				
3				
4				
5				

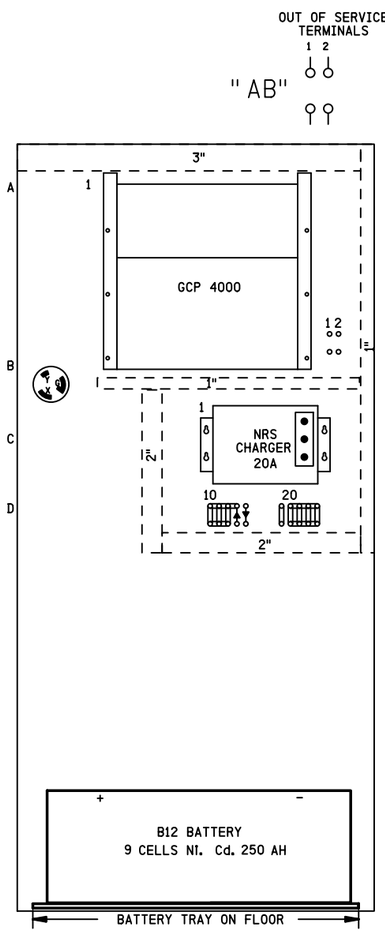

SIDE "A"

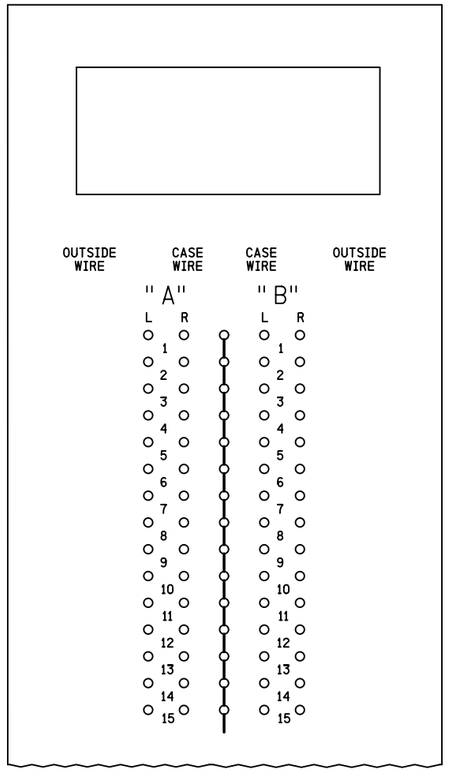

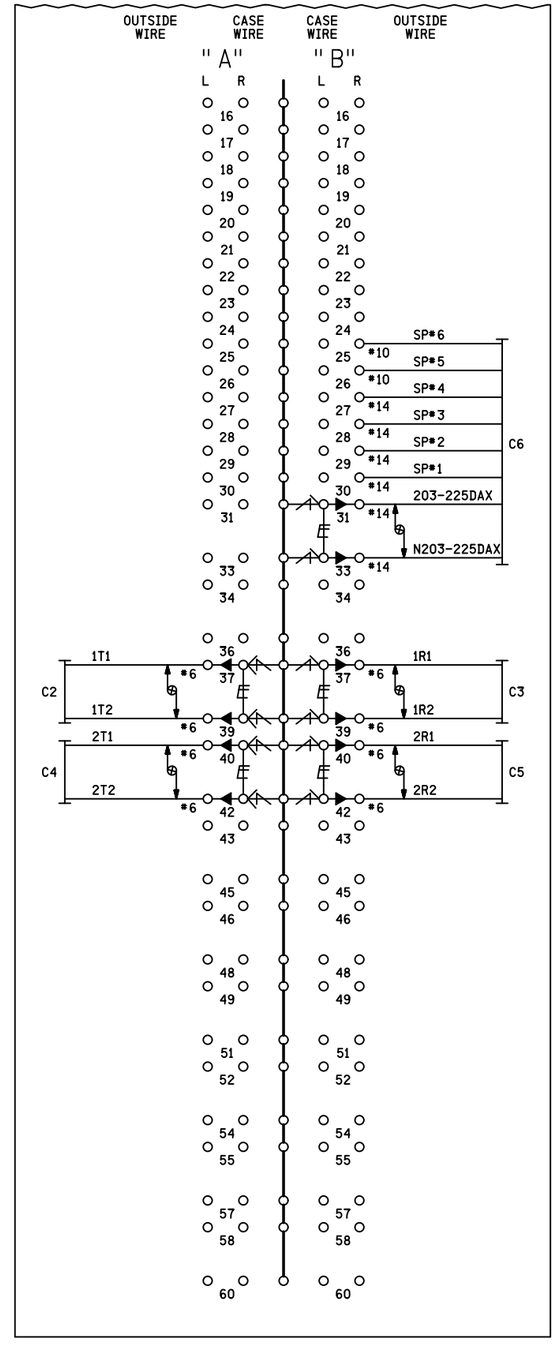

SIDE "B"

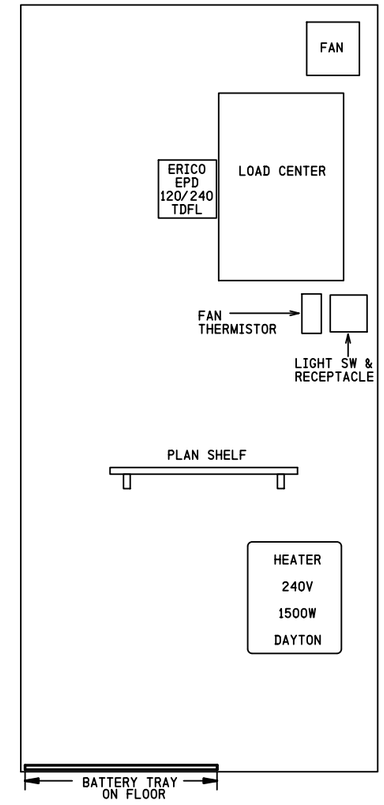

SIDE "C"

NOTES

- DENOTES HD EQUALIZER CN# 02-32-391 SAFETRAN # 022700-1X
- DENOTES LOW VOLTAGE ARRESTOR CN# ERICO # ETSP23050
- DENOTES GROUND PLANE
- DENOTES TWISTED PAIR

IRC 30 AUG 2013

PROPOSED
DESIGN NO. 13-0003
RED-IN YELLOW-OUT

AS INSTALLED
DATE _____
BY _____
(PRINT NAME)

PROPOSED			REVISIONS	D	C	COMPLETED			C
D	M	Y				D	M	Y	

REGION SOUTHERN
SUB. GILMAN 349

SIGNALS AND COMMUNICATIONS HOMEWOOD
30 AUGUST 2013
DES. NDH
CH. BJW

BUNGALOW LAYOUT SIDE
A, B, C & L.I.G.P.
GIBSON CITY, IL

XING REMOTE

GIL-112.03-09

9

INVENSYS RAIL CORPORATION

DES.: NDH	DATE: 08/30/13	JOB NO.: JXXD03624	
CKD.: BJW	ISSUE DATE: N/A	EST. NO.: XP-6921	
DRN.: NDH	PLAN NO.: N/A	SHEET 9 OF 9	
P TIME: 07:53	P DATE: 19-MAR-2014	CAD ID.: GIL-112.03-09	

INVENSYS RAIL CORP.
LOUISVILLE DIVISION, LOUISVILLE, KY

gil-112.03-09.dgn
19-MAR-2014