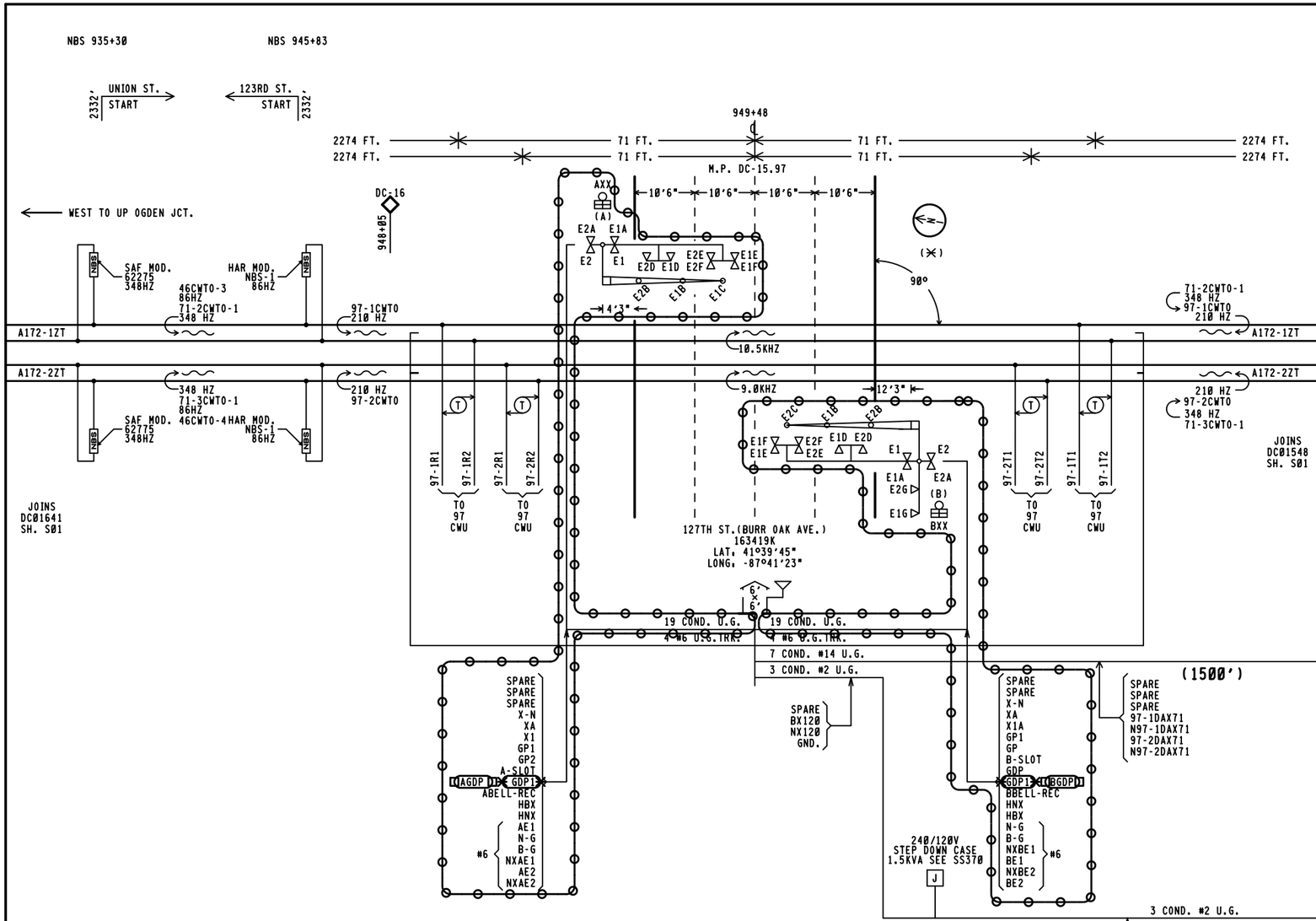

APPROACH LENGTHS TABLE DC, AFO, TYPE C, MOTION, CWT, OR OTHER	WESTWARD TRACK 1 CWT	EASTWARD TRACK 1 CWT	WESTWARD TRACK 2 CWT	EASTWARD TRACK 2 CWT
STANDARD MINIMUM WARNING TIME IN SECONDS	25	25	25	25
ROADWAY GATE TIME IN SECONDS	5	5	5	5
CLEARANCE TIME IN SECONDS	1	1	1	1
DOT TRAFFIC LIGHT SIMULTANEOUS PREEMPT TIME IN SECONDS ✳	0	0	0	0
DESIGNED WARNING TIME FOR TRAINS AT TIME TABLE SPEED	31 SEC.	31 SEC.	31 SEC.	31 SEC.
DOT TRAFFIC LIGHT ADVANCE PREEMPT TIME IN SECONDS ✳	0	0	0	0
CONTROL EQUIPMENT DECISION TIME IN SECONDS	4	4	4	4
DESIGNED DETECTION TIME FOR TRAINS AT TIME TABLE SPEED	35 SEC.	35 SEC.	35 SEC.	35 SEC.
TIME TABLE MAXIMUM TRAIN SPEED IN MILES PER HOUR	40	40	40	40
BUFFER SPEED IN MILES PER HOUR	5	5	5	5
TOTAL WARNING SYSTEM DESIGN SPEED IN MILES PER HOUR	45	45	45	45
APPROACH DISTANCE TO ISLAND EDGE IN FEET	2274	2274	2274	2274
HALF WIDTH OF ISLAND IN FEET	71	71	71	71
APPROXIMATE MILE POSTS FOR APPROACH CIRCUIT	16.41	15.53	16.41	15.53

✳AUTHORIZING AGENCY. NONE
✳DATE OF REQUIREMENT. NONE
✳AMOUNT OF TIME (SEC.). NONE

FIELD NOTE. ALL FREQUENCIES, DAX CABLE, POWER CABLE, & TRANSFORMER INSTALLED UNDER IL2006019.

FIELD NOTE. APPROACH ADJUSTMENT AND INSTALLATION OF REMOTE MONITORING TO BE COMPLETED UNDER IL2012035.

NOTES.

1. 12" LED MAXIMUM CURRENT 1.0A
   LED GATE ARM LIGHTS .3A MAXIMUM
2. GATE LENGTH (A) 24' (B) 33'
   CANTILEVER LENGTH (A) 20' (B) 28'
3. (✳) = LOCATION OF HOUSE
4. (N) = APPROXIMATE COMPASS NORTH.
5. TRANSMITTER LEADS FOR MOTION OR PREDICTOR EQUIPMENT SHOULD BE CONNECTED ON THE BUNGALOW OR SHORT LEAD SIDE OF THE CROSSING.
6. ISLAND TRACK LEADS SHOULD BE CONNECTED 50 FEET FROM ROAD EDGE BUT ON NARROW ROADS (20' OR LESS) ISLAND LENGTH SHALL BE 120 FEET.
7. WARNING SYSTEM APPROACH CIRCUIT DISTANCES ARE TO BE MEASURED FROM THE ISLAND TRACK CONNECTIONS.

REVISIONS

07-09-2001 SWE	IL1999040/IL2000030/IL2000031
05-27-03 SWE	IL2002022
10-13-04 SWE	IL2003032

THIS PLAN DOES ☐ DOES NOT ☒
SUPERSEDE PLAN DATED 12-10-12
CSX PROJECT # IL2012035A

SII #: JXXD04086
CSX #: IL2012035B
DATE: 02-18-14
INITIALS: SII/JCW/SWS

SIEMENS

= IN
= OUT

NEW SHEET

invensys Rail

PROJ #. IL2012035A
DES BY. P. LAHEY
CHK BY. D. ALBRIGHT
DATE. 05-23-13

= IN
= OUT
= NOTE

CSX TRANSPORTATION
RAIL TRANSPORT GROUP ENGINEERING
COMMUNICATIONS AND SIGNALS

127TH ST. (BURR OAK AVE.) 163419K

TRACK AND SIGNAL PLAN AT
BLUE ISLAND, IL M.P. DC-15.97

DESIGNED	DIGITIZED	CHECKED	DATE
IRC/SWS	IRC/SWS	IRC/DBA	12-10-12
NEXT FILE	NEXT SH	FILE	SHEET
DC01597	E01	DC01597	S01 (B)

	1ISLR		2ISLR		97CWR		XR		XPR		GPR			EOR		POR	
	12	B8	12	B8	12	B8	12 FB	B8	22 F	B36	12 B	B82		12 FB	B81	12 FB	B62
	15	C30	15	C30	15	C30	15 FB	C30	25 F	C30	15 B	C30		15 FB	C30	15 FB	C30
	22		22		22		22				22			32 FB		22 FB	
	23 F		23 F		23 F		23				25			35 FB		25 FB	
	25		25		25 ~~F~~		25 F				32 B					32 F	
	32		32		32		32				35 F					35	
	35		35		35		35										

97CWU
MODULES REQUIRED

2EA.	80011 4.0KHZ HIGH FREQ. ISL. MOD.
2EA.	80011 4.9KHZ HIGH FREQ. ISL. MOD.
4EA.	80012 TRANSCEIVER MOD.
2EA.	80013 RELAY DRIVE
2EA.	80214 PROCESSOR MOD.
2EA.	80020 CONTROL INTERFACE
1EA.	80028 KEY BOARD PAD

EQUIPMENT

REF.	NOMENCLATURE	TYPE
	97CWU	MOTION SENSOR/GCP SAFETRAN 3000D2, P/N 80100-102 FREQ. 210 HZ ISLAND FREQ. 10.5 KHZ AND 9.0 KHZ
~~X~~	~~X~~ RECORDER ~~X~~	~~X~~ SMART EVENT RECORDER, DMER2-16X ~~X~~

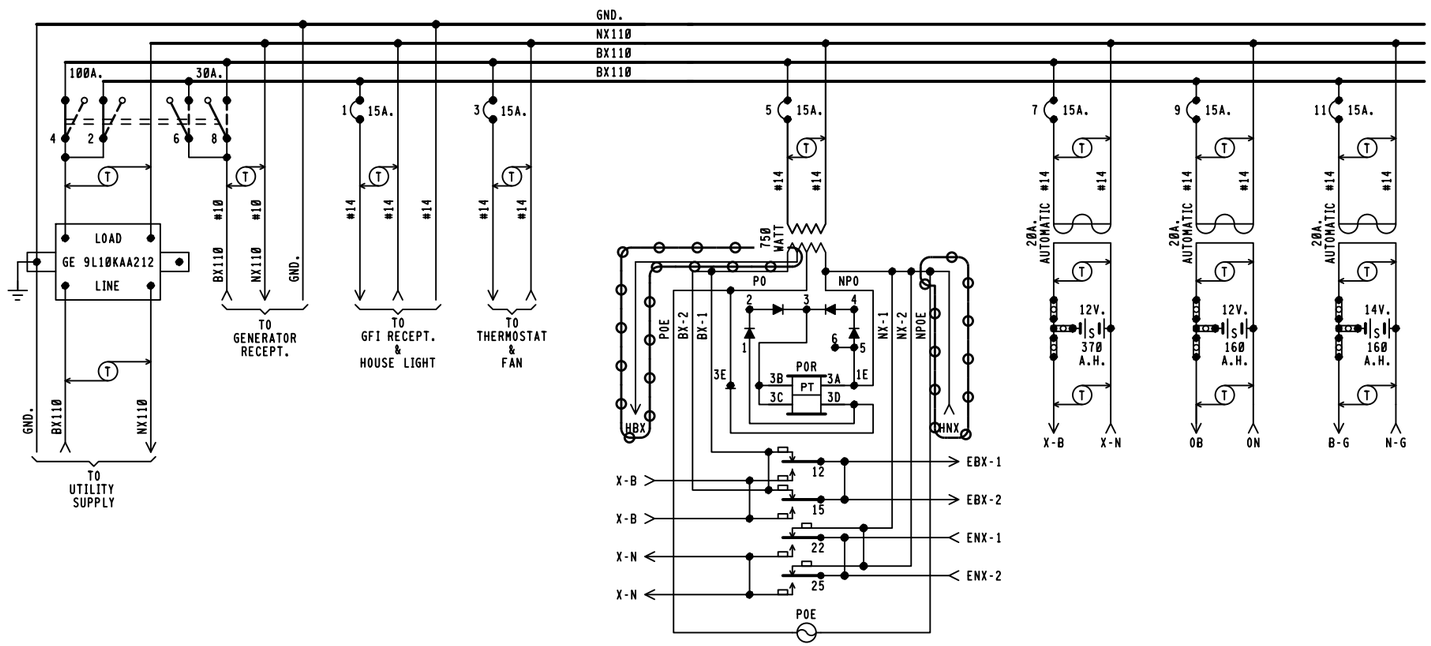

SII #: JXXD04086
CSX #: IL2012035B
DATE: 02-18-14
INITIALS: SII/JCW/SWS

SIEMENS

~~OOO~~ = IN
~~XXX~~ = OUT

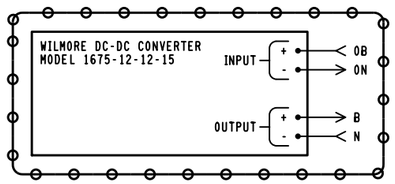

NOTES.

1 - REFERENCES ARE PER SCMS-13.
2 - ARRESTERS ARE PER SS382.
3 - SHELF RELAY PLACEMENT ON CONSIST CHART HAS NO SIGNIFICANCE.
4 - PLUG-IN RELAYS ARE VIEWED FROM THE FRONT OF RACK.
5 - BATTERY A.H. CAPACITY SHOWN IS THE MINIMUM REQUIREMENT.
6 - WIRING
  A - FEED TO ALL BUSSES, LIGHT CIRCUITS,MOTOR CIRCUITS TO BE #10 FLEX.
  B - 110-VOLT FEED FROM ENTRANCE TO POWER BUSS TO BE #10 FLEX.
  C - ALL TRACK WIRES TO BE #10 FLEX.
  D - ALL OTHERS TO BE #16 FLEX UNLESS NOTED.
  E - BATTERY OUTPUTS TO BE #6 TWISTED PAIR PER SS360.
  F - GROUND WIRE NOT NECESSARY WHEN GE ARRESTER IS MOUNTED ON GROUND PLANE OR METAL ENCLOSURE AFFIXED DIRECTLY TO BUNGALOW METALLIC STRUCTURAL MEMBER.
7 - CIRCUIT INTERRUPTERS 2 & 4 ARE MECHANICALLY INTERLOCKED WITH CIRCUIT INTERRUPTERS 6 & 8.

6'X 6' RELAY HOUSE

REVISIONS	
07-09-2001 SWE	IL2000030
05-27-03 SWE	IL2002032
10-13-04 SWE	IL2003032

CSX TRANSPORTATION
RAIL TRANSPORT GROUP ENGINEERING
COMMUNICATIONS AND SIGNALS

BLUE ISLAND JCT. TO ROCKWELL ST.
BLUE ISLAND, IL
EQUIPMENT AT
BURR OAK AVE. (127TH ST.), 163 419K, MP. DC-15.97

DESIGNED	DIGITIZED	CHECKED	DATE
SWE	SWE	SWE	03-25-99
NEXT FILE	NEXT SH	FILE	SHEET
DC01597	C01	DC01597	E01

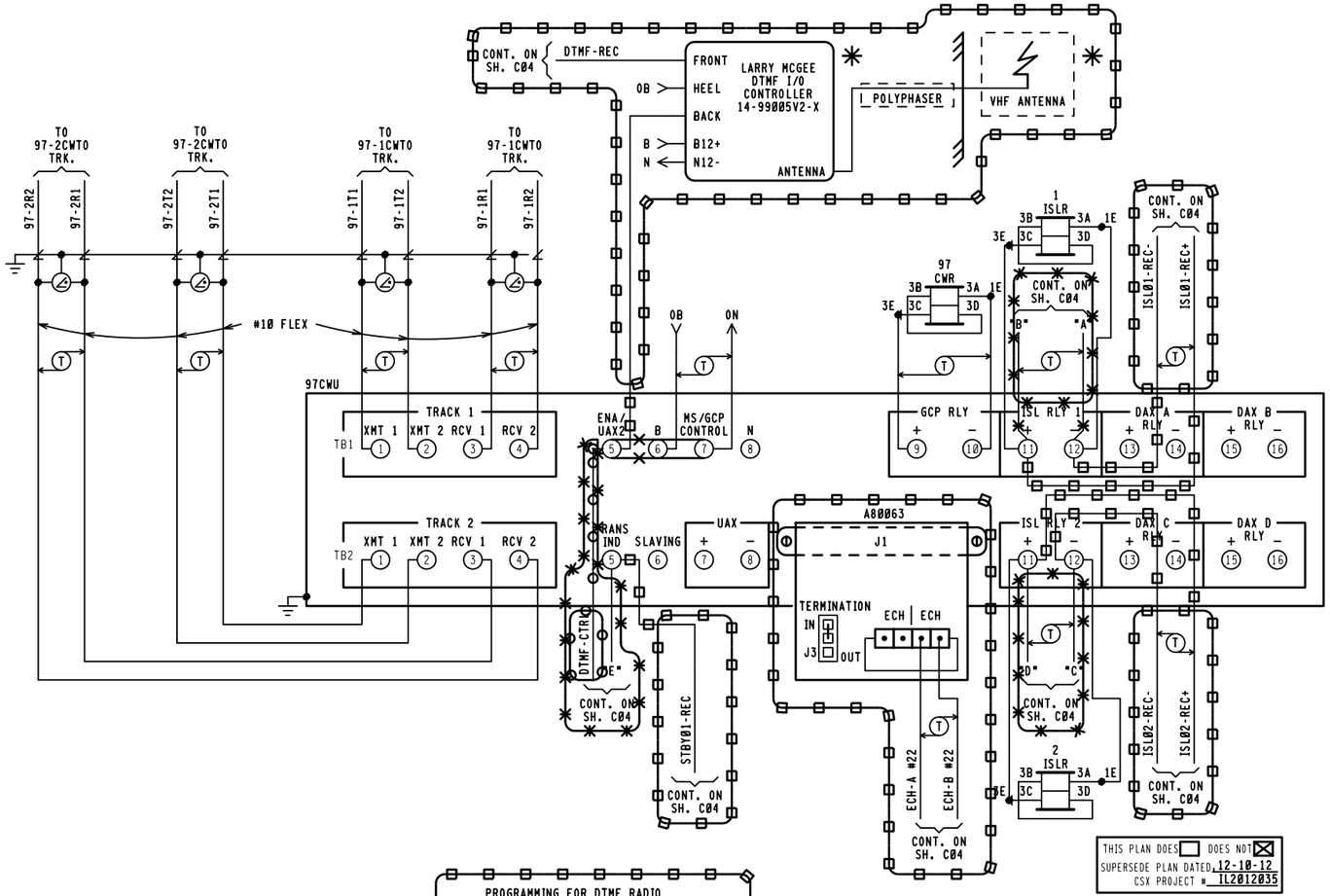

THIS PLAN DOES ☐ DOES NOT ☒
SUPERSEDE PLAN DATED 12-10-12
CSX PROJECT # IL2012035

SII #: JXXD04086
CSX #: IL2012035B
DATE: 02-18-14
INITIALS: SII/JCW/SWS

SIEMENS

= IN
= OUT
✳ = REUSE EXISTING

invensys Rail

PROJ #. IL2012035
DES BY. S. SPENCE
CHK BY. D. ALBRIGHT
DATE. 12-10-12

= IN
= OUT

PROGRAMMING FOR DTMF RADIO

REMOTE DTMF CROSSING ACTIVATION
(ACTIVATES ENTIRE CROSSING)

TO ACTIVATE PRESS. 419#
TO DE-ACTIVATE PRESS. 419*
(ACTIVATION WILL TIME OUT AFTER 60 SEC.)

MODULE A80063
NETWORK INTERFACE CONNECTOR

(J1)	(J3 JUMPER)	
ECH1	IN	TERMINATION
ECH2	OUT	ADD NODES

MODULE 89728
S4 DIP SWITCH POSITIONS ✳

SWITCH #	16	8	4	2	1
SWITCH POSTION	UP	DOWN	UP	DOWN	UP

✳ MAY BE SET PER FIELD CONDITIONS

MODULE 89728
S1 DIP SWITCH POSITIONS

SWITCH #	A	B	C	D
DAX USED	RIGHT	RIGHT	RIGHT	RIGHT

LEFT INDICATES DAX USED

REVISIONS	
07-09-2001 SWE	IL2000030
05-27-03 SWE	IL2002032
10-13-04 SWE	IL2003032

CSX TRANSPORTATION
RAIL TRANSPORT GROUP ENGINEERING
COMMUNICATIONS AND SIGNALS

BLUE ISLAND JCT. TO ROCKWELL ST.
BLUE ISLAND, IL
TRACK AND SIGNAL PLAN AT
BURR OAK AVE. (127TH ST.), 163 419K, MP. DC-15.97

DESIGNED	DIGITIZED	CHECKED	DATE
SWE	SWE	SWE	03-25-99

NEXT FILE	NEXT SH	FILE	SHEET
DC01597	C02	DC01597	C01

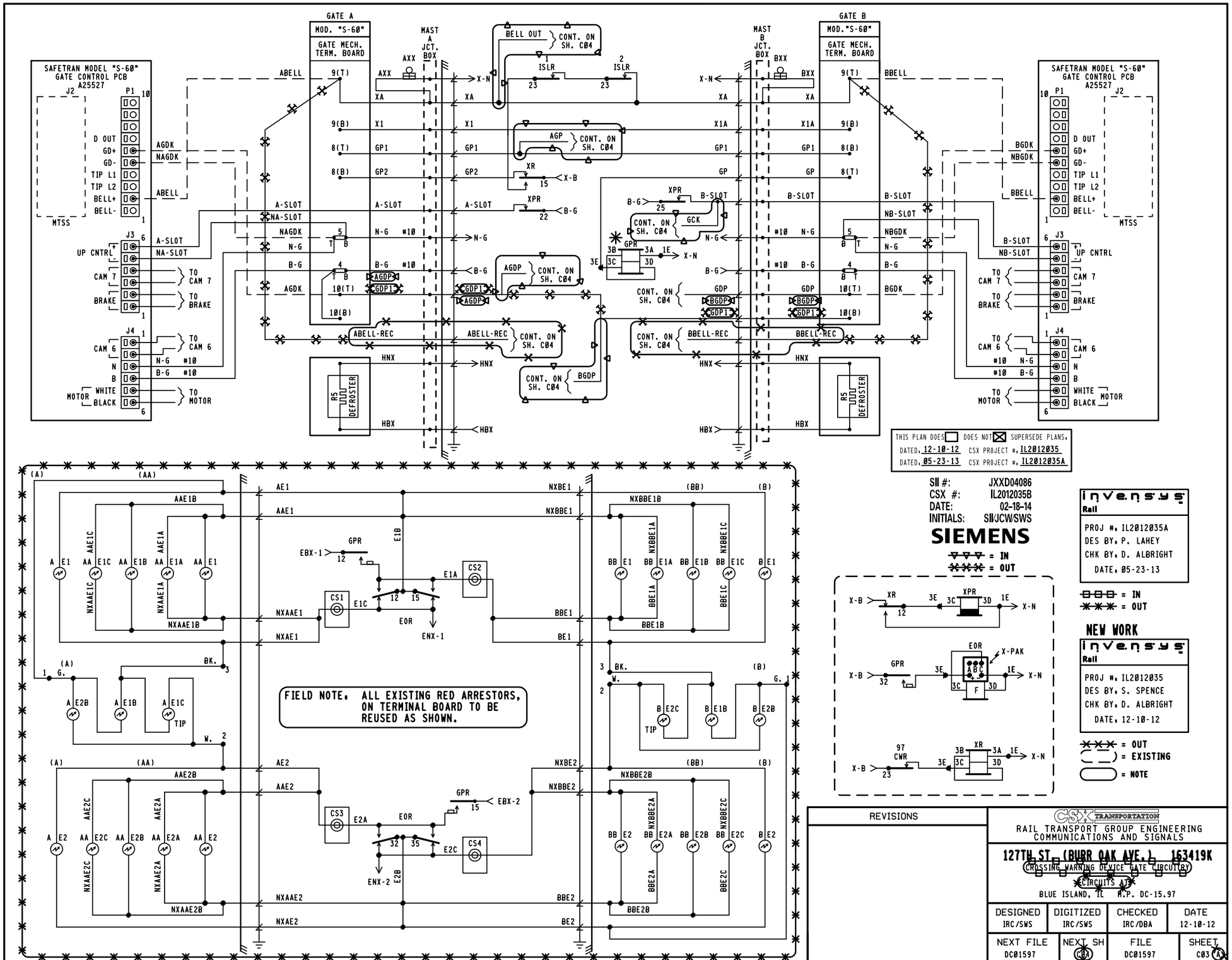

GATE A
MOD. "S-60"
GATE MECH. TERM. BOARD
GATE B
MOD. "S-60"
GATE MECH. TERM. BOARD
MAST A JCT. BOX
MAST B JCT. BOX
SAFETRAN MODEL "S-60" GATE CONTROL PCB A25527
MTSS
BELL OUT
CONT. ON SH. C04
AGP
AGDP
GDP1
BGDP
GCK
GPR
XPR
XR
ISLR
ABELL-REC
BBELL-REC
R5 DEFROSTER
UP CNTRL
CAM 7
BRAKE
CAM 6
MOTOR
WHITE
BLACK
TO CAM 7
TO BRAKE
TO CAM 6
TO MOTOR
D OUT
GD+
GD-
TIP L1
TIP L2
BELL+
BELL-
AGDK
NAGDK
ABELL
A-SLOT
NA-SLOT
N-G
B-G
BGDK
NBGDK
BBELL
B-SLOT
NB-SLOT
NBGDK
HNX
HBX
AXX
BXX
X-N
XA
X1
X1A
GP1
GP2
GP
X-B
B-G
#10
10(T)
10(B)
9(T)
9(B)
8(T)
8(B)
9(B)
8(B)
8(T)
BBELL
BGDK
NBGDK
THIS PLAN DOES ☐ DOES NOT ☒ SUPERSEDE PLANS.
DATED, 12-10-12 CSX PROJECT #, IL2012035
DATED, 05-23-13 CSX PROJECT #, IL2012035A
SII #: JXXD04086
CSX #: IL2012035B
DATE: 02-18-14
INITIALS: SII/JCW/SWS
SIEMENS
= IN
= OUT
invensys Rail
PROJ #, IL2012035A
DES BY, P. LAHEY
CHK BY, D. ALBRIGHT
DATE, 05-23-13
= IN
= OUT
NEW WORK
invensys Rail
PROJ #, IL2012035
DES BY, S. SPENCE
CHK BY, D. ALBRIGHT
DATE, 12-10-12
= OUT
= EXISTING
= NOTE
FIELD NOTE. ALL EXISTING RED ARRESTORS, ON TERMINAL BOARD TO BE REUSED AS SHOWN.
CS1
CS2
CS3
CS4
EBX-1
EBX-2
ENX-1
ENX-2
EOR
X-PAK
CWR
REVISIONS
CSX TRANSPORTATION
RAIL TRANSPORT GROUP ENGINEERING COMMUNICATIONS AND SIGNALS
127TH ST. (BURR OAK AVE.) 163419K
CROSSING WARNING DEVICE GATE CIRCUITRY
CIRCUITS AT
BLUE ISLAND, IL M.P. DC-15.97
DESIGNED IRC/SWS
DIGITIZED IRC/SWS
CHECKED IRC/DBA
DATE 12-10-12
NEXT FILE DC01597
NEXT SH C04 C03A
FILE DC01597
SHEET C03 A

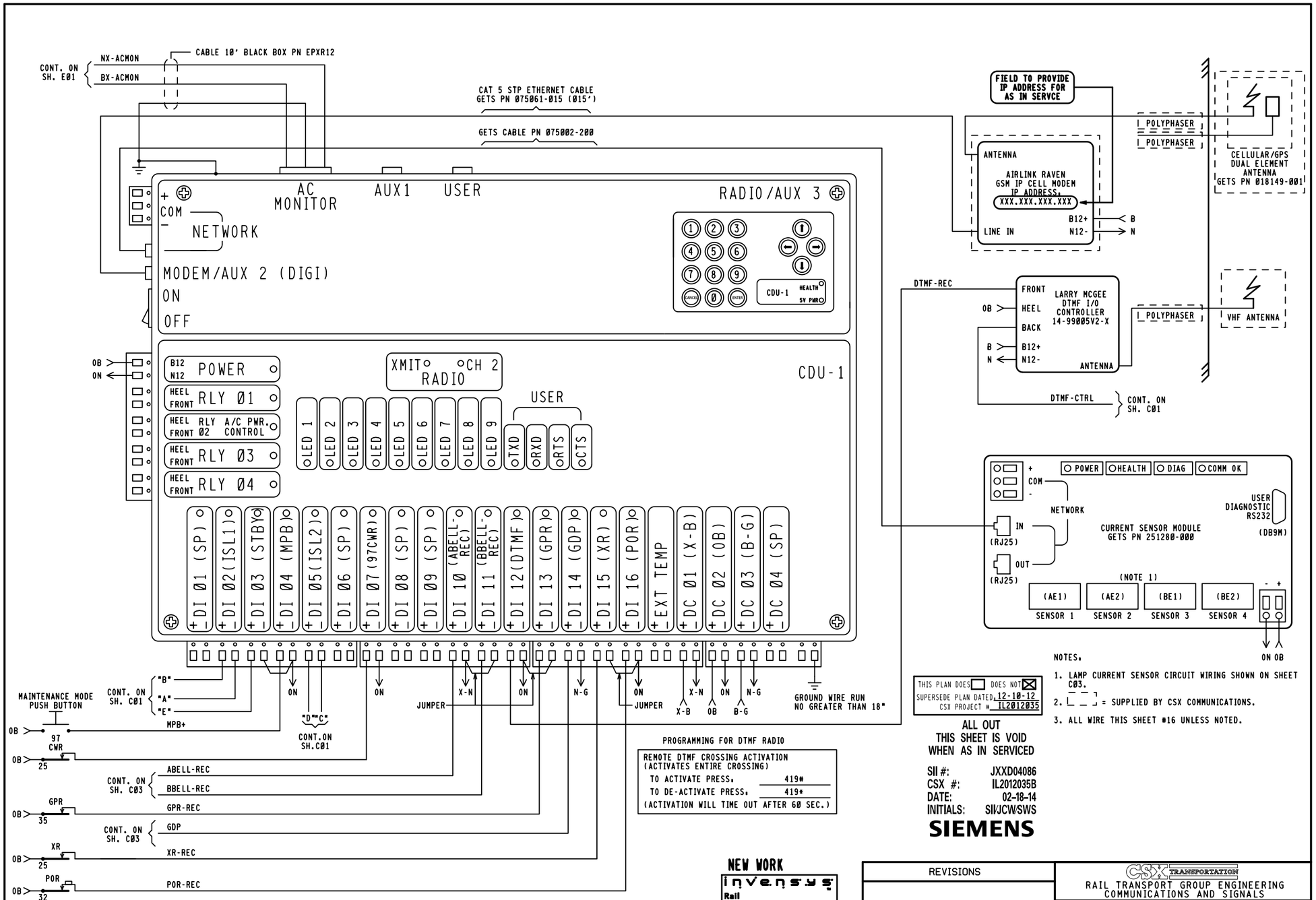

NOTES.

1. LAMP CURRENT SENSOR CIRCUIT WIRING SHOWN ON SHEET C03.
2. [ ] = SUPPLIED BY CSX COMMUNICATIONS.
3. ALL WIRE THIS SHEET #16 UNLESS NOTED.

THIS PLAN DOES ☐ DOES NOT ☒
SUPERSEDE PLAN DATED 12-10-12
CSX PROJECT # IL2012035

ALL OUT
THIS SHEET IS VOID
WHEN AS IN SERVICED

SII #: JXXD04086
CSX #: IL2012035B
DATE: 02-18-14
INITIALS: SII/JCW/SWS

SIEMENS

PROGRAMMING FOR DTMF RADIO

REMOTE DTMF CROSSING ACTIVATION
(ACTIVATES ENTIRE CROSSING)
TO ACTIVATE PRESS. 419#
TO DE-ACTIVATE PRESS. 419*
(ACTIVATION WILL TIME OUT AFTER 60 SEC.)

NEW WORK

invensys Rail

PROJ #. IL2012035
DES BY. S. SPENCE
CHK BY. D. ALBRIGHT
DATE. 12-10-12

XXX = OUT
( ) = NOTE

REVISIONS

CSX TRANSPORTATION
RAIL TRANSPORT GROUP ENGINEERING
COMMUNICATIONS AND SIGNALS

127TH ST. (BURR OAK AVE.) 163419K

RECORDER CIRCUITS AT
BLUE ISLAND, IL M.P. DC-15.97

DESIGNED	DIGITIZED	CHECKED	DATE
IRC/SWS	IRC/SWS	IRC/DBA	12-10-12

NEXT FILE	NEXT SH	FILE	SHEET
DC01597	C05	DC01597	C04 A

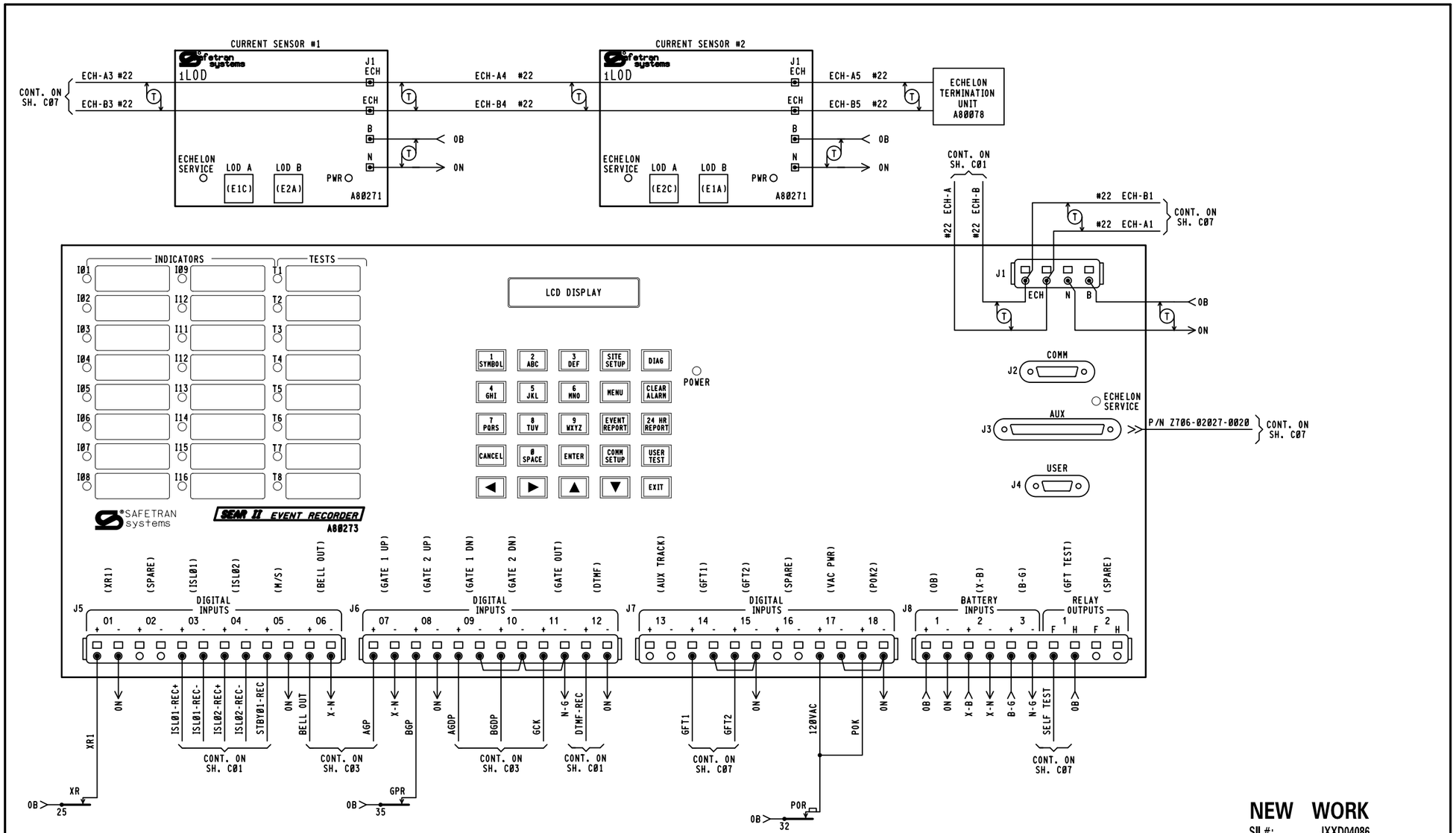

NEW WORK

SII #: JXXD04086
CSX #: IL2012035B
DATE: 02-18-14
INITIALS: SII/JCW/SWS

SIEMENS

XXX = OUT

REVISIONS	CSX TRANSPORTATION RAIL TRANSPORT GROUP ENGINEERING COMMUNICATIONS AND SIGNALS			
	127TH ST. (BURR OAK AVE.) 163419K			
	SEAR II CIRCUITS BLUE ISLAND, IL M.P. DC-15.97			
	DESIGNED SII/JCW	DIGITIZED SII/JCW	CHECKED SII/SWS	DATE 2-18-14
3000ND2WSR.C05 REV. 07-03-13	NEXT FILE DC01597	NEXT SH C05	FILE DC01597	SHEET C04 (B)

	DEFAULTS AND/OR STYLE	FIELD RECORD
EVENT ANALYZER EXECUTIVE PROGRAM	VERSION 2.7, COMPILED ON NOV. 11, 2003	VERSION ____, COMPILED ON _____ (FIELD TO ENTER)
CSXT USER PROGRAM (IF LOADED)	VERSION 1.01, COMPILED ON 12-01-03 (MM-DD-YY)	VERSION , COMPILED ON _____ (FIELD TO ENTER)
SYSTEM SETTINGS		
DATE & TIME (ENABLE DAYLIGHT SAVINGS TIME = Y (YES)	MM-DD-YY 23:01:59	n/a
MILE POST	XYZ-789.01	DC-15.97
SITE NAME	MAIN ST (SR-17,US-1)	BURR OAK AVE.
DOT NUMBER	123456A	163419K

NOTE TO INSPECTOR: AT IN SERVICE OF EVENT ANALYZER OR UPDATE OF ITS INTERNAL EXECUTIVE PROGRAM OR ITS CSXT USER PROGRAM, THE VERSION NUMBER AND COMPILE DATES OF EACH PROGRAM MUST BE INSERTED IN THE BLANK FIELDS.

EVENT ANALYZER ETHERNET PORT SETUP	
	IP ADDRESS
ETHERNET DIAGNOSTIC PORT (TOP)	192.168.13.2
ETHERNET REMOTE PORT (BOTTOM)	192.168.13.1

BATTERY INPUTS	DC 01	DC 02	DC 03	DC 04
CHANNEL	1	2	3	4
BATTERY CHANNEL NAMES	X-B BULB BATTERY	OB ELECTRONIC BATTERY	B-G GATE BATTERY	SPARE
BATTERY CHANNEL I.D.	X-B	OB	B-G	SP
SAMPLE PERIOD	500 ms	500 ms	500 ms	10,000 ms
RESOLUTION	00.2 V	00.2 V	01.0 V	02.0 V

MODULE-DIGITAL 4 QUAD CURRENT SENSOR SERIAL NUMBER: [_____] (BLANK UNTIL AIS RECEIVED)				
RESOLUTION (AMPS RMS) : [00.2] ARMS				
AUTOMATICALLY ALLOCATED DIGITAL INPUT	DI 17	DI 18	D1 19	D1 20
DIGITAL 4 QUAD CURRENT SENSOR	1	2	3	4
NAME	E1C	E2A	E1A	E2C
ID	E1C	E2A	E1A	E2C
LIT BULB COUNT ON EACH CIRCUIT	7	7	7	7
CURRENT READING IN AMPS AT APPROXIMATE 10.0 VOLTS BULB VOLTAGE	5.6	5.6	5.6	5.6

DIGITAL INPUTS	DI 01	DI 02	DI 03	DI 04	DI 05
CHANNEL	1	2	3	4	5
NAME		ISLAND TRACK 1	STANDBY	MAINTENANCE PB	ISLAND TRACK 2
ID	SP	ISL	STBY	MPB	ISL
ON NAME		ISL 1 UP	STANDBY UNIT	MAINTENANCE PB HI	ISL 2 UP
OFF NAME		ISL 1 DN	PRIMARY UNIT	MAINTENANCE PB LOW	ISL 1 DN
ON DEBOUNCE TIME	1000 ms	100 ms	100 ms	100 ms	100 ms
OFF DEBOUNCE TIME	1000 ms	100 ms	100 ms	100 ms	100 ms
TOGGLE PERIOD	500 ms	500 ms	500 ms	500 ms	500 ms

CHANNEL	1	2	3	4
NAME	RELAY OUTPUT 01	RELAY OUTPUT 02	RELAY OUTPUT 03	RELAY OUTPUT 04
I.D.	RLY01	RLY02	RLY03	RLY04
ON NAME	ON	ON	ON	ON
OFF NAME	OFF	OFF	OFF	OFF
PULSE DURATION	1000 ms	1000 ms	1000 ms	1000 ms

DIGITAL INPUTS	DI 06	DI 07	DI 08	DI 09	DI 10
CHANNEL	6	7	8	9	10
NAME		97CWR			ABELL REC
ID	SP	97CWR	SP	SP	ABELL-REC
ON NAME		97CWR UP			BELL RINGING
OFF NAME		97CWR DN			BELL NOT RINGING
ON DEBOUNCE TIME	1000 ms	100 ms	1000 ms	1000 ms	100 ms
OFF DEBOUNCE TIME	1000 ms	100 ms	1000 ms	1000 ms	100 ms
TOGGLE PERIOD	500 ms	500 ms	500 ms	500 ms	500 ms

PORT	USER	AUX 1	MODEM/AUX 2
BAUD RATE	38400	9600	9600
PARITY	N	N	N
DATA BITS	8	8	8
STOP BITS	1	1	1
FLOW CONTROL	NONE	NONE	NONE

DIGITAL INPUTS	DI 11	DI 12	DI 13	DI 14	DI 15	DI 16
CHANNEL	11	12	13	14	15	16
NAME	BBELL REC	DTMF/TEST	GATE VERTICAL	GATE HORIZONTAL	XR	AC POWER OFF
ID	BBELL-REC	DTMF	GPR	GDP	XR	POR
ON NAME	BELL RINGING	DTMF TEST ON	GATE VERTICAL	GATE HORIZONTAL	XR UP	AC POWER ON
OFF NAME	BELL NOT RINGING	DTMF TEST OFF	GATE NOT VERTICAL	GATE NOT HORIZONTAL	XR DN	AC POWER OFF
ON DEBOUNCE TIME	100 ms	100 ms	100 ms	100 ms	100 ms	100 ms
OFF DEBOUNCE TIME	100 ms	100 ms	100 ms	100 ms	100 ms	100 ms
TOGGLE PERIOD	500 ms	500 ms	500 ms	500 ms	500 ms	500 ms

THIS PLAN DOES ☐ DOES NOT ☒
SUPERSEDE PLAN DATED 12-10-12
CSX PROJECT # IL2012035

ALL OUT
THIS SHEET IS VOID
WHEN AS IN SERVICED

SII #: JXXD04086
CSX #: IL2012035B
DATE: 02-18-14
INITIALS: SII/JCW/SWS

SIEMENS

NEW WORK

invensys Rail

PROJ #: IL2012035
DES BY: S. SPENCE
CHK BY: D. ALBRIGHT
DATE: 12-10-12

= NOTE

REVISIONS

CSX TRANSPORTATION
RAIL TRANSPORT GROUP ENGINEERING
COMMUNICATIONS AND SIGNALS

127TH ST. (BURR OAK AVE.) 163419K

RECORDER PROGRAM
BLUE ISLAND, IL M.P. DC-15.97

DESIGNED	DIGITIZED	CHECKED	DATE
IRC/SWS	IRC/SWS	IRC/DBA	12-10-12

NEXT FILE	NEXT SH	FILE	SHEET
-----	-----	DC01597	C05

	DEFAULTS AND/OR STYLE	FIELD RECORD
SEAR II EXECUTIVE PROGRAM	VERSION. 9V645A01Y	VERSION.
APPLICATION PROGRAM (IF LOADED)	VERSION. 9V736-A02A	VERSION.

SITE SET UP OPTIONS		
OPTION	SELECTION	
DATE	XX-XX-XXXX	
TIME	[XX:XX:XX]	
DAYLIGHT SAVINGS TIME	YES ■ NO □	
TIME ZONE	■ EST □ CST	
SITE NAME	127TH ST. (BURR OAK AVE.)	
MILEPOST	DC-15.97	
DOT NUMBER	163419K	
TESTER TYPE	■ CROSSING □ WAYSIDE	
DATE FORMAT	■ MM-DD-YYYY □ DD-MM-YYYY	
TEMP FORMAT	■ FAHRENHEIT □ CELSIUS	
INDICATE HOLDOFF	0	
INDICATE REFRESH	60	
SITE TYPE	□ NO COMMUNICATION □ DIAL-UP ■ COLLECTOR □ NODE □ BULLHORN/MODE □ CDS902X	
SITE ATCS ADDRESS	7.125.309.001.99.01 (7.RRR.LLL.GGG.99.01)	NOTE 4
OFFICE ADDRESS	2.125.00.0000 (2.RRR.NN.DDDD)	
OFFICE SITE ADDRESS	NA	
BACK UP SITE ADDRESS 1	NA	
BACK UP SITE ADDRESS 2	NA	
POLL ID (1-99)	1	
GEN/ATCS MODE	□ GENISYS ■ GEN/ATCS	
WAG XID ENABLED	□ YES ■ NO	
OFFICE COM. DEVICE	□ DIRECT □ MCM (RS232) □ MCM (ECH) ■ WAG (ECHELON) □ DIAL UP (RS232) □ S200 RADIO (RS422)	NOTE 5
RADIO ATCS ADDRESS	7.125.XXX.XXX.XX.XX	
OFFICE PHONE NUMBER	1-XXX-XXX-XXXX	
INIT. STRING		
FIELD COMM	□ VHF (ECH) □ VHF (RS232) □ WAG (ECH) □ SS (RS232) ■ NONE	
USER PORT	BAUD RATE (9600)	
AUX PORT	BAUD RATE (38400)	NOTE 6
COMM PORT	BAUD RATE (9600)	

NOTES.

1. LARGE CONFIGURATION ASSIGNS RECORDER INPUTS FOR USE WHEN DIGITAL I/O MODULE REQUIRED.
2. IF WARNING DEVICE = NONE MAIN/STANDBY OPTION NOT SHOWN.
3. IF VHF COMMUNICATIONS = NO THEN DTMF ACTIVATION AND CHANNEL OPTIONS ARE NOT SHOWN.
4. DEFAULT ADDRESS 7.620.100.100.99.01 USED FOR STAND ALONE LOCATIONS.
5. OPTIONS NOT SHOWN IF SITE TYPE = NO COMMUNICATIONS.
6. FORMAT AS. BAUD, DATA BITS, PARITY STOP BITS, FLOW CONTROL.

SITE SET UP OPTIONS CONT.		
	OPTION	SELECTION
	RAILROAD NUMBER	125
NOTE 1	CROSSING CONFIGURATION	STANDARD ■ LARGE □ REMOTE □ SPLIT GATE □ ISL ONLY □ CP COLLECTOR □
	NUMBER OF XR INPUTS	0 □ 1 ■ 2 □ 3 □ 4 □
	NUMBER OF ISL INPUTS	0 □ 1 □ 2 ■ 3 □ 4 □
	CONSTANT WARNING DEVICE	GCP ■ OTHER □ NONE □
	TOTAL NUMBER OF GCP NODES	1 ■ 2 □ 3 □ 4 □ 5 □
	NUMBER OF REDUNDANT GCP	1 ■ 2 □ 3 □ 4 □
	CROSSING CONTROLLER 1	SSCC IIIA / PLUS □ SSCC IV □ OTHER □ NONE ■
	POK2	YES ■ NO □
NOTE 2	MAIN / STANDBY	YES ■ NO □
	AUXILIARY TRACKS	0 ■ 1 □ 2 □
	ENTRANCE GATE	0 □ 1 □ 2 ■
	GATE POSITION FAIL 10-60 SEC	31
	NUMBER OF UAX INPUTS	0 ■ 1 □ 2 □
	BATTERY BANKS	1 □ 2 □ 3 ■ 4 □ 5 □ 6 □
	OB RESOLUTION	.2 □ .5 □ 1.0 ■
	X-B RESOLUTION	.2 □ .5 □ 1.0 ■ NOT PRESENT □
	B-G RESOLUTION	.2 □ .5 □ 1.0 ■ NOT PRESENT □
	X-B2 RESOLUTION	.2 □ .5 □ 1.0 □ NOT PRESENT ■
	B-G2 RESOLUTION	.2 □ .5 □ 1.0 □ NOT PRESENT ■
	X-B3 RESOLUTION	.2 □ .5 □ 1.0 □ NOT PRESENT ■
	PREEMPTION	NORMAL □ ADVANCED □ NO ■
	KDR INPUT	YES ■ NO □
NOTE 3	VHF COMMUNICATOR	YES □ NO ■
	ACTIVATION TIMEOUT (30 TO 600 SECONDS)	60
	iLOD MODULES	0 □ 1 □ 2 ■ 3 □ 4 □ 5 □ 6 □
	ANY LED BULBS	NO □ YES ■
	AUTO INSPECTIONS	YES □ NO ■
	BELL ON	GATES LOWERING ■ GATES MOVING □ ALWAYS □
	GROUND FAULT DETECTORS	YES ■ NO □
	BATTERIES ON GFT1	1 □ 2 ■
	FULL APPROACH MOVE ALARMS	ACTIVATED ■ DO NOT ACTIVATE □

LIT BULB COUNT ON EACH CIRCUIT	NO.	TYPE OF BULB	CURRENT READING IN AMP. AT APPROX. 10.0 V BULB VOLTAGE
CURRENT SENSOR (1) E1C. LAMP SET UP	7	□BULBS ■LED	5.6
CURRENT SENSOR (1) E2A. LAMP SET UP	7	□BULBS ■LED	5.6
CURRENT SENSOR (2) E2C. LAMP SET UP	8	□BULBS ■LED	6.6
CURRENT SENSOR (2) E1A. LAMP SET UP	8	□BULBS ■LED	6.6

NEW WORK

SII #: JXXD04086
CSX #: IL2012035B
DATE: 02-18-14
INITIALS: SII/JCW/SWS

SIEMENS

~~XXX~~ = OUT

REVISIONS

CSX TRANSPORTATION
RAIL TRANSPORT GROUP ENGINEERING
COMMUNICATIONS AND SIGNALS

127TH ST. (BURR OAK AVE.) 163419K

SEAR II CONFIGURATION AND FUNCTIONS
BLUE ISLAND, IL M.P. DC-15.97

DESIGNED	DIGITIZED	CHECKED	DATE
SII/JCW	SII/JCW	SII/SWS	2-18-14

NEXT FILE	NEXT SH	FILE	SHEET
DC01597	C06	DC01597	C05 (A)

3000ND2WSR.C06
REV. 07-03-13

DISCRETE INPUTS	DI 01	DI 02	DI 03	DI 04	DI 05	DI 06
CHANNEL	1	2	3	4	5	6
NAME	XR1		ISLAND 1 (TRACK)	ISLAND 2 (TRACK)	MAIN/STANDBY	BELL OUT (BELL PWR)
TAG	XR1 (XR)	SP	ISL1	ISL2	M/S	BELL OUT (BELL PWR)
OFF NAME	DOWN (XR)		DOWN (ISL1)	DOWN (ISL2)	DOWN (STANDBY)	OFF (BELL PWR)
ON NAME	UP (XR)		UP (ISL1)	UP (ISL2)	UP (MAIN)	ON (BELL PWR)
ON DEBOUNCE TIME	100 ms	1000 ms	100 ms	100 ms	100 ms	100 ms
OFF DEBOUNCE TIME	100 ms	1000 ms	100 ms	100 ms	100 ms	100 ms
TOGGLE PERIOD	1000 ms	1000 ms	1000 ms	1000 ms	1000 ms	1000 ms

TSS INPUTS	DI 07	DI 08	DI 09	DI 10
CHANNEL	7	8	9	10
NAME	AGP	BGP	AGDP	BGDP
TAG	AGP (GP)	BGP (GP)	AGDP	BGDP
OFF NAME	LIGHTS FLASH	LIGHTS FLASH	NOT HORIZ	NOT HORIZ
ON NAME	GATE VERTICAL	GATE VERTICAL	GATE HORIZ	GATE HORIZ
ON DEBOUNCE TIME	100 ms	100 ms	100 ms	100 ms
OFF DEBOUNCE TIME	100 ms	100 ms	100 ms	100 ms
TOGGLE PERIOD	1000 ms	1000 ms	1000 ms	1000 ms

DISCRETE INPUTS	DI 11	DI 12	DI 13
CHANNEL	11	12	13
NAME	GATE CONTROL	DTMF	AUX TRACK
TAG	GCOUT1 (GCK)	DTMF-REC	AUX
OFF NAME	OFF (DESCENT)	OFF (NO GATE KEYED)	(NOT USED)
ON NAME	ON (ASCENT ON)	ON (ACTIVATE)	(NOT USED)
ON DEBOUNCE TIME	100 ms	100 ms	100 ms
OFF DEBOUNCE TIME	100 ms	100 ms	100 ms
TOGGLE PERIOD	1000 ms	1000 ms	1000 ms

GFT INPUTS	DI 14	DI 15
CHANNEL	14	15
NAME	GND FAULT TESTER 1 (GFT1,2)	GND FAULT TESTER 2 (GFT3,4)
TAG	GFT1 (GFT1 DATA)	GFT2 (GFT2 DATA)
BATTERY 1 NAME	OB (GND FAULT)	B-G (GND FAULT)
BATTERY 1 TAG	OB (GND FAULT)	B-G (GND FAULT)
BATTERY 2 NAME	X-B (GND FAULT)	SP.
BATTERY 2 TAG	X-B (GND FAULT)	SP.

DISCRETE INPUTS	DI 16	DI 17	DI 18
CHANNEL	16	17	18
NAME		120 VAC	POK2
TAG	SP	120 VAC	POK2
OFF NAME		OFF (ALL POWER OFF)	OFF (ALL POWER OFF)
ON NAME		ON (ALL POWER ON)	ON (ALL POWER ON)
ON DEBOUNCE TIME	1000 ms	100 ms	100 ms
OFF DEBOUNCE TIME	1000 ms	100 ms	100 ms
TOGGLE PERIOD	1000 ms	1000 ms	1000 ms

BATTERY INPUTS	BI1	BI2	BI3
CHANNEL	1	2	3
NAME	OB (ELECTRONIC BATT)	X-B (BULB BATT)	B-G (GATE BATT)
TAG	OB	X-B	B-G
SAMPLE PERIOD (ms)	500 (ms)	500 (ms)	500 (ms)
RESOLUTION (V)	0.2 (VOLTS)	0.2 (VOLTS)	1.0 (VOLTS)
AVGERAGING SAMPLES	32 SAMPLES	32 SAMPLES	32 SAMPLES

RELAYS	RO1	RO2
CHANNEL	1	2
NAME	GFT TEST	AC POWER TEST (ACRLY)
TAG	SELF TEST	AC POWER TEST (ACRLY)
OFF STATE NAME	NOT TESTING	(NOT USED)
ON STATE NAME	TESTING	(NOT USED)
UNKNOWN STATE NAME	PULSE	
ON PULSE TIME (s)	1 (s)	
OFF PULSE TIME (s)	1 (s)	
TOGGLE PERIOD (s)	1 (s)	
DUTY CYCLE	50	

NEW WORK

SII #: JXXD04086
CSX #: IL2012035B
DATE: 02-18-14
INITIALS: SII/JCW/SWS

SIEMENS

NOTE. ( ) DENOTES NOMENCLATURE FOR CLARIFICATION AND WILL NOT DISPLAY ON LOG REPORTS.

REVISIONS

3000ND2WSR.C07
REV. 07-03-13

CSX TRANSPORTATION
RAIL TRANSPORT GROUP ENGINEERING
COMMUNICATIONS AND SIGNALS

127TH ST. (BURR OAK AVE.) 163419K

SEAR II CHANNELS
BLUE ISLAND, IL M.P. DC-15.97

DESIGNED	DIGITIZED	CHECKED	DATE
SII/JCW	SII/JCW	SII/SWS	2-18-14
NEXT FILE	NEXT SH	FILE	SHEET
DC01597	C07	DC01597	C06

WAYSIDE ACCESS GATEWAY CONFIGURATION	
SITE ATCS ADDRESS	7.125.309.001.07.01 7.125.LLL.GGG.SS.DD
SERIAL INTERFACE	9600,NONE,8,1/NOFLOW
SERIAL FORMAT	RAW
WAG TEST MODE	DISABLED
ECHELON ADDRESS	01.01
UDP PORTS	5000, 5001, 5002, 5003
ROUTE TABLE EXPIRY	5400 SEC
BROADCAST MEDIUM	IP ETHERNET
TCP PORTS	6001
DHCP SERVER	DISABLED
IP ADDRESS	192.168.13.1
TYPE 7 ROUTE LENGTH	12--7RRRLLLGGGSS
IP NETWORK MASK	255.255.255.000

NOTE TO INSPECTOR.
AT INSTALLATION OF CDMA BY COM.
MARK-UP CONFIGURATION TABLE FOR
AS IN SERVICE PLANS

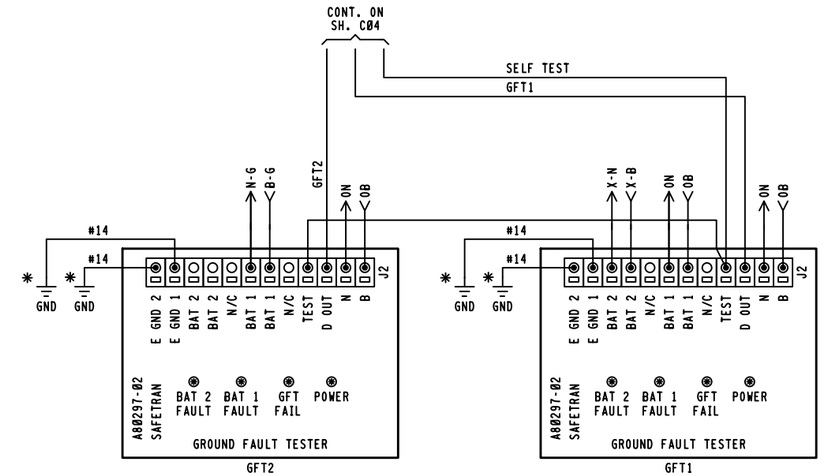

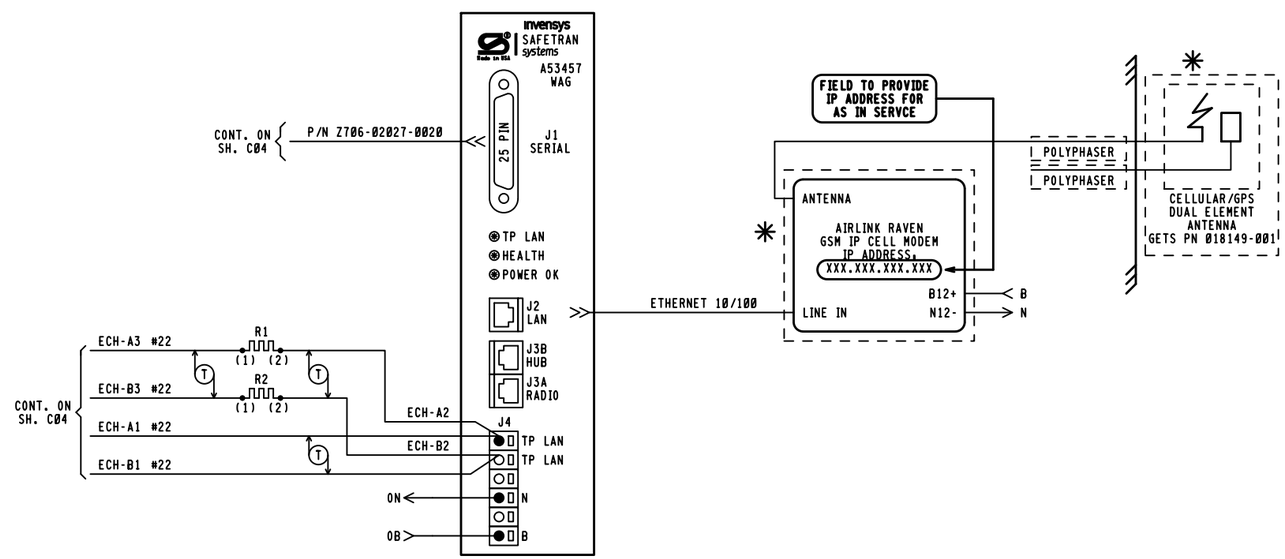

COMM NOTES.

1. WAG J3A PINOUTS.
   4 & 5 = +12VDC RADIO OUT
   7 & 8 = GND RADIO RETURN
2. WAG AND SEARII ECHELON COMM THROUGH GCP3000 LONTALK PROTOCOL CONNECTION

NEW WORK

SII #: JXXD04086
CSX #: IL2012035B
DATE: 02-18-14
INITIALS: SII/JCW/SWS

SIEMENS

( ) = NOTE
✳ = REUSE EXISTING

NOTE.

1. ALL WIRING #16 UNLESS NOTED OTHERWISE.
2. ✳ = EARTH GROUND REF. TERMINALS REQUIRED FOR DETECTION. DO NOT JUMPER TERMINALS. MUST BE CONNECTED TO DIFFERENT POINTS OF BUNGALOW.

REVISIONS	CSX TRANSPORTATION RAIL TRANSPORT GROUP ENGINEERING COMMUNICATIONS AND SIGNALS			
	127TH ST. (BURR OAK AVE.) 163419K WAYSIDE ACCESS GATEWAY BLUE ISLAND, IL M.P. DC-15.97			
	DESIGNED SII/JCW	DIGITIZED SII/JCW	CHECKED SII/SWS	DATE 2-18-14
3000ND2WSR.C08 REV. 07-03-13	NEXT FILE -----	NEXT SH -----	FILE DC01597	SHEET C07