Completion of this form is necessary to accomplish the statutory purpose as outlined in the Illinois Public Utilities Act, chapter 111 2/3, Sec. 9. Failure to provide the requested information may prevent your request from being processed. This form has been approved by the Forms Management Center.

Form 3

STATE OF ILLINOIS
ILLINOIS COMMERCE COMMISSION

Petition for permission to make a major change in crossing protection, or to install new protection under 92 Illinois Administrative Code 1535.400 (d)

Date: **January 2, 2014**

To the Illinois Commerce Commission:

The petitioner **CSX Transportation** shows

(1) That it is a railroad company operating a line of railroad in the State of Illinois.

(2) That petitioner proposes and hereby makes application for authority to make a major change in crossing protection, or to install new protection, under 92 Illinois Administrative Code 1535.400 (d) adopted by this Commission.

(3) That the location of the crossing, the nature of protection now established and proposed to be established, and other pertinent facts in connection therewith, are set forth in the statement attached to and forming part of this petition.

(4) That petitioner's reasons and purpose, with reference to its said proposal are

Installation of Flashing Light Signals and Gates with CWT, at Prairie View Rd.

(5) That the facts set forth in this petition and in the statement and plans or plats attached thereto, are, all of them, true and correct to the best of petitioner's knowledge and belief.

WHEREFORE, the petitioner prays that the Commission will, if deemed desirable by the Commission, set the aforesaid matter for hearing, and that the Commission enter an order or adopt a resolution consenting to and granting authority for the making of the said proposed changes in or additions to crossing protection.

CSX Transportation

By

Amanda J. DeCesare
Project Manager, CSXT Public Projects
(859) 426-6924

Sean Craig
(Attorney for Petitioner)

CSX Transportation
500 Water Street, SC J-150
Jacksonville, FL 32202
(Attorney's Address)

Statement, attached to and part of an application for permission to make a major change in crossing protection or to install new protection, under 92 Ill. Adm. Code 1535.400(d).

1. Name of Railroad Company **CSX Transportation**

2. Crossing Number **154628U**

3. Village or City **near Decatur, IL**

4. Name of Street or Highway **Prairie View Rd.**

5. Public Agency Maintaining Highway **D.O.T.**

6. Protection now established: (Give full description. Indicate the hours of any manual protection.)

   Flashing Light Signals

7. Protection desired: (Give details)

   Flashing Light Signals and Gates with CWT detection equipment.

8. Number of main tracks **1** Other tracks **0**

9. Number of passenger train movements: 6 a.m. to 6 p.m. **0** 6 p.m. to 6 a.m. **0**

10. Number of freight train movements: 6 a.m. to 6 p.m. **2** 6 p.m. to 6 a.m. **0**

11. Approximate number of switch movements: 6 a.m. to 6 p.m. **1** 6 p.m. to 6 a.m. **0**

12. Maximum speed of trains at crossing on each track in each direction

Track 1 N/E Bound	**30**	mph	S/W Bound	**30**	mph
Track 2 N/E Bound	**N/A**	mph	S/W Bound	**N/A**	mph
Track 3 N/E Bound	**N/A**	mph	S/W Bound	**N/A**	mph

13. Passenger platforms served by tracks within the limits of track circuits, if any **N/A**

14. Where automatic signals or gates are proposed, approximately number of train or engine movements daily which would cause false indications or operation **0**

15. Nature and approximate amount of street or highway traffic over crossing
AADT: 1500; Percent Trucks: 8; Buses: 0; AADT Year: 2010

16. In addition to the information listed hereinbefore in Form 3, attach a track plan or plat of the proposed crossing. This plan should show:

(a) Width and surface of highway.
(b) Highway intersections (including private driveways to be so indicated) and location of established highway signs or signals within 100 feet of crossing.
(c) Location of tracks, switches and other railroad facilities such as block signals, etc. within limits of track circuits, present and/or proposed.
(d) Where automatic protection is proposed, show proposed location of signals (sidelights, cantilevers, etc., if any).
(e) Show the length of each operation track section within the control limits of the crossing protection and its function.

ADDITIONAL INFORMATION

VERIFICATION

I, **Amanda J. DeCesare**, first being duly sworn upon oath depose and say that I am **Project Manager Public Projects** of **CSX Transportation**, an **Virginia** corporation; that I have read the above and foregoing petition by me subscribed and know the contents thereof; that said contents are true in substance and in fact, except as to those matters stated upon information and belief, and as to those, I believe same to be true.

Project Manager Public Projects

CSX TRANSPORTATION, INC.
FORCE ACCOUNT ESTIMATE

ACCT. CODE : 709 - IL0395

ESTIMATE SUBJECT TO REVISION AFTER: **7/1/2014** **DOT NO.:** 154628u
CITY: Decatur **COUNTY:** Macon **STATE:** IL
DESCRIPTION: Prairie View Rd. - Installation of Flashing Light Signals & Gates with CWT.

DIVISION: Nashville **SUB-DIV:** Decatur **MILE POST:** BD - 269.93
AGENCY PROJECT NUMBER: RRP-5169(050)

	PRELIMINARY ENGINEERING:		
200	Labor (Non Contract)	$	-
200	Additive	$	-
230	Expenses	$	-
212	Contracted & Administrative Engineering Services	$	3,500
	Subtotal	$	3,500
	CONSTRUCTION ENGINEERING/INSPECTION:		
200	Labor (Non Contract)	$	-
200	Additive	$	-
230	Expenses	$	-
212	Contracted & Administrative Engineering Services	$	1,500
	Subtotal	$	1,500
	FLAGGING SERVICE: (Contract Labor)		
070	Labor (Conductor-Flagman)	$	-
050	Labor (Foreman/Inspector)	$	-
070	Additive 117.39% (Transportation Department)	$	-
050	Additive 118.86% (Engineering Department)	$	-
230	Per Diem (Engineering Department)	$	-
230	Expenses	$	-
	Subtotal	$	-
	SIGNAL & COMMUNICATIONS WORK: (Details Attached)	$	159,211
	TRACK WORK: (Details Attached)	$	-
	PROJECT SUBTOTAL	$	164,211
900	**CONTINGENCIES:** 10.00%	$	16,421
	GRAND TOTAL **********	$	180,632

DIVISION OF COST:

Agency	100.00%	$	180,632
Railroad		$	-
TOTAL	**********	$	180,632

NOTE: Estimate is based on FULL CROSSING CLOSURE during work by Railroad Forces.

This estimate has been prepared based on site conditions, anticipated work duration periods, material prices, labor rates, manpower and resource availability, and other factors known as of the date prepared. The actual cost for CSXT work may differ based upon the agency's requirements, their contractor's work procedures, and/or other conditions that become apparent once construction commences or during the progress of the work

Office of Assistant Chief Engineer Public Projects--Jacksonville, Florida

Estimated prepared by: BSE **Approved by:** AJD **CSXT Public Project Group**
DATE: 1/2/2014 **REVISED:** **DATE:** 1/2/2014

Estimate No. 123318

CSX Transportation

Prairie View Rd.(FAS 1547) - Install FLS&G (Installation of flashing light signals, gates and CWT circutry. Federal Funds - funded by Federal Highway Adminis

Decatur, IL

DOT: 154628U OP: IL0395 CSX Project: IL2013017

Summary

Material	$ 69,878
Sales Tax	$ 0
Labor:	
Construction Labor (75 man-days)	$ 20,082
Shop Labor (6 man-days)	$ 960
Subsistence (75 man-days)	$ 7,875
Railroad Engineering, Preliminary	$ 4,232
Railroad Engineering, Construction	$ 3,012
Additives to Construction Labor	$ 23,869
Additives to Shop Labor	$ 1,141
Additives to Track Labor	$ 0
Additives to Engineering	$ 0
Equipment Expenses (0 work days)	$ 0
Waste Management (16 work days)	$ 384
Contract Engineering	$ 15,584
Freight	$ 4,694
Poleline Removal	$ 0
AC Power Service	$ 2,500
Salvage	$ 0
Vac Truck	$ 5,000
TOTAL ESTIMATE COST	$ 159,210

Date: 01/02/2014
Estimated By: Scott Elliott

NOTE: This estimate should be considered void one year from date of estimate.

Shop Material List for CSX Project: IL2013017 (Effective: 01/02/2014)
INSTALL GCP-3000 W/ FLASHERS & GATES
DECATUR, IL - BD 269.93

Catalog Num	Cond	Unit Price	Qty	Cost	Description
020-0003386	1	6781.00	1	6781.00	HOUSE 6X6L ALUM INCLUDES 5 SHELFS, FARADAY CLOSET, 240V
020-0017120	1	11.64	6	69.84	BLOCK TERMINAL 12 POST SINGLE STRIP AAR 14.1.6 WITH 1 AAR
020-0017125	1	3.54	6	21.24	BLOCK TERMINAL 2 POST AAR 14.1.8 WITH 1 AAR 14.1.11
020-0017211	1	627.20	1	627.20	TRANSFORMER 010520-50X LIGHT 750VA MOD SLT 50 SAFETRAN PRI
020-0021965	1	8.96	1	8.96	EXTRACTOR DWG 59688-4 TERMINAL GRS CAT P3-308 REF
020-0022651	1	70.00	6	420.00	PLUGBOARD KIT TYPE B1 OR ST1 RELAY ASSEMBLY WITH 12 EACH
020-0022701	1	68.01	26	1768.26	ARRESTER LPC 15012-1 0-30V DC OR 0-24V AC RATED AT 15 AMP
020-0025595	1	20.72	1	20.72	WRENCH DWG 55393-3 GR1 "E" TERMINAL POST NUT GRS CAT
020-0053360	1	386.40	3	1159.20	CHARGER BATTERY ELC 12/20 S 20 AMP 10-19.9 VDC ROTARY SW
020-0053510	1	254.11	1	254.11	KIT 240V AC EMERGENCY GENERATOR CABLE AND
020-0660077	1	603.13	1	603.13	ARRESTER GE 9L10KAC213 FOR 240 VOLT SINGLE PHASE 3 WIRE
020-0750090	1	0.10	3	0.30	NUT INSULATED USE ON AAR BINDING POST TERMINAL FOR
020-0770060	1	13.84	8	110.72	ARRESTER US&S N451552-0201 TRACK SERIES RED LABEL USGA
020-0770105	1	22.40	2	44.80	ARRESTER HARMON 202217-000 AGE-1 TRACK AIR GAP EQUALIZER
020-1940055	1	14.22	1	14.22	CONTAINER CIRCUIT PRINT 24" SCHEDULE 20 4" PVC PIPE WITH
020-2501400	1	1043.84	1	1043.84	CONTROLLER DTMF RADIO KEY DOWN MODE 6 SET TIMER TO 60
020-2503074	1	170.46	2	340.92	MODULE SAFETRAN RECORDER INTERFACE USED WITH SEAR II
020-2503076	1	101.30	1	101.30	CONNECTOR SAFETRAN NETWORK INTERFACE REQUIRED FOR USE
020-2550070	1	6883.21	1	6883.21	PREDICTOR SAFETRAN GCP-3000ND2 REDUNDANT SYSTEM
020-3180290	1	4878.63	1	4878.63	KIT, SEAR II FOR REMOTE MONITORING, ALARMS & TESTING,
020-3430110	1	372.24	1	372.24	RELAY SAFETRAN 400004 500 OHMS CONTACTS 4FB-2F-1B CSX
020-3430115	1	471.60	1	471.60	RELAY SAFETRAN 400005 500 OHMS CONTACTS 4FB HEAVY DUTY
020-3430130	1	365.31	1	365.31	RELAY SAFETRAN 400023 500 OHMS CONTACTS 6FB HEAVY DUTY
020-3430135	1	563.70	1	563.70	RELAY SAFETRAN 400213 460 OHMS CONTACTS 2FB CSX
020-3430170	1	464.35	1	464.35	RELAY SAFETRAN 400800-CSX 100/100 OHMS CONTACTS 6FB

Shop Material List for CSX Project: IL2013017 (Effective: 01/02/2014)
INSTALL GCP-3000 W/ FLASHERS & GATES
DECATUR, IL - BD 269.93

Catalog Num	Cond	Unit Price	Qty	Cost	Description
020-3430185	1	481.95	1	481.95	RELAY SAFETRAN 400700-X 60 OHMS CONTACTS 4FB CSX
020-4200100	1	7.45	3	22.35	CONNECTOR BUS 1" CENTERS 1/2" X 36" 18 GAGE PUNCHED 1/4" X
020-4200340	1	1.74	8	13.92	LINK TEST ASSEMBLY 1" CENTERS COMPLETE WITH INSULATED
020-4200350	1	2.06	9	18.54	LINK TEST ASSEMBLY 2-3/8" CENTERS COMPLETE WITH
020-4201045	1	0.15	300	45.00	NUT HEX CLAMP (FLAT NUT) AAR 14.1.11-7 14-24 NS-2 THD FLAT
020-8000067	1	14.87	2	29.74	LOCK AMERICAN H10SIGRA CSX SIGNAL PADLOCK WITH BLACK
020-9470485	1	638.02	2	1276.04	MODULE SAFETRAN GCP-3000 INTELLIGENT PROGRAMMABLE
022-5290559	1	364.00	1	364.00	CONVERTER WILMORE INPUT 10V DC TO 16V DC OUTPUT 13.6V DC
022-8005160	1	594.61	1	594.61	KIT CDMA AND VHF RADIO MATERIAL FOR USE WITH CSX

Total Cost: $ 30,234.95

Estimate ID: 123318

Field Material List for CSX Project: IL2013017 (Effective: 01/02/2014)
INSTALL GCP-3000 W/ FLASHERS & GATES
DECATUR, IL - BD 269.93

Catalog Num	Cond	Unit Price	Qty	Cost	Description
020-0013686	1	72.73	2	145.46	BOOTLEG KIT CSX RAIL CONN W/15 FT 3/16 IN BDSTRAND 6/64
020-0013908	1	7.16	275	1969.00	CABLE UG COMPOSITE 19 CONDUCTOR INCLUDES 13
020-0052475	1	11.20	4	44.80	ARM EXTENSION 10-1/2" ALUM WITH 3/8" DIAMETER MOUNTING
020-0053066	1	4.84	12	58.08	BOND WEB OF RAIL TRACK CONNECTOR 3/16" DIA X 1" TAB
020-0053220	1	2.59	150	388.50	CABLE POWER UG 3 COND NO 6 AWG - SHOW LENGTH ON EACH
020-0054075	1	963.20	2	1926.40	GATE GARD NORMAL MOVEMENT COMPLETE WITH SHEAR PIN AND
020-0055421	1	18.61	6	111.66	BRACKET SIGN 4" OR 5" MAST W/1/2" U-BOLT FOR ALL SIGNS
020-0056626	1	7597.07	1	7597.07	SIGNAL 0229-L GCWD GATE ASSY DWG SS222 INCLS ADJ 19 TO 28
020-0056678	1	6295.13	1	6295.13	SIGNAL 0221-L GCWD GATE ASSY DWG SS222 INCLS ADJ 19 TO 28
020-0057275	1	1.20	275	330.00	WIRE UG TRACK TWISTED PAIR NO. 6 AWG SOLID CONDUCTOR
020-1020095	1	1678.83	2	3357.66	PLATFORM HIGHWAY CROSSING ACCESS FOUNDATION COMPLETE
020-1040322	1	150.74	30	4522.20	BATTERY SAFT SPL165, 165 AH POCKET PLATE NICKEL CADMIUM
020-1040540	1	31.36	4	125.44	TRAY BATTERY FIBER CO 82687-1-P 12" WIDTH 24" LONG
020-1040550	1	45.92	1	45.92	TRAY BATTERY FIBER CO 82687-3-P 12" WIDTH 38"
020-1153550	1	4.31	8	34.48	CLIP TRACK WIRE RETAINER UNIVERSAL RAIL BASE WRAP
020-1360014	1	860.68	1	860.68	PACKAGE FOREMANS CARE FOR ALUMINUM TYPICAL BOM FOR USE
020-1360016	1	22.49	1	22.49	PACKAGE SAFETY & SECURMENT WITH 1 EA CAUTION TAG 1 EA
020-1360103	1	1498.00	1	1498.00	LAYOUT AC METER SERVICE WITH 25’ POLE CSX DWG SS351 SH 2
020-3263656	1	1.85	4	7.40	SLEEVE BONDSTRAND 3/16" TO 3/16" 100 PER BOX, NICOPRESS
020-3263680	1	0.35	20	7.00	STAPLE COPPERWELD ROLLED POINT 1-3/4" LONG, 3/8"
020-3901895	1	100.52	2	201.04	TIP FLEX HWY CROSSING GATE 24 IN LONG RED & WHITE STRIPES
020-3920200	1	178.08	2	356.16	BELL GCWD ELECTRONIC 4" OR 5" MAST 8 TO 13 VOLTS DC GSI PN
020-3930010	1	3.70	2	7.40	KIT GATE ARM WARNING STICKER KIT INCLUDES 1-EA 5"X3"
020-4200340	1	1.74	30	52.20	LINK TEST ASSEMBLY 1" CENTERS COMPLETE WITH INSULATED
020-4200900	1	0.28	6	1.68	CONNECTOR SHEATHING AMP 329860 FOR NO. 14 WIRE

Field Material List for CSX Project: IL2013017 (Effective: 01/02/2014)
INSTALL GCP-3000 W/ FLASHERS & GATES
DECATUR, IL - BD 269.93

Catalog Num	Cond	Unit Price	Qty	Cost	Description
020-4201042	1	0.15	45	6.75	NUT HEX BINDING (RSA NUT) AAR 14.1.11-6 14-24 NS-2 THD CONE
020-4201043	1	0.12	270	32.40	NUT HEX CLAMP (FLAT NUT) AAR 14.1.11-7 14-24 NS-2 THD FLAT
020-4201044	1	0.11	225	24.75	WASHER AAR 14.1.11 ROUND COPPER NICKEL PLATED FOR AAR
020-7300031	1	200.48	2	400.96	BRACKET BELL FITS WESTERN CULLEN HAYES JUNCTION BOX
020-9999991	1	100.00	1	100.00	BLOCKING AND BRACING FOR PROJECTS BURCO DIST
250-0001827	1	15.26	1	15.26	BREAKER CIRCUIT SQ D QO235
360-0006100	1	35.07	1	35.07	STOOL STEP WOOD 14"X 20" SIGNAL MAINTAINERS CSXT
360-0800145	1	5.32	1	5.32	BROOM WAREHOUSE CORN HVY DUTY ID300

Total Cost: $ 30,586.36

Estimate ID: 123318

Consumables List for CSX Project: IL2013017 (Effective: 01/02/2014)
INSTALL GCP-3000 W/ FLASHERS & GATES
DECATUR, IL - BD 269.93

Catalog Num	Cond	Unit Price	Qty	Cost	Description
N/A		50.00	100	5000.00	FILL MATERIAL, 1 CUBIC YARD
N/A		800.00	1	800.00	WALKWAY ROCK, 10 CUBIC YARDS
020-0017605	1	0.30	350	105.00	WIRE CASE 10 AWG FLEX CSX SPEC SS796 OKONITE
020-0017607	1	0.75	500	375.00	WIRE CASE TW PR NO 10 AWG FLEX CSX SPEC SS796 TWIST 2
020-0017625	1	0.45	150	67.50	WIRE CASE TW PR NO 14 AWG FLEX CSX SPEC SS796 TWIST 2
020-0017630	1	0.14	200	28.00	WIRE CASE NO 16 AWG FLEX CSX SPEC SS796 FURN 1000 FT SPOOL
020-0017635	1	0.80	130	104.00	WIRE SIGNAL DEL 018 NO 6 COPPER STRANDED SINGLE
020-0028610	1	0.23	100	23.00	TERMINAL RING AMP 35628 YELLOW PLASTI-BOND HVY DUTY
020-1710055	1	1.85	200	370.00	CONDUIT SDR 13.5 4" ORANGE POLYETHYLENE TRENCHLESS
020-2060072	1	442.00	2	884.00	FOUNDATION HELICAL SCREW-IN ASSEMBLY 7’ X 10", USED FOR
020-2060074	1	571.20	2	1142.40	EXTENSION 10" X 3’ USE WITH XING GATE AND SIGNAL MAST
020-3261970	1	9.41	2	18.82	DECAL ASSY 2" BLACK PRESSURE SENSITIVE VINYL PRE-MASKED
020-4200880	1	0.53	2	1.06	CONNECTOR TERMINAL 2-3/8" CENTERS AAR 14.1.15-4 NICKEL
020-4200892	1	0.44	27	11.88	CONNECTOR TERMINAL 1" CENTERS AAR 14.1.15-3 NICKEL PLATED
020-4251190	1	0.14	120	16.80	TERMINAL RING AMP 35627 BLACK PLASTI-BOND WIRE SIZE 10-12
020-4251290	1	0.53	30	15.90	TERMINAL WIRE AMP 322051 BLUE WIRE SIZE NO 6 AWG 1/4" STUD
020-4251295	1	0.53	6	3.18	TERMINAL WIRE AMP 322007 BLUE WIRE SIZE NO 6 AWG 3/8" STUD
020-9999992	1	50.00	1	50.00	HOUSE, SIGNAL HANDLING CHARGE, BURCO DISTRIBUTION
450-0019212	1	0.40	100	40.00	SCREW 10 X 1" SHT METAL PAN HD TYPE A COARSE THREAD

Total Cost: $ 9,056.54

Estimate ID: 123318

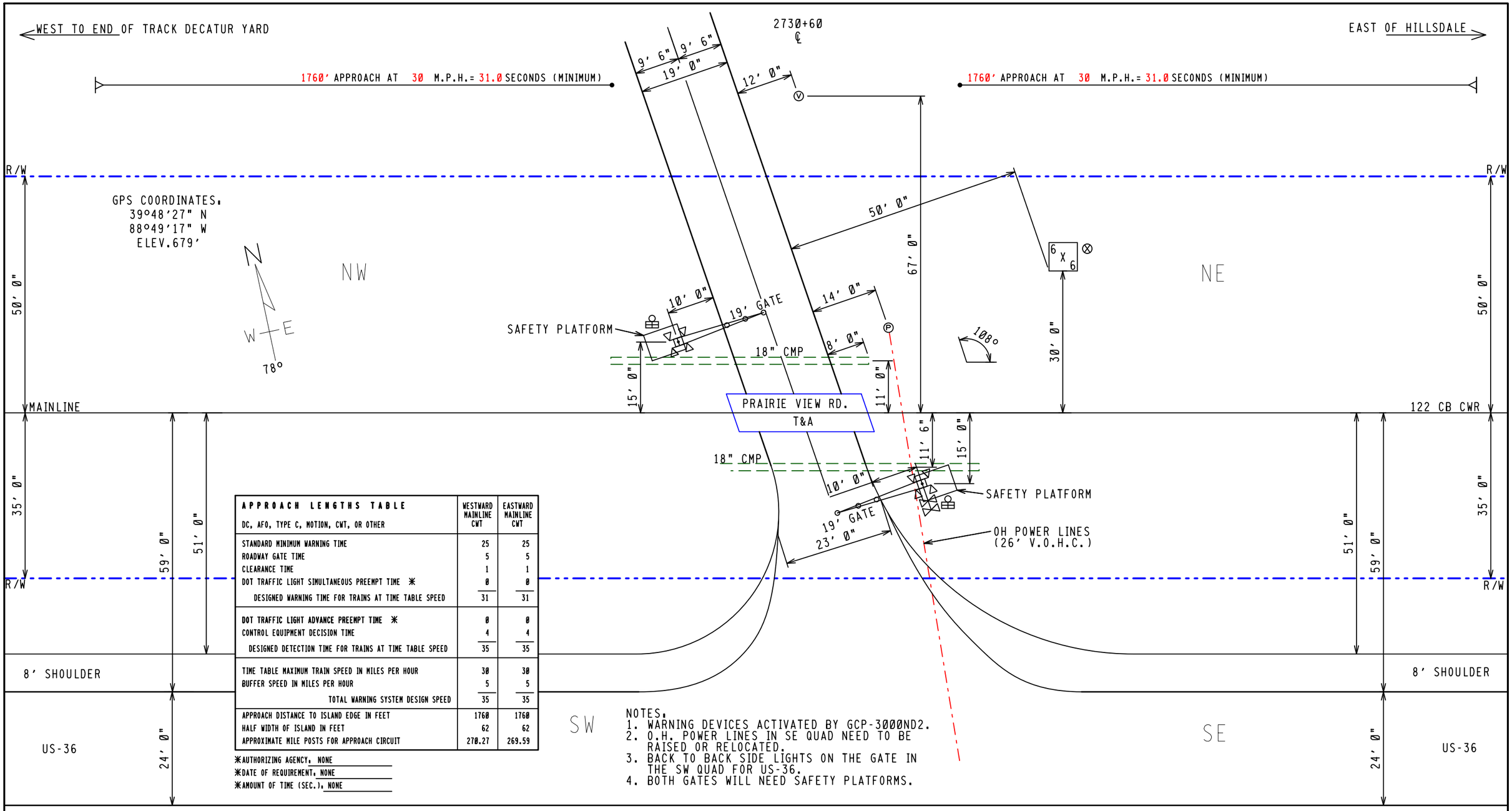

APPROACH LENGTHS TABLE DC, AFO, TYPE C, MOTION, CWT, OR OTHER	WESTWARD MAINLINE CWT	EASTWARD MAINLINE CWT
STANDARD MINIMUM WARNING TIME	25	25
ROADWAY GATE TIME	5	5
CLEARANCE TIME	1	1
DOT TRAFFIC LIGHT SIMULTANEOUS PREEMPT TIME ✳	0	0
DESIGNED WARNING TIME FOR TRAINS AT TIME TABLE SPEED	31	31
DOT TRAFFIC LIGHT ADVANCE PREEMPT TIME ✳	0	0
CONTROL EQUIPMENT DECISION TIME	4	4
DESIGNED DETECTION TIME FOR TRAINS AT TIME TABLE SPEED	35	35
TIME TABLE MAXIMUM TRAIN SPEED IN MILES PER HOUR	30	30
BUFFER SPEED IN MILES PER HOUR	5	5
TOTAL WARNING SYSTEM DESIGN SPEED	35	35
APPROACH DISTANCE TO ISLAND EDGE IN FEET	1760	1760
HALF WIDTH OF ISLAND IN FEET	62	62
APPROXIMATE MILE POSTS FOR APPROACH CIRCUIT	270.27	269.59

✳AUTHORIZING AGENCY: NONE
✳DATE OF REQUIREMENT: NONE
✳AMOUNT OF TIME (SEC.): NONE

NOTES:
1. WARNING DEVICES ACTIVATED BY GCP-3000ND2.
2. O.H. POWER LINES IN SE QUAD NEED TO BE RAISED OR RELOCATED.
3. BACK TO BACK SIDE LIGHTS ON THE GATE IN THE SW QUAD FOR US-36.
4. BOTH GATES WILL NEED SAFETY PLATFORMS.

FILE NAME: BD26993.H01	REVISION DATES	PRODUCED FOR:	PRODUCED BY:	LEGEND	GUARD RAIL	METER SERVICE ⊗	STREET NAME: PRAIRIE VIEW RD.	
DATE DRAWN: 05/08/2013	05-24-2013 GRN	CSX TRANSPORTATION	invensys Rail	CSX ROW	O.H. POWER	POLE Ⓟ	CITY & STATE: DECATUR, IL	
DRAWN BY: NOVINSKI, GREG	- -	RAIL TRANSPORT GROUP ENGINEERING	7775 BAYMEADOWS WAY	R/R POLELINE	FENCE	FIRE PLUG Ⓕ	PROJECT #: IL2013017	PROPOSED CROSSING LAYOUT
CHECKED BY: WILTSIE, JOE	- -	COMMUNICATIONS AND SIGNALS	SUITE 250	GAS	WATER	SEWER CAP Ⓢ	OP #: IL0395	1"=20'
SSC #: JXXD03666	- -		JACKSONVILLE, FL 32256	FIBER OPTIC	SEWER	GAS VENT Ⓥ	DOT #: 154628U	

INDEX

CONTENTS

SH. NO.		REVISION NO. 1	2	3	4	5	6	7	8	9
I01	INDEX AND REVISIONS									
S01	TRACK AND SIGNAL PLAN									
E01	POWER DISTRIBUTION									
C01	CROSSING DETECTION CIRCUITRY									
C02	DETECTION DEVICE PROGRAM									
C03	CROSSING WARNING DEVICE GATE CIRCUITRY									
C04	CROSSING WARNING DEVICE LIGHT CIRCUITRY									
C05	SEAR II CIRCUITS									
C06	SEAR II CONFIGURATION AND FUNCTIONS									
C07	SEAR II CHANNELS									
C08	WAYSIDE ACCESS GATEWAY									

= DESIGN COMPLETED

= REVISION COMPLETED

REVISIONS

REV. NO.	PROJECT NO.	DESIGN DATE	IN SERVICE DATE	REVISION DATE
1	IL2013017	05-17-13		

TO BE COMPLETED ON A.I.S.

NEW WORK

invensys Rail

PROJ #: IL2013017
DES BY: P. NISTICO
CHK BY: D. ALBRIGHT
DATE: 05-17-13

= NOTE

3000ND2WSR.I01
REV. 03-29-13

CSX TRANSPORTATION

RAIL TRANSPORT GROUP ENGINEERING
COMMUNICATIONS AND SIGNALS

C.R. 2100E (PRAIRIE VIEW RD) 154628U

INDEX AND REVISIONS
DECATUR, IL M.P. BD-269.93

DESIGNED	DIGITIZED	CHECKED	DATE
IRC/PLN	IRC/PLN	IRC/DBA	05-17-13

DESIGN DATE	REV. NO.	DRAWING	SHEET NO	FILE	SHEET
05-17-13	1	-----	-----	BD26993	I01

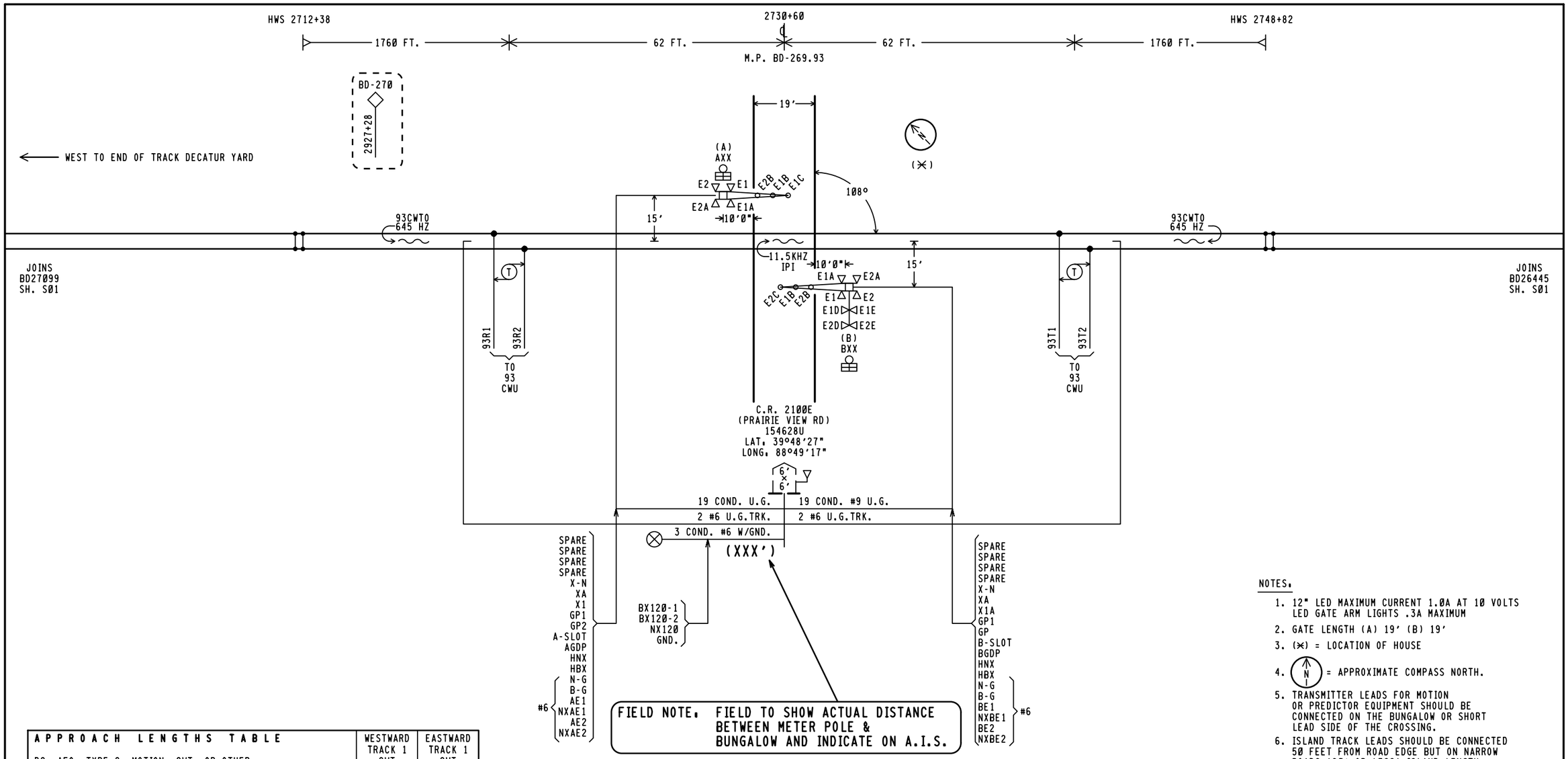

NOTES.

1. 12" LED MAXIMUM CURRENT 1.0A AT 10 VOLTS LED GATE ARM LIGHTS .3A MAXIMUM
2. GATE LENGTH (A) 19' (B) 19'
3. (✳) = LOCATION OF HOUSE
4. (N) = APPROXIMATE COMPASS NORTH.
5. TRANSMITTER LEADS FOR MOTION OR PREDICTOR EQUIPMENT SHOULD BE CONNECTED ON THE BUNGALOW OR SHORT LEAD SIDE OF THE CROSSING.
6. ISLAND TRACK LEADS SHOULD BE CONNECTED 50 FEET FROM ROAD EDGE BUT ON NARROW ROADS (20' OR LESS) ISLAND LENGTH SHALL BE 120 FEET.
7. WARNING SYSTEM APPROACH CIRCUIT DISTANCES ARE TO BE MEASURED FROM THE ISLAND TRACK CONNECTIONS.

APPROACH LENGTHS TABLE DC, AFO, TYPE C, MOTION, CWT, OR OTHER	WESTWARD TRACK 1 CWT	EASTWARD TRACK 1 CWT
STANDARD MINIMUM WARNING TIME IN SECONDS	25	25
ROADWAY GATE TIME IN SECONDS	5	5
CLEARANCE TIME IN SECONDS	1	1
DOT TRAFFIC LIGHT SIMULTANEOUS PREEMPT TIME IN SECONDS✳	0	0
DESIGNED WARNING TIME FOR TRAINS AT TIME TABLE SPEED	31 SEC.	31 SEC.
DOT TRAFFIC LIGHT ADVANCE PREEMPT TIME IN SECONDS ✳	0	0
CONTROL EQUIPMENT DECISION TIME IN SECONDS	4	4
DESIGNED DETECTION TIME FOR TRAINS AT TIME TABLE SPEED	40 SEC.	40 SEC.
TIME TABLE MAXIMUM TRAIN SPEED IN MILES PER HOUR	30	30
BUFFER SPEED IN MILES PER HOUR	5	5
TOTAL WARNING SYSTEM DESIGN SPEED IN MILES PER HOUR	35	35
APPROACH DISTANCE TO ISLAND EDGE IN FEET	1760	1760
HALF WIDTH OF ISLAND IN FEET	62	62
APPROXIMATE MILE POSTS FOR APPROACH CIRCUIT	270.27	269.59

✳AUTHORIZING AGENCY. "NONE"
✳DATE OF REQUIREMENT. "NONE"
✳AMOUNT OF TIME (SEC.). "NONE"

NEW WORK EXCEPT
(- - -) = EXISTING

invensys Rail

PROJ #. IL2013017
DES BY. P. NISTICO
CHK BY. D. ALBRIGHT
DATE. 05-17-13

( ) = NOTE

3000ND2WSR.S01
REV. 03-27-13

CSX TRANSPORTATION
RAIL TRANSPORT GROUP ENGINEERING
COMMUNICATIONS AND SIGNALS

C.R. 2100E (PRAIRIE VIEW RD) 154628U

TRACK AND SIGNAL PLAN
DECATUR, IL M.P. BD-269.93

DESIGNED	DIGITIZED	CHECKED	DATE
IRC/PLN	IRC/PLN	IRC/DBA	05-17-13

DESIGN DATE	REV. NO.	DRAWING	SHEET NO	FILE	SHEET
05-17-13	1	-----	-----	BD26993	S01

TOP ROW

XR			XPR			GPR			EOR			POR			ACR		
12	FB	B8	22	F	B36	12	B	B82	12	FB	B81	12	FB	B62	12	B	B77
15	FB	C30	25	F	C30	15	B	C30	15	FB	C30	15	FB	C30	15	B	C30
22						22			32	FB		22	FB		22		
23						25			35	FB		25	FB		25		
25	F					32	F					32	F		32	B	
32						35	B					35			35	B	

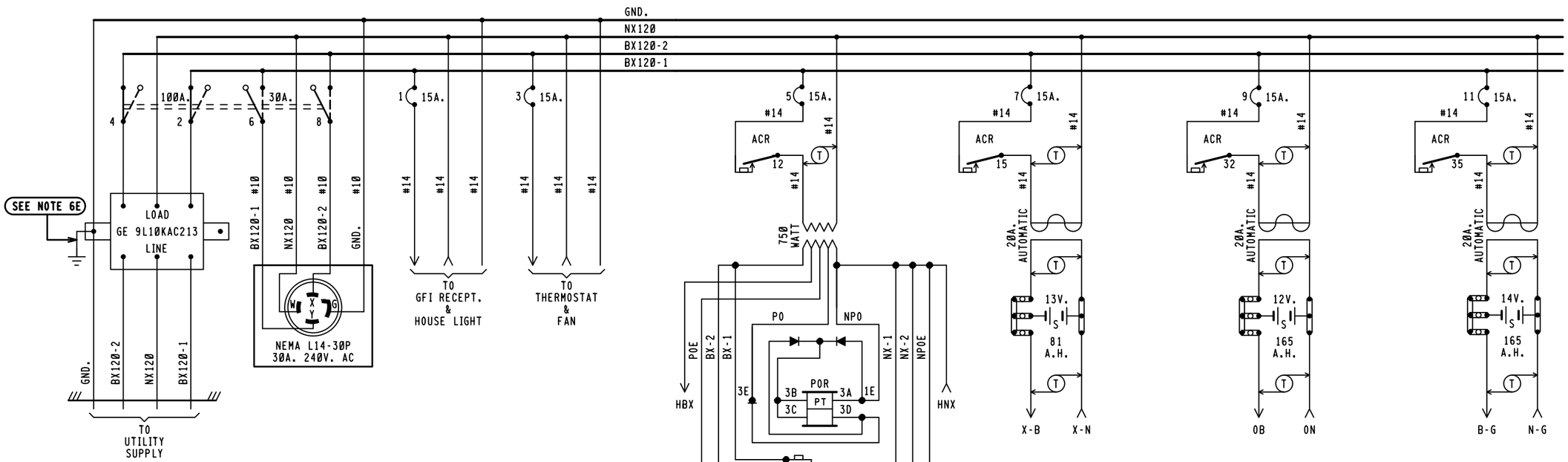

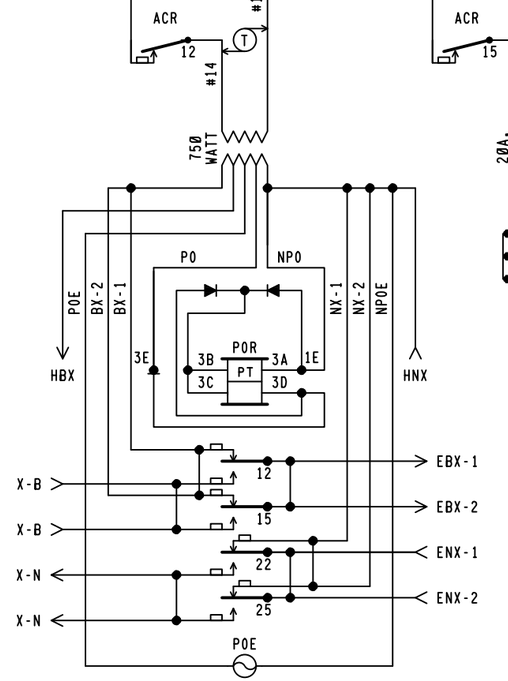

BX120-1	BX120-2
14.25 AMPS	14.0 AMPS

MAXIMUM LOAD
CALCULATED PER SS360

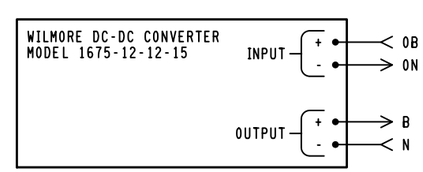

NOTES:

1 - REFERENCES ARE PER SCMS-13.
2 - ARRESTERS ARE PER SS382.
3 - SHELF RELAY PLACEMENT ON CONSIST CHART HAS NO SIGNIFICANCE.
4 - PLUG-IN RELAYS ARE VIEWED FROM THE FRONT OF RACK.
5 - BATTERY A.H. CAPACITY SHOWN IS THE MINIMUM REQUIREMENT.
6 - WIRING
  A - FEED TO ALL BUSSES, LIGHT CIRCUITS,MOTOR CIRCUITS TO BE #10 FLEX.
  B - 120-VOLT FEED FROM ENTRANCE TO POWER BUSS TO BE #10 FLEX.
  C - ALL TRACK WIRES TO BE #10 FLEX.
  D - ALL OTHERS TO BE #16 FLEX UNLESS NOTED.
  E - GROUND WIRE NOT NECESSARY WHEN GE ARRESTER IS MOUNTED ON GROUND PLANE OR METAL ENCLOSURE AFFIXED DIRECTLY TO BUNGALOW METALLIC STRUCTURAL MEMBER.
7 - CIRCUIT INTERRUPTERS 2 & 4 ARE MECHANICALLY INTERLOCKED WITH CIRCUIT INTERRUPTERS 6 & 8.

NEW WORK

invensys Rail

PROJ #: IL2013017
DES BY: P. NISTICO
CHK BY: D. ALBRIGHT
DATE: 05-17-13

6'X 6' RELAY HOUSE W/FARADAY SHIELD

CSX TRANSPORTATION
RAIL TRANSPORT GROUP ENGINEERING
COMMUNICATIONS AND SIGNALS

C.R. 2100E (PRAIRIE VIEW RD) 154628U

POWER DISTRIBUTION
DECATUR, IL M.P. BD-269.93

= NOTE

3000ND2WSR.E01
REV. 03-29-13

DESIGNED	DIGITIZED	CHECKED	DATE
IRC/PLN	IRC/PLN	IRC/DBA	05-17-13

DESIGN DATE	REV. NO.	DRAWING	SHEET NO	FILE	SHEET
05-17-13	1	-----	-----	BD26993	E01

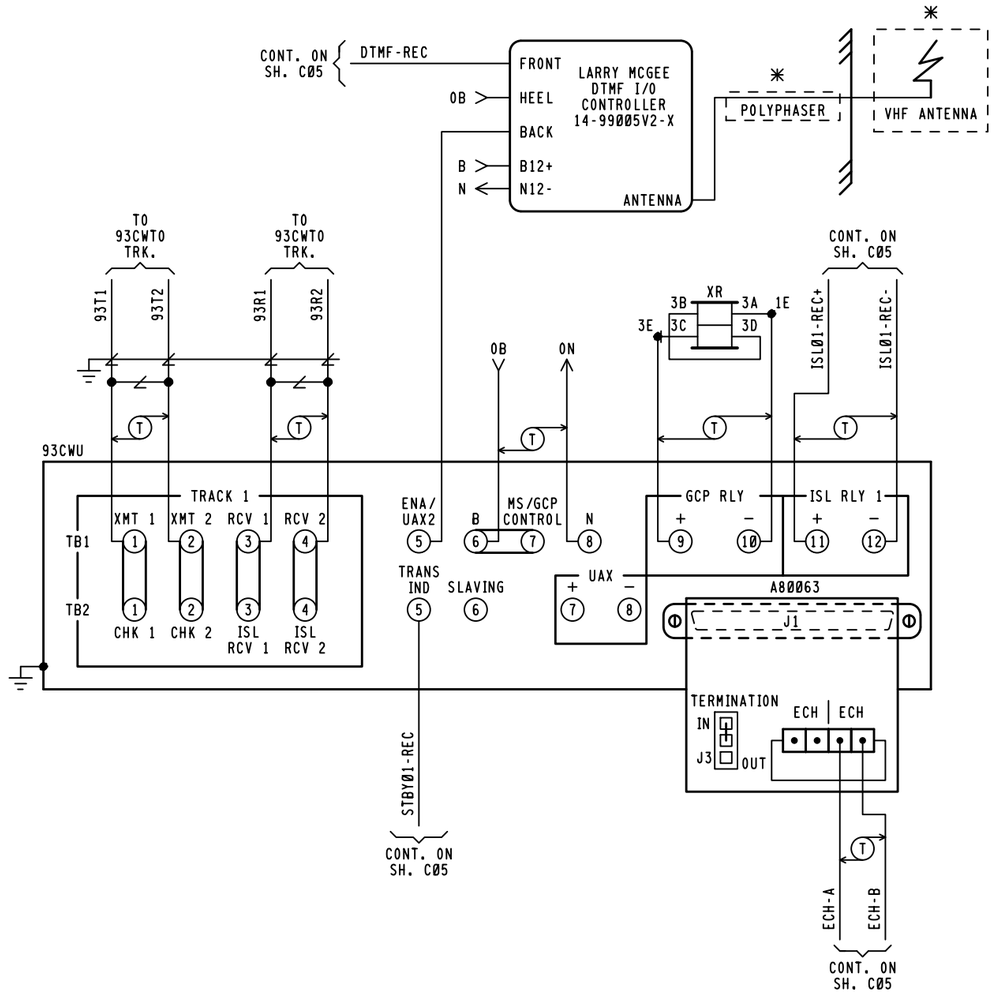

93CWU
3000ND2 MODULES REQUIRED

M1	M2	M3	M4	M5	M6	M7	M8	M9	M10	M11	M12
80211 IPI ISLAND (11.5KHZ)	80012 TRANSCEIVER	80013 RELAY DRIVE	80214 PROCESSOR	80255 RECORDER INTERFACE (NOTE 1)	80029 CONTROL INTERFACE	80255 RECORDER INTERFACE (NOTE 1)	80214 PROCESSOR	80013 RELAY DRIVE	80012 TRANSCEIVER	80211 IPI ISLAND (11.5KHZ)	80028 TRANSFER TIMER

FRONT VIEW

80153 PRINTED CIRCUIT BOARD
LOCATED IN SLOT M6 BEHIND 80029

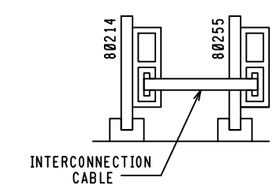

NOTES:

1. INTERCONNECTION CABLE MUST BE INSTALLED BETWEEN 80214 AND 80255 MODULES.

✳ = COMMUNICATIONS TO SUPPLY

PROGRAMMING FOR DTMF RADIO

REMOTE DTMF CROSSING ACTIVATION (ACTIVATES ENTIRE CROSSING)	
TO ACTIVATE PRESS:	628#
TO DE-ACTIVATE PRESS:	628*
(ACTIVATION WILL TIME OUT AFTER 60 SEC.)	

MODULE A80063
NETWORK INTERFACE CONNECTOR

(J1)	(J3 JUMPER)	
ECH1	IN	TERMINATION
ECH2	OUT	ADD NODES

IPI
MODULE 80211

SLOT M1 & M11
11.5KHZ

PLACE SHORTING BLOCK ACROSS
11.5KHZ PIN PAIRS

MODULE 80028
S4 DIP SWITCH POSITIONS ✳

SWITCH #	16	8	4	2	1
SWITCH POSITION	UP	DOWN	UP	DOWN	UP

✳MAY BE SET PER FIELD CONDITIONS

MODULE 80028
S1 DIP SWITCH POSITIONS

SWITCH #	A	B	C	D
DAX USED	RIGHT	RIGHT	RIGHT	RIGHT

LEFT INDICATES DAX USED

SWITCH TO REMAIN IN
THE RIGHT POSITION
AT ALL TIMES

NEW WORK

invensys Rail

PROJ #: IL2013017
DES BY: P. NISTICO
CHK BY: D. ALBRIGHT
DATE: 05-17-13

CSX TRANSPORTATION
RAIL TRANSPORT GROUP ENGINEERING
COMMUNICATIONS AND SIGNALS

C.R. 2100E (PRAIRIE VIEW RD) 154628U

CROSSING DETECTION CIRCUITRY
DECATUR, IL M.P. BD-269.93

3000ND2WSR.C01
REV. 03-29-13

DESIGNED	DIGITIZED	CHECKED	DATE
IRC/PLN	IRC/PLN	IRC/DBA	05-17-13

DESIGN DATE	REV. NO.	DRAWING	SHEET NO	FILE	SHEET
05-17-13	1	-----	-----	BD26993	C01

3000 GCP APPLICATION DESIGN CARD

EQUIPMENT: 3000 ☐ 3000ND ☐ 3000D2 ☐ 3000ND2 ■

ISLAND FREQUENCY: T1: 11.5 KHZ T2: N/A KHZ 93 CWU

SOFTWARE LEVEL (DISPLAYED DURING BOOT-UP)		☆☆	
NUMBER OF TRACKS (NUMBER OF TRANSCEIVER MODULES, 1 OR 2)		1 ■	2 ☐
FREQUENCY (MS/GCP)	T1:	645	HZ
	T2:	N/A	HZ
UNIDIRECTIONAL / BIDIRECTIONAL	T1:	UNI ☐	BI ■
	T2:	UNI ☐	BI ☐
XMIT LEVEL	T1:	HI ☐	MED ■
	T2:	HI ☐	MED ☐
PREDICTOR/MOTION SENSOR	T1:	PRED ■	MS ☐
	T2:	PRED ☐	MS ☐
WARNING TIME SELECTED	T1:	31	SEC.
	T2:	N/A	SEC.
APPROACH DISTANCE SELECTED	T1:	1760	FT.
	T2:	N/A	FT.
APPROACH DISTANCE COMPUTED	T1:	NOT REQUIRED *	
	T2:	NOT REQUIRED *	
UAX PICKUP DELAY (UAX1) (0 = OFF)		0	SEC.
ENA/UAX2 DELAY (0 = ENA)		0	SEC.
ISLAND DISTANCE (BETWEEN FEED WIRES)	T1:	125' OR ☆	FT.
	T2:		FT.
NUMBER OF DAX'S		0 ■ 1 ☐ 2 ☐ 3 ☐ 4 ☐	
DAX A TRACK ASSIGNMENT		T1 ☐	T2 ☐
DAX A DISTANCE (0 = PREEMPT)			FT.
DAX A WARNING TIME			SEC.
DAX B TRACK ASSIGNMENT		T1 ☐	T2 ☐
DAX B DISTANCE (0 = PREEMPT)			FT.
DAX B WARNING TIME			SEC.
DAX C TRACK ASSIGNMENT		T1 ☐	T2 ☐
DAX C DISTANCE (0 = PREEMPT)			FT.
DAX C WARNING TIME			SEC.
DAX D TRACK ASSIGNMENT		T1 ☐	T2 ☐
DAX D DISTANCE (0 = PREEMPT)			FT.
DAX D WARNING TIME			SEC.
SLAVING MASTER/SLAVE		MASTER ■	SLAVE ☐
PASSWORD ENABLED		DISABLED ■	ENABLED ☐
RECORDER INSTALLED		NOT INSTALLED ■	INSTALLED ☐
RS-232-C BAUD RATE			BPS
RS-232-C DATE BITES		7 ☐	8 ☐
RS-232-C STOP BITS		1 ☐	2 ☐
RS-232-C PARITY		NONE ☐	MARK ☐
		ODD ☐ EVEN ☐	SPACE ☐
DATE (E.G., MON 13 MAY 1991)		NOT REQUIRED *	
TIME (E.G., 06:25:43 PM)		NOT REQUIRED *	
DAYLIGHT SAVINGS		ON ■	OFF ☐

EXPANDED PROGRAMMING DESIGN

SWITCH TO MS (ENTER EZ VALUE)	T1:	10	EZ
	T2:	N/A	EZ
TRANSFER DELAY MS TO GCP (0 = OFF)	T1:	0	SEC.
	T2:	N/A	SEC.
PRIME PREDICTION OFFSET (0 = OFF)	T1:	0	FT.
	T2:	N/A	FT.
PICKUP DELAY PRIME		15	SEC.
PICKUP DELAY DAX A		0	SEC.
PICKUP DELAY DAX B		0	SEC.
PICKUP DELAY DAX C		0	SEC.
PICKUP DELAY DAX D		0	SEC.
COMPENSATION VALUE	T1:	NOT REQUIRED **	
COMPENSATION VALUE	T2:	NOT REQUIRED **	
ENHANCED DETECTION (ED)	T1:	ON ☐	OFF ■
	T2:	ON ☐	OFF ■
BACK TO BACK T1 AND T2 (WHEN ED IS ON)		NO ■	YES ☐
STATION STOP TIMER (WHEN ED IS ON)	T1:	N/A (SEE NOTE1)	SEC.
	T2:	N/A	SEC.
# OF TRACK WIRES - 4 OR 6	T1:	4 ■	6 ☐
	T2:	4 ☐	6 ☐
LOW EX ADJUSTMENT	T1:	0	
	T2:	N/A	
LOW EZ DETECTION	T1:	ON ☐	OFF ■
	T2:	ON ☐	OFF ☐
LOW EZ DETECTION TIMER	T1:	N/A (SEE NOTE2)	MIN.
	T2:	N/A	MIN.
POSITIVE START (0 = OFF) (ENTER EZ VALUE)	T1:	0	EZ
	T2:	N/A	EZ
POSITIVE START TIMEOUT (0 = NONE) (WHEN POTISIVE START IS ON)	T1:	0	MIN.
	T2:	N/A	MIN.
SET AT OPERATION		NORMAL ■	DIAGNOSTIC ☐
DIAGNOSTIC MESSAGES		ON ■	OFF ☐
DAX MESSAGES (SEE NOTE 3)		ON ☐	OFF ■
ADVANCE PREEMP TIMER (0 = OFF)		0	SEC.

** THE COMPENSATION VALUE IS PROVIDED BY THE 3000 GCP SYSTEM AND NO ADDITIONAL PROGRAMMING IS NORMALLY REQUIRED.

* PROGRAMMED AT INSTALLATION DURING CALIBRATION PROCEDURE

☆ = 120' MINIMUM ISLAND DISTANCE TO BE ENTERED BY FIELD PERSONNEL FOR NON-DAXING APPLICATIONS WHEN ROAD IS 20' OR LESS WIDE.

☆☆ = INDICATE ON AS-IN-SERVICE DRAWINGS

NOTES:

1. WHEN ED SET TO OFF, DEFAULT NOT DISPLAYED
   WHEN ED SET TO ON, DEFAULT IS 10 SEC.
2. WHEN LOW EZ DETECTION SET TO OFF, DEFAULT NOT DISPLAYED
   WHEN LOW EZ DETECTION SET TO ON, DEFAULT IS 10 MIN.
3. WHEN A 3000D2 WITH DAX, SET DAX MESSAGES ON.
4. NODES ARE ASSIGNED BY SEAR II UNIT PER TABLE.

NEW WORK

invensys Rail

PROJ #: IL2013017
DES BY: P. NISTICO
CHK BY: D. ALBRIGHT
DATE: 05-17-13

CSX TRANSPORTATION
RAIL TRANSPORT GROUP ENGINEERING
COMMUNICATIONS AND SIGNALS

C.R. 2100E (PRAIRIE VIEW RD) 154628U

DETECTION DEVICE PROGRAM
DECATUR, IL M.P. BD-269.93

3000ND2WSR.C02
REV. 03-29-13

DESIGNED	DIGITIZED	CHECKED	DATE
IRC/PLN	IRC/PLN	IRC/DBA	05-17-13

DESIGN DATE	REV. NO.	DRAWING	SHEET NO	FILE	SHEET
05-17-13	1	-----	-----	BD26993	C02

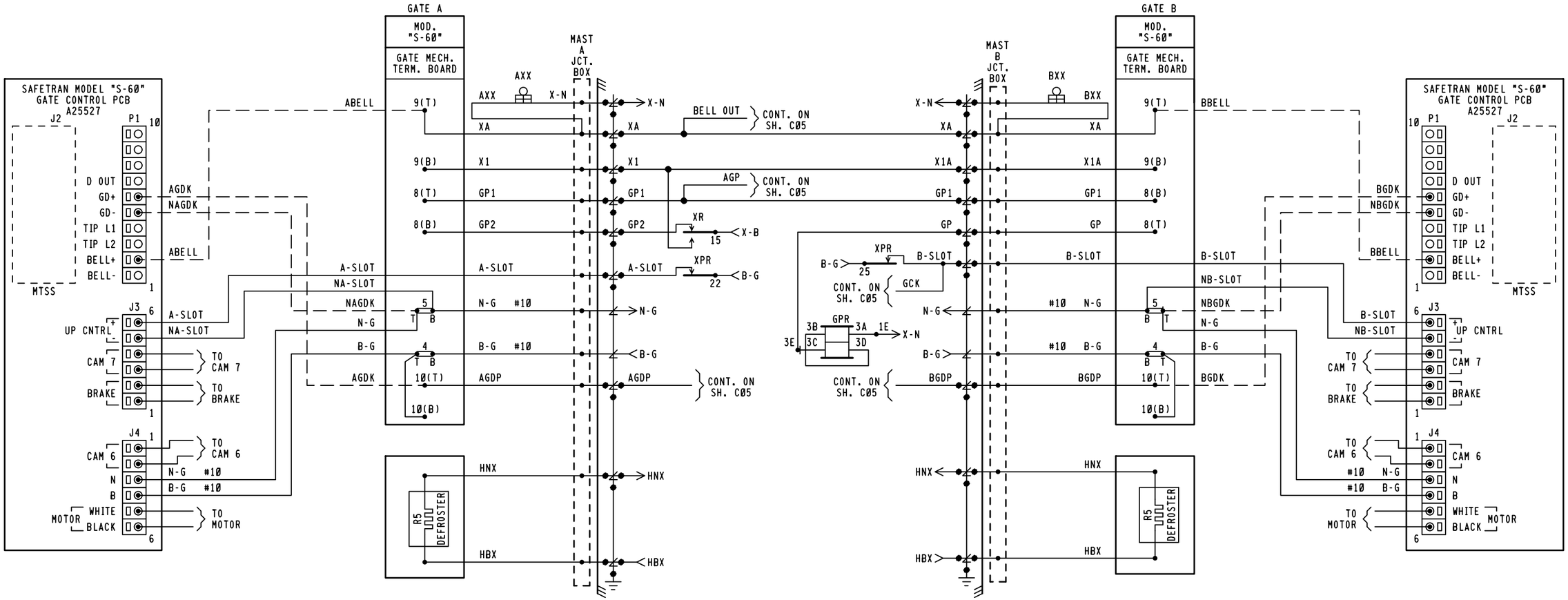

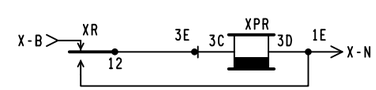

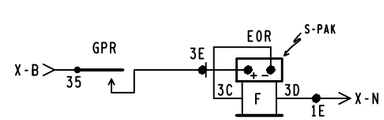

NEW WORK

invensys Rail

PROJ #: IL2013017
DES BY: P. NISTICO
CHK BY: D. ALBRIGHT
DATE: 05-17-13

CSX TRANSPORTATION
RAIL TRANSPORT GROUP ENGINEERING
COMMUNICATIONS AND SIGNALS

C.R. 2100E (PRAIRIE VIEW RD) 154628U

CROSSING WARNING DEVICE GATE CIRCUITRY
DECATUR, IL M.P. BD-269.93

3000ND2WSR.C03
REV. 03-29-13

DESIGNED	DIGITIZED	CHECKED	DATE
IRC/PLN	IRC/PLN	IRC/DBA	05-17-13

DESIGN DATE	REV. NO.	DRAWING	SHEET NO	FILE	SHEET
05-17-13	1	-----	-----	BD26993	C03

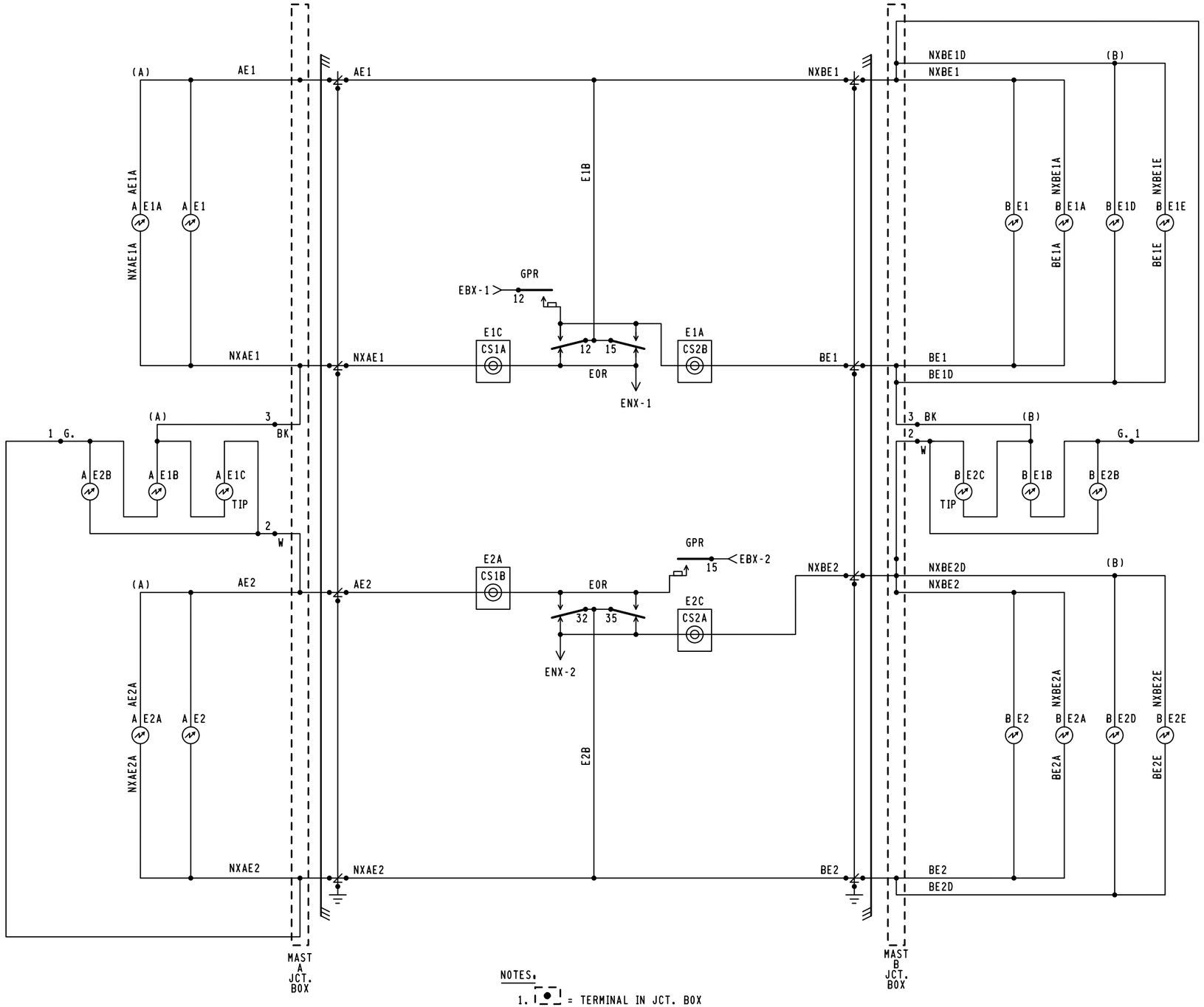

NOTES:

1. = TERMINAL IN JCT. BOX

NEW WORK

invensys Rail

PROJ #: IL2013017
DES BY: P. NISTICO
CHK BY: D. ALBRIGHT
DATE: 05-17-13

CSX TRANSPORTATION

RAIL TRANSPORT GROUP ENGINEERING
COMMUNICATIONS AND SIGNALS

C.R. 2100E (PRAIRIE VIEW RD) 154628U

CROSSING WARNING DEVICE LIGHT CIRCUITRY
DECATUR, IL M.P. BD-269.93

3000ND2WSR.C04
REV. 03-29-13

DESIGNED	DIGITIZED	CHECKED	DATE
IRC/PLN	IRC/PLN	IRC/DBA	05-17-13

DESIGN DATE	REV. NO.	DRAWING	SHEET NO	FILE	SHEET
05-17-13	1	-----	-----	BD26993	C04

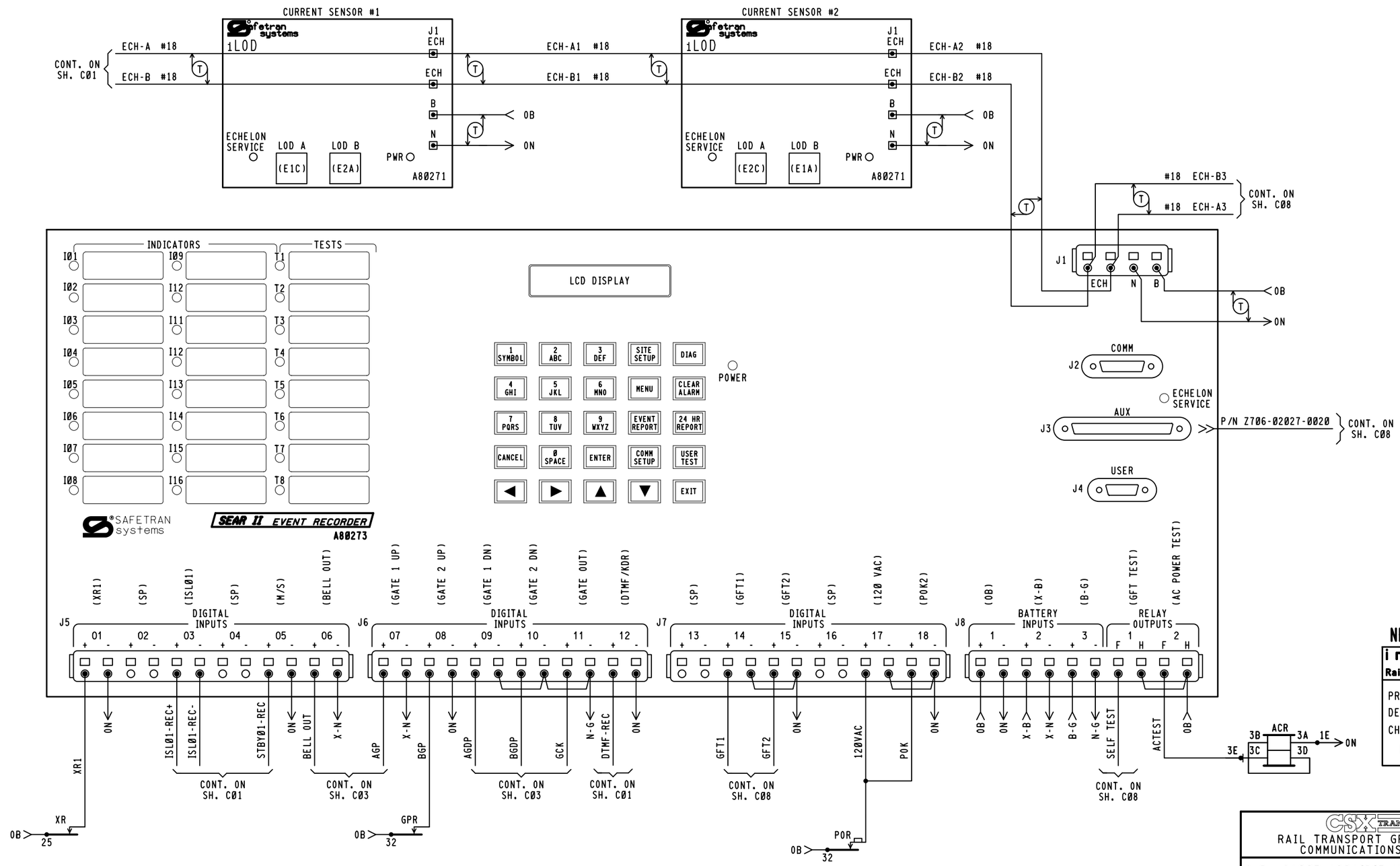

NEW WORK

invensys Rail

PROJ #. IL2013017
DES BY. P. NISTICO
CHK BY. D. ALBRIGHT
DATE. 05-17-13

CSX TRANSPORTATION
RAIL TRANSPORT GROUP ENGINEERING
COMMUNICATIONS AND SIGNALS

C.R. 2100E (PRAIRIE VIEW RD) 154628U

SEAR II CIRCUITS
DECATUR, IL M.P. BD-269.93

3000ND2WSR.C05
REV. 03-29-13

DESIGNED	DIGITIZED	CHECKED	DATE
IRC/PLN	IRC/PLN	IRC/DBA	05-17-13

DESIGN DATE	REV. NO.	DRAWING	SHEET NO	FILE	SHEET
05-17-13	1	-----	-----	BD26993	C05

	DEFAULTS AND/OR STYLE	FIELD RECORD
SEAR II EXECUTIVE PROGRAM	VERSION: 9V645A01Y	VERSION:
APPLICATION PROGRAM (IF LOADED)	VERSION: 9VC39	VERSION: A01A

SITE SET UP OPTIONS		
OPTION	SELECTION	
DATE	XX-XX-XXXX	
TIME	[XX:XX:XX]	
DAYLIGHT SAVINGS TIME	YES ■ NO ☐	
TIME ZONE	■ EST ☐ CST	
SITE NAME	PRAIRIE VIEW RD	
MILEPOST	BD-269.93	
DOT NUMBER	154628U	
TESTER TYPE	■ CROSSING ☐ WAYSIDE	
DATE FORMAT	■ MM-DD-YYYY ☐ DD-MM-YYYY	
TEMP FORMAT	■ FAHRENHEIT ☐ CELSIUS	
INDICATE HOLDOFF	0	
INDICATE REFRESH	60	
SITE TYPE	☐ NO COMMUNICATION ☐ DIAL-UP ■ COLLECTOR ☐ NODE ☐ BULLHORN/MODE ☐ CDS902X	
SITE ATCS ADDRESS	7.125.472.004.99.02 (7.RRR.LLL.GGG.99.01)	NOTE 4
OFFICE ADDRESS	2.125.00.0000 (2.RRR.NN.DDDD)	
OFFICE SITE ADDRESS	NA	NOTE 5
BACK UP SITE ADDRESS 1	NA	NOTE 5
BACK UP SITE ADDRESS 2	NA	NOTE 5
POLL ID (1-99)	1	NOTE 5
GEN/ATCS MODE	☐ GENISYS ■ GEN/ATCS	NOTE 5
XID DISABLED	■ YES ☐ NO	NOTE 5
OFFICE COM. DEVICE	☐ DIRECT ☐ MCM (RS232) ☐ MCM (ECH) ■ WAG (ECHELON) ☐ DIAL UP (RS232) ☐ S200 RADIO (RS422)	NOTE 5
RADIO ATCS ADDRESS	7.125.472.004.99.02	NOTE 5
OFFICE PHONE NUMBER	1-XXX-XXX-XXXX	NOTE 5
INIT. STRING		NOTE 5
FIELD COMM	☐ VHF (ECH) ☐ VHF (RS232) ☐ WAG (ECH) ☐ SS (RS232) ■ NONE	NOTE 5
USER PORT	BAUD RATE (9600)	NOTE 6
AUX PORT	BAUD RATE (9600)	NOTE 6
COMM PORT	BAUD RATE (9600)	NOTE 6

SITE SET UP OPTIONS CONT.		
	OPTION	SELECTION
	RAILROAD NUMBER	125
NOTE 1	CROSSING CONFIGURATION	STANDARD ■ LARGE ☐ REMOTE ☐ SPLIT GATE ☐ ISL ONLY ☐ CP COLLECTOR ☐
	NUMBER OF XR INPUTS	0 ☐ 1 ■ 2 ☐ 3 ☐ 4 ☐
	NUMBER OF ISL INPUTS	0 ☐ 1 ■ 2 ☐ 3 ☐ 4 ☐
	CONSTANT WARNING DEVICE	GCP ■ OTHER ☐ NONE ☐
	TOTAL NUMBER OF GCP NODES	1 ■ 2 ☐ 3 ☐ 4 ☐ 5 ☐
	NUMBER OF REDUNDANT GCP	1 ■ 2 ☐ 3 ☐ 4 ☐
	CROSSING CONTROLLER 1	SSCC IIIA / PLUS ☐ SSCC IV ☐ OTHER ☐ NONE ■
	POK2	YES ■ NO ☐
NOTE 2	MAIN / STANDBY	YES ■ NO ☐
	AUXILIARY TRACKS	0 ■ 1 ☐ 2 ☐
	ENTRANCE GATE	0 ☐ 1 ☐ 2 ■ 3 ☐ 4 ☐ 5 ☐ 6 ☐ 7 ☐ 8 ☐
	GATE POSITION FAIL 10-60 SEC	25
	NUMBER OF UAX INPUTS	0 ■ 1 ☐ 2 ☐
	BATTERY BANKS	1 ☐ 2 ☐ 3 ■ 4 ☐ 5 ☐ 6 ☐
	OB RESOLUTION	.2 ■ .5 ☐ 1.0 ☐
	X-B RESOLUTION	.2 ■ .5 ☐ 1.0 ☐ NOT PRESENT ☐
	B-G RESOLUTION	.2 ☐ .5 ☐ 1.0 ■ NOT PRESENT ☐
	X-B2 RESOLUTION	.2 ☐ .5 ☐ 1.0 ☐ NOT PRESENT ■
	B-G2 RESOLUTION	.2 ☐ .5 ☐ 1.0 ☐ NOT PRESENT ■
	X-B3 RESOLUTION	.2 ☐ .5 ☐ 1.0 ☐ NOT PRESENT ■
	PREEMPTION	NORMAL ☐ ADVANCED ☐ NO ■
	KDR INPUT	YES ■ NO ☐
NOTE 3	VHF COMMUNICATOR	YES ☐ NO ■
	ACTIVATION TIMEOUT (30 TO 600 SECONDS)	60
	iLOD MODULES	0 ☐ 1 ☐ 2 ■ 3 ☐ 4 ☐ 5 ☐ 6 ☐
	ANY LED BULBS	NO ☐ YES ■
	AUTO INSPECTIONS	YES ■ NO ☐
	BELL ON	GATES LOWERING ■ GATES MOVING ☐ ALWAYS ☐
	GROUND FAULT DETECTORS	YES ■ NO ☐
	BATTERIES ON GFT1	1 ☐ 2 ■
	FULL APPROACH MOVE ALARMS	ACTIVATED ■ DO NOT ACTIVATE ☐

NOTES:

1. LARGE CONFIGURATION ASSIGNS RECORDER INPUTS FOR USE WHEN DIGITAL I/O MODULE REQUIRED.
2. IF WARNING DEVICE = NONE MAIN/STANDBY OPTION NOT SHOWN.
3. IF VHF COMMUNICATIONS = NO THEN DTMF ACTIVATION AND CHANNEL OPTIONS ARE NOT SHOWN.
4. DEFAULT ADDRESS 7.620.100.100.99.01 USED FOR STAND ALONE LOCATIONS.
5. OPTIONS NOT SHOWN IF SITE TYPE = NO COMMUNICATIONS.
6. FORMAT AS: BAUD, DATA BITS, PARITY STOP BITS, FLOW CONTROL.

NEW WORK

invensys Rail

PROJ #: IL2013017
DES BY: P. NISTICO
CHK BY: D. ALBRIGHT
DATE: 05-17-13

LIT BULB COUNT ON EACH CIRCUIT	NO.	TYPE OF BULB	CURRENT READING IN AMP. AT APPROX. 10.0 V BULB VOLTAGE
CURRENT SENSOR (1) E1C: LAMP SET UP	1A	☐BULBS ■LED	2.6
CURRENT SENSOR (1) E2A: LAMP SET UP	1B	☐BULBS ■LED	2.6
CURRENT SENSOR (2) E2C: LAMP SET UP	2A	☐BULBS ■LED	4.6
CURRENT SENSOR (2) E1A: LAMP SET UP	2B	☐BULBS ■LED	4.6

MEASURE BATTERY VOLTAGE AT INPUT	
BATTERY VOLTAGE OB	XXXX VOLTS
BATTERY VOLTAGE X-B	XXXX VOLTS
BATTERY VOLTAGE B-G	XXXX VOLTS

CSX TRANSPORTATION
RAIL TRANSPORT GROUP ENGINEERING
COMMUNICATIONS AND SIGNALS

C.R. 2100E (PRAIRIE VIEW RD) 154628U

SEAR II CONFIGURATION AND FUNCTIONS
DECATUR, IL M.P. BD-269.93

3000ND2WSR.C06
REV. 03-29-13

DESIGNED	DIGITIZED	CHECKED	DATE
IRC/PLN	IRC/PLN	IRC/DBA	05-17-13

DESIGN DATE	REV. NO.	DRAWING	SHEET NO	FILE	SHEET
05-17-13	1	-----	-----	BD26993	C06

DISCRETE INPUTS	DI 01	DI 02	DI 03	DI 04	DI 05	DI 06
CHANNEL	1	2	3	4	5	6
NAME	XR1		ISLAND 1 (TRACK)		MAIN/STANDBY	BELL OUT (BELL PWR)
TAG	XR1 (XR)	SP	ISL1	SP	M/S	BELL OUT (BELL PWR)
OFF NAME	DOWN (XR)		DOWN (ISL1)		DOWN (STANDBY)	OFF (BELL PWR)
ON NAME	UP (XR)		UP (ISL1)		UP (MAIN)	ON (BELL PWR)
ON DEBOUNCE TIME	100 ms	1000 ms	100 ms	1000 ms	100 ms	100 ms
OFF DEBOUNCE TIME	100 ms	1000 ms	100 ms	1000 ms	100 ms	100 ms
TOGGLE PERIOD	1000 ms	1000 ms	1000 ms	1000 ms	1000 ms	1000 ms

TSS INPUTS	DI 07	DI 08	DI 09	DI 10
CHANNEL	7	8	9	10
NAME	AGP	BGP	AGDP	BGDP
TAG	AGP (GP)	BGP (GP)	AGDP	BGDP
OFF NAME	LIGHTS FLASH	LIGHTS FLASH	NOT HORIZ	NOT HORIZ
ON NAME	GATE VERTICAL	GATE VERTICAL	GATE HORIZ	GATE HORIZ
ON DEBOUNCE TIME	100 ms	100 ms	100 ms	100 ms
OFF DEBOUNCE TIME	100 ms	100 ms	100 ms	100 ms
TOGGLE PERIOD	1000 ms	1000 ms	1000 ms	1000 ms

DISCRETE INPUTS	DI 11	DI 12	DI 13
CHANNEL	11	12	13
NAME	GATE CONTROL	DTMF	
TAG	GCOUT1 (GCK)	DTMF-REC	SP
OFF NAME	OFF (DESCENT)	OFF (NO GATE KEYED)	
ON NAME	ON (ASCENT ON)	ON (ACTIVATE)	
ON DEBOUNCE TIME	100 ms	100 ms	1000 ms
OFF DEBOUNCE TIME	100 ms	100 ms	1000 ms
TOGGLE PERIOD	1000 ms	1000 ms	1000 ms

GFT INPUTS	DI 14	DI 15
CHANNEL	14	15
NAME	GND FAULT TESTER 1 (GFT1,2)	GND FAULT TESTER 2 (GFT3,4)
TAG	GFT1 (GFT1 DATA)	GFT2 (GFT2 DATA)
BATTERY 1 NAME	OB (GND FAULT)	B-G (GND FAULT)
BATTERY 1 TAG	OB (GND FAULT)	B-G (GND FAULT)
BATTERY 2 NAME	X-B (GND FAULT)	SP.
BATTERY 2 TAG	X-B (GND FAULT)	SP.

DISCRETE INPUTS	DI 16	DI 17	DI 18
CHANNEL	16	17	18
NAME		120 VAC	POK2
TAG	SP	120 VAC	POK2
OFF NAME		OFF (ALL POWER OFF)	OFF (ALL POWER OFF)
ON NAME		ON (ALL POWER ON)	ON (ALL POWER ON)
ON DEBOUNCE TIME	1000 ms	100 ms	100 ms
OFF DEBOUNCE TIME	1000 ms	100 ms	100 ms
TOGGLE PERIOD	1000 ms	1000 ms	1000 ms

BATTERY INPUTS	BI1	BI2	BI3
CHANNEL	1	2	3
NAME	OB (ELECTRONIC BATT)	X-B (BULB BATT)	B-G (GATE BATT)
TAG	OB	X-B	B-G
SAMPLE PERIOD (ms)	500 (ms)	500 (ms)	500 (ms)
RESOLUTION (V)	0.2 (VOLTS)	0.2 (VOLTS)	1.0 (VOLTS)
AVGERAGING SAMPLES	32 SAMPLES	32 SAMPLES	32 SAMPLES

RELAYS	R01	R02
CHANNEL	1	2
NAME	GFT TEST	AC POWER TEST (ACRLY)
TAG	SELF TEST	AC POWER TEST (ACRLY)
OFF STATE NAME	NOT TESTING	OFF (ACR DN)
ON STATE NAME	TESTING	ON (ACR UP)
UNKNOWN STATE NAME	PULSE	PULSE
ON PULSE TIME (s)	1 (s)	1 (s)
OFF PULSE TIME (s)	1 (s)	1 (s)
TOGGLE PERIOD (s)	1 (s)	1 (s)
DUTY CYCLE	50	50

NEW WORK

invensys Rail

PROJ #. IL20130 17
DES BY. P. NISTICO
CHK BY. D. ALBRIGHT
DATE. 05-17-13

NOTE. ( ) DENOTES NOMENCLATURE FOR CLARIFICATION AND WILL NOT DISPLAY ON LOG REPORTS.

CSX TRANSPORTATION
RAIL TRANSPORT GROUP ENGINEERING
COMMUNICATIONS AND SIGNALS

C.R. 2100E (PRAIRIE VIEW RD) 154628U

SEAR II CHANNELS
DECATUR, IL M.P. BD-269.93

3000ND2WSR.C07
REV. 03-29-13

DESIGNED	DIGITIZED	CHECKED	DATE
IRC/PLN	IRC/PLN	IRC/DBA	05-17-13

DESIGN DATE	REV. NO.	DRAWING	SHEET NO	FILE	SHEET
05-17-13	1	-----	-----	BD26993	C07

WAYSIDE ACCESS GATEWAY CONFIGURATION	
SITE ATCS ADDRESS	7.125.472.004.01.01 7.125.LLL.GGG.SS.DD
SERIAL INTERFACE	9600,NONE,8,1/NOFLOW
SERIAL FORMAT	RAW
WAG TEST MODE	DISABLED
ECHELON ADDRESS	01.01
UDP PORTS	5000, 5001, 5002, 5003
ROUTE TABLE EXPIRY	5400 SEC
BROADCAST MEDIUM	IP ETHERNET
TCP PORTS	6001
DHCP SERVER	DISABLED
IP ADDRESS	192.168.13.1
TYPE 7 ROUTE LENGTH	12--7RRRLLLGGGSS
IP NETWORK MASK	255.255.255.000

NOTE TO INSPECTOR,
AT INSTALLATION OF CDMA BY COM.
MARK-UP CONFIGURATION TABLE FOR
AS IN SERVICE PLANS

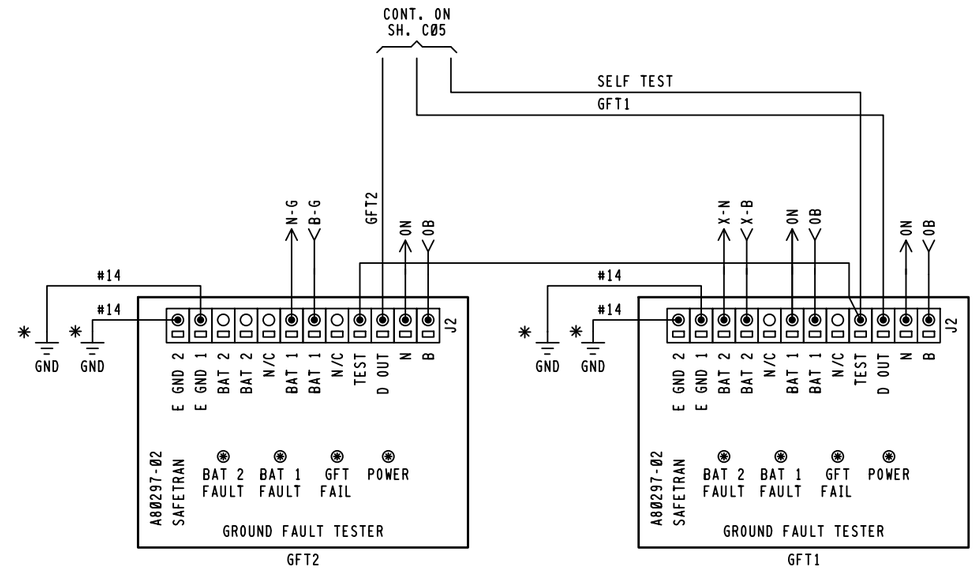

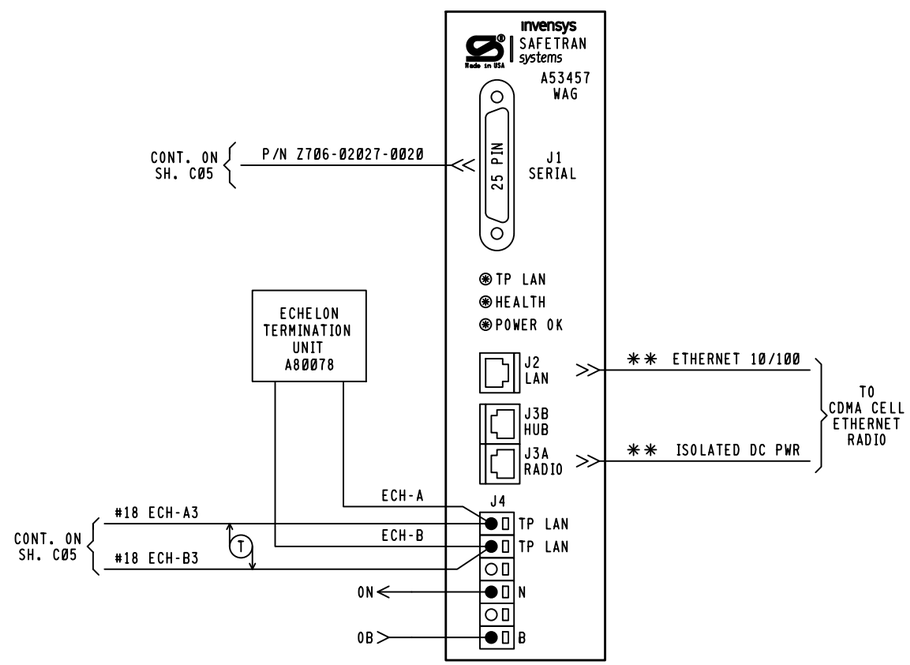

COMM NOTES,

1. WAG J3A PINOUTS,
   4 & 5 = +12VDC RADIO OUT
   7 & 8 = GND RADIO RETURN
2. WAG AND SEARII ECHELON COMM
   THROUGH GCP3000 LONTALK
   PROTOCOL CONNECTION

NOTE,

1. ALL WIRING #16 UNLESS NOTED OTHERWISE.
2. * = EARTH GROUND REF. TERMINALS REQUIRED FOR DETECTION. DO NOT JUMPER TERMINALS. MUST BE CONNECTED TO DIFFERENT POINTS OF BUNGALOW.
3. ** = TO BE PROVIDED BY COMMUNICATIONS

NEW WORK

invensys Rail

PROJ #, IL2013017
DES BY, P. NISTICO
CHK BY, D. ALBRIGHT
DATE, 05-17-13

= NOTE

3000ND2WSR.C08
REV. 03-29-13

CSX TRANSPORTATION
RAIL TRANSPORT GROUP ENGINEERING
COMMUNICATIONS AND SIGNALS

C.R. 2100E (PRAIRIE VIEW RD) 154628U

WAYSIDE ACCESS GATEWAY
DECATUR, IL M.P. BD-269.93

DESIGNED	DIGITIZED	CHECKED	DATE
IRC/PLN	IRC/PLN	IRC/DBA	05-17-13

DESIGN DATE	REV. NO.	DRAWING	SHEET NO	FILE	SHEET
05-17-13	1	-----	-----	BD26993	C08

INDEX

CONTENTS

SH. NO.		REVISION NO. 1	2	3	4	5	6	7	8	9
I01	INDEX AND REVISIONS									
S01	TRACK AND SIGNAL PLAN									
P01	MINIMUM PROGRAM STEPS REPORT CWE-99									
E01	POWER DISTRIBUTION									
C01	DETECTION DEVICE CONSIST CWE-99									
C02	DETECTION CIRCUITRY CWE-99									
C03	DETECTION CIRCUITRY CWE-99									
C04	CROSSING WARNING DEVICE GATE CIRCUITRY									
C05	CROSSING WARNING DEVICE LIGHT CIRCUITRY									
C06	CROSSING WARNING DEVICE CIRCUITRY									
C07	SEAR II1 CONFIGURATION & FUNCTIONS									

= PLANS SENT TO FIELD (DISTRIBUTED)

= PLANS AS-IN-SERVICED (UP TO DATE)

REVISIONS

REV. NO.	PROJECT NO.	DESIGN DATE	IN SERVICE DATE	REVISION DATE
1	IL2008018	06-23-08	05-27-09	07-28-09
2	IL2013017	05-17-13		

TO BE COMPLETED ON A.I.S.

invensys Rail

PROJ #. IL2013017
DES BY. P. NISTICO
CHK BY. D. ALBRIGHT
DATE. 05-17-13

= IN
= OUT
= NOTE

CSX TRANSPORTATION
RAIL TRANSPORT GROUP ENGINEERING
COMMUNICATIONS AND SIGNALS

70TH STREET 154630V

INDEX AND REVISIONS
DECATUR, IL M.P. BD-270.99

DESIGNED	DIGITIZED	CHECKED	DATE
SAF/MLS	SAF/MLS	SAF/SWS	06-23-08

DESIGN DATE	REV. NO.	DRAWING	SHEET NO	FILE	SHEET
06-23-08	1	-----	-----	BD27099	I01
05-17-13	2				

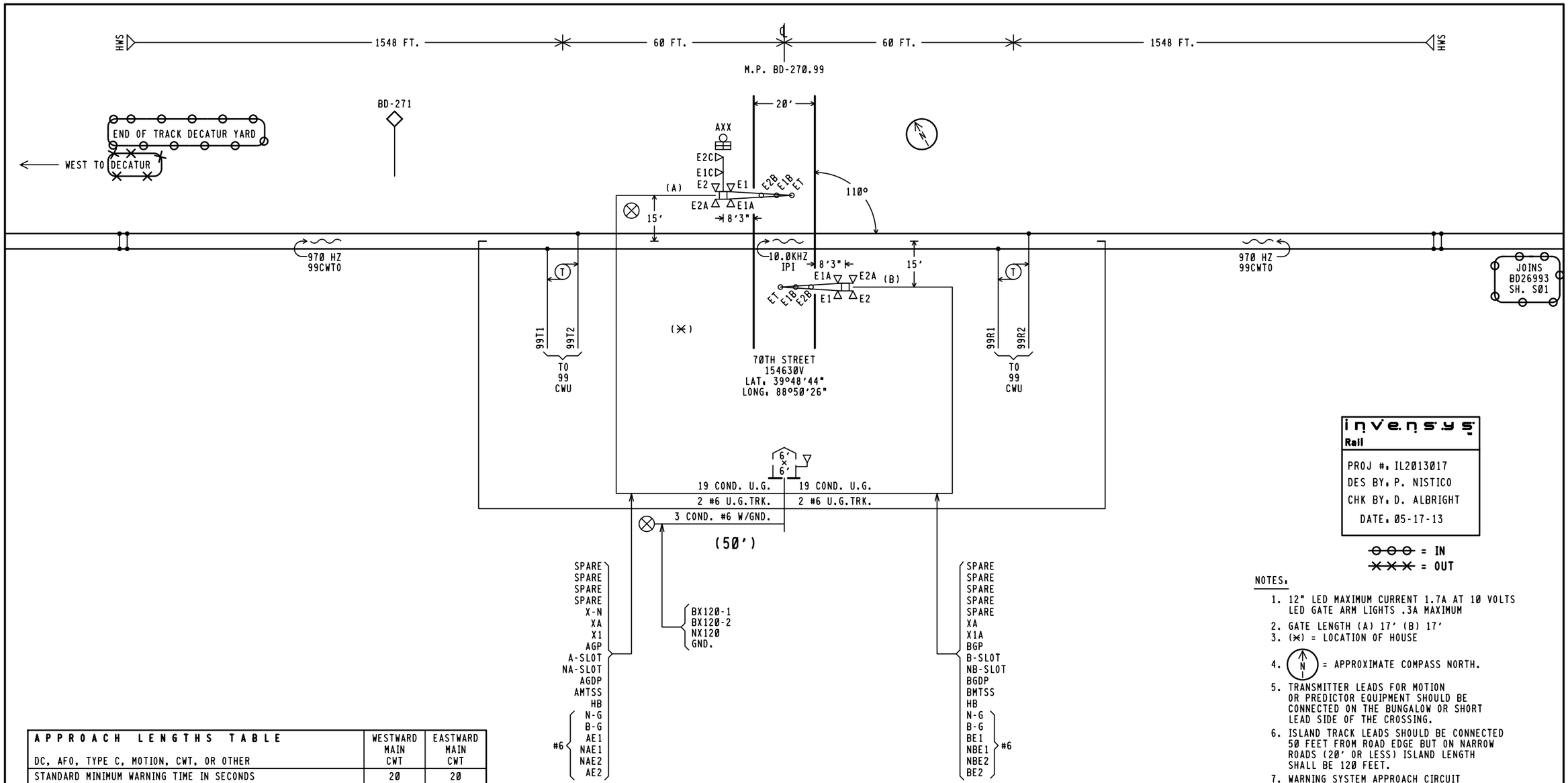

invensys Rail

PROJ #. IL2013017
DES BY. P. NISTICO
CHK BY. D. ALBRIGHT
DATE. 05-17-13

⊖⊖⊖ = IN
✕✕✕ = OUT

NOTES.

1. 12" LED MAXIMUM CURRENT 1.7A AT 10 VOLTS LED GATE ARM LIGHTS .3A MAXIMUM
2. GATE LENGTH (A) 17' (B) 17'
3. (✳) = LOCATION OF HOUSE
4. (N) = APPROXIMATE COMPASS NORTH.
5. TRANSMITTER LEADS FOR MOTION OR PREDICTOR EQUIPMENT SHOULD BE CONNECTED ON THE BUNGALOW OR SHORT LEAD SIDE OF THE CROSSING.
6. ISLAND TRACK LEADS SHOULD BE CONNECTED 50 FEET FROM ROAD EDGE BUT ON NARROW ROADS (20' OR LESS) ISLAND LENGTH SHALL BE 120 FEET.
7. WARNING SYSTEM APPROACH CIRCUIT DISTANCES ARE TO BE MEASURED FROM THE ISLAND TRACK CONNECTIONS.

APPROACH LENGTHS TABLE DC, AFO, TYPE C, MOTION, CWT, OR OTHER	WESTWARD MAIN CWT	EASTWARD MAIN CWT
STANDARD MINIMUM WARNING TIME IN SECONDS	20	20
ROADWAY GATE TIME IN SECONDS	5	5
CLEARANCE TIME IN SECONDS	1	1
DOT TRAFFIC LIGHT SIMULTANEOUS PREEMPT TIME IN SECONDS ✳	0	0
DESIGNED WARNING TIME FOR TRAINS AT TIME TABLE SPEED	26 SEC.	26 SEC.
DOT TRAFFIC LIGHT ADVANCE PREEMPT TIME IN SECONDS ✳	0	0
CONTROL EQUIPMENT DECISION TIME IN SECONDS	5	5
DESIGNED DETECTION TIME FOR TRAINS AT TIME TABLE SPEED	31 SEC.	31 SEC.
TIME TABLE MAXIMUM TRAIN SPEED IN MILES PER HOUR	30	30
BUFFER SPEED IN MILES PER HOUR	5	5
TOTAL WARNING SYSTEM DESIGN SPEED IN MILES PER HOUR	35	35
APPROACH DISTANCE TO ISLAND EDGE IN FEET	1548	1548
HALF WIDTH OF ISLAND IN FEET	60	60
APPROXIMATE MILE POSTS FOR APPROACH CIRCUIT	271.29	270.69

✳AUTHORIZING AGENCY. NONE
✳DATE OF REQUIREMENT. NONE
✳AMOUNT OF TIME (SEC.). NONE

CSX TRANSPORTATION
RAIL TRANSPORT GROUP ENGINEERING
COMMUNICATIONS AND SIGNALS

70TH STREET 154630V

TRACK AND SIGNAL PLAN
DECATUR, IL M.P. BD-270.99

DESIGNED	DIGITIZED	CHECKED	DATE
SAF/MLS	SAF/MLS	SAF/SWS	06-23-08

DESIGN DATE	REV. NO.	DRAWING	SHEET NO	FILE	SHEET
✕06-23-08✕	✕1✕	-----	-----	BD27099	S01
⊖05-17-13⊖	⊖2⊖				

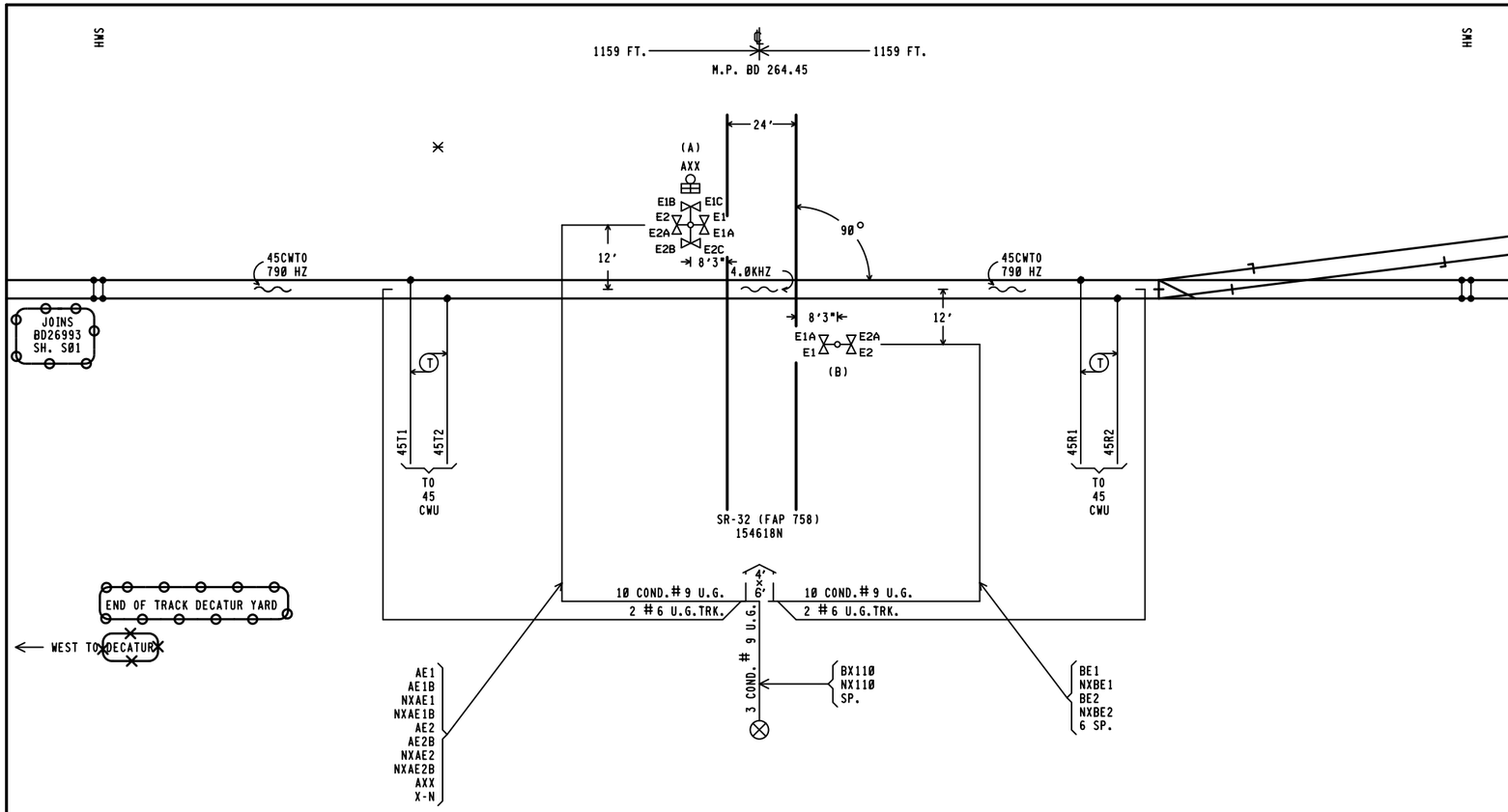

invensys Rail

PROJ #: IL2013017
DES BY: P. NISTICO
CHK BY: D. ALBRIGHT
DATE: 05-17-13

~~OOO~~ = IN
~~XXX~~ = OUT

NOTE:

X = LOCATION OF HOUSE

THE TRANSMITTER LEADS FOR MOTION OR PREDICTOR EQUIPMENT SHOULD BE CONNECTED ON THE BUNGALOW OR SHORT LEAD SIDE OF THE CROSSING.

12" LED MAXIMUM CURRENT 1.7A ON FLASHER MAST LIGHTS.

REVISIONS

06-17-94	HAR	IL91037
03-27-08 SAF IL2006046		
04-22-09 SAF IL2008022		

The operation of any circuits and equipment shown herein must be checked by point to point breakdown and complete operational testing of the system (or sections of the system) into which they are connected.

CSX TRANSPORTATION
RAIL TRANSPORT GROUP ENGINEERING
COMMUNICATIONS AND SIGNALS

LA PLACE, IL.

SR-32 (FAP 758) 154 618 N BD 264.45

TRACK AND SIGNAL PLAN

DESIGNED	DIGITIZED	CHECKED	DATE
HAR./T.G.J.	HAR./J.K.B.	HAR./D.K.J.	08-05-91

DRAWING	SHEET NO	NEXT SH	NEXT FILE	NEXT SH	FILE	SHEET
-----	-----	-----	BD26445	E01	BD26445	S01

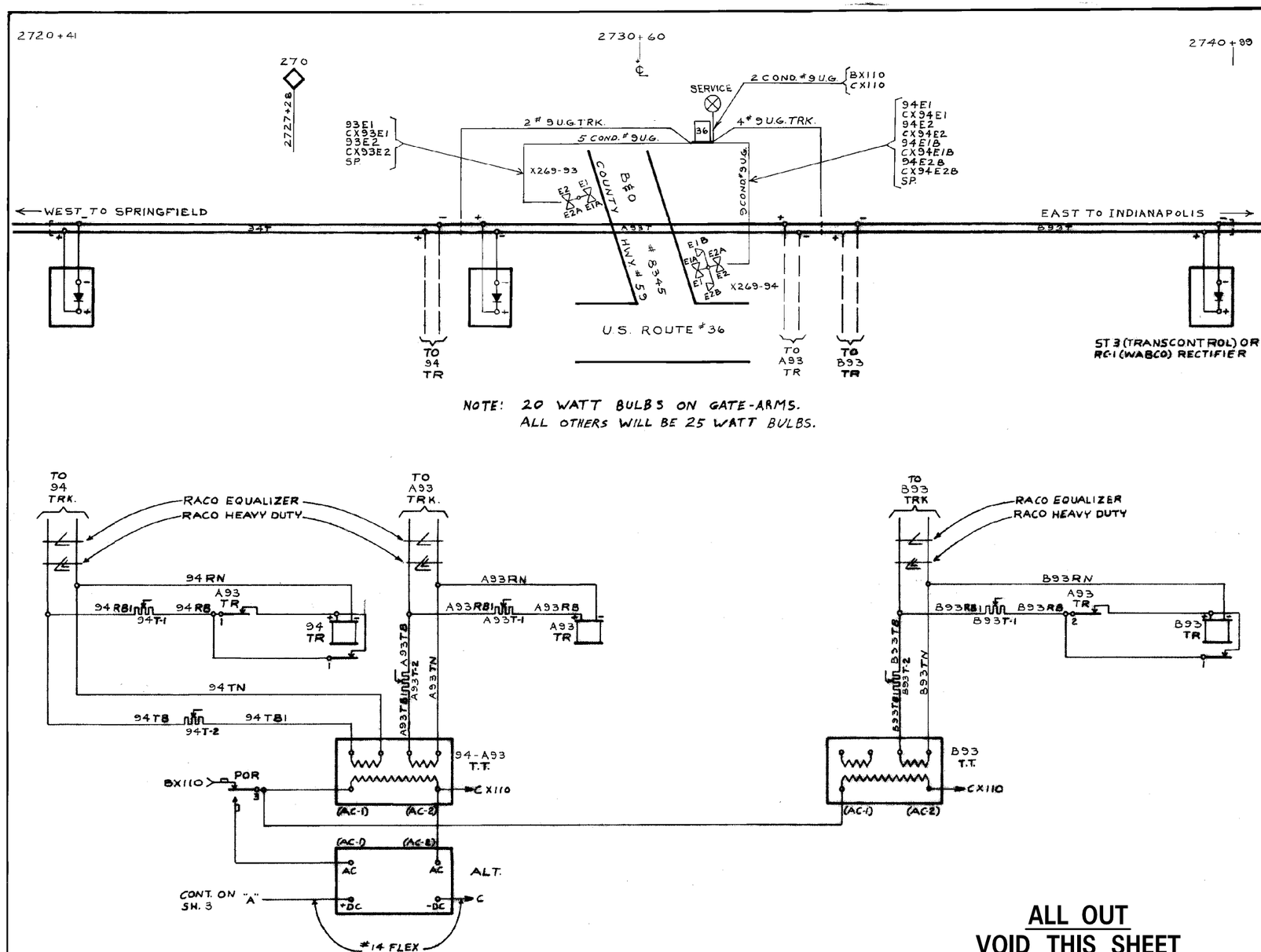

ALL OUT
VOID THIS SHEET
UPON AS-IN-SERVICE

invensys Rail

PROJ #: IL2013017
DES BY: P. NISTICO
CHK BY: D. ALBRIGHT
DATE: 05-17-13

REVISIONS
1-17-74 REPORT JEW 9-7-73
5-31-90 SAFE.

1546281

THE CHESAPEAKE AND OHIO RAILWAY CO.
THE BALTIMORE AND OHIO RAILROAD CO.
OFFICE OF SUPERINTENDENT SIGNALS
HUNTINGTON, W. VA.

CASNER, ILL.
FLASHING LIGHT SIGNALS
AT COUNTY HWY. # 59
B&O CROSSING # 8345

DATE 12-5-72	SHEET NO	DRAWING NO
DRAWN PDF	1	
TRACED PDF		
CHECKED WH	NEXT SH 2	2175-6-HH

S2011040✓

RASTER FILE: 2175-6-HH-1.CIT MS FILE: 2175-6-HH-1 B&O MASTER DRAWING NO. 1 11-13-72

LOCATION	EQUIPMENT		RELAY CONTACT CONSIST											
	NOMENCLATURE	TYPE	1	2	3	4	5	6	7	8	1P	2P	3P	4P
36 WAY CASE	94TR	RELAY K2	F	FB	F									
	A93TR	" K2	F	F	B	F								
	B93TR	" K2	F	FB	F									
	93WSR	RELAY K7	F	B	F									
	94ESR	" K7	F	B	F									
	93-94XR	" K84	B	B		B								
	EOR	RELAY K89	FB	FB	FB	FB								
	POR	" K91	FB	FB	FB	FB	FB	FB						
	93WS	RESISTOR 1000 Ω												
	94ES	" 1000 Ω												
	94T-1	" 5 Ω ADJ.												
	94T-2	" 5 Ω "												
	A93T-1	" 5 Ω "												
	A93T-2	" 5 Ω "												
	B93T-1	" 5 Ω "												
	B93T-2	" 5 Ω "												
	94-A93TT	TRANSFORMER 54940-103 GR.40												
	B93TT	" " " " "												
	ALT.	ALTERNATOR 12 V. DWG. 1060LB												

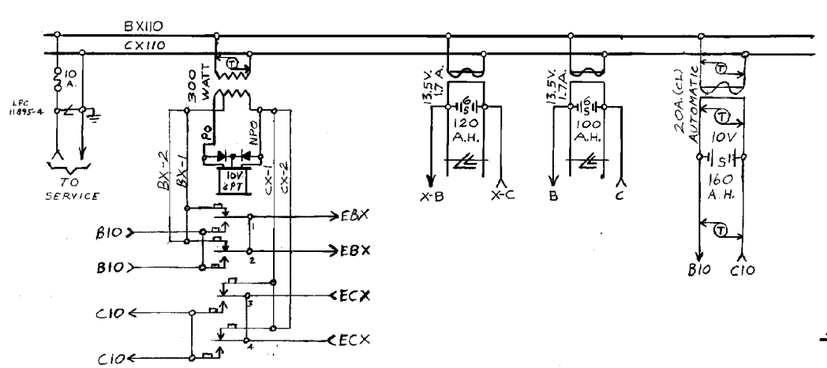

36 WAY CASE

ALL OUT
VOID THIS SHEET
UPON AS-IN-SERVICE

invensys Rail

PROJ #. IL2013017
DES BY. P. NISTICO
CHK BY. D. ALBRIGHT
DATE. 05-17-13

REVISIONS
1-17-74 REPORT JEW 9-7-73
5-31-90 SAFE.

Chessie System
SIGNAL AND COMMUNICATION DEPARTMENT

CASNER, ILL.
FLASHING LIGHT SIGNALS
AT COUNTY HWY. #59
B&O CROSSING #8345

DATE 12-5-72	SHEET NO.	DRAWING NO.
DRAWN P.DE	2	
TRACED PDF		
CHECKED WVP	NEXT SH. 3	2175-6-HH

S2011041V

MS FILE. 2175-6-HH-2

K&E 17 5153 5-77 MC6649

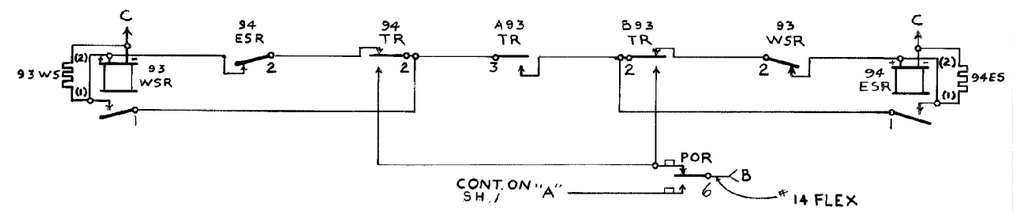

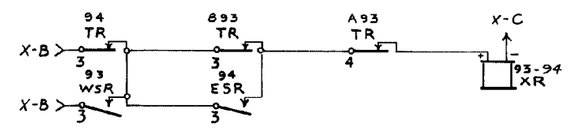

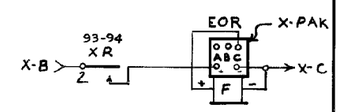

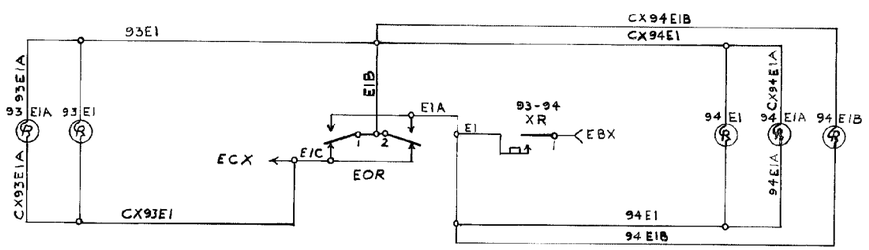

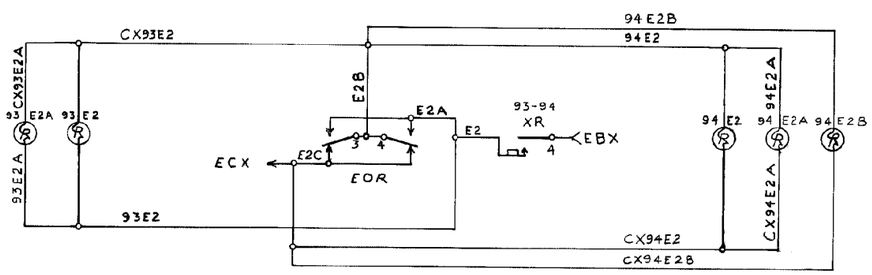

ALL OUT
VOID THIS SHEET
UPON AS-IN-SERVICE

invensys Rail

PROJ #. IL2013017
DES BY. P. NISTICO
CHK BY. D. ALBRIGHT
DATE. 05-17-13

REVISIONS
REPORT JEW 9-7-73
5-31-90 SAFE.

Chessie System
SIGNAL AND COMMUNICATION DEPARTMENT

CASNER, ILL.

FLASHING LIGHT SIGNALS AT COUNTY HWY. # 59 B&O CROSSING # 8345

DATE 12-5-72	SHEET NO. 3	DRAWING NO.
DRAWN P.D.F.		
TRACED P.D.F.		
CHECKED D.P.	NEXT SH.	2175-6-HH

[redacted] S2011042