ICC Docket No. 13-0550
CUB-City Exhibit 1.2

12. Whole-House Fan Penetration at Attic

An insulated cover is provided that is gasketed or sealed to the opening from either the attic side or ceiling side of the fan.

A whole house fan is a fan installed in the ceiling to help quickly cool the house by drawing air into the house through open windows on summer mornings and evenings when the outside temperature is lower than the indoor temperature. Ideally, the air should be ducted to exhaust outside, not into the attic space. During the winter months (and in summer when the air conditioner is running), the whole house fan is not used. At those times, it represents a potential energy loss because it is essentially a large, uninsulated hole in the ceiling. Since standard fan louvers do not insulate or seal tightly, a cover should be constructed or purchased to air seal and insulate this hole from the attic side, the house side, or in case of very hot or cold weather, both sides. Homeowners must remember to remove cover(s) before operating the fan and to replace cover(s) during seasons when the fan is not in use.

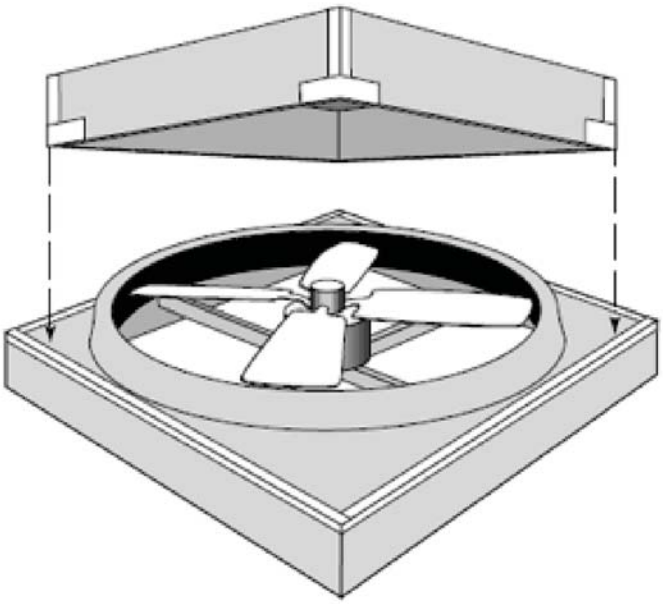

Figure 12.2. Install a removable, insulating, air-sealing cover over your whole house fan (Source: Southface Energy Institute 1999).

When To Do This

When a whole house fan is installed.

Durability & Health

A whole house fan can pull large quantities of air from the home and, if windows are not open, it can easily backdraft a fireplace or combustion appliance located in the home or attic. Some localities will not permit a whole house fan to be installed if a furnace is located in the attic or if there is a combustion appliance in the home that derives its combustion air from either the attic or the inside of the home unless the homeowner 1) encloses the combustion appliance so that it obtains combustion air from outside the home; 2) ducts the whole house fan directly to the exterior; or 3) provides a switching device that allows only one of the appliances (fan or furnace) to be on at a time (Davis 2001). The whole house fan should be ducted to the outside or adequate ventilation must be provided in the attic to prevent the attic from being overpressurized and pushing attic dust into the house.

2009 IECC/2009 IRC Code

Requirement for New Construction and Additions

Shafts, penetrations

Duct shafts, utility penetrations, knee walls and flue shafts opening to exterior or unconditioned space are sealed.

More Information

- Building America Best Practices
- Davis 2001
- DOE 1999
- Southface Energy Institute 1999

ICC Docket No. 13-0550
CUB-City Exhibit 1.2

13. Exterior Walls

Service penetrations are sealed.

Your exterior walls may have a surprising number of holes in them—for plumbing pipes and vents, electrical wires and conduits, electrical fixtures, clothes dryer ducts, and exhaust fans. Holes may also have been drilled through the top and bottom plates; ideally, these were caulked and sealed during construction as these areas are nearly impossible to get to later, unless drywall or exterior sheathing is being replaced. Your contractor will caulk penetrations through walls from the exterior and interior. An ideal time to seal the drywall to the subfloor is when walls are being painted and baseplate trim is removed (just pull back the carpet) or when floor covering is being replaced.

When To Do This

Seal wall penetrations whenever accessible. Sill- and top-plate penetrations may only be accessible during construction of new walls or additions or when exterior or interior wall sheathing is being replaced. Electrical switches and outlets can be accessed any time.

Durability & Health

Unsealed penetrations can be a pathway for dust and pests to enter the home. Penetrations through the top plate must be sealed if the top plate is in the plane of an intended air, smoke, or fire separation (BSC 2009).

2009 IECC/2009 IRC Code

Requirement for New Construction and Additions

Shafts, penetrations

Duct shafts, utility penetrations, knee walls and flue shafts opening to exterior or unconditioned space are sealed.

Shower/tub on exterior wall

Showers and tubs on exterior walls have insulation and an air barrier separating them from the exterior wall.

Electrical/phone box on exterior walls

Air barrier extends behind boxes or air sealed-type boxes are installed.

More Information

- Building America Best Practices
- Building Science Corporation 2006
- Building Science Corporation 2009e
- U.S. Environmental Protection Agency 2008a

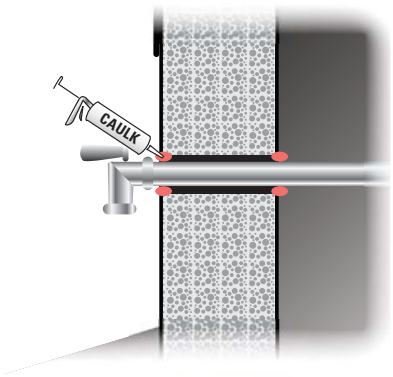

Figure 13.1. Caulk all plumbing penetrations through exterior walls.

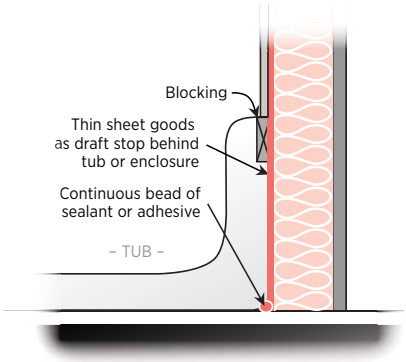

Figure 13.2. If you are remodeling a bathroom make sure you seal and insulate behind the tub or shower, especially if it is on an exterior wall.

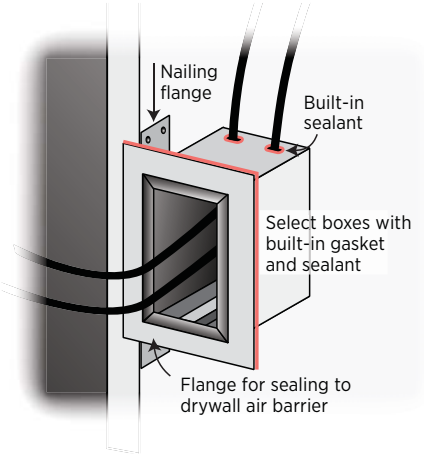

Figure 13.3. Seal all electric outlets and switches with foam sealant, or select boxes with built-in sealant or gaskets. Install foam gaskets between electrical outlets or switches and their coverplates, and insert plastic "child-safety" plugs into the outlets to further block airflow.

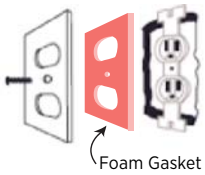

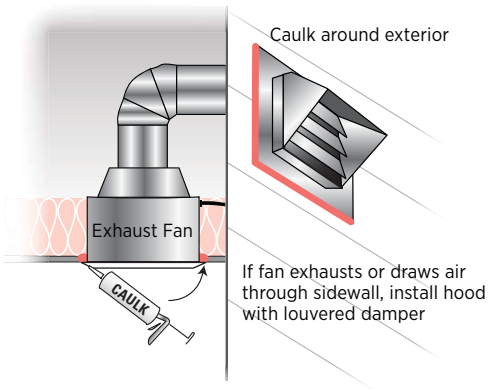

Figure 13.4. Caulk around exhaust fans at the ceiling and exterior wall. Also caulk around exterior outlets and light fixtures.

ICC Docket No. 13-0550
CUB-City Exhibit 1.2

14. Fireplace Wall

Air sealing is completed in framed shaft behind the fireplace or at fireplace surround.

Fireplaces have many potential areas of air leakage. Air sealing and insulation are often missing from the enclosure that forms a prefabricated fireplace. There are often unsealed air gaps around the flue and the surround. Flue dampers are not airtight, allowing air to escape up the chimney even when no fire is burning in the fireplace (BSC 2009). A fireplace can actually waste more heat than it creates (Iowa Energy Center 2008).

Even if you close the fireplace damper and it leaks just a little, a lot of warm air from your home will be drawn up the chimney and be replaced by cold air leaking into the house. If you use the fireplace, follow these air sealing tips: (Iowa Energy Center 2008)

- Every year, have the fireplace and chimney inspected and cleaned by a certified chimney sweep.
- Check the seal of the flue damper with an incense stick or piece of burning paper. Seal around the damper assembly with refractory cement, but don't seal the damper closed. Replace warped or missing dampers.
- Use a removable plug like a chimney balloon that you insert in the chimney above the damper and inflate to plug air leaks when you're not using the fireplace. If you forget to remove it before starting a fire, it will react to the heat and quickly deflate.
- Install tight-fitting glass doors.
- Make a tight-fitting air barrier to cover the fireplace opening when not in use from rigid board insulation and plywood edged with pipe insulation (Iowa Energy Center 2008).
- Consider installing a sealed, natural gas or propane fireplace insert. These inserts are sealed combustion and do away with door and flue leaks.

Studies Show

Studies have shown that fireplace dampers are often left open. One study showed found 80% of fireplace dampers were inadvertently left open (Tyrol and Pate 2007). In a DOE-funded study of 56 new homes in Arkansas with gas or wood fireplaces, the fireplaces accounted for 5.3% of total house air leakage (Brown 1999).

When To Do This

At any time.

Durability & Health

An open, unsealed fireplace carries risks of backdrafting carbon monoxide, smoke, and ash into the home. A sealed fireplace with its own combustion air intake is preferred. Homes that use gas or wood fireplaces should have carbon monoxide detectors.

2009 IECC/2009 IRC Code

Requirement for New Construction and Additions

Fireplace

Fireplace walls include an air barrier.

More Information

- Building America Best Practices
- Brown 1999
- Building Science Corporation 2009a
- Dalicieux and Nicolas 1990
- Iowa Energy Center 2008
- Tyrol and Pate 2007
- U.S. Environmental Protection Agency 2008a

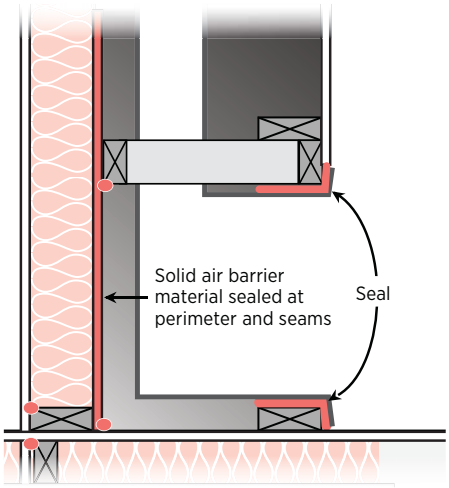

Figure 14.1. Air seal the enclosure surround and flue.

ICC Docket No. 13-0550
CUB-City Exhibit 1.2

15. Garage/Living Space Walls

Air sealing is completed between garage and living space. Pass-through door is weather stripped.

When To Do This

At any time.

Durability & Health

Garages often contain harmful chemicals and gases that must be kept out of the living space by thorough air sealing of any common walls and ceilings.

2009 IECC/2009 IRC Code

Requirement for New Construction and Additions

Garage separation

Air sealing is provided between the garage and conditioned spaces.

More Information

- Building America Best Practices
- Aspen Publishers 2000
- Iowa Energy Center 2008
- University of Illinois Extension Office
- U.S. Environmental Protection Agency 2010

For occupant health and safety, the garage should be completely air sealed from the living areas of the house. When the garage is beneath a second-story living space, the gaps created by the floor joists spanning both the living space and the garage must be blocked off and sealed. If the air handler for a central furnace must be located in the garage, it should be in an air-sealed closet with its own air intake, so that it is not drawing garage air to circulate through the house.

If you have an attached garage, expect your contractor to visually inspect for cracks or improper sealing of the walls separating the garage from the home, to test the seal tightness of doors linking the garage with the rest of the home, to test carbon monoxide levels in the house, to measure interface leakage between the garage and house, and to determine what size garage exhaust fan, if any, is advisable.

Steps to a Healthier Garage – *eliminate, isolate, ventilate*.

Keep in mind the following:

1. Your very best option is to build a detached garage.
2. If that is not possible, try removing or isolating pollutants. Park cars, mowers, etc., outside. Do not let cars or mowers idle in the garage (and of course never start them with the garage door closed). Start gas-powered mowers, leaf blowers, etc., outside. Store paints, solvents, and other chemicals in tight containers.

Your contractor can assist you with the following recommendations:

3. Seal all penetrations through the common wall and ceiling. Use gaskets, airtight drywall technique, etc., to make the common wall and ceiling airtight.
4. Seal ducts located in the garage. (Avoid locating supply or return registers in the garage when remodeling.)
5. Install a self-closing, insulated, metal, fire-rated door with a good weather seal between the living space and the garage.
6. Install a passive roof vent to keep the garage at a negative pressure in relationship to the house. If needed, install a timed exhaust fan that vents to the outside.

ICC Docket No. 13-0550
CUB-City Exhibit 1.2

Studies Show

In a field study of 12 homes in Anchorage, Alaska, researchers found that carbon monoxide (CO) from car starts in the garages entered all but 1 of the 12 houses. Four of the homes came close to the EPA CO exposure limit and, in one case, exceeded it (Aspen Publishers 2000). Noted the author: "In all but one case, the house was operating under negative pressure relative to the garage due to the stack effect. In other words, the house was sucking CO and other airborne contaminants through the common walls and ceilings." The researchers found high CO in homes where furnace ductwork was located in the garage and where the garage was located under occupied space above. A study by Health Canada identified 150 different pollutants commonly found in garages. Preliminary results from 25 houses tested in that study found that an average of 13% of all infiltration into the houses was through the common wall between the garage and house. A Minnegasco study measured typical leakage at an even higher 25% (Aspen 2000).

15.2. Seal rim joists of the wall separating the house's living space from the garage with pieces of wall board and spray foam.

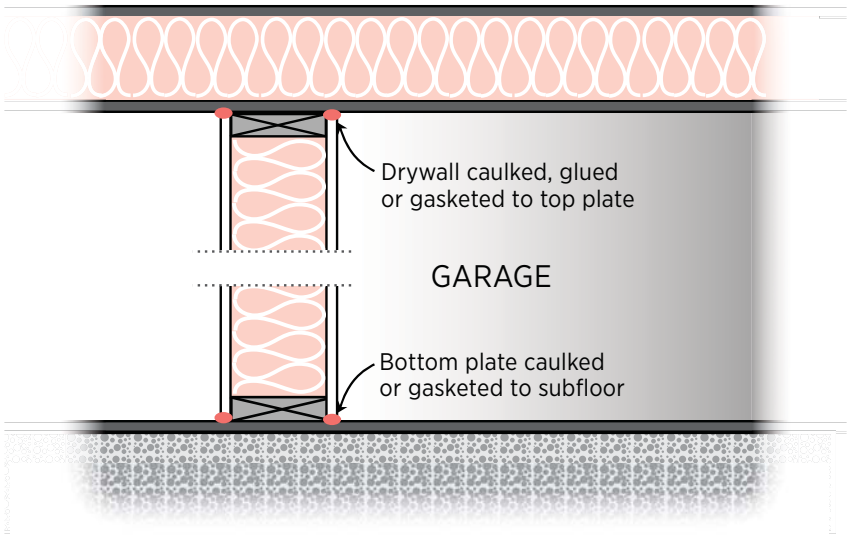

Figure 15.1. Finish the walls that separate the garage from the rest of the home with drywall that is sealed to the top and bottom plate with a bead of caulk.

ICC Docket No. 13-0550
CUB-City Exhibit 1.2

16. Cantilevered Floor

Cantilevered floors are air sealed and insulated at perimeter or joist transitions.

Cantilevered floors, second-story bump-outs, and bay windows are another area in the home that is often lacking proper air sealing. The floor cavity must be filled with insulation with good alignment (i.e., that is completely touching) the underside of the floor. The interior and exterior sheathing needs to be sealed at the framing edges. Blocking between floor joists should form a consistent air barrier between the cantilever and the rest of the house. Continuous sheathing, such as insulating foam sheathing, should cover the underside of the cantilever, and be air sealed at the edges with caulk.

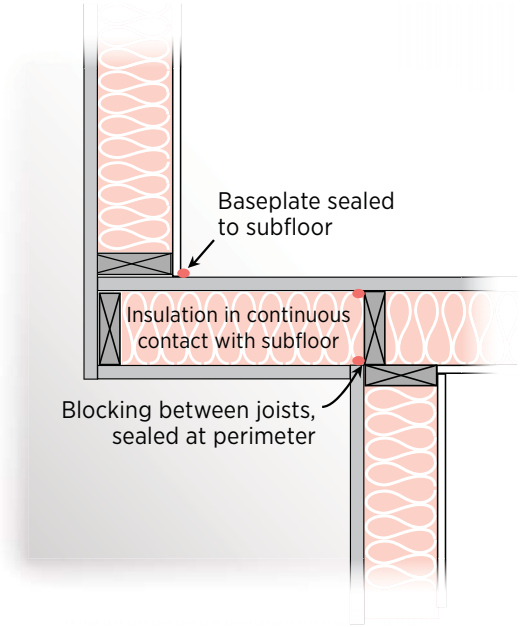

Figure 16.1. Block and air seal both the floor-to-upper wall junction and the floor-to-lower wall junction.

When To Do This

When comfort complaints or high utility bills warrant it; if an infrared camera inspection reveals the cantilever floor to be a source of high leakage.

Durability & Health

If a cantilever isn't properly air sealed and insulated, moist air from the home can pass into the cantilever floor cavity and condense on the coldest surface it finds—the backside of the sheathing or band joist—causing mold to grow there.

2009 IECC/2009 IRC Code

Requirement for New Construction and Additions

Floors (including above-garage and cantilevered floors)

Insulation is installed to maintain permanent contact with underside of subfloor decking. Air barrier is installed at any exposed edge of insulation.

More Information

- Building America Best Practices
- Lugano 1998
- U.S. Environmental Protection Agency 2008b

ICC Docket No. 13-0550
CUB-City Exhibit 1.2

17. Rim Joists, Sill Plate, Foundation, and Floor

Rim joists are insulated and include an air barrier. Junction of foundation and sill plate is sealed. Penetrations through the bottom plate are sealed. All leaks at foundations, floor joists, and floor penetrations are sealed. Exposed earth in crawlspace is covered with Class I vapor retarder overlapped and taped at seams.

The rim joist (also called a band joist) is the horizontal beam that rests on top of the foundation wall or between floors. The floor joists are attached to or run parallel with it. Rim joists are a particularly troublesome area for air leakage. Several framing components (foundation wall and sill plate or top plate, rim joist, and subfloor above) need to be connected and sealed to form a continuous air barrier. Your contractor will inspect this area and, if needed, air seal and insulate along the joints where the floor joists meet the rim joist and the rim joist meets the subfloor. The rim joist can be air sealed and insulated with caulk and batt insulation, or rigid foam cut to fill the space between each floor joist and sealed in place with spray foam. Another option is to spray high- or low-density urethane foam at each joist bay to cover the foundation wall-top plate-rim joist-subfloor connections.

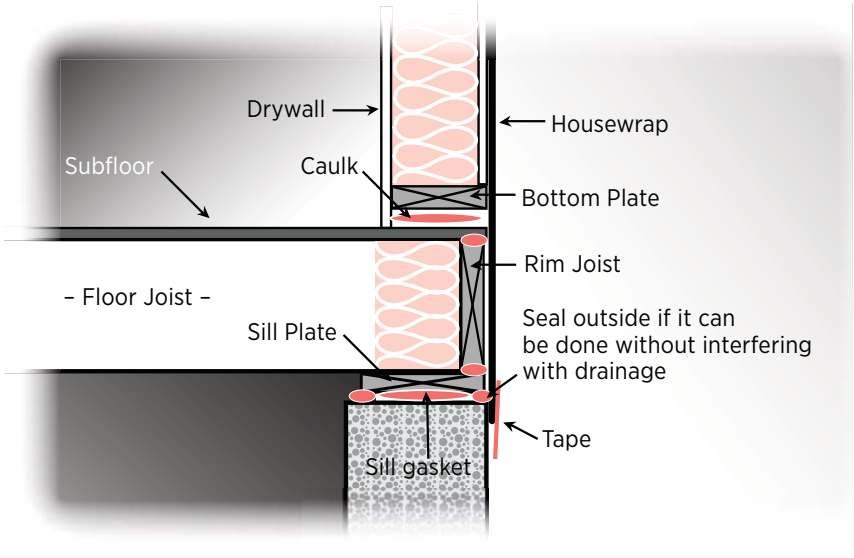

Figure 17.1. Use caulk or spray foam to air seal where the foundation wall meets the sill plate, where the sill plate meets the rim joist, and where the rim joist meets the subfloor.

When To Do This

Air sealing rim joists below the first floor can be done in conjunction with finishing the basement, when insulating the basement walls, or whenever an unsealed rim joist is accessible from inside. Plywood subfloor seams can be sealed when replacing flooring or replacing or installing insulation beneath the floor.

Durability & Health

The interior side of the rim joist is a cold surface in wintertime; condensation can form there if it is not properly insulated. A dirt crawlspace floor should be covered with a Class 1 vapor retarder (e.g., 6-mil polyethylene). If the home has an unvented crawlspace, the underside of the floor should be air sealed and a vent stack can be installed to minimize entry of soil gases into living space.

2009 IECC/2009 IRC Code

Requirement for New Construction and Additions

Walls

Junction of foundation and sill plate is sealed.

Corners and headers are insulated.

Rim joists

Rim joists are insulated and include an air barrier.

Crawlspace walls

Exposed earth in unvented crawlspaces is covered with Class I vapor retarder with overlapping joints taped.

ICC Docket No. 13-0550
CUB-City Exhibit 1.2

Figure 17.2. Spray foam along the basement rim joist to provide a complete air barrier connecting the foundation wall, sill plate, rim joist, and subfloor (Source: BSC 2009C).

Your contractor will seal the seams of the subfloor plywood panels if they are accessible. The contractor will also seal all holes that go through the basement ceiling to the floor above, such as holes for plumbing, HVAC ducts, and furnace vent pipes if the furnace is located in the basement.

If your house's foundation is a slab, your contractor can check for and seal air leaks where the sill plate meets the foundation. If your home has an unvented crawlspace your contractor will check the foundation for cracks and holes that may need sealing. The crawlspace access hatch should be weather stripped or gasketed. If the crawlspace floor has exposed earth, this should be covered with Class I vapor retarder with overlapping joints that are taped.

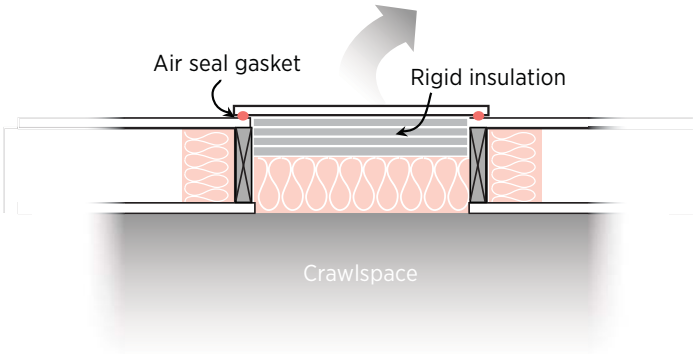

Figure 17.3. Air seal the crawlspace access hatch by installing a gasket or weather stripping around the hatch edges.

More Information

- Building America Best Practices
- Building Science Corporation 2009c
- Conbere and Fried 2006
- Braun 1995
- Building Science Corporation 2009e
- Lstiburek 2004a, b; 2006; 2008
- U.S. Department of Energy 2000a
- U.S. Environmental Protection Agency 2008b
- U.S. Environmental Protection Agency 2009b
- U.S. Environmental Protection Agency 2009c

Studies Show

One homeowner in Illinois had spent thousands of dollars re-siding his house with rigid foam insulation, adding insulation, upgrading his furnace, and replacing windows but his house was still drafty and his utility bills were still high. He called in a BPI-certified contractor who conducted several assessments including a blower door test of the whole house and individual rooms to determine where air was leaking. The blower door showed the home's air leakage was three times higher than preferred. The contractor recommended plugging leaks in the crawlspace and rim joists; adding joist insulation; air-sealing all plumbing, electrical, service, and duct penetrations; and insulating and air sealing the crawlspace access and attic hatch cover. The upgrades cost $2,500 and saved the homeowner $700 a year in energy costs (Conbere and Fried 2006).

ICC Docket No. 13-0550
CUB-City Exhibit 1.2

18. Windows and Doors

Space between window/door jambs and framing is sealed.

When windows are installed in a new house, the rough opening (the space left for the window) is typically 1.5 to 2 inches larger than the window frame to give the installer room to install, plumb, and square the window. The same is true of doors. Your contractor can properly seal around the existing windows by removing the interior trim and filling the rough opening with non-expanding foam or backer rod and caulk. A simpler but more visible alternative is to leave the interior trim in place and seal around it with a clear silicone caulk or paintable latex caulk with silicone. Replace any cracked or loose panes. Consider replacing older, single-pane windows that show signs of leakage, water damage, or condensation with new double-pane windows installed with proper air sealing and flashing.

Windows and doors should be weather stripped. See the DOE Energy Savers website for a comprehensive description of different types of caulking and weather stripping material www.energysavers.gov/your_home/insulation_airsealing/index.cfm/mytopic=11260.

Older homes often have double-hung windows with chases hidden in the wall for counter weights. Access these chases by removing the side trim or by going through access ports along the sides of the window. If the window is replaced, the weight should be removed and the chases filled with insulation and sealed. If you have old windows with working pulleys, the pulley holes can be air sealed but kept usable with plastic caps called pulley seals. Doors should be self-closing and have a tight fitting sill.

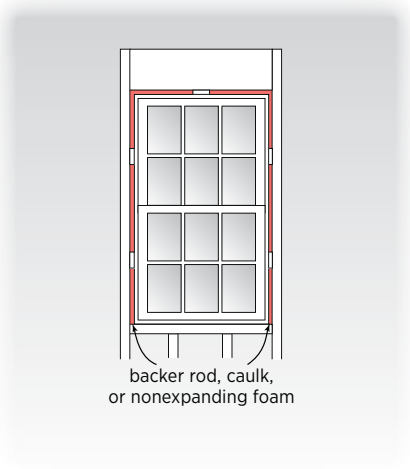

Figure 18.1. Use backer rod, caulk, or nonexpanding foam approved for windows and doors to fill the rough-in gap around doors and windows (DOE 2000).

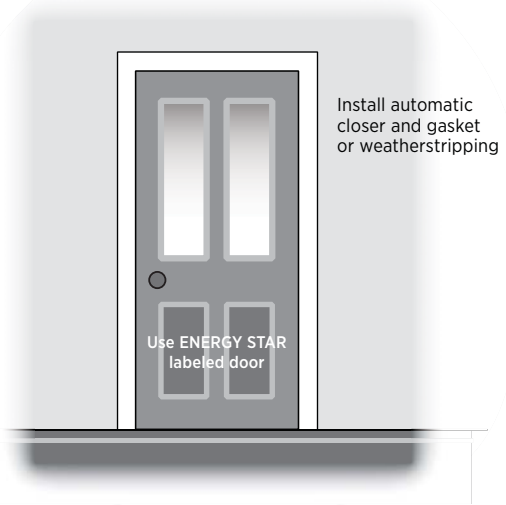

Figure 18.2. Install automatic closer and gasket or weather stripping around doors. Caulk around trim.

When To Do This

Any time.

Durability & Health

More efficient windows may be less prone to condensation and related mold growth. Painted window sashes and frames in homes built before 1978 may contain lead-based paint; use a contractor experienced in lead removal.

2009 IECC/2009 IRC Code

Requirement for New Construction and Additions

Windows and doors

Space between window/door jambs and framing is sealed.

More Information

- Building America Best Practices
- Building Science Corporation 2009b
- Stovall et al. 2007
- U.S. Department of Energy 2000a
  U.S. Department of Energy 2009c
- U.S. Environmental Protection Agency 2008b

Studies Show

A study conducted at Oak Ridge National Laboratory's Buildings Technology Center on window air sealing showed that windows with ¾-inch rough-in gaps had an equivalent leakage area of 28.2 cm^2/m^2. When the gap was caulked from the interior side of the wall, the equivalent leakage area was cut to 0.5 cm^2/m^2 *(Stovall et al. 2007)*.

ICC Docket No. 13-0550
CUB-City Exhibit 1.2

19. Common Walls Between Attached Dwelling Units

The gap between a gypsum shaft wall (i.e., common wall) and the structural framing between units is sealed.

When To Do This

Whenever common wall is accessible.

Durability & Health

Common walls between units are fire-rated and should be air sealed and properly blocked to minimize fire spread and entry of air, moisture, and pests.

2009 IECC/2009 IRC Code

Requirement for New Construction and Additions

Common wall

Air barrier is installed in common wall between dwelling units.

More Information

- Braun and Woods 1995
- Building Science Corporation 2009e
- U.S. Environmental Protection Agency 2008b

Common walls between units in multi-family housing (e.g., townhouses, duplexes, and apartments) should be constructed as airtight assemblies for sound, smoke, fire, and air quality control. However, experience has shown that these common walls can often be significant sources of air and heat loss if gaps or cracks exist in the connections between each unit's walls. Your contractor can determine whether this is a significant source of air leakage in your home.

To reduce air leakage, this assembly should be air sealed at all boundaries. Your contractor will seal wood frame walls with fireproof spray foam (EPA 2008). Masonry block party walls, which form "chimneys" because of their porosity and open cores, can be air sealed with two-component urethane foam, which also reduces sound, odor transfer, and dust, insects, and moisture entry (Braun et al. 1995).

Because these walls are fire-rated assemblies for each unit, acceptable materials for air-sealing common walls can vary significantly around the country. Your contractor will confirm with local code officials which material is preferred for fire safety reasons, prior to retrofitting. The contractor will seal all plumbing penetrations through the drywall surface of common walls with fire-rated sealant materials (BSC 2009).

Figure 19.1. *Seal air gaps between two framed common walls (Source: Energy Services Group, from EPA 2008)*

ICC Docket No. 13-0550
CUB-City Exhibit 1.2

References

Aspen Publishers 2000. "How Attached Garages Poison Our Indoor Air, And What Builders Can Do About It." in *Energy Design Update*, Volume 20, No. 12; December 2000 http://arkansasenergy.org/business_development/energy/files/Clearinghouse/How%20Attached%20Garages%20Poison%20Our%20Indoor%20Air.pdf

ASTM 1991. "Standard Test Method for Determining the Rate of Air Leakage through Exterior Windows, Curtain Walls, and Doors under Specified Pressure Differences across the Specimen." ASTM E283-91, West Conshohocken, Pennsylvania.

Building America Best Practices, *Volumes 1–9.* These Best Practices Guides from the U.S. Department of Energy provide building science guidance for builders of energy efficient homes in every U.S. climate zone. Available for free download at http://www1.eere.energy.gov/buildings/building_america/publications.html

Braun, B. J. Hansen, and T. Woods 1995. "Urethane foams and air leakage control" *Home Energy* Vol. 12 (4), published Jul-Aug 1995.

Brown, Evan 1999. *Energy Performance Evaluation of New Homes in Arkansas*, Evan Brown, consultant to the Arkansas Energy Office, December 1999, www.energycodes.gov/implement/pdfs/Arkansas_rpt.pdf

Building Science Corporation 2006. *Read This Before You Design, Build, or Renovate* www.buildingscience.com/documents/primers/plonearticlemultipage.2006-12-05.5229931729/section-2-recommendations

Building Science Corporation 2009a. "Air Barriers—Tub, Shower and Fireplace Enclosures," Information Sheet 407 for All Climates 5/20/2009, prepared by BSC for DOE's Building America program, www.buildingscience.com/documents/information-sheets/4-air-barriers/air-barriers2014tub-shower-and-fireplace-enclosures/?searchterm=building%20america

Building Science Corporation 2009b. "Air Sealing Windows," Information Sheet 406 for All Climates 5/20/2009, prepared by BSC for DOE's Building America program, www.buildingscience.com/documents/information-sheets/4-air-barriers/sealing-air-barrier-penetrations/?searchterm=building%20america

Building Science Corporation 2009c. "Critical Seal (Spray Foam at Rim Joist)" Information Sheet 408 for All Climates 09/18/2009, prepared by BSC for DOE's Building America program, www.buildingscience.com/documents/information-sheets/4-air-barriers/info-408-critical-seal-spray-foam-at-rim-joist/?searchterm=building%20america

Building Science Corporation 2009d. *Duct Sealing*, Information Sheet 603, prepared by BSC for DOE's Building America program. www.buildingscience.com/documents/information-sheets/hvac-plumbing-and-electrical/information-sheet-duct-sealing/?searchterm=building%20america

Building Science Corporation 2009e. "Sealing Air Barrier Penetrations," Information Sheet 405 for All Climates 5/20/2009, prepared by BSC for DOE's Building America program, www.buildingscience.com/documents/information-sheets/4-air-barriers/sealing-air-barrier-penetrations/?searchterm=building%20america

Conbere, Susan and Kate Fried 2006. "A Doctor in the House; Building performance testing has given one Illinois remodeler an edge in his market - and on the books," *Professional Remodeler*, June 1, 2006.

Consumer Product Safety Commission 2010. "What You Should Know About Combustion Appliances and Indoor Air Pollution." CPSC Document #452, accessed 3/12/2010, www.cpsc.gov/cpscpub/pubs/452.html

Cummings, J.B., J.J. Tooley, N. Moyer, and R. Dunsmore, "Impacts of duct leakage on infiltration rates, space conditioning energy use, and peak electrical demand in Florida homes," in *Proceedings of the 1990 ACEEE Summer Study on Energy Efficiency in Buildings*, Asilomar, CA, (1990), pp. 69–76.

Dalicieux P and C Nicolas 1990. "Ventilation Perturbations Due to an Open Fireplace in a House." *Energy and Buildings* 14(3):211-214

Davis 2001. *Whole House Fan Installation*, Building Department, City of Davis, California, July 23, 2001. www.city.davis.ca.us/cdd/pdfs/Whole_House_Fan.pdf

Granade, HC, J Creyts, A Derkach, P Farese, S Nyquist, and K Ostrowski 2009. *Unlocking Energy Efficiency in the US Economy*. McKinsey and Company. www.mckinsey.com/clientservice/electricpowernaturalgas/US_energy_efficiency/

House Energy 2009. "Ventilation and Electrical Penetrations," webpage, www.house-energy.com/AirLeaking/HvacAL.html

Iowa Energy Center 2008. *Home Tightening, Insulation, and Ventilation*, Home Series 1, Iowa Energy Center, Ames, Iowa. www.energy.iastate.edu/homeseries/downloads/HomeSeries1.pdf

2009 International Residential Code For One- and Two-Family Dwellings. www.iccsafe.org

Jump, D. and M. Modera 1994. *Energy Impacts of Attic Duct Retrofits in Sacramento Houses*, LBL-35375, prepared by Lawrence Berkeley National Laboratory, for the U.S. Department of Energy, Washington, DC.

Karins, N.H., A. Tuluca, and M. Modera 1997. *Effectiveness of Duct Sealing and Duct Insulation in Multi-Family Buildings*. Prepared by Steven Winter Associates and Lawrence Berkeley National Laboratory for the New York State Energy Research and Development Authority and the U.S. Department of Energy.

Lstiburek, Joseph 2004a. *Builders Guides*. Guides to mixed humid, hot-dry, mixed-dry, and cold climates, for purchase at www.eeba.org/bookstore.

Lstiburek, Joseph W. 2004b. *Conditioned Crawl Space Construction, Performance and Codes*, Research Report – 0401, Building Science Corporation, www.building science.com

ICC Docket No. 13-0550
CUB-City Exhibit 1.2

Lstiburek, Joseph 2006. *EEBA Water Management Guide*, available for purchase at www.eeba.org/bookstore/prod-Water_Management_Guide-9.aspx

Lstiburek, Joseph 2008. *Concrete Floor Problems*, BSI-003, Building Science.com. www.buildingscience.com/documents/insights/bsi-003-concrete-floor-problems

Lstiburek, Joseph 2010. *Guide to Attic Air Sealing*. Prepared for U.S. Department of Energy by Building Science Corporation. www.buildingscience.com/documents/primers/guide-to-attic-air-sealing-with-details/?searchterm=air%20sealing

Lugano, Fred 1998. "First Step in Cellulose Sealing: Spot the Style," *Home Energy Magazine Online* May/June 1998, www.homeenergy.org/archive/hem.dis.anl.gov/eehem/98/980508.html

McCullough, Jeff J. and Kelly L. Gordon 2002. "High Hats, Swiss Cheese, and Fluorescent Lighting?" *Proceedings of the 2002 ACEEE Summer Study*, prepared by PNNL. www.aceee.org/conf/bldindex.htm

Moriarta, Courtney 2008. "Fixing Air Leakage in Connecticut Town Houses," *Home Energy Magazine* July/Aug 2008, p 28-30, www.swinter.com/news/documents/FixingAirLeakage.pdf&amp

ORNL. "Sealing Duct Leaks Saves Energy and Money," Oak Ridge National Laboratory, www.ornl.gov/info/ornlreview/rev28_2/text/duct.htm.

Sherman, M. H., I. S. Walker, and D.J. Dicerkhoff 2000. "Stopping Duct Quacks: Longevity of Residential Duct Sealants," in *Proceedings of the 2000 ACEEE Summer Study on Energy Efficiency in Buildings*, prepared by Lawrence Berkeley National Laboratory. www.osti.gov/bridge/product.biblio.jsp?query_id=1&page=3&osti_id=776574

Southface Energy Institute 1999. "Whole House Fan: Installing and using a whole house fan" Energy Technical Bulletin 10, Southface Energy Institute, Atlanta Georgia, www.southface.org/web/resources&services/publications/factsheets/housefan.pdf

Stovall, T. K., T. Petrie, J. Kosny, P.W. Childs, J.A. Atchley, and K. D. Hulvey 2007. "An Exploration of Wall Retrofit Best Practices," *Proceedings of the Thermal Performance of the Exterior Envelopes of Whole Buildings X Conference*, Clearwater Beach, FL, USA, Dec 02-07, 2007.

Tyrol, Mark D and Joe Pate 2007. Seal Fireplace Dampers with Weather Stripping to Conserve Energy, in *Proceedings of the 3rd International Conference on Environmental Science and Technology 2007*, August 5-9, 2007, Houston, Texas, prepared by Tyrol Engineering, LLC. http://hearth.com/econtent/index.php/wiki/Seal_Fireplace_Damper/

U.S. Department of Energy 1999. *Whole House Fan: How to Install and Use a Whole House Fan*, DOE/GO-10099-745, prepared by Southface Energy Institute and Oak Ridge National Laboratory for the U.S. Department of Energy. http://apps1.eere.energy.gov/buildings/publications/pdfs/building_america/26291.pdf

U.S. Department of Energy 2000a. *Air Sealing Fact Sheet*, Prepared by Southface Energy Institute and Oak Ridge National Laboratory. http://apps1.eere.energy.gov/buildings/publications/pdfs/building_america/26446.pdf

U.S. Department of Energy 2000b. *Attic Access Technology Fact Sheet*. Prepared by Southface Energy Institute and Oak Ridge National Laboratory. www.ornl.gov/sci/roofs+walls/insulation/fact%20sheets/attic%20access.pdf

U.S. Department of Energy 2009a. *Attic Access Insulation and Air Sealing*. www.energysavers.gov/your_home/insulation_airsealing/index.cfm/mytopic=11400

U.S. Department of Energy 2009b. "Energy Savers: Sealing Air Leaks," www1.eere.energy.gov/consumer/tips/air_leaks.html

U.S. Department of Energy 2009c. "Energy Savers: Your Home - Weather Stripping." DOE www.energysavers.gov/your_home/insulation_airsealing/index.cfm/mytopic=11280

U.S. Environmental Protection Agency 2008a. *A Do-It-Yourself Guide to Sealing and Insulating with ENERGY STAR*. EPA, May 2008, www.energystar.gov/index.cfm?c=diy.diy_index

U.S. Environmental Protection Agency 2008b. *ENERGY STAR Qualified Homes Thermal Bypass Checklist Guide*. www.energystar.gov/ia/partners/bldrs_lenders_raters/downloads/TBC_Guide_062507.pdf

U.S. Environmental Protection Agency 2008c. "Indoor Air Quality and Attics." www.epa.gov/iaq/homes/hip-attic.html

U.S. Environmental Protection Agency 2009a. *Duct Sealing*. EPA, Feb 2009, www.energystar.gov/ia/products/heat_cool/ducts/DuctSealingBrochure04.pdf

U.S. Environmental Protection Agency 2009b. *Model Standards and Techniques for Control of Radon in New Residential Buildings*. Cited 6/18/09. www.epa.gov/radon/pubs/newconst.html#Principles

U.S. Environmental Protection Agency 2009c. *Sealing Air Leaks: Basement* www.energystar.gov/index.cfm?c=diy.diy_sealing_basement

U.S. Environmental Protection Agency 2010. "Indoor airPLUS Building Professionals." www.epa.gov/indoorairplus/building_professionals.html

U.S. Environmental Protection Agency and U.S. Department of Energy 2010. *What to Expect from Home Performance with ENERGY STAR*, accessed 3/12/2010. www.energystar.gov/homeperformance

University of Illinois Extension Office "Five Steps to a Healthier Garage." http://web.extension.uiuc.edu/will/factsheets/family116.html

Visit our Web sites at:

www.buildingamerica.gov

www.pathnet.org

www.energystar.gov

Research and Development of Buildings

Our nation's buildings consume more energy than any other sector of the U.S. economy, including transportation and industry. Fortunately, the opportunities to reduce building energy use—and the associated environmental impacts—are significant.

DOE's Building Technologies Program works to improve the energy efficiency of our nation's buildings through innovative new technologies and better building practices. The program focuses on two key areas:

- Emerging Technologies
  Research and development of the next generation of energy-efficient components, materials, and equipment
- Technology Integration of new technologies with innovative building methods to optimize building performance and savings

Building America Program

George S. James • New Construction • 202-586-9472 • fax: 202-586-8134 • e-mail: George.James@ee.doe.gov

Lew Pratsch • Existing Homes • 202-586-1512 • fax: 202-586-8185 • e-mail: Lew.Pratsch@ee.doe.gov

Building America Program • Office of Building Technologies, EE-2J • U.S. Department of Energy • 1000 Independence Avenue, S.W. • Washington, D.C. 20585-0121 • www.buildingamerica.gov

Building Industry Research Alliance (BIRA)

Robert Hammon • ConSol • 7407 Tam O'Shanter Drive #200 • Stockton, CA 95210-3370 • 209-473-5000 • fax: 209-474-0817 • e-mail: Rob@consol.ws • www.bira.ws

Building Science Consortium (BSC)

Betsy Pettit • Building Science Consortium (BSC) • 70 Main Street • Westford, MA 01886 • 978-589-5100 • fax: 978-589-5103 • e-mail: Betsy@buildingscience.com • www.buildingscience.com

Consortium for Advanced Residential Buildings (CARB)

Steven Winter • Steven Winter Associates, Inc. • 50 Washington Street • Norwalk, CT 06854 • 203-857-0200 • fax: 203-852-0741 • e-mail: swinter@swinter.com • www.carb-swa.com

Davis Energy Group

David Springer • Davis Energy Group • 123 C Street • Davis, CA 95616 • 530-753-1100 • fax: 530-753-4125 • e-mail: springer@davisenergy.com • deg@davisenergy.com • www.davisenergy.com/index.html

IBACOS Consortium

Brad Oberg • IBACOS Consortium • 2214 Liberty Avenue • Pittsburgh, PA 15222 • 412-765-3664 • fax: 412-765-3738 • e-mail: boberg@ibacos.com • www.ibacos.com

Industrialized Housing Partnership (IHP)

Philip Fairey • Florida Solar Energy Center • 1679 Clearlake Road • Cocoa, FL 32922 • 321-638-1005 • fax: 321-638-1439 • e-mail: pfairey@fsec.ucf.edu • www.baihp.org

National Association of Home Builders (NAHB) Research Center

Tom Kenney • National Association of Home Builders (NAHB) Research Center • 400 Prince George's Boulevard • Upper Marlboro, MD 20774 • 301-430-6246 • fax: 301-430-6180 • toll-free: 800-638-8556 • www.nahbrc.org

National Renewable Energy Laboratory

Ren Anderson • 1617 Cole Boulevard, MS-2722 • Golden, CO 80401 • 303-384-7433 • fax: 303-384-7540 • e-mail: ren_anderson@nrel.gov • www.nrel.gov

Tim Merrigan • 1617 Cole Boulevard, MS-2722 • Golden, CO 80401 • 303-384-7349 • fax: 303-384-7540 • e-mail: tim_merrigan@nrel.gov • www.nrel.gov

Oak Ridge National Laboratory

Pat M. Love • P.O. Box 2008 • One Bethel Valley Road • Oak Ridge, TN 37831 • 865-574-4346 • fax: 865-574-9331 • e-mail: lovepm@ornl.gov • www.ornl.gov

Pacific Northwest National Laboratory

Michael Baechler • 620 SW 5th, Suite 810 • Portland, OR 97204 • 503-417-7553 • fax: 503-417-2175 • e-mail: michael.baechler@pnl.gov • www.pnl.gov

Produced for the U.S. Department of Energy (DOE) by Pacific Northwest National Laboratory, Contract DE-AC05-76RLO 1830.

Printed with a renewable-source ink on paper containing at least 50% wastepaper, including 20% postconsumer waste.

U.S. DEPARTMENT OF ENERGY

Energy Efficiency & Renewable Energy

EERE Information Center
1-877-EERE-INF (1-877-337-3463)
www.eere.energy.gov/informationcenter

PNNL-19284 April 12, 2010

For information on **Building America** visit **www.buildingamerica.gov**. The website contains expanded case studies, technical reports, and best practices guides.