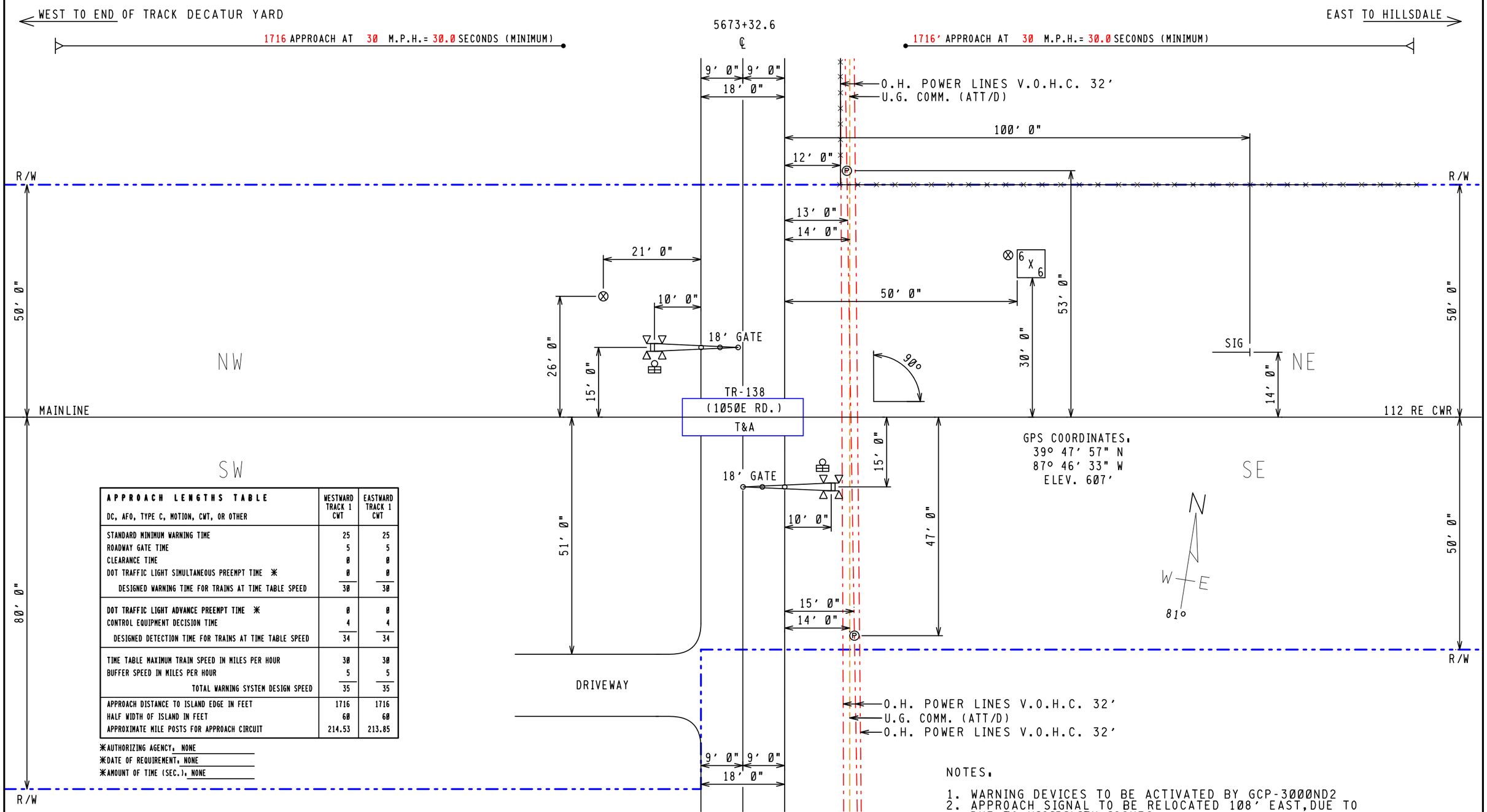

APPROACH LENGTHS TABLE DC, AFO, TYPE C, MOTION, CWT, OR OTHER	WESTWARD TRACK 1 CWT	EASTWARD TRACK 1 CWT
STANDARD MINIMUM WARNING TIME	25	25
ROADWAY GATE TIME	5	5
CLEARANCE TIME	0	0
DOT TRAFFIC LIGHT SIMULTANEOUS PREEMPT TIME *	0	0
DESIGNED WARNING TIME FOR TRAINS AT TIME TABLE SPEED	30	30
DOT TRAFFIC LIGHT ADVANCE PREEMPT TIME *	0	0
CONTROL EQUIPMENT DECISION TIME	4	4
DESIGNED DETECTION TIME FOR TRAINS AT TIME TABLE SPEED	34	34
TIME TABLE MAXIMUM TRAIN SPEED IN MILES PER HOUR	30	30
BUFFER SPEED IN MILES PER HOUR	5	5
TOTAL WARNING SYSTEM DESIGN SPEED	35	35
APPROACH DISTANCE TO ISLAND EDGE IN FEET	1716	1716
HALF WIDTH OF ISLAND IN FEET	60	60
APPROXIMATE MILE POSTS FOR APPROACH CIRCUIT	214.53	213.85

*AUTHORIZING AGENCY: NONE
*DATE OF REQUIREMENT: NONE
*AMOUNT OF TIME (SEC.): NONE

NOTES:

1. WARNING DEVICES TO BE ACTIVATED BY GCP-3000ND2
2. APPROACH SIGNAL TO BE RELOCATED 108' EAST,DUE TO DUE TO VISIBILITY ISSUES.

FILE NAME: BD21419.H01	REVISION DATES	PRODUCED FOR:	PRODUCED BY:	LEGEND	GUARD RAIL	METER SERVICE	STREET NAME: TR-138 (1050E RD.)
DATE DRAWN: 05/07/2013	05-24-2013 GRN	CSX TRANSPORTATION	invensys Rail	CSX ROW	O.H. POWER	POLE Ⓟ	CITY & STATE: METCALF, IL
DRAWN BY: MILLER, ROBERT	- -	RAIL TRANSPORT GROUP ENGINEERING	7775 BAYMEADOWS WAY	R/R POLELINE	FENCE	FIRE PLUG Ⓕ	PROJECT #: IL2013016
CHECKED BY: WILTSIE, JOE	- -	COMMUNICATIONS AND SIGNALS	SUITE 250	GAS	WATER	SEWER CAP Ⓢ	OP #: IL0396
SSC #: JXXD03665	- -		JACKSONVILLE, FL 32256	FIBER OPTIC	SEWER	GAS VENT Ⓥ	DOT #: 154492J

PROPOSED CROSSING LAYOUT
1"=20'

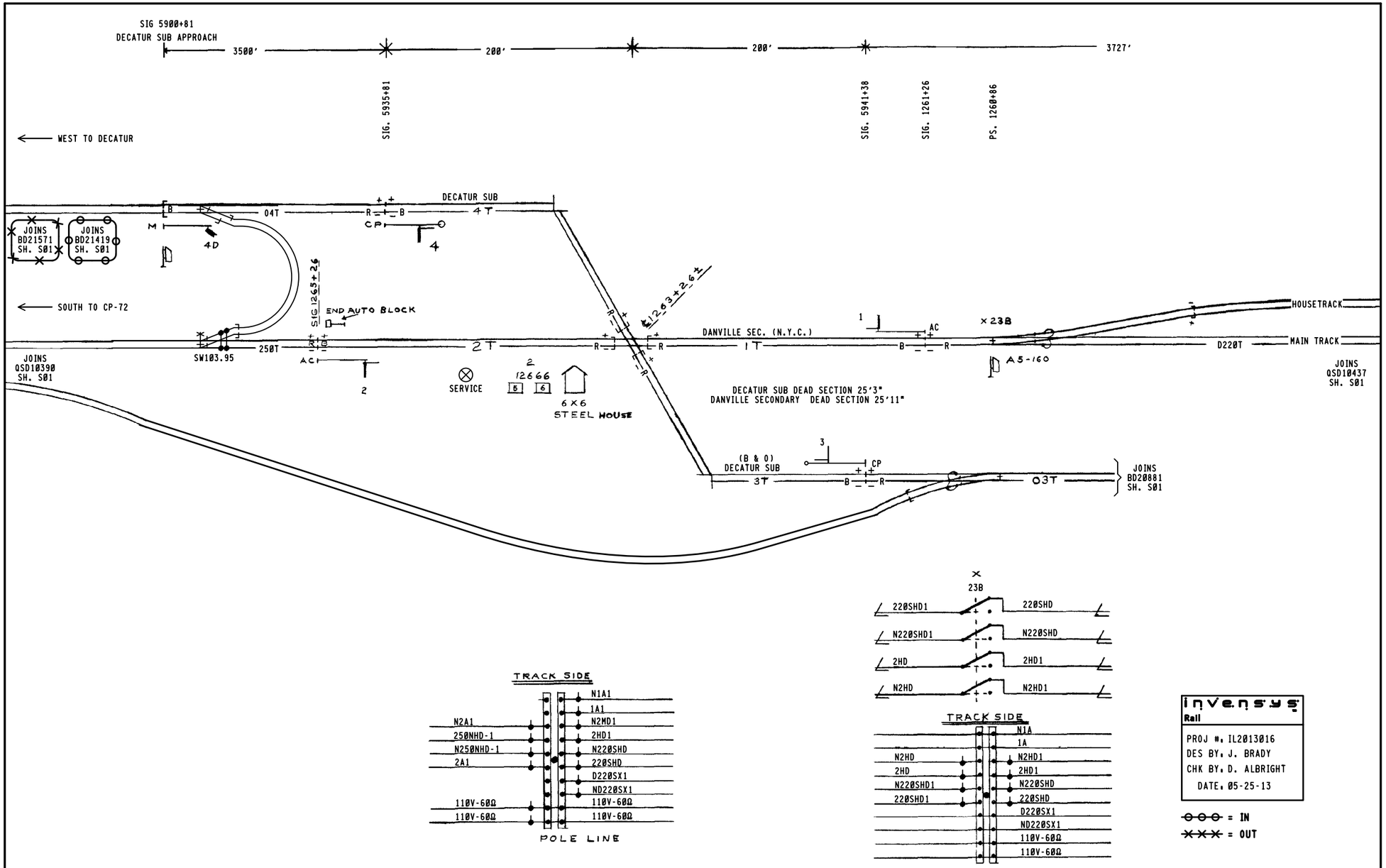

invensys Rail

PROJ #. IL2013016
DES BY. J. BRADY
CHK BY. D. ALBRIGHT
DATE. 05-25-13

⊖⊖⊖ = IN
⊗⊗⊗ = OUT

REVISIONS	
5-14-92	
09-29-99 VECTOR CREATED BY SWE	IL1999013
12-23-99 SWE	IL1999013
01-16-06 IRS IN2005069	
03-23-09 XRL	IN2009007
12-12-11 XRL	IL2011013

CSX TRANSPORTATION
RAIL TRANSPORT GROUP ENGINEERING
COMMUNICATIONS AND SIGNALS

CHRISMAN INTERLOCKING

TRACK, SIGNAL AND POLELINE PLAN
CHRISMAN, IL M.P. QSD-104.10

DESIGNED	DIGITIZED	CHECKED	DATE
CSX	SWE	CSX	09-29-99

DRAWING	SHEET NO	NEXT SH	NEXT FILE	NEXT SH	FILE	SHEET
-----	-----	-----	QSD10410	E01	QSD10410	S01

RASTER FILE. SWC00002.CIT

MS FILE: QSD10410.S01

INDEX

CONTENTS

SH. NO.		REVISION NO. 1	2	3	4	5	6	7	8	9
I01	INDEX AND REVISIONS									
S01	TRACK AND SIGNAL PLAN									
E01	POWER DISTRIBUTION									
C01	CROSSING DETECTION CIRCUITRY									
C02	DETECTION DEVICE PROGRAM									
C03	CROSSING WARNING DEVICE GATE CIRCUITRY									
C04	CROSSING WARNING DEVICE LIGHT CIRCUITRY									
C05	SEAR II CIRCUITS									
C06	SEAR II CONFIGURATION AND FUNCTIONS									
C07	SEAR II CHANNELS									
C08	WAYSIDE ACCESS GATEWAY									

= DESIGN COMPLETED

= REVISION COMPLETED

REVISIONS

REV. NO.	PROJECT NO.	DESIGN DATE	IN SERVICE DATE	REVISION DATE
1	IL2013016	05-25-13		

TO BE COMPLETED ON A.I.S.

NEW WORK

invensys Rail

PROJ #: IL2013016
DES BY: J. BRADY
CHK BY: D. ALBRIGHT
DATE: 05-25-13

= NOTE

3000ND2WSR.I01
REV. 03-29-13

CSX TRANSPORTATION

RAIL TRANSPORT GROUP ENGINEERING
COMMUNICATIONS AND SIGNALS

TR-138 (1050E RD.) 154492J

INDEX AND REVISIONS
METCALF, IL M.P. BD-214.19

DESIGNED	DIGITIZED	CHECKED	DATE
IRC/JWB	IRC/JWB	IRC/DBA	05-25-13

DESIGN DATE	REV. NO.	DRAWING	SHEET NO	FILE	SHEET
05-25-13	1	-----	-----	BD21419	I01

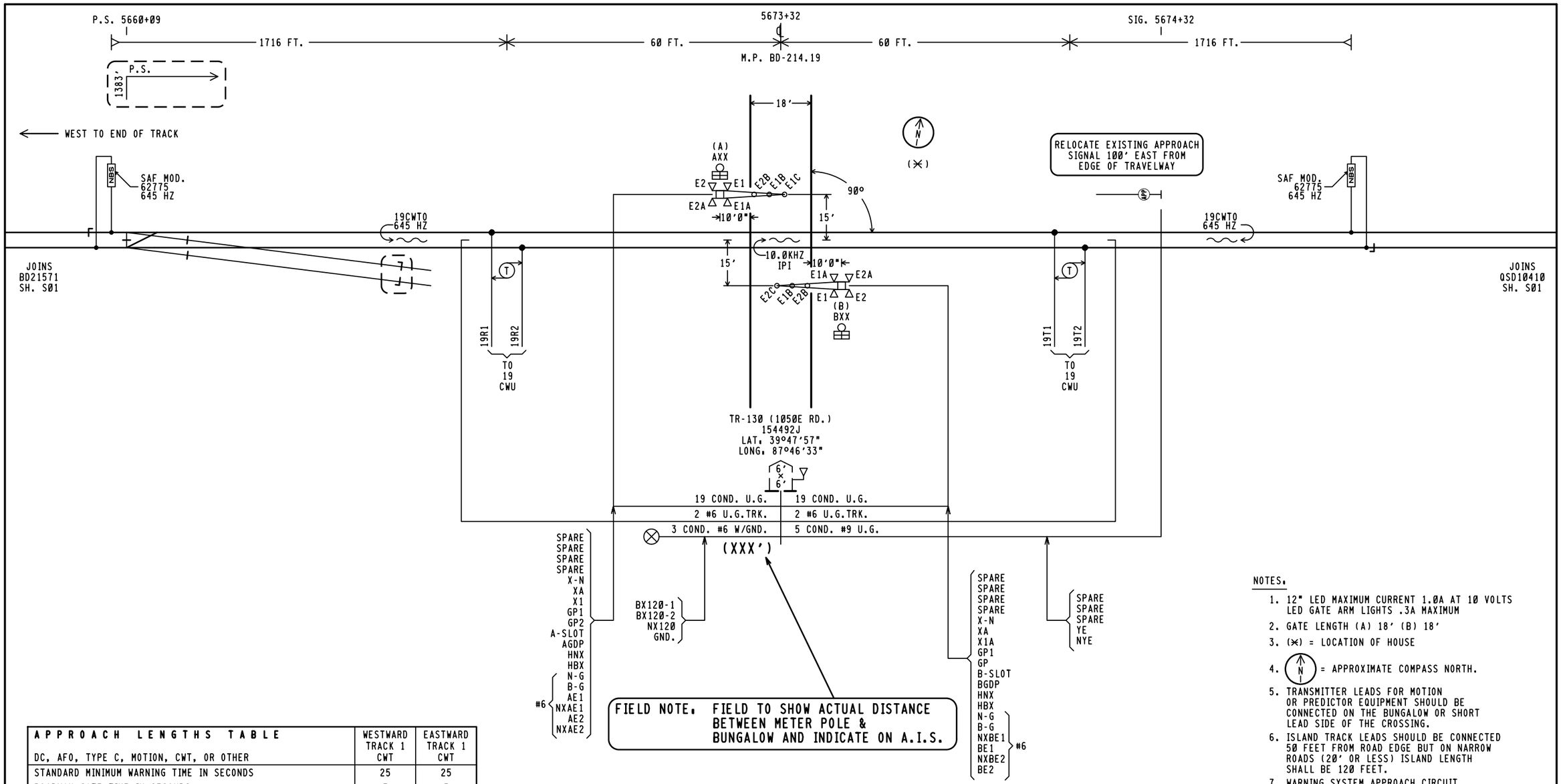

NOTES.

1. 12" LED MAXIMUM CURRENT 1.0A AT 10 VOLTS LED GATE ARM LIGHTS .3A MAXIMUM
2. GATE LENGTH (A) 18' (B) 18'
3. (✳) = LOCATION OF HOUSE
4. (N) = APPROXIMATE COMPASS NORTH.
5. TRANSMITTER LEADS FOR MOTION OR PREDICTOR EQUIPMENT SHOULD BE CONNECTED ON THE BUNGALOW OR SHORT LEAD SIDE OF THE CROSSING.
6. ISLAND TRACK LEADS SHOULD BE CONNECTED 50 FEET FROM ROAD EDGE BUT ON NARROW ROADS (20' OR LESS) ISLAND LENGTH SHALL BE 120 FEET.
7. WARNING SYSTEM APPROACH CIRCUIT DISTANCES ARE TO BE MEASURED FROM THE ISLAND TRACK CONNECTIONS.

APPROACH LENGTHS TABLE DC, AFO, TYPE C, MOTION, CWT, OR OTHER	WESTWARD TRACK 1 CWT	EASTWARD TRACK 1 CWT
STANDARD MINIMUM WARNING TIME IN SECONDS	25	25
ROADWAY GATE TIME IN SECONDS	5	5
CLEARANCE TIME IN SECONDS	0	0
DOT TRAFFIC LIGHT SIMULTANEOUS PREEMPT TIME IN SECONDS✳	0	0
DESIGNED WARNING TIME FOR TRAINS AT TIME TABLE SPEED	30 SEC.	30 SEC.
DOT TRAFFIC LIGHT ADVANCE PREEMPT TIME IN SECONDS ✳	0	0
CONTROL EQUIPMENT DECISION TIME IN SECONDS	4	4
DESIGNED DETECTION TIME FOR TRAINS AT TIME TABLE SPEED	34 SEC.	34 SEC.
TIME TABLE MAXIMUM TRAIN SPEED IN MILES PER HOUR	30	30
BUFFER SPEED IN MILES PER HOUR	5	5
TOTAL WARNING SYSTEM DESIGN SPEED IN MILES PER HOUR	35	35
APPROACH DISTANCE TO ISLAND EDGE IN FEET	1716	1716
HALF WIDTH OF ISLAND IN FEET	60	60
APPROXIMATE MILE POSTS FOR APPROACH CIRCUIT	214.53	213.35

✳AUTHORIZING AGENCY. NONE
✳DATE OF REQUIREMENT. NONE
✳AMOUNT OF TIME (SEC.). NONE

NEW WORK

invensys Rail

PROJ #. IL2013016
DES BY. J. BRADY
CHK BY. D. ALBRIGHT
DATE. 05-25-13

= NOTE

3000ND2WSR.S01
REV. 03-27-13

CSX TRANSPORTATION
RAIL TRANSPORT GROUP ENGINEERING
COMMUNICATIONS AND SIGNALS

TR-138 (1050E RD.) 154492J

TRACK AND SIGNAL PLAN
METCALF, IL M.P. BD-214.19

DESIGNED	DIGITIZED	CHECKED	DATE
IRC/JWB	IRC/JWB	IRC/DBA	05-25-13

DESIGN DATE	REV. NO.	DRAWING	SHEET NO	FILE	SHEET
05-25-13	1	-----	-----	BD21419	S01

TOP ROW

XR			XPR			GPR			EOR			POR			ACR		
12	FB	B8	22	F	B36	12	B	B82	12	FB	B81	12	FB	B62	12	B	B77
15	FB	C30	25	F	C30	15	B	C30	15	FB	C30	15	FB	C30	15	B	C30
22						22			32	FB		22	FB		22		
23						25			35	FB		25	FB		25	B	
25	F					32	F					32	F		32	B	
32						35	B					35			35	B	
35																	

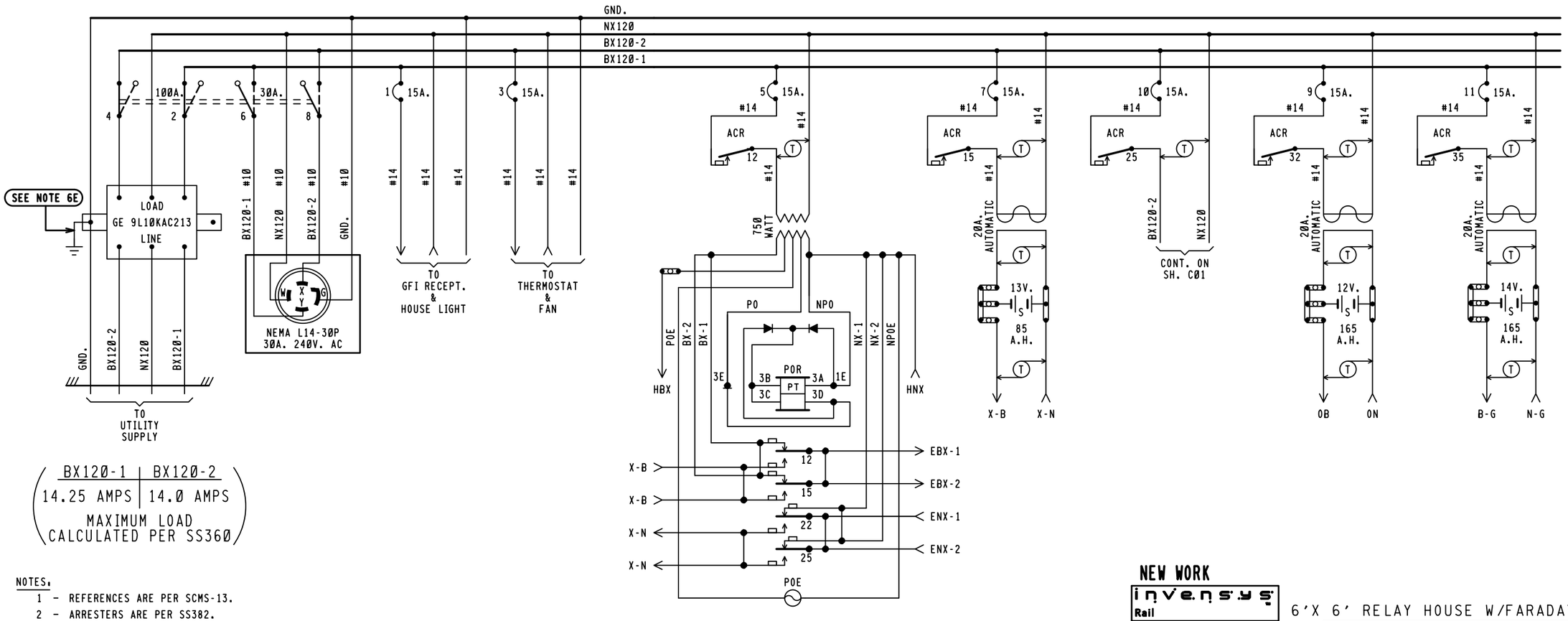

BX120-1	BX120-2
14.25 AMPS	14.0 AMPS

MAXIMUM LOAD
CALCULATED PER SS360

NOTES:

1 - REFERENCES ARE PER SCMS-13.
2 - ARRESTERS ARE PER SS382.
3 - SHELF RELAY PLACEMENT ON CONSIST CHART HAS NO SIGNIFICANCE.
4 - PLUG-IN RELAYS ARE VIEWED FROM THE FRONT OF RACK.
5 - BATTERY A.H. CAPACITY SHOWN IS THE MINIMUM REQUIREMENT.
6 - WIRING
  A - FEED TO ALL BUSSES, LIGHT CIRCUITS,MOTOR CIRCUITS TO BE #10 FLEX.
  B - 120-VOLT FEED FROM ENTRANCE TO POWER BUSS TO BE #10 FLEX.
  C - ALL TRACK WIRES TO BE #10 FLEX.
  D - ALL OTHERS TO BE #16 FLEX UNLESS NOTED.
  E - GROUND WIRE NOT NECESSARY WHEN GE ARRESTER IS MOUNTED ON GROUND PLANE OR METAL ENCLOSURE AFFIXED DIRECTLY TO BUNGALOW METALLIC STRUCTURAL MEMBER.
7 - CIRCUIT INTERRUPTERS 2 & 4 ARE MECHANICALLY INTERLOCKED WITH CIRCUIT INTERRUPTERS 6 & 8.

WILMORE DC-DC CONVERTER
MODEL 1675-12-12-15
INPUT + - → OB, ON
OUTPUT + - → B, N

NEW WORK

invensys Rail

PROJ #: IL2013016
DES BY: J. BRADY
CHK BY: D. ALBRIGHT
DATE: 05-25-13

6'X 6' RELAY HOUSE W/FARADAY SHIELD

CSX TRANSPORTATION
RAIL TRANSPORT GROUP ENGINEERING
COMMUNICATIONS AND SIGNALS

TR-138 (1050E RD.) 154492J

POWER DISTRIBUTION
METCALF, IL M.P. BD-214.19

= NOTE

3000ND2WSR.E01
REV. 03-29-13

DESIGNED	DIGITIZED	CHECKED	DATE
IRC/JWB	IRC/JWB	IRC/DBA	05-25-13

DESIGN DATE	REV. NO.	DRAWING	SHEET NO	FILE	SHEET
05-25-13	1	-----	-----	BD21419	E01

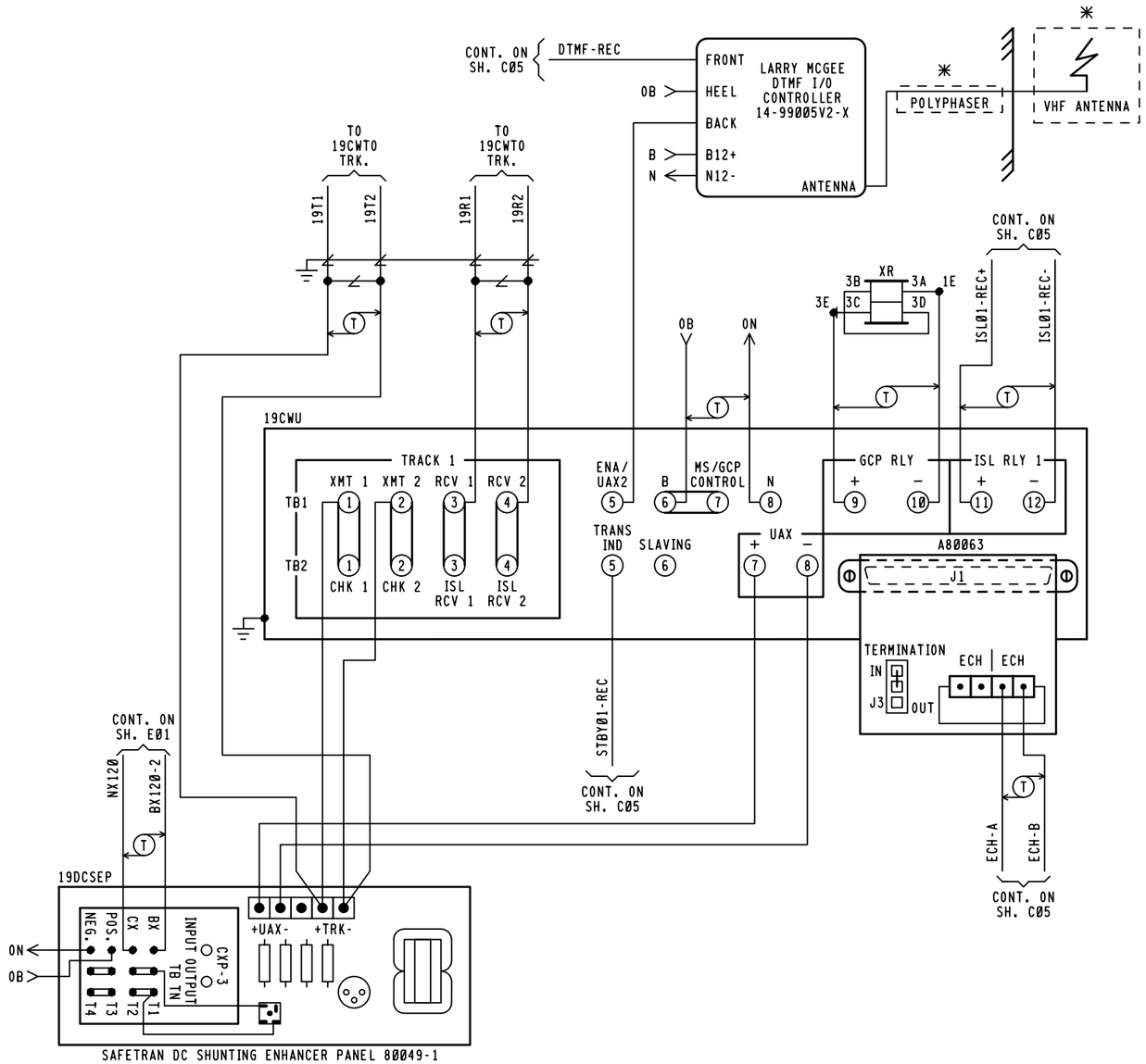

19CWU 3000ND2 MODULES REQUIRED

M1	M2	M3	M4	M5	M6	M7	M8	M9	M10	M11	M12
80211 IPI ISLAND (10.0KHZ)	80012 TRANSCEIVER	80013 RELAY DRIVE	80214 PROCESSOR	80255 RECORDER INTERFACE (NOTE 1)	80029 CONTROL INTERFACE	80255 RECORDER INTERFACE (NOTE 1)	80214 PROCESSOR	80013 RELAY DRIVE	80012 TRANSCEIVER	80211 IPI ISLAND (10.0KHZ)	80028 TRANSFER TIMER

FRONT VIEW

80153 PRINTED CIRCUIT BOARD LOCATED IN SLOT M6 BEHIND 80029

PROGRAMMING FOR DTMF RADIO

REMOTE DTMF CROSSING ACTIVATION
(ACTIVATES ENTIRE CROSSING)

TO ACTIVATE PRESS: 492#

TO DE-ACTIVATE PRESS: 492*

(ACTIVATION WILL TIME OUT AFTER 60 SEC.)

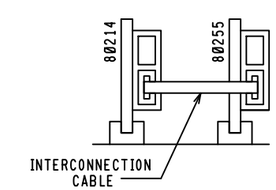

NOTES:

1. INTERCONNECTION CABLE MUST BE INSTALLED BETWEEN 80214 AND 80255 MODULES.

✳ = COMMUNICATIONS TO SUPPLY

MODULE A80063
NETWORK INTERFACE CONNECTOR

(J1)	(J3 JUMPER)	
ECH1	IN	TERMINATION
ECH2	OUT	ADD NODES

IPI
MODULE 80211

SLOT M1 & M11
10.0KHZ

PLACE SHORTING BLOCK ACROSS 10.0KHZ PIN PAIRS

MODULE 80028
S4 DIP SWITCH POSITIONS ✳

SWITCH #	16	8	4	2	1
SWITCH POSITION	UP	DOWN	UP	DOWN	UP

✳MAY BE SET PER FIELD CONDITIONS

MODULE 80028
S1 DIP SWITCH POSITIONS

SWITCH #	A	B	C	D
DAX USED	RIGHT	RIGHT	RIGHT	RIGHT

LEFT INDICATES DAX USED

SWITCH TO REMAIN IN THE RIGHT POSITION AT ALL TIMES

NEW WORK

invensys Rail

PROJ #: IL2013016
DES BY: J. BRADY
CHK BY: D. ALBRIGHT
DATE: 05-25-13

CSX TRANSPORTATION

RAIL TRANSPORT GROUP ENGINEERING
COMMUNICATIONS AND SIGNALS

TR-138 (1050E RD.) 154492J

CROSSING DETECTION CIRCUITRY
METCALF, IL M.P. BD-214.19

3000ND2WSR.C01
REV. 03-29-13

DESIGNED	DIGITIZED	CHECKED	DATE
IRC/JWB	IRC/JWB	IRC/DBA	05-25-13

DESIGN DATE	REV. NO.	DRAWING	SHEET NO	FILE	SHEET
05-25-13	1	-----	-----	BD21419	C01

3000 GCP APPLICATION DESIGN CARD

EQUIPMENT: 3000 ☐ 3000ND ☐ 3000D2 ☐ 3000ND2 ■

ISLAND FREQUENCY: T1: 10.0 KHZ T2: N/A KHZ 19 CWU

SOFTWARE LEVEL ..... (DISPLAYED DURING BOOT-UP)		☆☆	
NUMBER OF TRACKS (NUMBER OF TRANSCEIVER MODULES, 1 OR 2)		1 ■	2 ☐
FREQUENCY (MS/GCP)	T1:	645	HZ
	T2:	N/A	HZ
UNIDIRECTIONAL / BIDIRECTIONAL	T1:	UNI ☐	BI ■
	T2:	UNI ☐	BI ☐
XMIT LEVEL	T1:	HI ☐	MED ■
	T2:	HI ☐	MED ☐
PREDICTOR/MOTION SENSOR	T1:	PRED ■	MS ☐
	T2:	PRED ☐	MS ☐
WARNING TIME SELECTED	T1:	30	SEC.
	T2:	N/A	SEC.
APPROACH DISTANCE SELECTED	T1:	1716	FT.
	T2:	N/A	FT.
APPROACH DISTANCE COMPUTED	T1:	NOT REQUIRED *	
	T2:	NOT REQUIRED *	
UAX PICKUP DELAY (UAX1) (0 = OFF)...		1	SEC.
ENA/UAX2 DELAY (0 = ENA)		0	SEC.
ISLAND DISTANCE (BETWEEN FEED WIRES)	T1:	120 ☆	FT.
	T2:	N/A	FT.
NUMBER OF DAX'S		0 ■ 1 ☐ 2 ☐ 3 ☐ 4 ☐	
DAX A TRACK ASSIGNMENT		T1 ☐	T2 ☐
DAX A DISTANCE (0 = PREEMPT)			FT.
DAX A WARNING TIME			SEC.
DAX B TRACK ASSIGNMENT		T1 ☐	T2 ☐
DAX B DISTANCE (0 = PREEMPT)			FT.
DAX B WARNING TIME			SEC.
DAX C TRACK ASSIGNMENT		T1 ☐	T2 ☐
DAX C DISTANCE (0 = PREEMPT)			FT.
DAX C WARNING TIME			SEC.
DAX D TRACK ASSIGNMENT		T1 ☐	T2 ☐
DAX D DISTANCE (0 = PREEMPT)			FT.
DAX D WARNING TIME			SEC.
SLAVING MASTER/SLAVE		MASTER ■	SLAVE ☐
PASSWORD ENABLED		DISABLED ■	ENABLED ☐
RECORDER INSTALLED		NOT INSTALLED ■	INSTALLED ☐
RS-232-C BAUD RATE			BPS
RS-232-C DATE BITES		7 ☐	8 ☐
RS-232-C STOP BITS		1 ☐	2 ☐
RS-232-C PARITY		NONE ☐	MARK ☐
		ODD ☐ EVEN ☐	SPACE ☐
DATE (E.G.,MON 13 MAY 1991) ..		NOT REQUIRED *	
TIME (E.G.,06:25:43 PM)		NOT REQUIRED *	
DAYLIGHT SAVINGS		ON ■	OFF ☐

EXPANDED PROGRAMMING DESIGN

SWITCH TO MS (ENTER EZ VALUE).....	T1:	10	EZ
	T2:	N/A	EZ
TRANSFER DELAY MS TO GCP (0 = OFF)..	T1:	0	SEC.
	T2:	N/A	SEC.
PRIME PREDICTION OFFSET (0 = OFF)..	T1:	0	FT.
	T2:	N/A	FT.
PICKUP DELAY PRIME		15	SEC.
PICKUP DELAY DAX A		0	SEC.
PICKUP DELAY DAX B		0	SEC.
PICKUP DELAY DAX C		0	SEC.
PICKUP DELAY DAX D		0	SEC.
COMPENSATION VALUE	T1:	NOT REQUIRED **	
COMPENSATION VALUE	T2:	NOT REQUIRED **	
ENHANCED DETECTION (ED).....	T1:	ON ■	OFF ☐
	T2:	ON ☐	OFF ■
BACK TO BACK T1 AND T2 ..... (WHEN ED IS ON)		NO ■	YES ☐
STATION STOP TIMER ..... (WHEN ED IS ON)	T1:	N/A (SEE NOTE1)	SEC.
	T2:	N/A	SEC.
# OF TRACK WIRES - 4 OR 6	T1:	4 ■	6 ☐
	T2:	4 ☐	6 ☐
LOW EX ADJUSTMENT	T1:	0	
	T2:	N/A	
LOW EZ DETECTION	T1:	ON ☐	OFF ■
	T2:	ON ☐	OFF ☐
LOW EZ DETECTION TIMER	T1:	N/A (SEE NOTE2)	MIN.
	T2:	N/A	MIN.
POSITIVE START (0 = OFF)..... (ENTER EZ VALUE)	T1:	0	EZ
	T2:	N/A	EZ
POSITIVE START TIMEOUT (0 = NONE)... (WHEN POTISIVE START IS ON)	T1:	0	MIN.
	T2:	N/A	MIN.
SET AT OPERATION		NORMAL ■	DIAGNOSTIC ☐
DIAGNOSTIC MESSAGES		ON ■	OFF ☐
DAX MESSAGES ..... (SEE NOTE 3)		ON ☐	OFF ■
ADVANCE PREEMP TIMER (0 = OFF).....		0	SEC.

** THE COMPENSATION VALUE IS PROVIDED BY THE 3000 GCP SYSTEM AND NO ADDITIONAL PROGRAMMING IS NORMALLY REQUIRED.

* PROGRAMMED AT INSTALLATION DURING CALIBRATION PROCEDURE

☆ = 120' MINIMUM ISLAND DISTANCE TO BE ENTERED BY FIELD PERSONNEL FOR NON-DAXING APPLICATIONS WHEN ROAD IS 20' OR LESS WIDE.

☆☆ = INDICATE ON AS-IN-SERVICE DRAWINGS

NOTES:

1. WHEN ED SET TO OFF, DEFAULT NOT DISPLAYED
   WHEN ED SET TO ON, DEFAULT IS 10 SEC.
2. WHEN LOW EZ DETECTION SET TO OFF, DEFAULT NOT DISPLAYED
   WHEN LOW EZ DETECTION SET TO ON, DEFAULT IS 10 MIN.
3. WHEN A 3000D2 WITH DAX, SET DAX MESSAGES ON.
4. NODES ARE ASSIGNED BY SEAR II UNIT PER TABLE.

NEW WORK

invensys Rail

PROJ #: IL2013016
DES BY: J. BRADY
CHK BY: D. ALBRIGHT
DATE: 05-25-13

CSX TRANSPORTATION
RAIL TRANSPORT GROUP ENGINEERING
COMMUNICATIONS AND SIGNALS

TR-138 (1050E RD.) 154492J

DETECTION DEVICE PROGRAM
METCALF, IL M.P. BD-214.19

3000ND2WSR.C02
REV. 03-29-13

DESIGNED	DIGITIZED	CHECKED	DATE
IRC/JWB	IRC/JWB	IRC/DBA	05-25-13

DESIGN DATE	REV. NO.	DRAWING	SHEET NO	FILE	SHEET
05-25-13	1	-----	-----	BD21419	C02

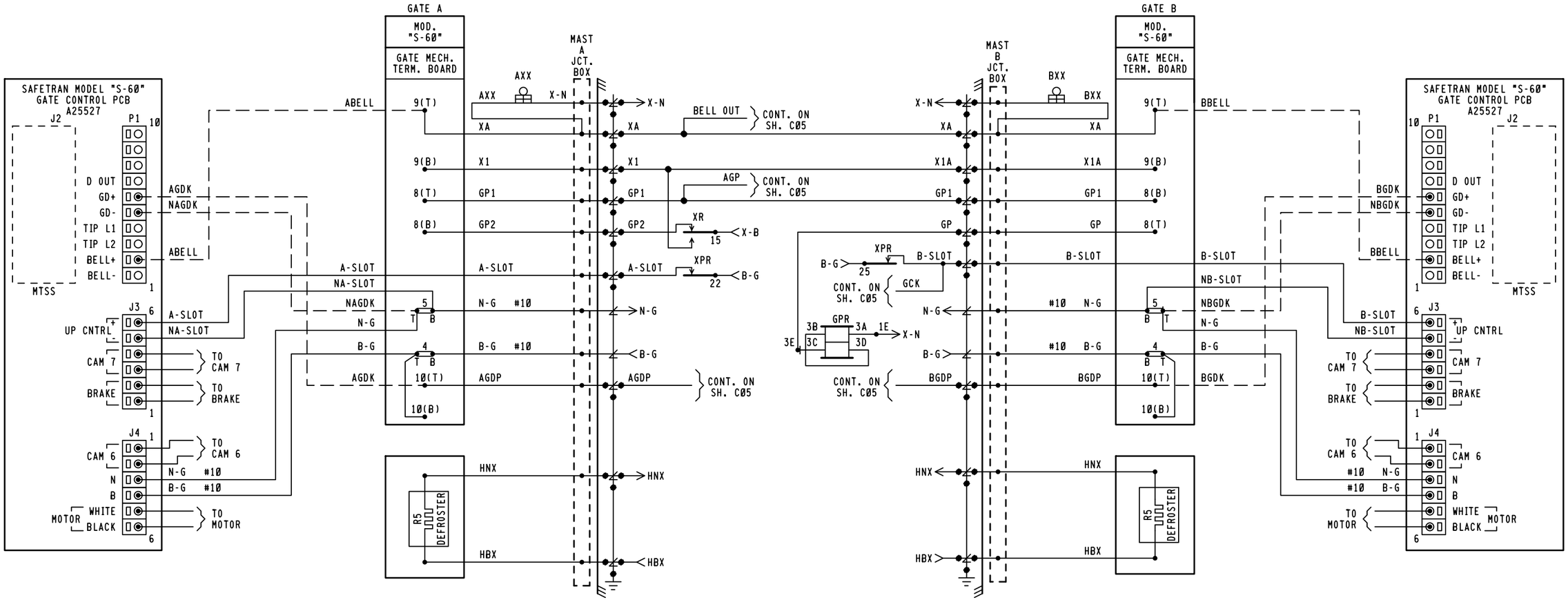

NEW WORK

invensys Rail

PROJ #: IL2013016
DES BY: J. BRADY
CHK BY: D. ALBRIGHT
DATE: 05-25-13

CSX TRANSPORTATION
RAIL TRANSPORT GROUP ENGINEERING
COMMUNICATIONS AND SIGNALS

TR-138 (1050E RD.) 154492J

CROSSING WARNING DEVICE GATE CIRCUITRY
METCALF, IL M.P. BD-214.19

3000ND2WSR.C03
REV. 03-29-13

DESIGNED	DIGITIZED	CHECKED	DATE
IRC/JWB	IRC/JWB	IRC/DBA	05-25-13

DESIGN DATE	REV. NO.	DRAWING	SHEET NO	FILE	SHEET
05-25-13	1	-----	-----	BD21419	C03

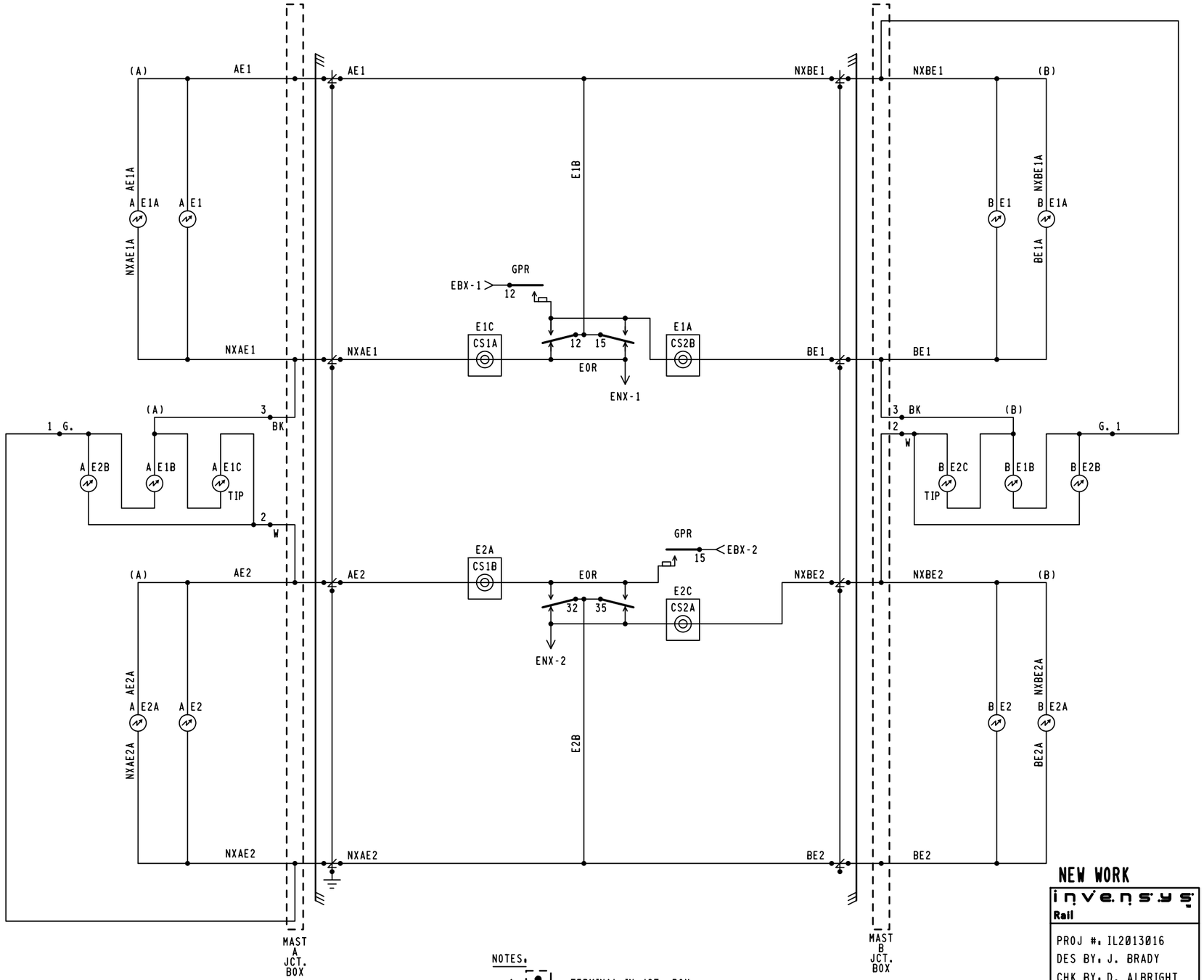

NOTES:

1. = TERMINAL IN JCT. BOX
2. WHEN 7 OR MORE LIGHTS ON A SINGLE STRUCTURE REFER TO SS-382 FOR REQUIRED ARRESTER RATING.

NEW WORK

invensys Rail

PROJ #: IL2013016
DES BY: J. BRADY
CHK BY: D. ALBRIGHT
DATE: 05-25-13

3000ND2WSR.C04
REV. 03-29-13

CSX TRANSPORTATION
RAIL TRANSPORT GROUP ENGINEERING
COMMUNICATIONS AND SIGNALS

TR-138 (1050E RD.) 154492J

CROSSING WARNING DEVICE LIGHT CIRCUITRY
METCALF, IL M.P. BD-214.19

DESIGNED	DIGITIZED	CHECKED	DATE
IRC/JWB	IRC/JWB	IRC/DBA	05-25-13

DESIGN DATE	REV. NO.	DRAWING	SHEET NO	FILE	SHEET
05-25-13	1	-----	-----	BD21419	C04

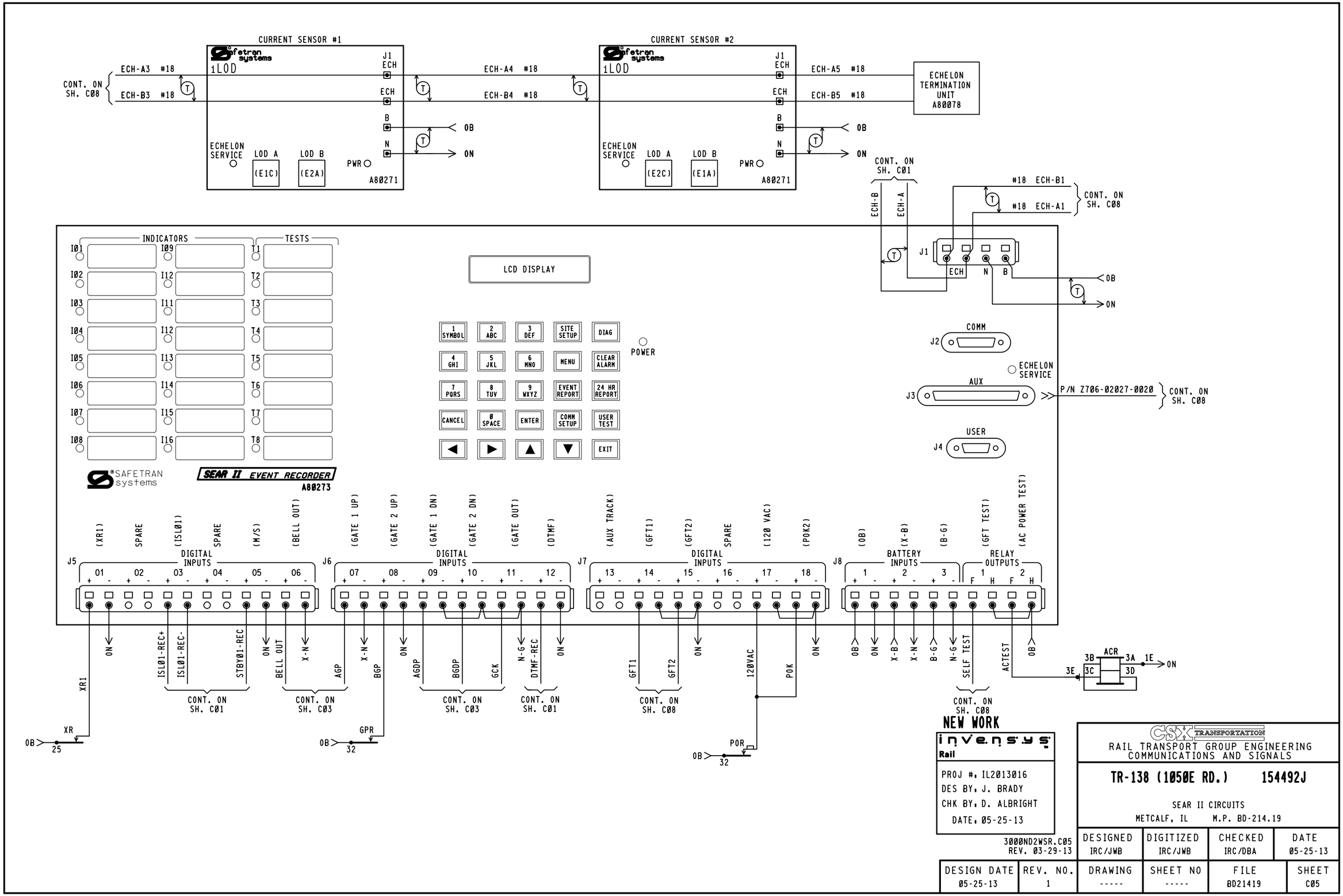
CURRENT SENSOR #1
CURRENT SENSOR #2
safetran systems
iLOD
J1
ECH
B
N
ECHELON SERVICE
LOD A
LOD B
(E1C)
(E2A)
(E2C)
(E1A)
PWR
A80271
CONT. ON SH. C08
ECH-A3 #18
ECH-B3 #18
ECH-A4 #18
ECH-B4 #18
ECH-A5 #18
ECH-B5 #18
ECHELON TERMINATION UNIT A80078
OB
ON
CONT. ON SH. C01
ECH-B
ECH-A
#18 ECH-B1
#18 ECH-A1
INDICATORS
TESTS
LCD DISPLAY
POWER
SAFETRAN systems
SEAR II EVENT RECORDER
A80273
COMM
J2
ECHELON SERVICE
AUX
J3
P/N Z706-02027-0020
USER
J4
(XR1)
SPARE
(ISL01)
SPARE
(M/S)
(BELL OUT)
(GATE 1 UP)
(GATE 2 UP)
(GATE 1 DN)
(GATE 2 DN)
(GATE OUT)
(DTMF)
(AUX TRACK)
(GFT1)
(GFT2)
SPARE
(120 VAC)
(POK2)
(OB)
(X-B)
(B-G)
(GFT TEST)
(AC POWER TEST)
DIGITAL INPUTS
BATTERY INPUTS
RELAY OUTPUTS
J5
J6
J7
J8
ISL01-REC+
ISL01-REC-
STBY01-REC
BELL OUT
X-N
AGP
BGP
AGDP
BGDP
GCK
N-G
DTMF-REC
GFT1
GFT2
120VAC
POK
SELF TEST
ACTEST
ACR
XR1
XR
GPR
POR
CONT. ON SH. C01
CONT. ON SH. C03
CONT. ON SH. C08
NEW WORK
invensys Rail
PROJ #. IL2013016
DES BY. J. BRADY
CHK BY. D. ALBRIGHT
DATE. 05-25-13
3000ND2WSR.C05
REV. 03-29-13
CSX TRANSPORTATION
RAIL TRANSPORT GROUP ENGINEERING
COMMUNICATIONS AND SIGNALS
TR-138 (1050E RD.) 154492J
SEAR II CIRCUITS
METCALF, IL M.P. BD-214.19
DESIGNED IRC/JWB
DIGITIZED IRC/JWB
CHECKED IRC/DBA
DATE 05-25-13
DESIGN DATE 05-25-13
REV. NO. 1
DRAWING -----
SHEET NO -----
FILE BD21419
SHEET C05

	DEFAULTS AND/OR STYLE	FIELD RECORD
SEAR II EXECUTIVE PROGRAM	VERSION: 9V645A01Y	VERSION:
APPLICATION PROGRAM (IF LOADED)	VERSION: 9V736-A02A	VERSION:

SITE SET UP OPTIONS		
OPTION	SELECTION	
DATE	XX-XX-XXXX	
TIME	[XX:XX:XX]	
DAYLIGHT SAVINGS TIME	YES ■ NO ☐	
TIME ZONE	■ EST ☐ CST	
SITE NAME	TR-138	
MILEPOST	BD-214.19	
DOT NUMBER	154492J	
TESTER TYPE	■ CROSSING ☐ WAYSIDE	
DATE FORMAT	■ MM-DD-YYYY ☐ DD-MM-YYYY	
TEMP FORMAT	■ FAHRENHEIT ☐ CELSIUS	
INDICATE HOLDOFF	0	
INDICATE REFRESH	60	
SITE TYPE	☐ NO COMMUNICATION ☐ DIAL-UP ■ COLLECTOR ☐ NODE ☐ BULLHORN/MODE ☐ CDS902X	
SITE ATCS ADDRESS	7.125.472.005.99.02 (7.RRR.LLL.GGG.99.01)	NOTE 4
OFFICE ADDRESS	2.125.00.0000 (2.RRR.NN.DDDD)	
OFFICE SITE ADDRESS	NA	
BACK UP SITE ADDRESS 1	NA	
BACK UP SITE ADDRESS 2	NA	
POLL ID (1-99)	1	
GEN/ATCS MODE	☐ GENISYS ■ GEN/ATCS	
XID DISABLED	■ YES ☐ NO	
OFFICE COM. DEVICE	☐ DIRECT ☐ MCM (RS232) ☐ MCM (ECH) ■ WAG (ECHELON) ☐ DIAL UP (RS232) ☐ S200 RADIO (RS422)	NOTE 5
RADIO ATCS ADDRESS	7.125.472.005.99.02	
OFFICE PHONE NUMBER	1-XXX-XXX-XXXX	
INIT. STRING		
FIELD COMM	☐ VHF (ECH) ☐ VHF (RS232) ☐ WAG (ECH) ☐ SS (RS232) ■ NONE	
USER PORT	BAUD RATE (9600)	
AUX PORT	BAUD RATE (9600)	NOTE 6
COMM PORT	BAUD RATE (9600)	

NOTES:

1. LARGE CONFIGURATION ASSIGNS RECORDER INPUTS FOR USE WHEN DIGITAL I/O MODULE REQUIRED.
2. IF WARNING DEVICE = NONE MAIN/STANDBY OPTION NOT SHOWN.
3. IF VHF COMMUNICATIONS = NO THEN DTMF ACTIVATION AND CHANNEL OPTIONS ARE NOT SHOWN.
4. DEFAULT ADDRESS 7.620.100.100.99.01 USED FOR STAND ALONE LOCATIONS.
5. OPTIONS NOT SHOWN IF SITE TYPE = NO COMMUNICATIONS.
6. FORMAT AS: BAUD, DATA BITS, PARITY STOP BITS, FLOW CONTROL.

SITE SET UP OPTIONS CONT.		
	OPTION	SELECTION
	RAILROAD NUMBER	125
NOTE 1	CROSSING CONFIGURATION	STANDARD ■ LARGE ☐ REMOTE ☐ SPLIT GATE ☐ ISL ONLY ☐ CP COLLECTOR ☐
	NUMBER OF XR INPUTS	0 ☐ 1 ■ 2 ☐ 3 ☐ 4 ☐
	NUMBER OF ISL INPUTS	0 ☐ 1 ■ 2 ☐ 3 ☐ 4 ☐
	CONSTANT WARNING DEVICE	GCP ■ OTHER ☐ NONE ☐
	TOTAL NUMBER OF GCP NODES	1 ■ 2 ☐ 3 ☐ 4 ☐ 5 ☐
	NUMBER OF REDUNDANT GCP	1 ■ 2 ☐ 3 ☐ 4 ☐
	CROSSING CONTROLLER 1	SSCC IIIA / PLUS ☐ SSCC IV ☐ OTHER ☐ NONE ■
	POK2	YES ■ NO ☐
NOTE 2	MAIN / STANDBY	YES ■ NO ☐
	AUXILLARY TRACKS	0 ■ 1 ☐ 2 ☐
	ENTRANCE GATE	0 ☐ 1 ☐ 2 ■
	GATE POSITION FAIL 10-60 SEC	30
	NUMBER OF UAX INPUTS	0 ■ 1 ☐ 2 ☐
	BATTERY BANKS	1 ☐ 2 ☐ 3 ■ 4 ☐ 5 ☐ 6 ☐
	OB RESOLUTION	.2 ■ .5 ☐ 1.0 ☐
	X-B RESOLUTION	.2 ■ .5 ☐ 1.0 ☐ NOT PRESENT ☐
	B-G RESOLUTION	.2 ☐ .5 ☐ 1.0 ■ NOT PRESENT ☐
	X-B2 RESOLUTION	.2 ☐ .5 ☐ 1.0 ☐ NOT PRESENT ■
	B-G2 RESOLUTION	.2 ☐ .5 ☐ 1.0 ☐ NOT PRESENT ■
	X-B3 RESOLUTION	.2 ☐ .5 ☐ 1.0 ☐ NOT PRESENT ■
	PREEMPTION	NORMAL ☐ ADVANCED ☐ NO ■
	KDR INPUT	YES ■ NO ☐
NOTE 3	VHF COMMUNICATOR	YES ☐ NO ■
	iLOD MODULES	0 ☐ 1 ☐ 2 ■ 3 ☐ 4 ☐ 5 ☐ 6 ☐
	ANY LED BULBS	NO ☐ YES ■
	AUTO INSPECTIONS	YES ■ NO ☐
	BELL ON	GATES LOWERING ■ GATES MOVING ☐ ALWAYS ☐
	GROUND FAULT DETECTORS	YES ■ NO ☐
	BATTERIES ON GFT1	1 ☐ 2 ■
	FULL APPROACH MOVE ALARMS	ACTIVATED ■ DO NOT ACTIVATE ☐

LIT BULB COUNT ON EACH CIRCUIT	NO.	TYPE OF BULB	CURRENT READING IN AMP. AT APPROX. 10.0 V BULB VOLTAGE
CURRENT SENSOR (1) E1C, LAMP SET UP	1A	☐BULBS ■LED	2.6
CURRENT SENSOR (1) E2A, LAMP SET UP	1B	☐BULBS ■LED	2.6
CURRENT SENSOR (2) E2C, LAMP SET UP	2A	☐BULBS ■LED	2.6
CURRENT SENSOR (2) E1A, LAMP SET UP	2B	☐BULBS ■LED	2.6

MEASURE BATTERY VOLTAGE AT INPUT	
BATTERY VOLTAGE OB	XXXX VOLTS
BATTERY VOLTAGE X-B	XXXX VOLTS
BATTERY VOLTAGE B-G	XXXX VOLTS

NEW WORK

invensys Rail

PROJ #: IL2013016
DES BY: J. BRADY
CHK BY: D. ALBRIGHT
DATE: 05-25-13

CSX TRANSPORTATION
RAIL TRANSPORT GROUP ENGINEERING
COMMUNICATIONS AND SIGNALS

TR-138 (1050E RD.) 154492J

SEAR II CONFIGURATION AND FUNCTIONS
METCALF, IL M.P. BD-214.19

3000ND2WSR.C06
REV. 03-29-13

DESIGNED	DIGITIZED	CHECKED	DATE
IRC/JWB	IRC/JWB	IRC/DBA	05-25-13

DESIGN DATE	REV. NO.	DRAWING	SHEET NO	FILE	SHEET
05-25-13	1	-----	-----	BD21419	C06

DISCRETE INPUTS	DI 01	DI 02	DI 03	DI 04	DI 05	DI 06
CHANNEL	1	2	3	4	5	6
NAME	XR1		ISLAND 1 (TRACK)		STANDBY	BELL OUT (BELL PWR)
TAG	XR1 (XR)	SP	ISL1	SP	M/S	BELL OUT (BELL PWR)
OFF NAME	DOWN (XR)		DOWN (ISL1)		DOWN (STANDBY)	OFF (BELL PWR)
ON NAME	UP (XR)		UP (ISL1)		UP (MAIN)	ON (BELL PWR)
ON DEBOUNCE TIME	100 ms	1000 ms	100 ms	1000 ms	100 ms	100 ms
OFF DEBOUNCE TIME	100 ms	1000 ms	100 ms	1000 ms	100 ms	100 ms
TOGGLE PERIOD	1000 ms	1000 ms	1000 ms	1000 ms	1000 ms	1000 ms

TSS INPUTS	DI 07	DI 08	DI 09	DI 10
CHANNEL	7	8	9	10
NAME	AGP	BGP	AGDP	BGDP
TAG	AGP (GP)	BGP (GP)	AGDP	BGDP
OFF NAME	LIGHTS FLASH	LIGHTS FLASH	NOT HORIZ	NOT HORIZ
ON NAME	GATE VERTICAL	GATE VERTICAL	GATE HORIZ	GATE HORIZ
ON DEBOUNCE TIME	100 ms	100 ms	100 ms	100 ms
OFF DEBOUNCE TIME	100 ms	100 ms	100 ms	100 ms
TOGGLE PERIOD	1000 ms	1000 ms	1000 ms	1000 ms

DISCRETE INPUTS	DI 11	DI 12	DI 13
CHANNEL	11	12	13
NAME	GATE CONTROL	DTMF	
TAG	GCOUT1 (GCK)	DTMF-REC	SP
OFF NAME	OFF (DESCENT)	OFF (NO GATE KEYED)	
ON NAME	ON (ASCENT ON)	ON (ACTIVATE)	
ON DEBOUNCE TIME	100 ms	100 ms	1000 ms
OFF DEBOUNCE TIME	100 ms	100 ms	1000 ms
TOGGLE PERIOD	1000 ms	1000 ms	1000 ms

GFT INPUTS	DI 14	DI 15
CHANNEL	14	15
NAME	GND FAULT TESTER 1 (GFT1,2)	GND FAULT TESTER 2 (GFT3,4)
TAG	GFT1 (GFT1 DATA)	GFT2 (GFT2 DATA)
BATTERY 1 NAME	OB (GND FAULT)	B-G (GND FAULT)
BATTERY 1 TAG	OB (GND FAULT)	B-G (GND FAULT)
BATTERY 2 NAME	X-B (GND FAULT)	SP.
BATTERY 2 TAG	X-B (GND FAULT)	SP.

DISCRETE INPUTS	DI 16	DI 17	DI 18
CHANNEL	16	17	18
NAME		120 VAC	POK2
TAG	SP	120 VAC	POK2
OFF NAME		OFF (ALL POWER OFF)	OFF (ALL POWER OFF)
ON NAME		ON (ALL POWER ON)	ON (ALL POWER ON)
ON DEBOUNCE TIME	1000 ms	100 ms	100 ms
OFF DEBOUNCE TIME	1000 ms	100 ms	100 ms
TOGGLE PERIOD	1000 ms	1000 ms	1000 ms

BATTERY INPUTS	BI1	BI2	BI3
CHANNEL	1	2	3
NAME	OB (ELECTRONIC BATT)	X-B (BULB BATT)	B-G (GATE BATT)
TAG	OB	X-B	B-G
SAMPLE PERIOD (ms)	500 (ms)	500 (ms)	500 (ms)
RESOLUTION (V)	0.2 (VOLTS)	0.2 (VOLTS)	1.0 (VOLTS)
AVGERAGING SAMPLES	32 SAMPLES	32 SAMPLES	32 SAMPLES

RELAYS	R01	R02
CHANNEL	1	2
NAME	GFT TEST	AC POWER TEST (ACRLY)
TAG	SELF TEST	AC POWER TEST (ACRLY)
OFF STATE NAME	NOT TESTING	OFF (ACR DN)
ON STATE NAME	TESTING	ON (ACR UP)
UNKNOWN STATE NAME	PULSE	PULSE
ON PULSE TIME (s)	1 (s)	1 (s)
OFF PULSE TIME (s)	1 (s)	1 (s)
TOGGLE PERIOD (s)	1 (s)	1 (s)
DUTY CYCLE	50	50

NOTE. ( ) DENOTES NOMENCLATURE FOR CLARIFICATION AND WILL NOT DISPLAY ON LOG REPORTS.

NEW WORK

invensys Rail

PROJ #. IL2013016
DES BY. J. BRADY
CHK BY. D. ALBRIGHT
DATE. 05-25-13

CSX TRANSPORTATION
RAIL TRANSPORT GROUP ENGINEERING
COMMUNICATIONS AND SIGNALS

TR-138 (1050E RD.) 154492J

SEAR II CHANNELS
METCALF, IL M.P. BD-214.19

3000ND2WSR.C07
REV. 03-29-13

DESIGNED	DIGITIZED	CHECKED	DATE
IRC/JWB	IRC/JWB	IRC/DBA	05-25-13

DESIGN DATE	REV. NO.	DRAWING	SHEET NO	FILE	SHEET
05-25-13	1	-----	-----	BD21419	C07

WAYSIDE ACCESS GATEWAY CONFIGURATION	
SITE ATCS ADDRESS	7.125.472.005.01.01 7.125.LLL.GGG.SS.DD
SERIAL INTERFACE	9600,NONE,8,1/NOFLOW
SERIAL FORMAT	RAW
WAG TEST MODE	DISABLED
ECHELON ADDRESS	01.01
UDP PORTS	5000, 5001, 5002, 5003
ROUTE TABLE EXPIRY	5400 SEC
BROADCAST MEDIUM	IP ETHERNET
TCP PORTS	6001
DHCP SERVER	DISABLED
IP ADDRESS	192.168.13.1
TYPE 7 ROUTE LENGTH	12--7RRRLLLGGGSS
IP NETWORK MASK	255.255.255.000

NOTE TO INSPECTOR,
AT INSTALLATION OF CDMA BY COM.
MARK-UP CONFIGURATION TABLE FOR
AS IN SERVICE PLANS

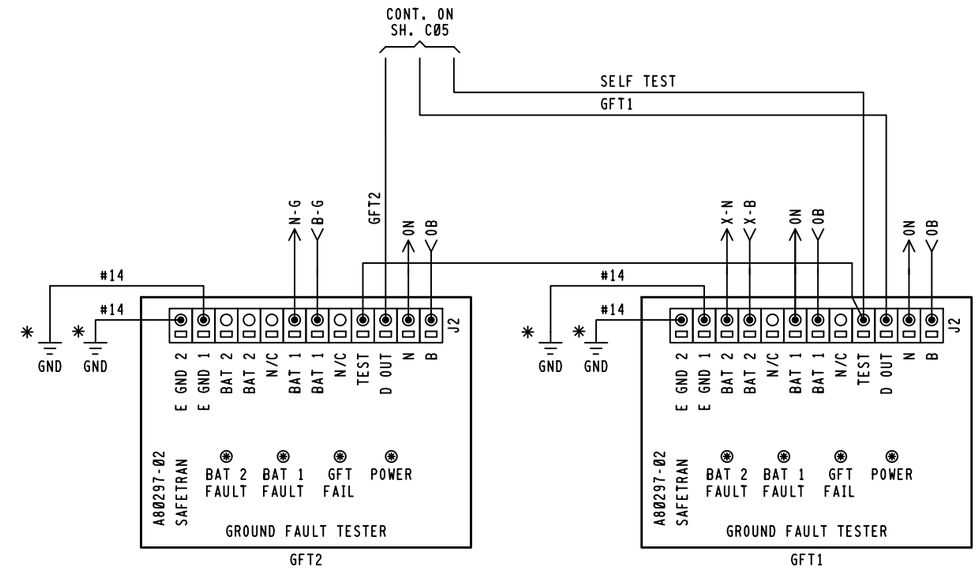

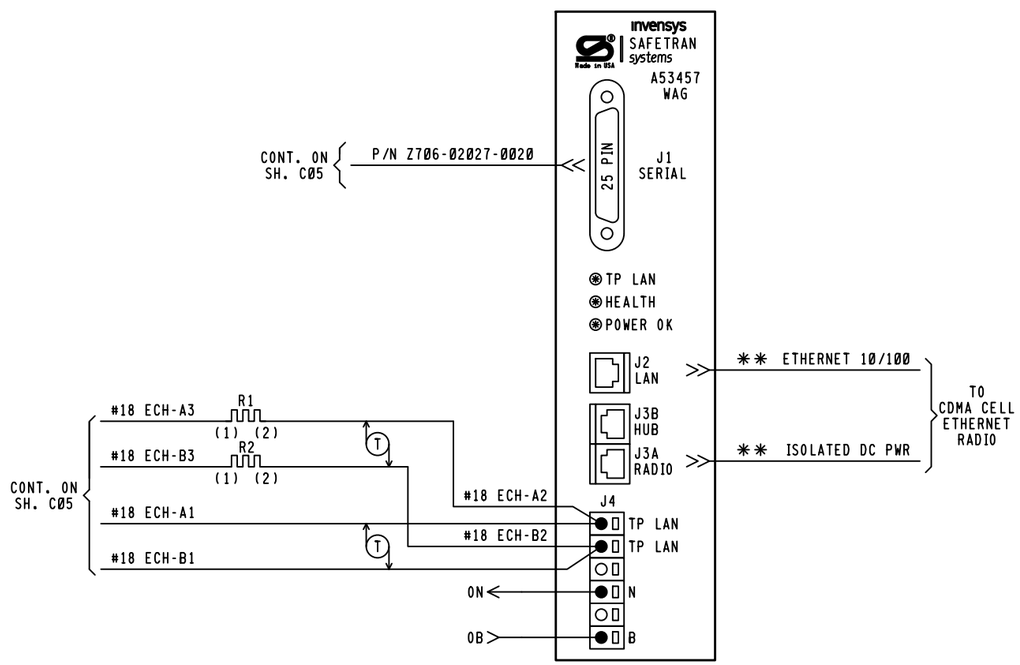

COMM NOTES,

1. WAG J3A PINOUTS,
   4 & 5 = +12VDC RADIO OUT
   7 & 8 = GND RADIO RETURN
2. WAG AND SEARII ECHELON COMM
   THROUGH GCP3000 LONTALK
   PROTOCOL CONNECTION

NOTE,

1. ALL WIRING #16 UNLESS NOTED OTHERWISE.
2. * = EARTH GROUND REF. TERMINALS REQUIRED FOR DETECTION. DO NOT JUMPER TERMINALS. MUST BE CONNECTED TO DIFFERENT POINTS OF BUNGALOW.
3. ** = TO BE PROVIDED BY COMMUNICATIONS
4. R1 & R2 -0.5 WATT, 20 OHM RESISTOR

NEW WORK

invensys Rail

PROJ #, IL2013016
DES BY, J. BRADY
CHK BY, D. ALBRIGHT
DATE, 05-25-13

= NOTE

3000ND2WSR.C08
REV. 03-29-13

CSX TRANSPORTATION
RAIL TRANSPORT GROUP ENGINEERING
COMMUNICATIONS AND SIGNALS

TR-138 (1050E RD.) 154492J

WAYSIDE ACCESS GATEWAY
METCALF, IL M.P. BD-214.19

DESIGNED	DIGITIZED	CHECKED	DATE
IRC/JWB	IRC/JWB	IRC/DBA	05-25-13

DESIGN DATE	REV. NO.	DRAWING	SHEET NO	FILE	SHEET
05-25-13	1	-----	-----	BD21419	C08