PRIME WARNING TIME = 27 SECONDS

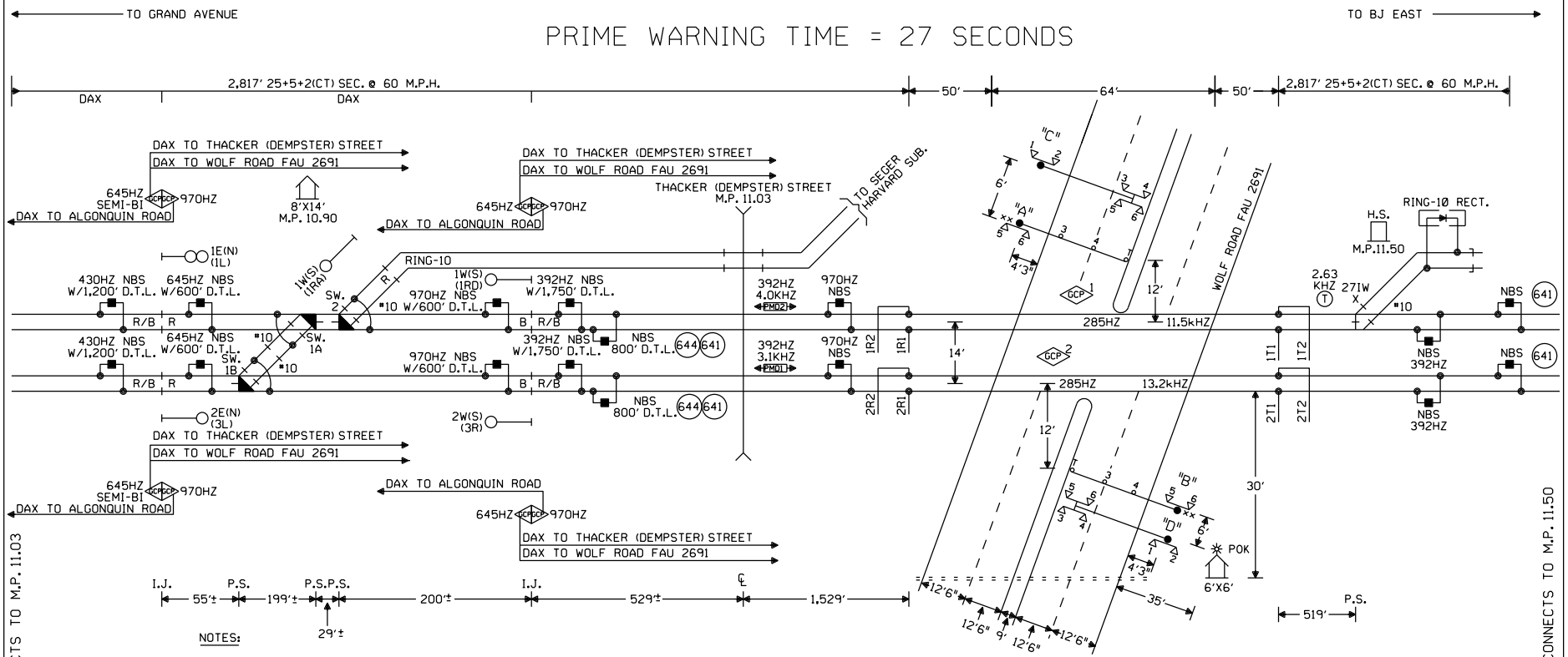

NOTES:

⊗ = TWISTED WIRES
INSULATED 1 TWIST PER FT.
ALL TRACK WIRES 2C. #6

TRANSMITTER AND RECEIVER LEADS TO BE SEPARATED BY AT LEAST 12" IN TRENCH, LENGTHS SHOULD NOT EXCEED MANUFACTURES RECOMMENDATION.

TOP OF FOUNDATION TO BE AT SAME ELEVATION AS THE SURFACE OF THE TRAVELED WAY & NO MORE THAN 4" ABOVE THE SURFACE OF THE GROUND.

ALL BUNGALOW WIRING TO BE #16 AWG FLEX UNLESS OTHERWISE SPECIFIED EXCEPT ALL GROUND WIRE TO BE #6 AWG FLEX OR LARGER.

ALL WIRING IN GATE MECHANISM TO BE #10 "AWG FLEX".

REFER TO UP STANDARD DWG FOR BUNGALOW GROUNDING.

PORTABLE GENERATOR EXTENSION CORD FOR 240V TO 240V IS PROVIDED AS WELL AS A 120V TO 240V ADAPTER.

ALL LIGHTS TO BE 12" ROUNDELS.

= = = = = = 4" X 80' CONDUIT

LIGHTS: LED LIGHTS

GATE "A": 29'
GATE "B": 29'
CANT "C": 23'
CANT "D": 23'
xx = BELL

CONSTRUCTION NOTES:

1. FINAL CABIN PLACEMENT TO BE VERIFIED BY ICC.
2. ORDER AND INSTALL THE FOLLOWING EQUIPMENT AT M.P. 10.90 AS PART OF THIS PROJECT:
   (4) TAB 380 ARRESTORS
   (2) TAB 583 EQUALIZERS

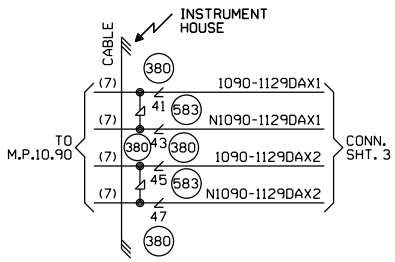

W(S) ←—○—→ E(N)

CABLE TABULATION

CABLE NO. 7 7C.NO.14 U.G.B.T. HOUSE TO M.P. 10.90

NEW SHEET

Designed: 06/17/13
INSTALL GATES, FLASHERS, CANTILEVERS, AND CWT AT WOLF ROAD FAU 2691, M.P.11.29
Rec#: WO#: 20550
IS: /JPW
/NST/JTB

MODIFICATION LEVEL	
Q. A. LAST LEVEL CHECKED	DU
LAST LEVEL MOD THIS TYPICAL	DU
LAST LEVEL BY DESIGNER	DU
CHANGED FROM TYPICAL?	Y

REV 01.24.11 4K 2TUCGTYP.1

CIRCUIT MODIFICATIONS ARE NOT TO BE MADE WITHOUT AUTHORITY FROM THE OFFICE OF SIGNAL DESIGN

Date: 06/17/13
Des: NST
Chk: AJA
AFE: 20550

UNION PACIFIC RAILROAD
DES PLAINES, ILLINOIS
WOLF ROAD FAU 2691
MILWAUKEE SUBDIVISION
Office of Sr AVP Engineering - Signal/TCO Omaha, Nebraska

Sh.: 1
DOT 174103F
MP: 11.29
ID: NEW1129.1X

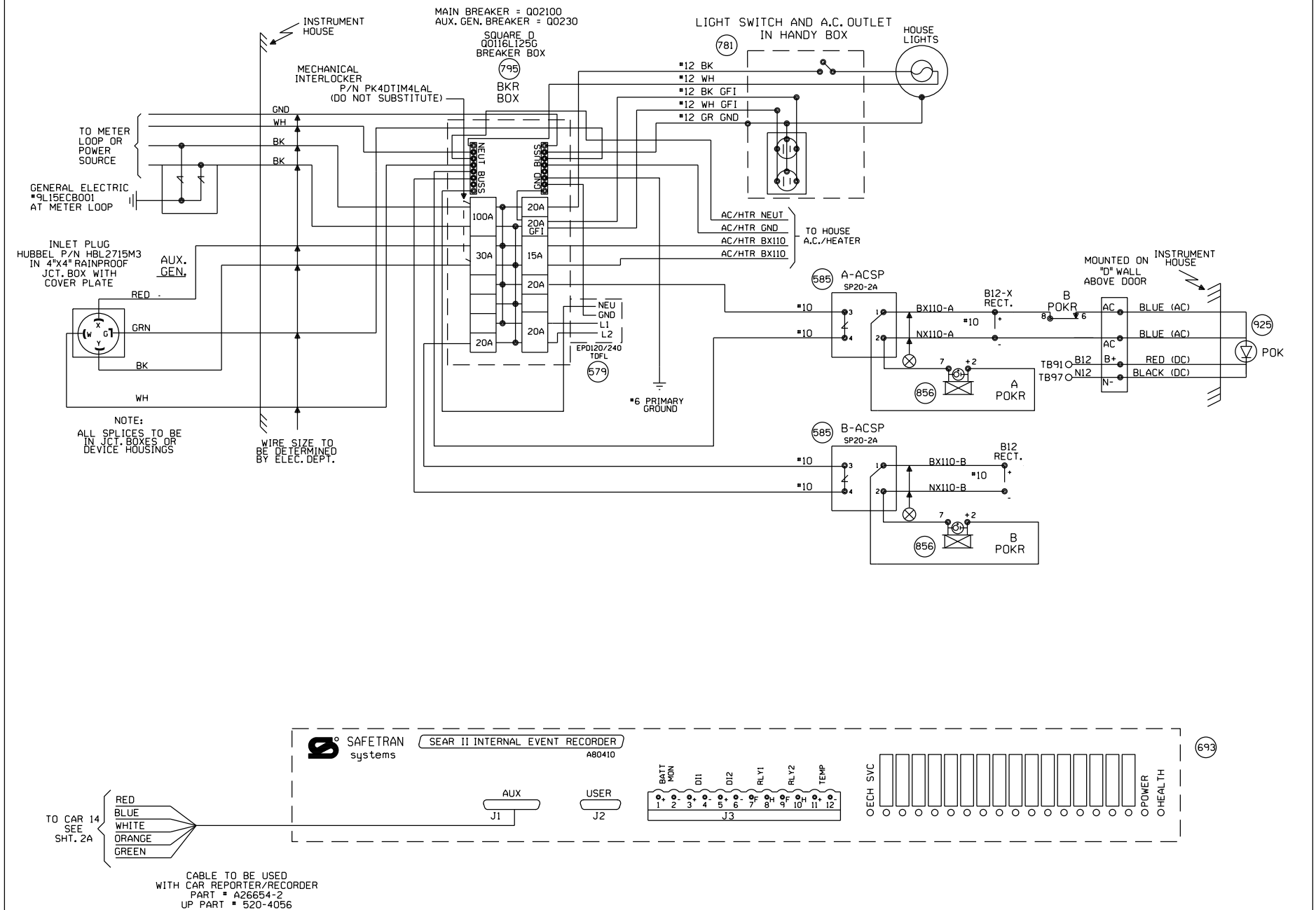

NEW SHEET

					Designed: 06/17/13 INSTALL GATES, FLASHERS, CANTILEVERS, AND CWT AT WOLF ROAD FAU 2691, M.P.11.29 Rec#: WO#: 20550 IS: /JPW / /NST/JTB	MODIFICATION LEVEL		CIRCUIT MODIFICATIONS ARE NOT TO BE MADE WITHOUT AUTHORITY FROM THE OFFICE OF SIGNAL DESIGN	Date: 06/17/13	UNION PACIFIC RAILROAD	Sh.: 2
						Q.A. LAST LEVEL CHECKED	DU		Des: NST	DES PLAINES, ILLINOIS	DOT 174103F
						LAST LEVEL MOD THIS TYPICAL	DU		Chk: JPW	WOLF ROAD FAU 2691	MP: 11.29
						LAST LEVEL BY DESIGNER	DU		AFE: 20550	MILWAUKEE SUBDIVISION	ID: NEW1129.2X
						CHANGED FROM TYPICAL?	Y			Office of AVP Engineering - Signal Omaha, Nebraska	
						REV 01.24.11 4K SEARAC.2					

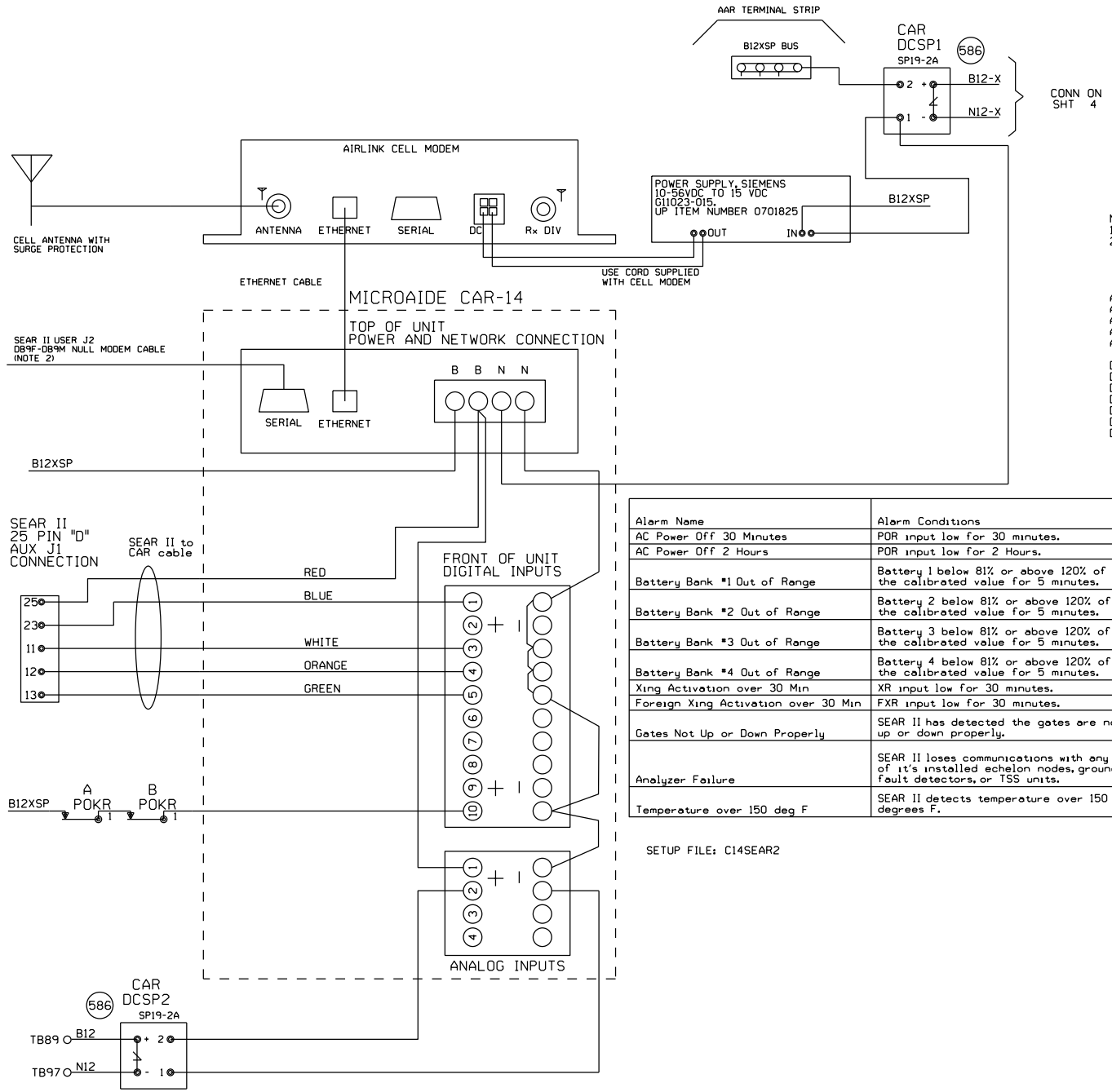

NOTE:
1) DO NOT JUMPER UNUSED INPUTS
2) THE CAR14 SERIAL PORT IS AVAILABLE TO ADD REMOTE CONNECTIVITY TO EXISTING LOGGING EQUIPMENT. USE NULL MODEM CABLE WITH SHIELDING DISCONNECTED AT ONE OR BOTH SIDES.

ANALOG INPUTS:
A1) B12X BATTERY BANK
A2) B12 BATTERY BANK
A3) BATTERY BANK 3
A4) BATTERY BANK 4

DIGITAL INPUTS
D1) XR (BLUE WIRE)
D2) FOREIGN XR
D3) ANALYZER FAILURE (WHITE WIRE)
D4) HIGH TEMPERATURE (ORANGE WIRE)
D5) GATES NOT UP OR DOWN PROPERLY (GREEN WIRE)
D10) POWER OFF INDICATION

Alarm Name	Alarm Conditions	Alarm Clearing Conditions	Cleared by Maintainer Mode?
AC Power Off 30 Minutes	POR input low for 30 minutes.	POR input high for 5 minutes.	No
AC Power Off 2 Hours	POR input low for 2 Hours.	POR input high for 5 minutes.	No
Battery Bank #1 Out of Range	Battery 1 below 81% or above 120% of the calibrated value for 5 minutes.	Battery 1 within acceptable range for 5 minutes.	No
Battery Bank #2 Out of Range	Battery 2 below 81% or above 120% of the calibrated value for 5 minutes.	Battery 2 within acceptable range for 5 minutes.	No
Battery Bank #3 Out of Range	Battery 3 below 81% or above 120% of the calibrated value for 5 minutes.	Battery 3 within acceptable range for 5 minutes.	No
Battery Bank #4 Out of Range	Battery 4 below 81% or above 120% of the calibrated value for 5 minutes.	Battery 4 within acceptable range for 5 minutes.	No
Xing Activation over 30 Min	XR input low for 30 minutes.	XR input high for 10 seconds.	Yes
Foreign Xing Activation over 30 Min	FXR input low for 30 minutes.	FXR input high for 10 seconds.	Yes
Gates Not Up or Down Properly	SEAR II has detected the gates are not up or down properly.	SEAR II has detected the gates are up or down properly.	No
Analyzer Failure	SEAR II loses communications with any of it's installed echelon nodes, ground fault detectors, or TSS units.	SEAR II has recovered after an analyzer failure alarm.	No
Temperature over 150 deg F	SEAR II detects temperature over 150 degrees F.	SEAR II sensor detects temperature is OK after a High-Temp alarm.	No

SETUP FILE: C14SEAR2

NEW SHEET

Designed: 06/17/13
INSTALL GATES, FLASHERS, CANTILEVERS, AND CWT AT WOLF ROAD FAU 2691, M.P.11.29
Rec#: WO#: 20550
IS: /JPW
/ /NST/JTB

MODIFICATION LEVEL	
Q.A. LAST LEVEL CHECKED	DU
LAST LEVEL MOD THIS TYPICAL	DU
LAST LEVEL BY DESIGNER	DU
CHANGED FROM TYPICAL?	Y

REV 01.24.11 4K ACDCCAR14SII.3

CIRCUIT MODIFICATIONS ARE NOT TO BE MADE WITHOUT AUTHORITY FROM THE OFFICE OF SIGNAL DESIGN

Date: 06/17/13
Des: NST
Chk: JPW
AFE: 20550

UNION PACIFIC RAILROAD
DES PLAINES, ILLINOIS
WOLF ROAD FAU 2691
MILWAUKEE SUBDIVISION
Office of AVP Engineering - Signal Omaha, Nebraska

Sh.: 2A
DOT 174103F
MP: 11.29
ID: NEW1129.2AX

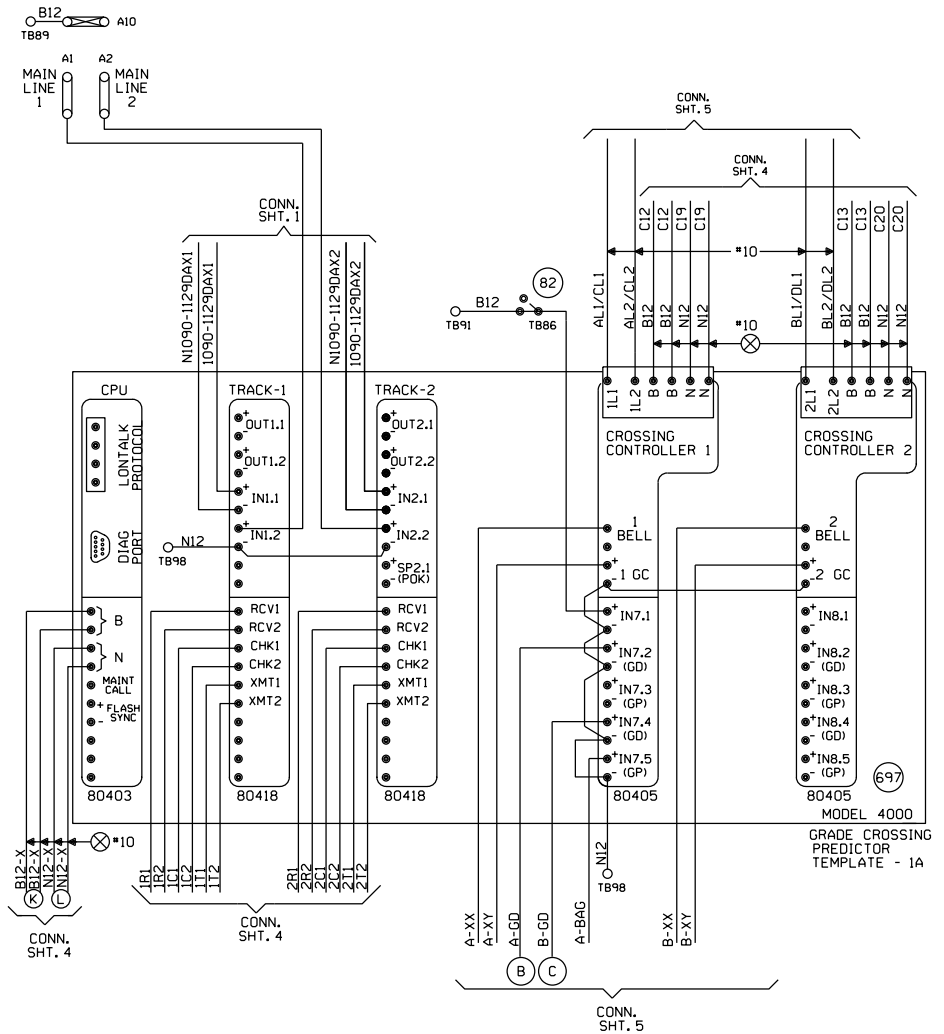

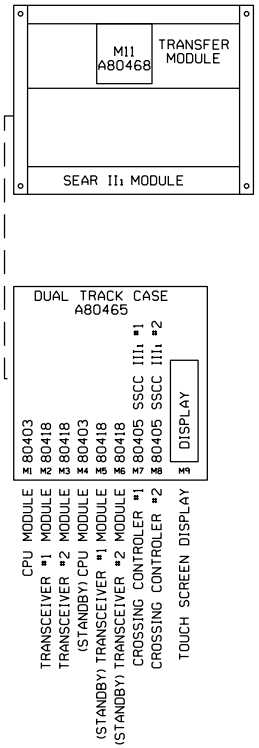

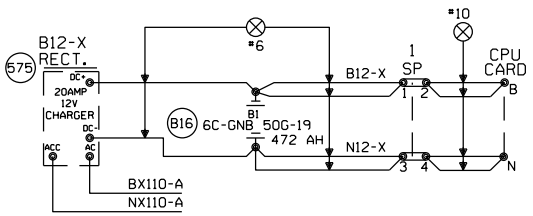

"Mf" FREQUENCY (HZ)	MAXIMUM TRANSMIT WIRE LENGTH (FEET)
86	100
114	125
156	150
211	200
285-970	250

NOTE:
EACH TRANSMITTER TO RAIL WIRE FROM XMT1 AND XMT2 MUST NOT EXCEED THE MAXIMUM LENGTH SPECIFIED IN THE TABLE SHOWN. THE RECEIVER WIRE LENGTH IS NOT CRITICAL. DOES NOT APPLY TO 6 TRACK WIRE APPLICATION.

NEW SHEET

Designed: 06/17/13
INSTALL GATES, FLASHERS, CANTILEVERS, AND CWT AT WOLF ROAD FAU 2691, M.P.11.29
Rec#: WO#: 20550
IS: /JPW
/ /NST/JTB

MODIFICATION LEVEL	
Q.A. LAST LEVEL CHECKED	DU
LAST LEVEL MOD THIS TYPICAL	DU
LAST LEVEL BY DESIGNER	DU
CHANGED FROM TYPICAL?	Y

REV 01.24.11 4K 2TKGF.3

CIRCUIT MODIFICATIONS ARE NOT TO BE MADE WITHOUT AUTHORITY FROM THE OFFICE OF SIGNAL DESIGN

Date: 06/17/13
Des: NST
Chk: JPW
AFE: 20550

UNION PACIFIC RAILROAD
DES PLAINES, ILLINOIS
WOLF ROAD FAU 2691
MILWAUKEE SUBDIVISION
Office of AVP Engineering - Signal Omaha, Nebraska

Sh.: 3
DOT 174103F
MP: 11.29
ID: NEW1129.3X

Minimum Program Steps Report

Location and SIN

DOT Number: 174103F
Milepost Number: 11.29
Site Name: DES PLAINES, IL

SIN: 762010010016 *

* Parameter is part of office check number calculation.

MCF and Template Selection

MCF Name: GCP-T6X-02-4.mcf
MCF Revision: 24
MCFCRC: 09FC363B

Template = 1A:6 Trk Bi (OCCN) *

* Parameter is part of office check number calculation.

Minimum Program Steps

TEMPLATE: module configuration
Track 2/RIO 1 Slot = Track (OCCN) *

TEMPLATE: track 1-Bi, Island
Track 1 : GCP Frequency = 285 Hz (Field,TCN)
Track 1 : Approach Distance = 2817 ft (Set in Field,TCN)
Track 1 : Prime Warning Time = 27 sec (OCCN) *
Track 1 : Prime UAX = IP (OCCN) *
Track 1 : Prime UAX Pickup = 15 sec (OCCN) *
Track 1 : GCP Transmit Level = Medium (Set in Field,TCN)
Track 1 : Isl Frequency = 11.5 kHz (Set in Field)

TEMPLATE: track 2-Bi, Island
Track 2 : GCP Frequency = 285 Hz (Field,TCN)
Track 2 : Approach Distance = 2817 ft (Set in Field,TCN)
Track 2 : Prime Warning Time = 27 sec (OCCN) *
Track 2 : Prime UAX = IP (OCCN) *
Track 2 : Prime UAX Pickup = 15 sec (OCCN) *
Track 2 : GCP Transmit Level = Medium (Set in Field,TCN)
Track 2 : Isl Frequency = 13.2 kHz (Set in Field)

TEMPLATE: AND 1 XR
AND 1 Enable Used = Yes (OCCN) *

TEMPLATE: SSCC
SSCC 1 : Lamp Neutral Test = Off (Set in Field)
SSCC 2 : Lamp Neutral Test = Off (Set in Field)

TEMPLATE: OOS
OOS Control = OOS IPs (OCCN) *

TEMPLATE: IP assignment 1
IN 1.1 = T1 Prime UAX (OCCN) *
IN 1.2 = Out Of Service IP 1 (OCCN) *
IN 2.1 = T2 Prime UAX (OCCN) *
IN 2.2 = Out Of Service IP 2 (OCCN) *

TEMPLATE: IP assignment SSCC

IN 7.1 = AND 1 XR Enable (OCCN) *

GCP: track 1
Track 1 : Island Distance = 164 ft (Set in Field,TCN)

GCP: track 2
Track 2 : Island Distance = 164 ft (Set in Field,TCN)

ISLAND: track 1
Track 1 : Pickup Delay (2s +) = 2 sec (OCCN) *

ISLAND: track 2
Track 2 : Pickup Delay (2s +) = 2 sec (OCCN) *

ADVANCED: site options
Daylight Savings = Off (Set in Field)

* Parameter is part of office check number calculation.

Check Numbers

Office Check Number: 040D54A1
Config. Check Number: 418130E1
(Based on MCF Revision 24)

Parameters not part of office check number calculation:

Track 1 : GCP Frequency = 285 Hz
Track 1 : Approach Distance = 2817 ft (Set in Field)
Track 1 : GCP Transmit Level = Medium (Set in Field)
Track 1 : Isl Frequency = 11.5 kHz
Track 2 : GCP Frequency = 285 Hz
Track 2 : Approach Distance = 2817 ft (Set in Field)
Track 2 : GCP Transmit Level = Medium (Set in Field)
Track 2 : Isl Frequency = 13.2 kHz
SSCC 1 : Lamp Neutral Test = Off (Set in Field)
SSCC 2 : Lamp Neutral Test = Off (Set in Field)
Track 1 : Island Distance = 164 ft (Set in Field)
Track 2 : Island Distance = 164 ft (Set in Field)
Daylight Savings = Off (Set in Field)

Comments

<none>

Configuration Package File

Filename: NEW1129_174103F.pac
Path: H:\UP\Xings\Projects\21-359-0 (Wolf Road FAU 2691)\PAC Files\MP 11.29\
Date/Time: 8/14/2013 8:01:15
DT Version: 5.3.3

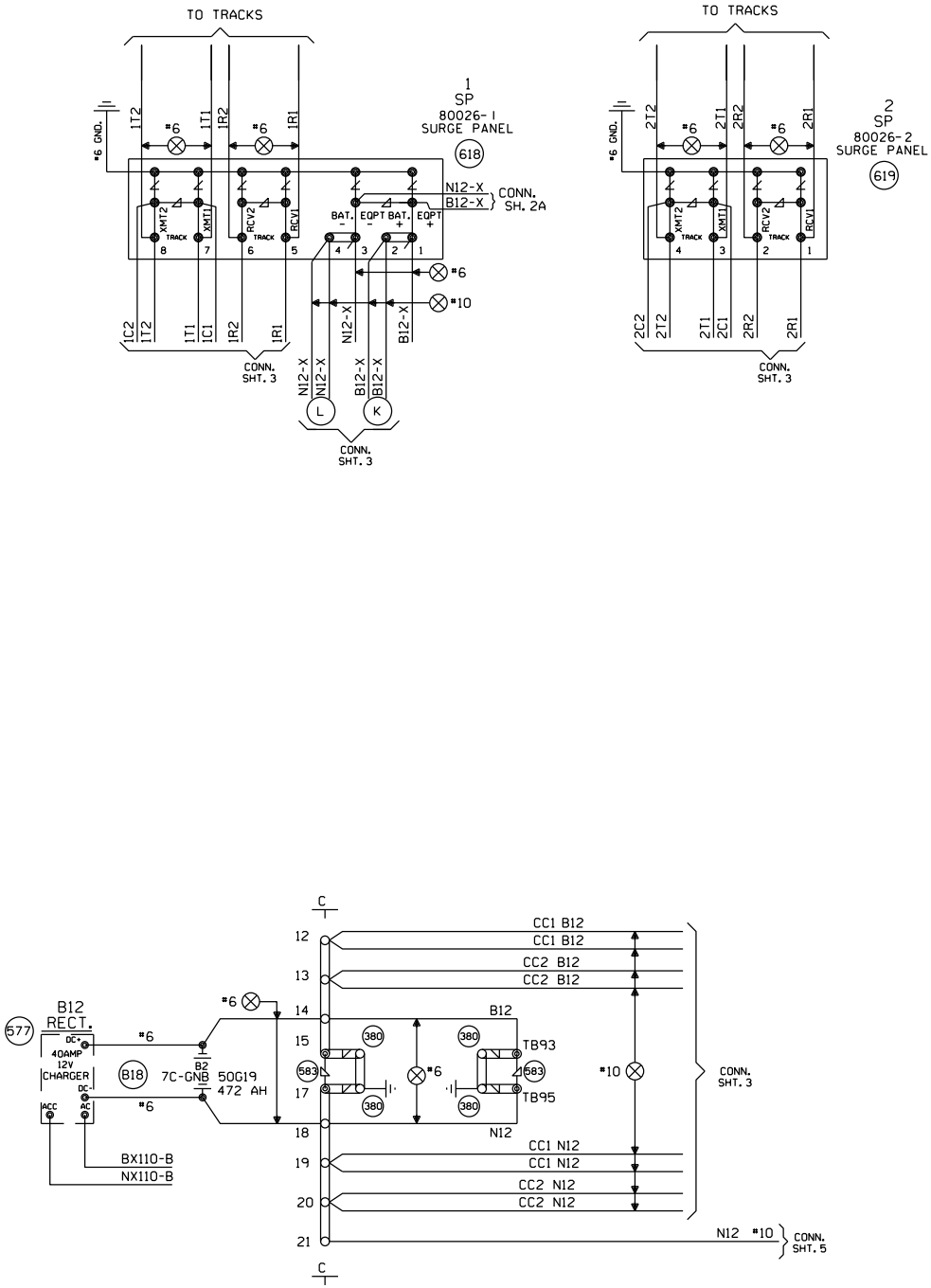

NEW SHEET

					Designed: 06/17/13 INSTALL GATES, FLASHERS, CANTILEVERS, AND CWT AT WOLF ROAD FAU 2691, M.P.11.29 Rec#: WO#: 20550 IS: /JPW / /NST/JTB	MODIFICATION LEVEL		CIRCUIT MODIFICATIONS ARE NOT TO BE MADE WITHOUT AUTHORITY FROM THE OFFICE OF SIGNAL DESIGN	Date: 06/17/13 Des: NST Chk: JPW AFE: 20550	UNION PACIFIC RAILROAD DES PLAINES, ILLINOIS WOLF ROAD FAU 2691 MILWAUKEE SUBDIVISION Office of AVP Engineering - Signal Omaha, Nebraska	Sh.: 4 DOT 174103F MP: 11.29 ID: NEW1129.4X
						Q.A. LAST LEVEL CHECKED	DU				
						LAST LEVEL MOD THIS TYPICAL	DU				
						LAST LEVEL BY DESIGNER	DU				
						CHANGED FROM TYPICAL?	Y				
						REV 01.24.11 4K 4TKSPGFC.4					

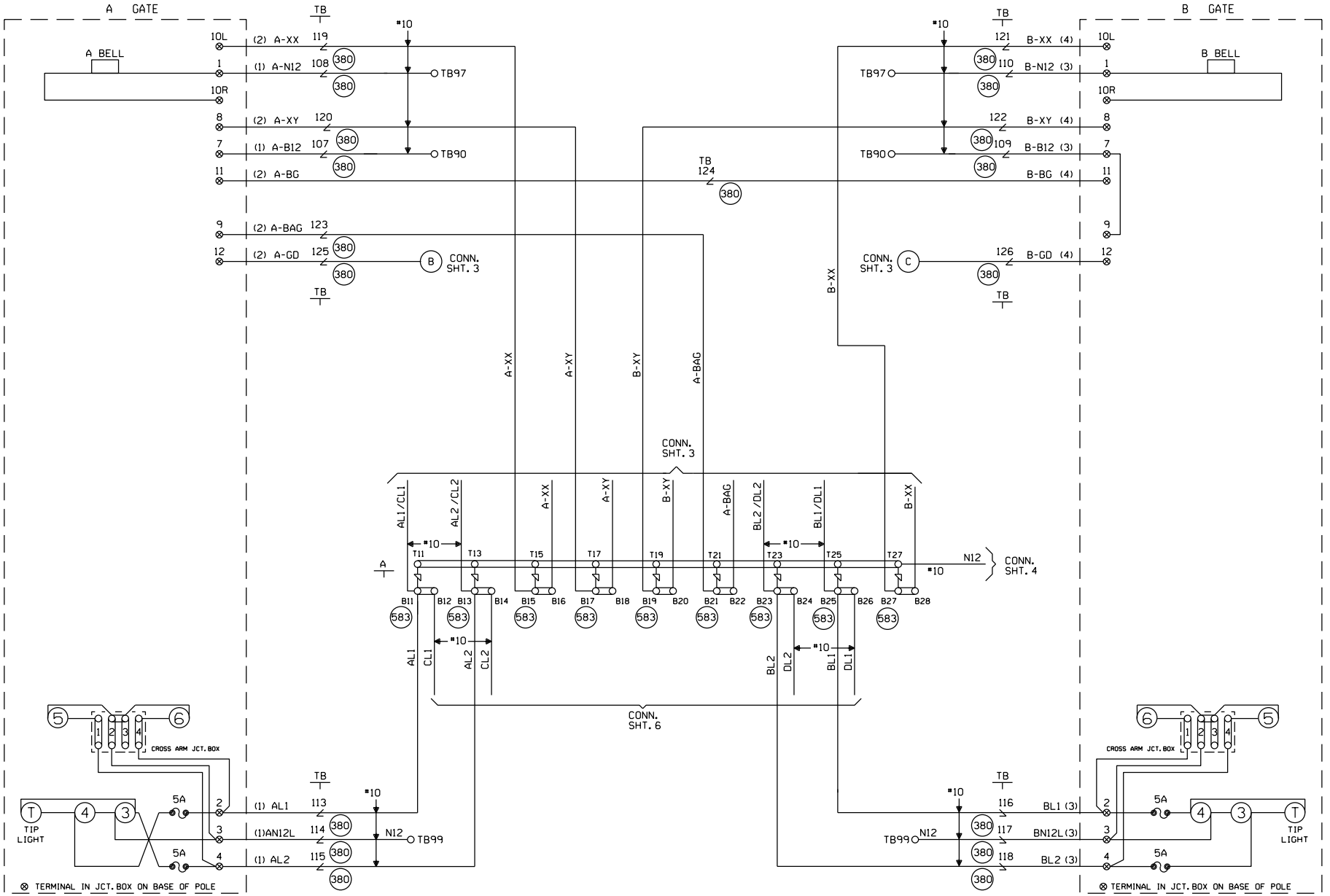

CABLE TABULATION

CABLE NO. 1 5C. NO.6 U.G.B.T. TO GATE A
CABLE NO. 2 7C. NO.14 U.G.B.T. TO GATE A
CABLE NO. 3 5C. NO.6 U.G.B.T. TO GATE B
CABLE NO. 4 7C. NO.14 U.G.B.T. TO GATE B

NEW SHEET

Designed: 06/17/13
INSTALL GATES, FLASHERS, CANTILEVERS, AND CWT AT WOLF ROAD FAU 2691, M.P.11.29
Rec#: WO#: 20550
IS: /JPW
/ /NST/JTB

MODIFICATION LEVEL	
Q. A. LAST LEVEL CHECKED	DU
LAST LEVEL MOD THIS TYPICAL	DU
LAST LEVEL BY DESIGNER	DU
CHANGED FROM TYPICAL?	Y

REV 01.24.11 4K GFCTYP.5

CIRCUIT MODIFICATIONS ARE NOT TO BE MADE WITHOUT AUTHORITY FROM THE OFFICE OF SIGNAL DESIGN

Date: 06/17/13
Des: NST
Chk: JPW
AFE: 20550

UNION PACIFIC RAILROAD
DES PLAINES, ILLINOIS
WOLF ROAD FAU 2691
MILWAUKEE SUBDIVISION
Office of AVP Engineering - Signal Omaha, Nebraska

Sh.: 5
DOT 174103F
MP: 11.29
ID: NEW1129.5X

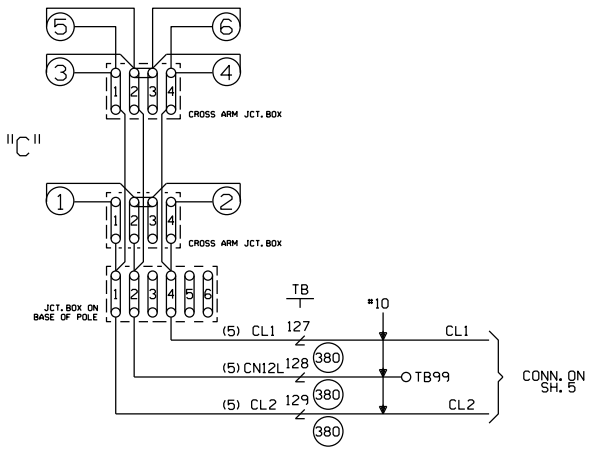

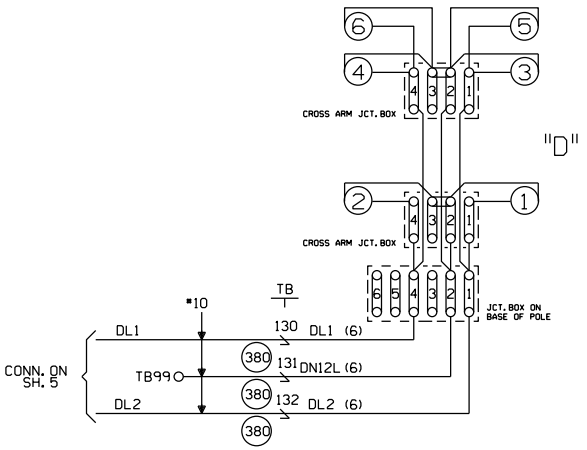

CABLE TABULATION

CABLE NO. 5 5C. NO. 6 U.G.B.T. TO CANT C
CABLE NO. 6 5C. NO. 6 U.G.B.T. TO CANT D

NEW SHEET

Designed: 06/17/13
INSTALL GATES, FLASHERS, CANTILEVERS, AND CWT AT WOLF ROAD FAU 2691, M.P.11.29
Rec#: WO#: 20550
IS: /JPW
/ /NST/JTB

MODIFICATION LEVEL	
Q. A. LAST LEVEL CHECKED	DU
LAST LEVEL MOD THIS TYPICAL	DU
LAST LEVEL BY DESIGNER	DU
CHANGED FROM TYPICAL?	Y

REV 01.24.11 4K CGTYP.6

CIRCUIT MODIFICATIONS ARE NOT TO BE MADE WITHOUT AUTHORITY FROM THE OFFICE OF SIGNAL DESIGN

Date: 06/17/13
Des: NST
Chk: JPW
AFE: 20550

UNION PACIFIC RAILROAD

DES PLAINES, ILLINOIS
WOLF ROAD FAU 2691
MILWAUKEE SUBDIVISION

Office of AVP Engineering - Signal Omaha, Nebraska

Sh.: 6
DOT 174103F
MP: 11.29
ID: NEW1129.6X

WCH 3593-E

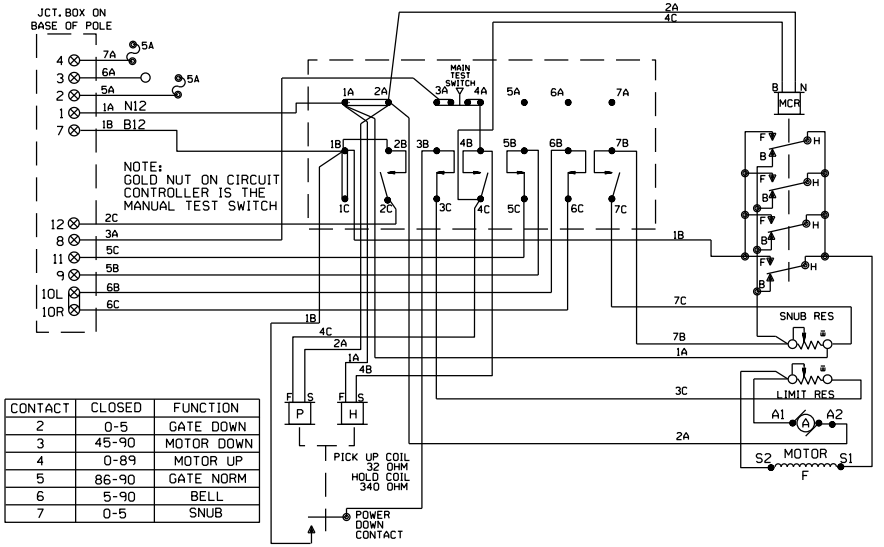

CONTACT	CLOSED	FUNCTION
2	0-5	GATE DOWN
3	45-90	MOTOR DOWN
4	0-89	MOTOR UP
5	86-90	GATE NORM
6	5-90	BELL
7	0-5	SNUB

WCH 3597-E

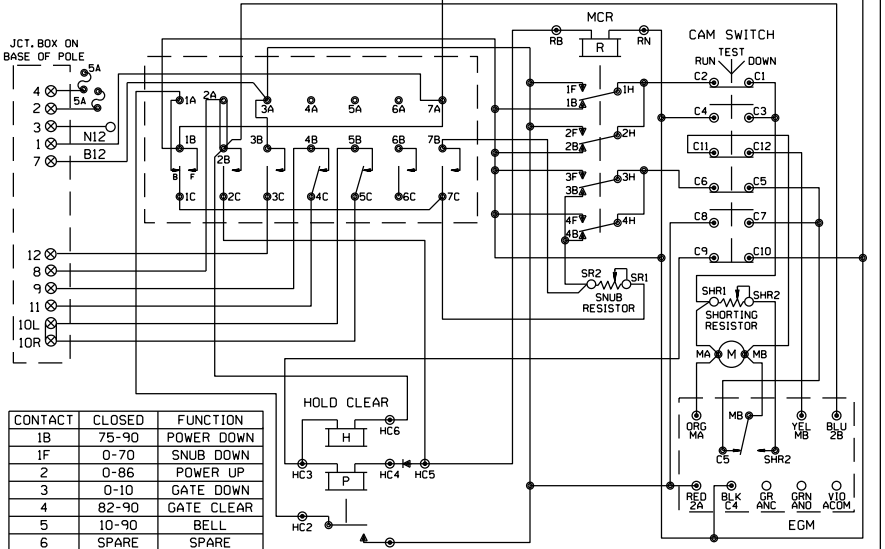

CONTACT	CLOSED	FUNCTION
1B	75-90	POWER DOWN
1F	0-70	SNUB DOWN
2	0-86	POWER UP
3	0-10	GATE DOWN
4	82-90	GATE CLEAR
5	10-90	BELL
6	SPARE	SPARE
7	0-10	SNUB

WCH 3597-RB

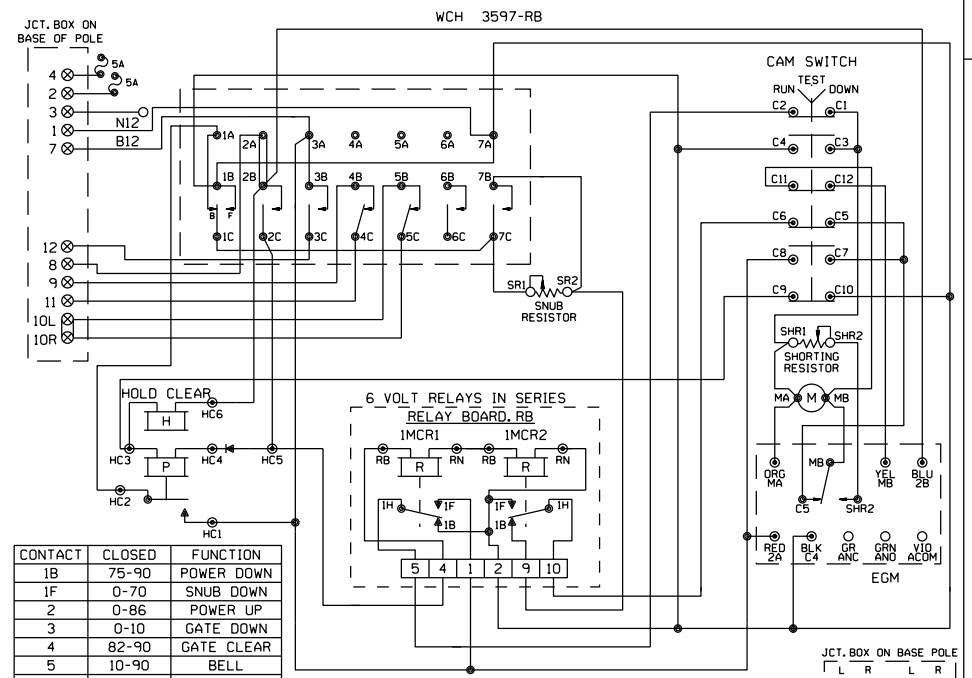

CONTACT	CLOSED	FUNCTION
1B	75-90	POWER DOWN
1F	0-70	SNUB DOWN
2	0-86	POWER UP
3	0-10	GATE DOWN
4	82-90	GATE CLEAR
5	10-90	BELL
6	SPARE	SPARE
7	0-10	SNUB

SHOW TYPE MECH. INSTALLED

ALL MECHANISMS SHOWN IN THE CLEAR POSITION

SAFETRAN S-60

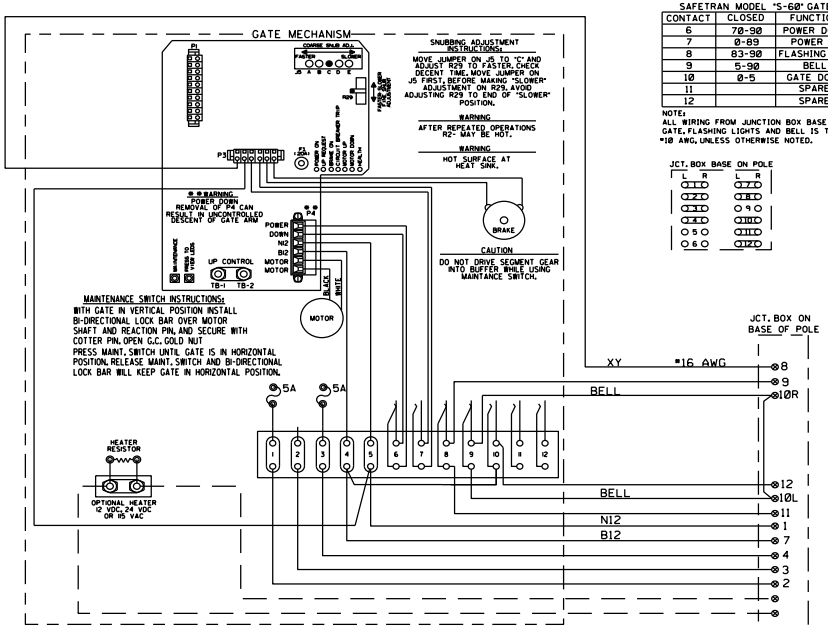

SAFETRAN MODEL "S-60" GATE

CONTACT	CLOSED	FUNCTION
6	70-90	POWER DOWN
7	0-89	POWER UP
8	83-90	FLASHING LGT.
9	5-90	BELL
10	0-5	GATE DOWN
11		SPARE
12		SPARE

NOTE:
ALL WIRING FROM JUNCTION BOX BASE TO GATE, FLASHING LIGHTS AND BELL IS TO BE #10 AWG, UNLESS OTHERWISE NOTED.

JCT. BOX BASE ON POLE

NEW SHEET

Designed: 06/17/13
INSTALL GATES, FLASHERS, CANTILEVERS, AND CWT AT WOLF ROAD FAU 2691, M.P.11.29
Rec#: WO#: 20550
IS: /JPW
/ /NST/JTB

MODIFICATION LEVEL	
Q.A. LAST LEVEL CHECKED	DU
LAST LEVEL MOD THIS TYPICAL	DU
LAST LEVEL BY DESIGNER	DU
CHANGED FROM TYPICAL?	N

REV 01.24.11 4K GWIRING.7

CIRCUIT MODIFICATIONS ARE NOT TO BE MADE WITHOUT AUTHORITY FROM THE OFFICE OF SIGNAL DESIGN

Date: 06/17/13
Des: NST
Chk: JPW
AFE: 20550

UNION PACIFIC RAILROAD
DES PLAINES, ILLINOIS
WOLF ROAD FAU 2691
MILWAUKEE SUBDIVISION
Office of AVP Engineering - Signal Omaha, Nebraska

Sh.: 7
DOT 174103F
MP: 11.29
ID: NEW1129.7X

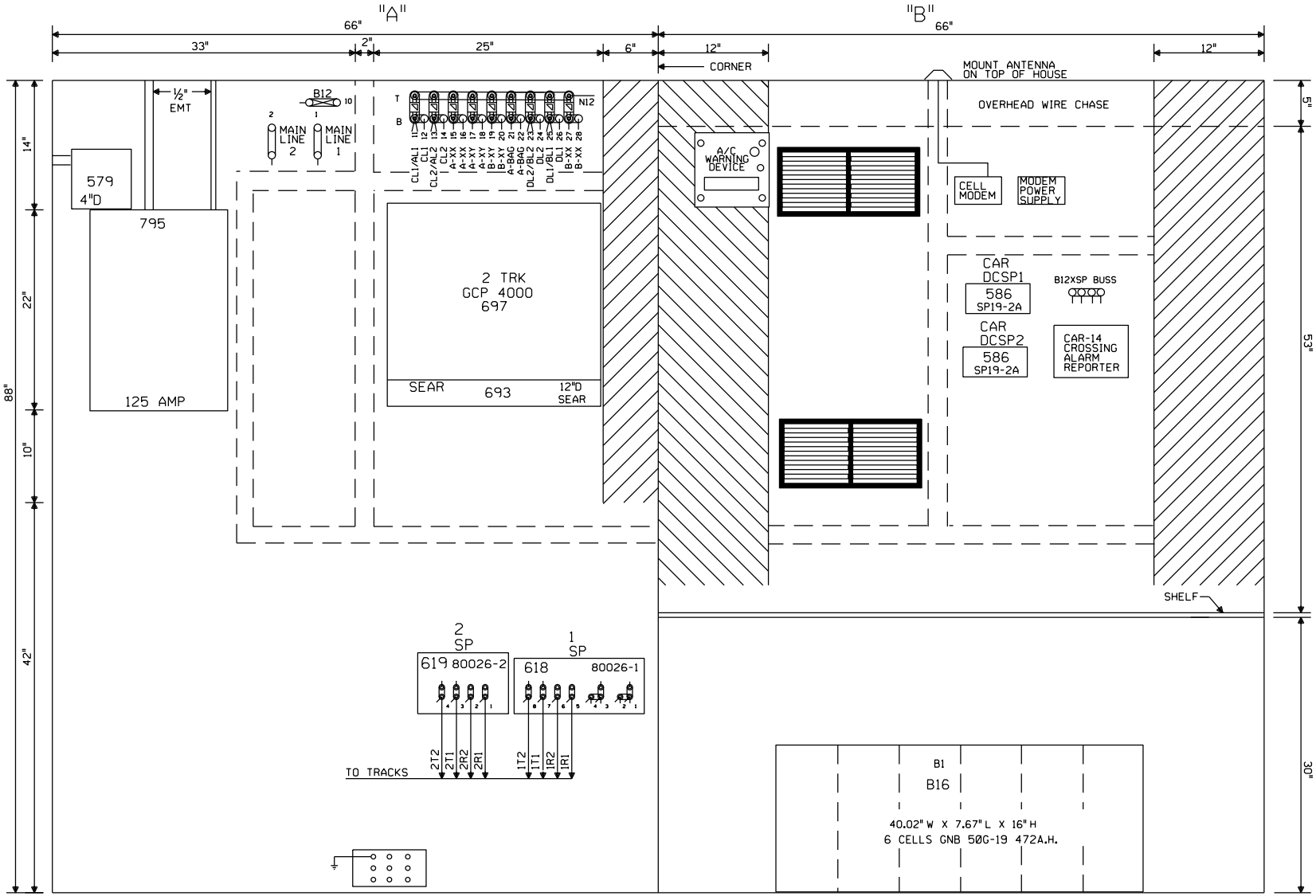

NOTE: ALL DIMENSIONS SHOWN ARE APPROXIMATE.

NEW SHEET

					Designed: 06/17/13 INSTALL GATES, FLASHERS, CANTILEVERS, AND CWT AT WOLF ROAD FAU 2691, M.P.11.29 Rec#: WO#: 20550 IS: /JPW / /NST/JTB	MODIFICATION LEVEL		CIRCUIT MODIFICATIONS ARE NOT TO BE MADE WITHOUT AUTHORITY FROM THE OFFICE OF SIGNAL DESIGN	Date: 06/17/13	UNION PACIFIC RAILROAD	Sh.: 8
						Q. A. LAST LEVEL CHECKED	DU		Des: NST	DES PLAINES, ILLINOIS	DOT 174103F
						LAST LEVEL MOD THIS TYPICAL	DU		Chk: JPW	WOLF ROAD FAU 2691	MP: 11.29
						LAST LEVEL BY DESIGNER	DU		AFE: 20550	MILWAUKEE SUBDIVISION	ID: NEW1129.8X
						CHANGED FROM TYPICAL?	Y			Office of AVP Engineering - Signal Omaha, Nebraska	
						REV 01.24.11 4K 4TKGFC.8					

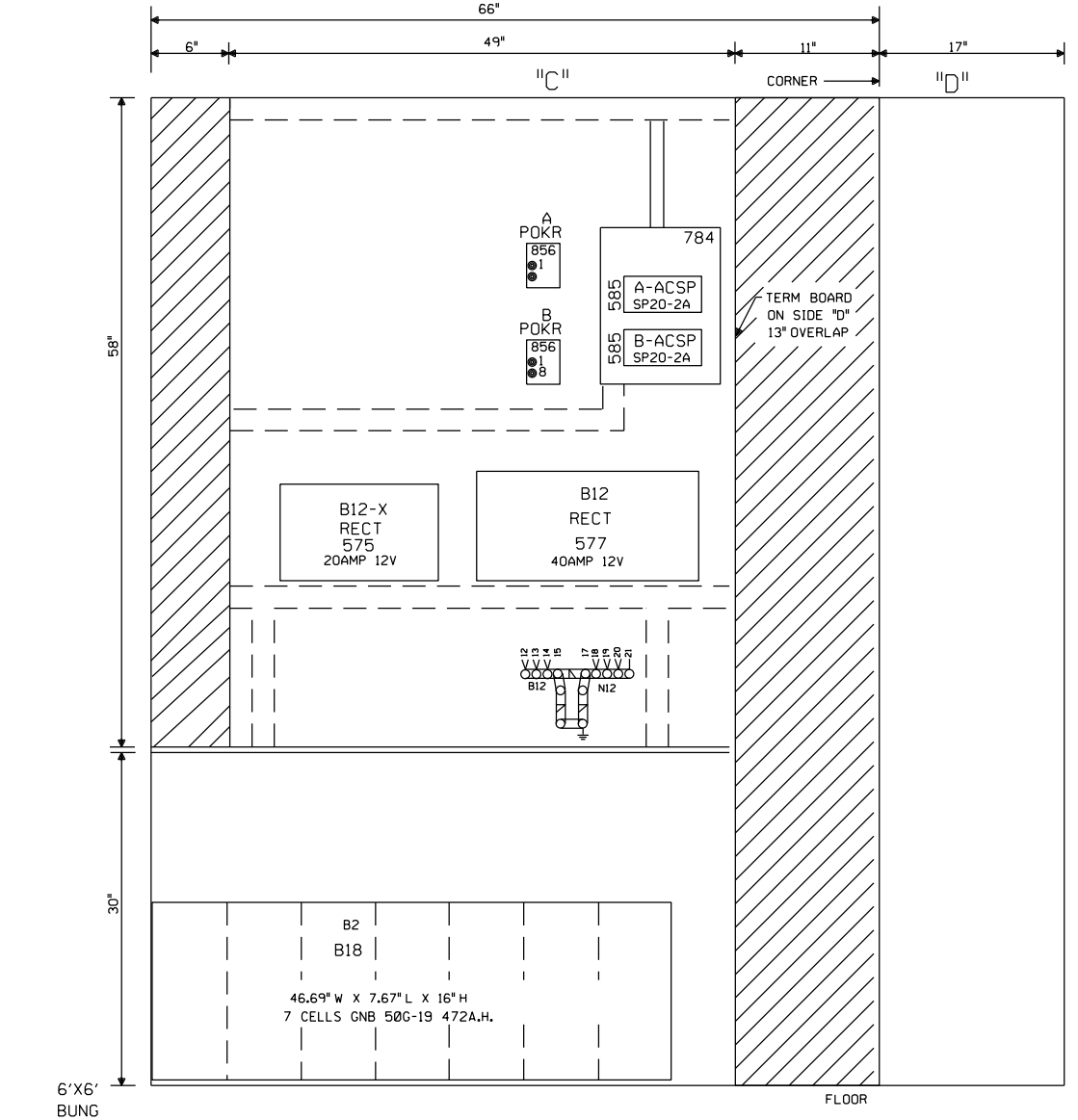

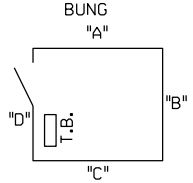

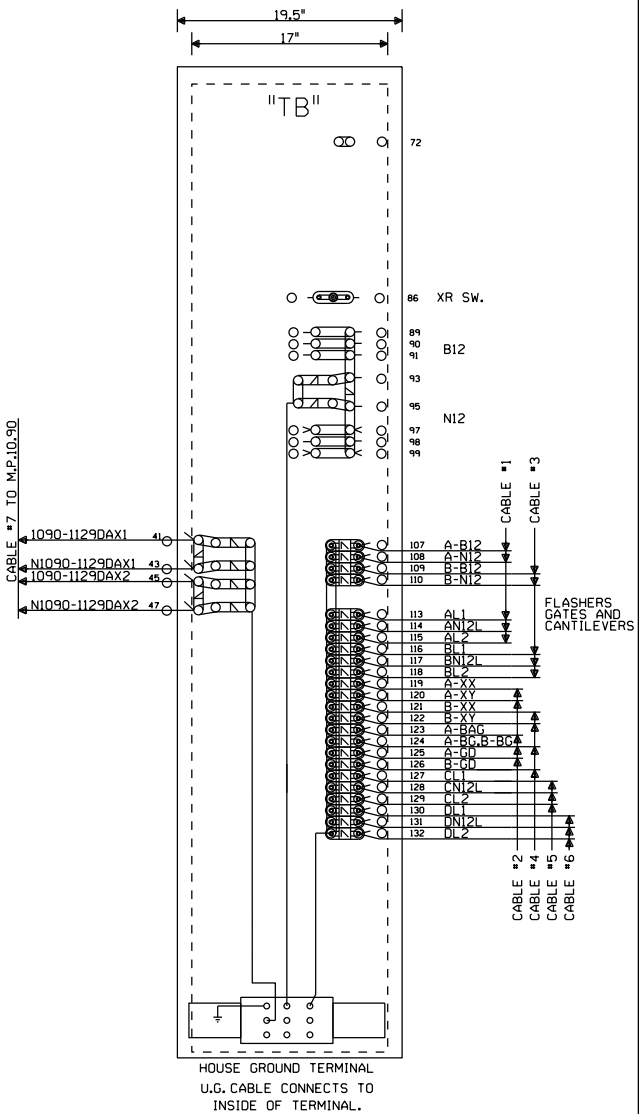

NOTE: NO TEST LINKS TO BE INSTALLED WITH CROSSING LIGHTING OR GATE MECH CIRCUITRY

NOTE: ALL DIMENSIONS SHOWN ARE APPROXIMATE.

NEW SHEET

Designed: 06/17/13 INSTALL GATES, FLASHERS, CANTILEVERS, AND CWT AT WOLF ROAD FAU 2691, M.P.11.29 Rec#: WO#: 20550 IS: /JPW / /NST/JTB	MODIFICATION LEVEL		CIRCUIT MODIFICATIONS ARE NOT TO BE MADE WITHOUT AUTHORITY FROM THE OFFICE OF SIGNAL DESIGN	Date: 06/17/13	UNION PACIFIC RAILROAD	Sh.: 9
	Q.A. LAST LEVEL CHECKED	DU		Des: NST	DES PLAINES, ILLINOIS	DOT 174103F
	LAST LEVEL MOD THIS TYPICAL	DU		Chk: JPW	WOLF ROAD FAU 2691	MP: 11.29
	LAST LEVEL BY DESIGNER	DU		AFE: 20550	MILWAUKEE SUBDIVISION	ID: NEW1129.9X
	CHANGED FROM TYPICAL?	Y			Office of AVP Engineering - Signal Omaha, Nebraska	
	REV 01.24.11 4K GFC.9					