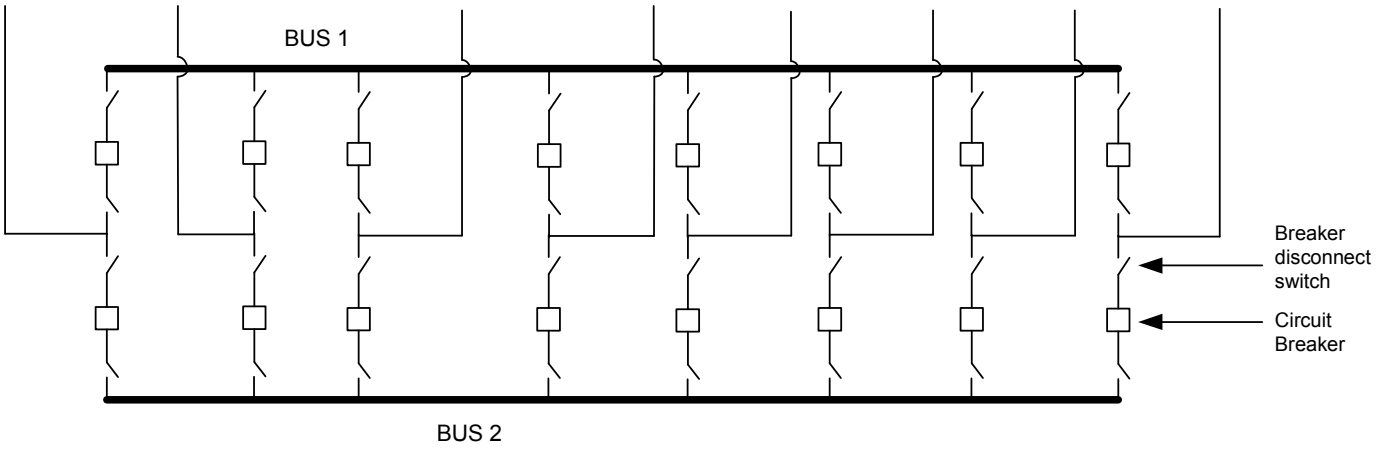8 Position Double Bus, Double Breaker Bus Configuration