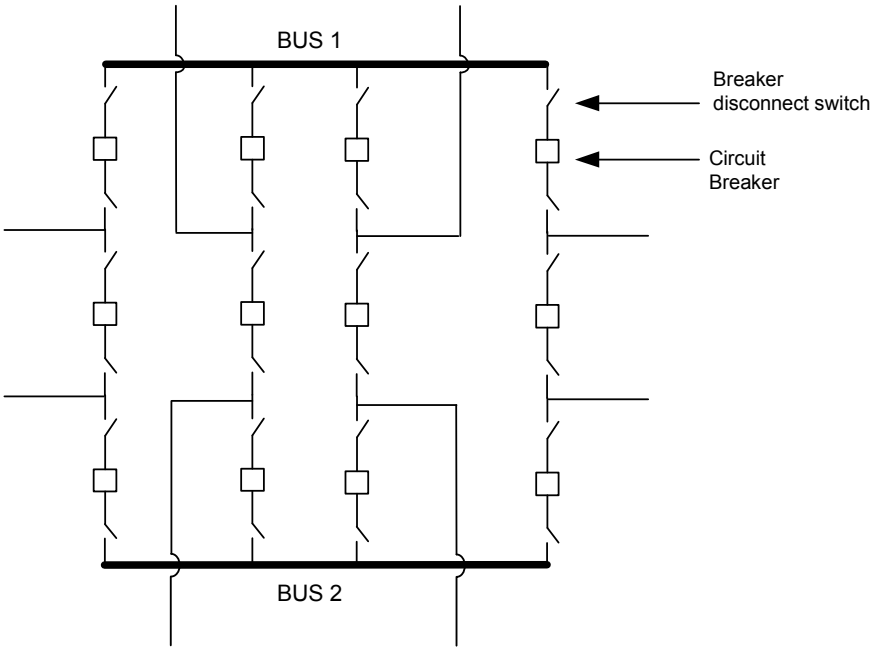8 Position Breaker-And-A-Half (BAAH) Bus Configuration