REVISIONS				
NO.	DATE	BY	DESCRIPTION	APP. BY
1				
2				
3				
4				
5				

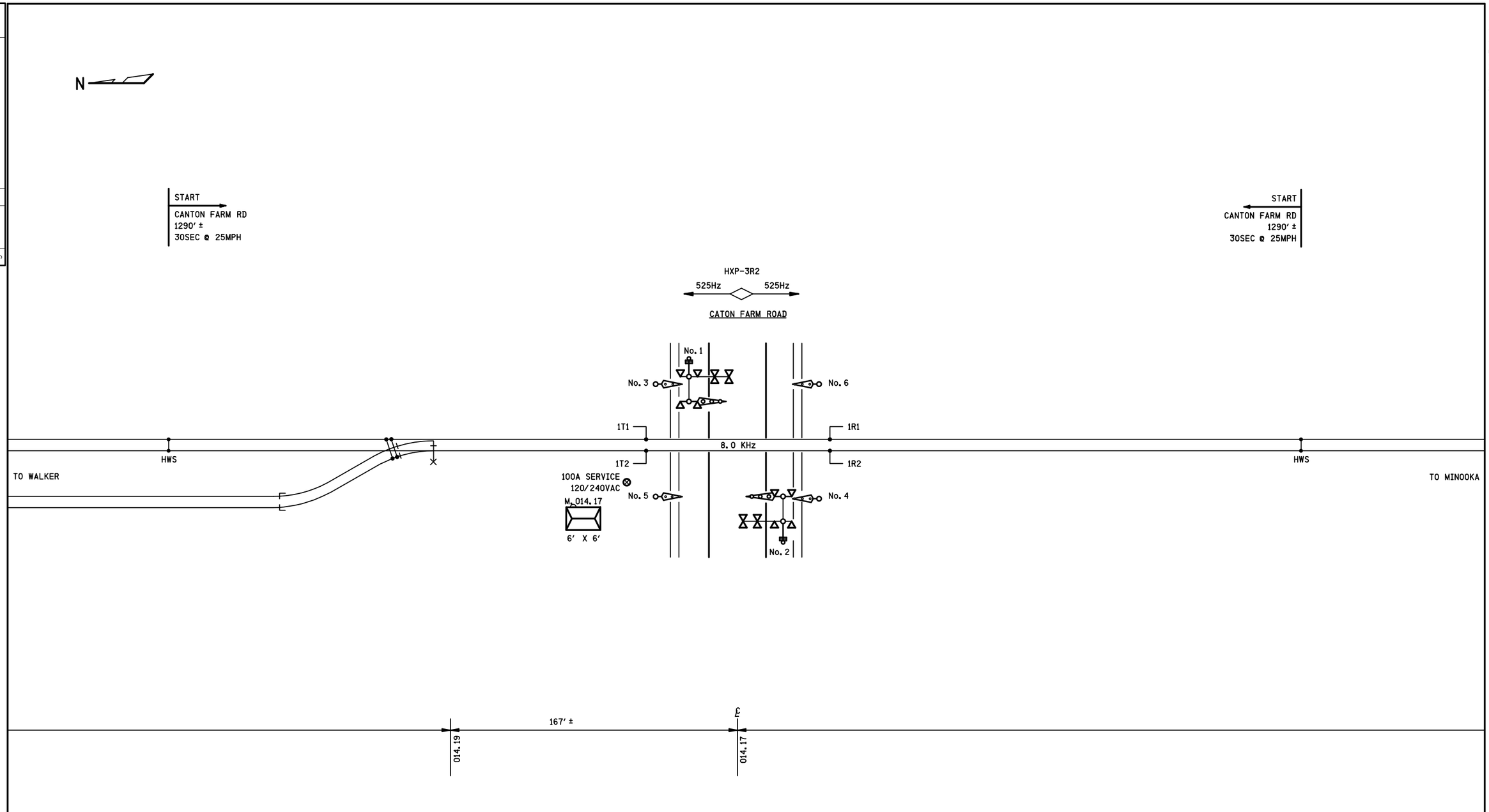

NOTE

DENOTES #6 HARD WIRE SHUNT

IRC 12 JUL 2013

PROPOSED
DESIGN NO. 12-0267
RED-IN YELLOW-OUT

AS INSTALLED
DATE _____
BY _____
(PRINT NAME)

PROPOSED			REVISIONS	D	C	COMPLETED			C
D	M	Y				D	M	Y	

REGION SOUTHERN
SUB. IL RIVER 335

SIGNALS AND COMMUNICATIONS HOMEWOOD
12 JULY 2013
DES. NDH
CH. BJW

TRACK PLAN
MILE 014.17 TO MILE 014.19

JOLIET, IL

ILR-014.17-T

INVENSYS RAIL CORPORATION

DES.: NDH	DATE: 07/12/13	JOB NO.: PICA10406	
CKD.: BJW	ISSUE DATE: N/A	EST. NO.: XP-6840	
DRN.: NDH	PLAN NO.: N/A	SHEET N/A OF N/A	
P TIME: 10:49	P DATE: 24-OCT-2013	CAD ID.: ILR-014.17-T	

INVENSYS RAIL CORP.
LOUISVILLE DIVISION, LOUISVILLE, KY

ilr-014.17-t.dgn
24-OCT-2013

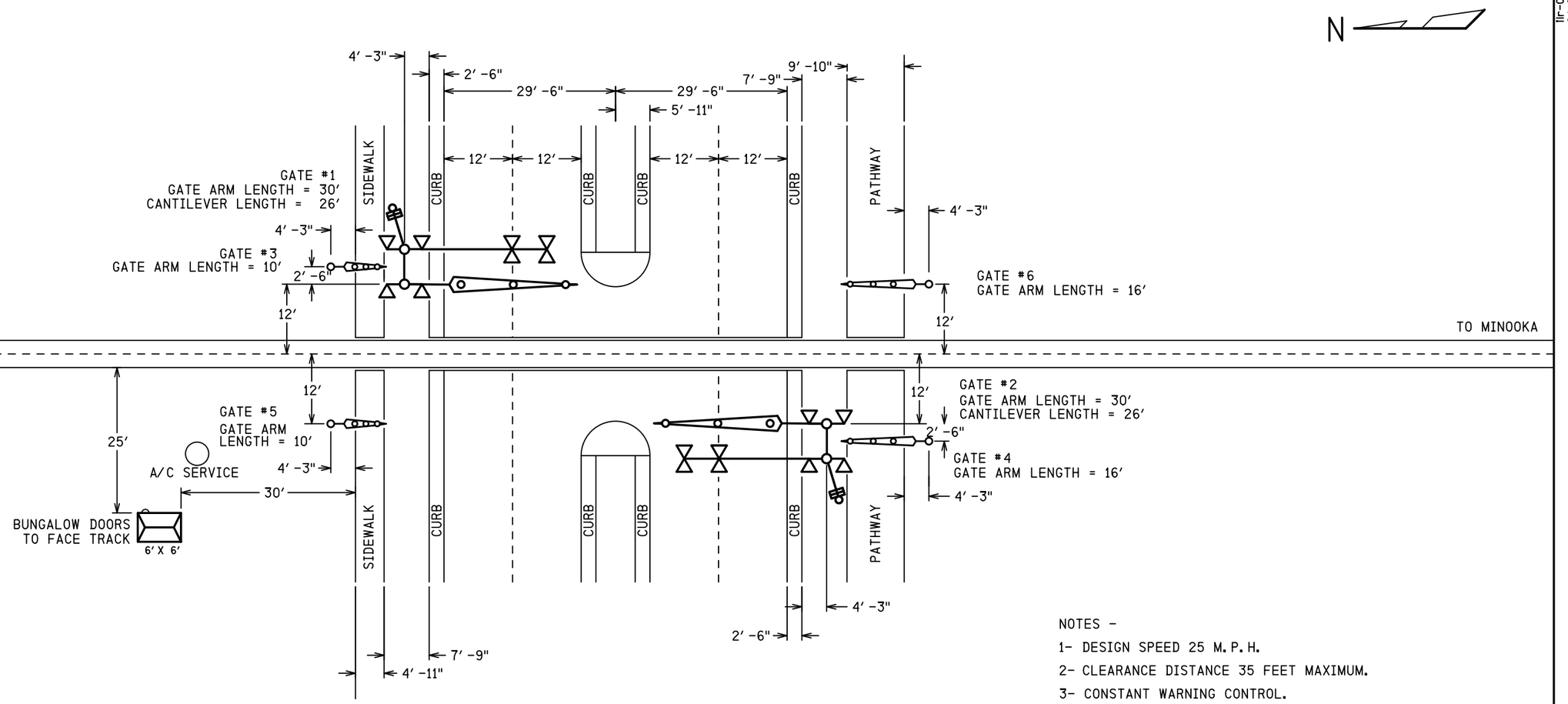

NOTES -

1- DESIGN SPEED 25 M.P.H.

2- CLEARANCE DISTANCE 35 FEET MAXIMUM.

3- CONSTANT WARNING CONTROL.

4- APPROACH CIRCUIT DISTANCE PROVIDES FOR:

TRAFFIC SIGNAL PRE-EMPTION	00 SEC.(00 SEC. ADVANCE)
MINIMUM WARNING TIME	20 SEC.
GATE DESCENT DELAY TIME	04 SEC.
BUFFER TIME	10 SEC.
EQUIPMENT REACTION TIME	05 SEC.

IRC 12 JUL 2013

PROPOSED
DESIGN NO. 12-0267
RED-IN YELLOW-OUT

AS INSTALLED
DATE _____
BY _____
(PRINT NAME)

PROPOSED D	M	Y	REVISIONS	D	C	COMPLETED D	M	Y	C

REGION SOUTHERN
SUB. IL RIVER 335

SIGNALS AND COMMUNICATIONS
HOMEWOOD
12 JULY 2013

DES. NDH
CH. BJW

SITUATION SKETCH
SCALE 1" = 20′
JOLIET, IL
CATON FARM RD

ILR-014.16-0

DOT# 261 006K

17

INVENSYS RAIL CORP.
LOUISVILLE DIVISION, LOUISVILLE, KY

ilr-014.17-0.dgn
24-OCT-2013

REVISIONS				
NO.	DATE	BY	DESCRIPTION	APP. BY
1				
2				
3				
4				
5				

FLASHING LIGHT UNITS ALIGNMENT TABLE

PRIMARY FRONT LIGHTS FOR VEHICLES							
SIG #	LIGHT #	ROUNDEL		ROAD SPEED	MINIMUM DISTANCE	RECOMMENDED DISTANCE	ALIGNMENT DISTANCE
		SIZE	TYPE	MPH	FT	FT	FT
1	1,2	12"	LED	50	540	850	
2	7,8	12"	LED	50	540	850	
1	15,16	12"	LED	50	540	850	
2	21,22	12"	LED	50	540	850	
BACK LIGHTS FOR VEHICLES							
SIG #	LIGHT #	ROUNDEL		ROAD SPEED	MINIMUM DISTANCE	RECOMMENDED DISTANCE	ALIGNMENT DISTANCE
		SIZE	TYPE	MPH	FT	FT	FT
1	3,4	12"	LED	N/A	N/A	N/A	50
2	5,6	12"	LED	N/A	N/A	N/A	50
1	17,18	12"	LED	N/A	N/A	N/A	50
2	19,20	12"	LED	N/A	N/A	N/A	50

NOTE
FIELD IS TO PROVIDE THE ACTUAL ALIGNMENT DISTANCE AS DETERMINED BY
SCP-706: ROAD CROSSING DEVICE LIGHT UNIT ALIGNMENT PROCEDURES

CONTENT	SHEET #
SITUATION SKETCH	0
TRACK LAYOUT & INDEX	01
HXP-3R2 WIRING DIAGRAM	02
HXP-3R2 PROGRAM CONFIGURATION	03
HIGHWAY CROSSING ANALYZER HCA-1	04
CRTU CIRCUITS	05
SSCCIV WITH ISOLATED GATE CROSSING CONTROLLER 40 AMP	06
SSCCIV PROGRAM DATA	07
GATE 1 MECHANISM CONTROL CIRCUITS SAFETRAN S-60	08
GATE 2 MECHANISM CONTROL CIRCUITS SAFETRAN S-60	09
GATE 3 & 4 MECHANISM CONTROL CIRCUITS SAFETRAN S-60	10
GATE 5 & 6 MECHANISM CONTROL CIRCUITS SAFETRAN S-60	11
DC DISTRIBUTION	12
AC DISTRIBUTION	13
BUNGALOW LAYOUT TOP VIEW	14
BUNGALOW LAYOUT SIDE D & L.I.G.P.	15
BUNGALOW LAYOUT SIDES A, B & C	16

ilr-014.17-01.dgn
24-OCT-2013

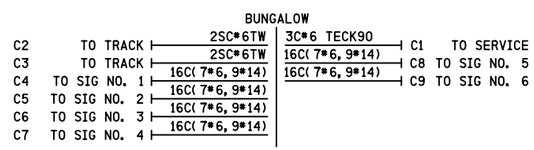

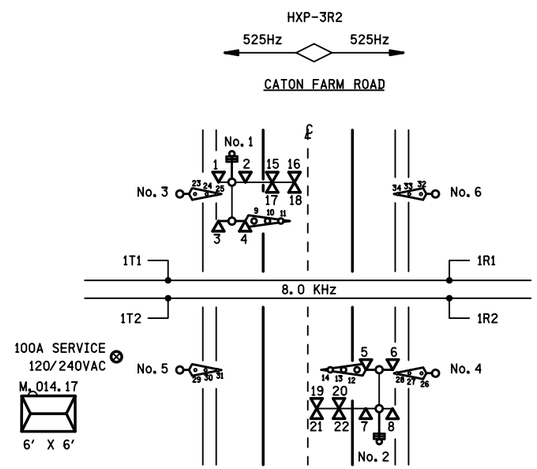

INVENSYS RAIL CORPORATION			
DES.: NDH	DATE: 07/12/13	JOB NO.: PICA10406	
CKD.: BJW	ISSUE DATE: N/A	EST. NO.: XP-6840	
DRN.: NDH	PLAN NO.: N/A	SHEET 1 OF 16	
P TIME: 10:49	P DATE: 24-OCT-2013	CAD ID.: ILR-014.17-01	

IRC 12 JUL 2013

PROPOSED
DESIGN NO. 12-0267
RED-IN YELLOW-OUT

AS INSTALLED
DATE _____
BY _____
(PRINT NAME)

PROPOSED			REVISIONS	D	C	COMPLETED			C
D	M	Y				D	M	Y	

REGION SOUTHERN
SUB. IL RIVER 335

SIGNALS AND COMMUNICATIONS HOMEWOOD — DES. NDH
12 JULY 2013 — CH. BJW

TRACK LAYOUT & INDEX

JOLIET, IL
CATON FARM RD

ILR-014.17-01

DOT# 261 006K

INVENSYS RAIL CORP.
LOUISVILLE DIVISION, LOUISVILLE, KY

REVISIONS				
NO.	DATE	BY	DESCRIPTION	APP. BY
1				
2				
3				
4				
5				

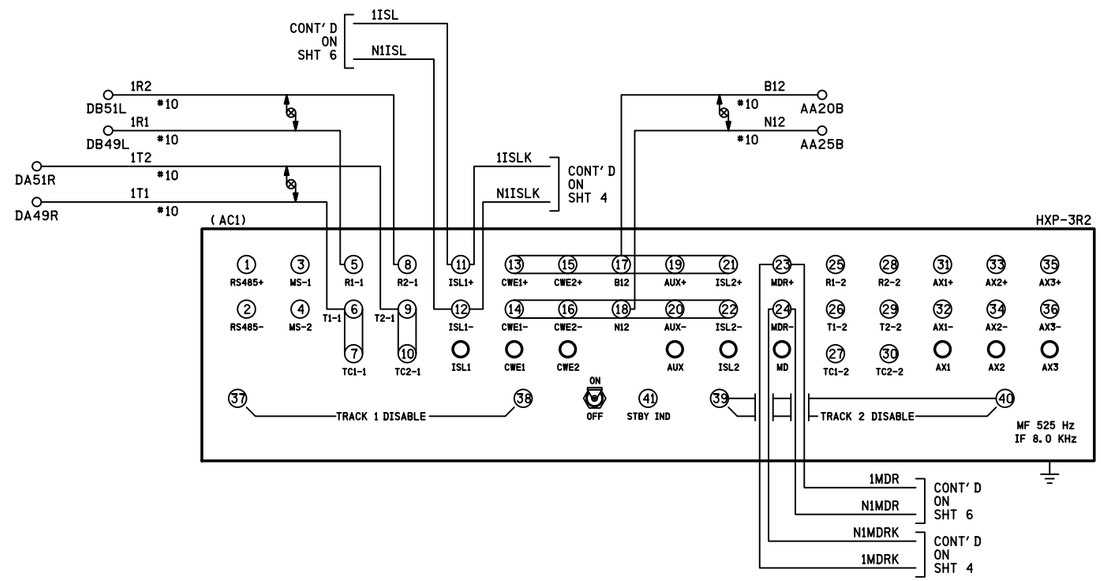

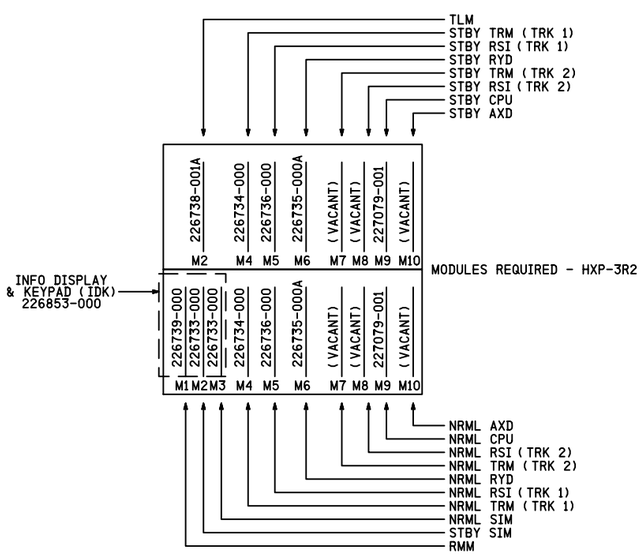

NOTES

1) ALL WIRING #16 AWG UNLESS OTHERWISE NOTED.

DENOTES TWISTED PAIR.

INVENSYS RAIL CORPORATION			
DES. : NDH	DATE: 07/12/13	JOB NO. : PICA10406	
CKD. : BJW	ISSUE DATE: N/A	EST. NO. : XP-6840	
DRN. : NDH	PLAN NO. : N/A	SHEET 2 OF 16	
P TIME: 10:49	P DATE: 24-OCT-2013	CAD ID. : ILR-014.17-02	

IRC 12 JUL 2013

PROPOSED
DESIGN NO. 12-0267
RED-IN YELLOW-OUT

AS INSTALLED
DATE _____
BY _____
(PRINT NAME)

PROPOSED			REVISIONS	D	C	COMPLETED			C
D	M	Y				D	M	Y	

REGION SOUTHERN
SUB. IL RIVER 335

SIGNALS AND COMMUNICATIONS HOMEWOOD
12 JULY 2013

DES. NDH
CH. BJW

HXP-3R2
WIRING DIAGRAM
JOLIET, IL
CATON FARM RD

ILR-014.17-02

DOT# 261 006K

INVENSYS RAIL CORP.
LOUISVILLE DIVISION, LOUISVILLE, KY

ilr-014.17-02.dgn
24-OCT-2013

REVISIONS			
NO.	DATE	BY	DESCRIPTION	APP. BY
1				
2				
3				
4				
5				

UNIT #1 — Grade Crossing Location Record

Cabinet Number (Option 90) _____

Location CATON FARM ROAD Milepost 014.17 DOT 261 006K Date 12 / 07 / 13

Operating Program HPN _____ Version _____

System Monitor Program HPN _____ Version _____

Hardware Settings

Track 1 Master [X] Slave [ ] 4 kHz [ ] 8 kHz [X]

LOS Jumper 0 [ ] 1 [X] 2 [ ] Fault Jumper 0 [X] 1 [ ]

Approach configuration switch position: Normal [X] Short [ ] Very Short [ ]

Track 2 Master [ ] Slave [ ] 4 kHz [ ] 8 kHz [ ]

LOS Jumper 0 [ ] 1 [ ] 2 [ ] Fault Jumper 0 [ ] 1 [ ]

Approach configuration switch position: Normal [ ] Short [ ] Very Short [ ]

TLM MODULE SETTINGS

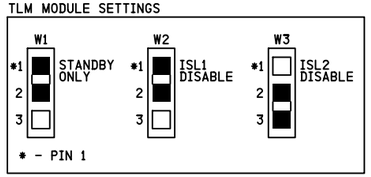

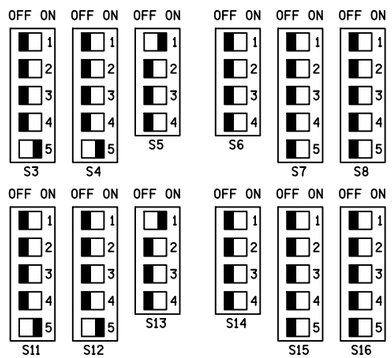

Adjust Select Adjustments

No.	Adjustment	Default	Range	Track 1	Track 2
1	Approach Length	9,999	0 - 9,999	1290 feet	feet
2	Warning Time	99	23 - 99	30 seconds	seconds
3	LIA	0	-9 to +9	steps	steps
4	TC (1 step = 32)	395	430 - 470	steps	steps
5	MD Restart	99%	0 - 99%	RX	RX

Option Adjustments

No.	Adjustment	Default	Range	Track 1	Track 2
0	RX	0	1-100		
1	TK-ENA	UP	UP or dn	UP [X] dn [ ]	UP [ ] dn [ ]
2	TK FO	0	0 - 9999	525 Hz	Hz
3	CW/MD	d	C to d	C [X] d [ ]	C [ ] d [ ]
4	UNI-BI	b	U - b	U [ ] b [X]	U [ ] b [ ]
5	NBS-C	0	0 - 99	99 RX	RX
		9,999	RX dependant	XXXX feet	XXXX feet
6	CWEWT	80	0 - 99	80 seconds	seconds
7	LOS	16	4 - 99	30 seconds	seconds
8	IJ-LOS	5	3 - 99	5 seconds	seconds
9	BC	frequency dependant	50 -250	XXX	XXX
10	P-COMP	0	0 - 10	XX degrees	XX degrees

HXP-3, HXP-3R, HXP-3R2

AX Adjustment Options

	Default	Range	Option 11 - AX1	Option 12 - AX2	Option 13 - AX3
TK-ASN		1, 2, Both	1 [ ] 2 [ ] Both [ ]	1 [ ] 2 [ ] Both [ ]	1 [ ] 2 [ ] Both [ ]
OF-TK1	0	0 - 9,999	N/A feet	N/A feet	N/A feet
OF-TK2	0	0 - 9,999	N/A feet	N/A feet	N/A feet
WT	99	23 - 99	N/A seconds	N/A seconds	N/A seconds
MD-RST	99	0 - 99%	N/A RX	N/A RX	N/A RX
CW/MD	d	C or d	C [ ] d [ ]	C [ ] d [ ]	C [ ] d [ ]
CJ-LOS	0	3 - 99	N/A seconds	N/A seconds	N/A seconds
PJ-DET	15	4 - 15	N/A seconds	N/A seconds	N/A seconds
POS-ST	dn	UP or dn	UP [ ] dn [ ]	UP [ ] dn [ ]	UP [ ] dn [ ]

No.	Adjustment	Default	Range	Track 1	Track 2
17	MDR-AX	n*	n or A	n [X] A [ ]	n [ ] A [ ]
	OF-TK1	0	0 - 9,999	N/A feet	
	OF-TK2	0	0 - 9,999		N/A feet
	CJ-LOS	0	3 - 99	N/A seconds	N/A seconds
	PJ-DET	15	4 - 15	N/A seconds	N/A seconds
18	MD-TMR	10	10-99 (0=disable)	N/A minutes	N/A minutes
19	MIN-WT	0	23-99 (0=disable)	N/A seconds	N/A seconds
20	FS-DET	0	10-30 (0=disable)	N/A minutes	N/A minutes
21	POS-RX	0	0 - 74 (0=disable)	N/A RX	N/A RX
	POS-TM	0	0 - 99**	N/A minutes	N/A minutes
22	AR-TMR	0	0-80 (0=disable)	N/A minutes	N/A minutes
47	ATO-RX	dn	UP or dn	UP [X] dn [ ]	UP [ ] dn [ ]
48	PF-ENA	UP	UP or dn	UP [X] dn [ ]	UP [ ] dn [ ]

***n = not an AX drive (no options available)**
****0 = disable, 99 = continuous**

Shunt Record

West Approach		No Shunt RX	No Shunt Phase	100% Shunt RX	100% Shunt Phase		50% Shunt RX	50% Shunt Phase	LIA Added % 1 to 9
Track 1	Normal	--	--	--	--	--	--	--	--
	Standby	--	--	--	--	--	--	--	--
Track 2	Normal	--	--	--	--	--	--	--	--
	Standby	--	--	--	--	--	--	--	--
East Approach									
Track 1	Normal	XX	XX	XX	XX	--	XX	XX	XX
	Standby	XX	XX	--	--	--	--	--	--
Track 2	Normal	--	--	--	--	--	--	--	--
	Standby	--	--	--	--	--	--	--	--

IRC 12 JUL 2013

PROPOSED
DESIGN NO. 12-0267
RED-IN YELLOW-OUT

AS INSTALLED
DATE _____
BY _____
(PRINT NAME)

PROPOSED D	M	Y	REVISIONS	D	C	COMPLETED D	M	Y	C

REGION SOUTHERN
SUB. IL RIVER 335

SIGNALS AND COMMUNICATIONS HOMEWOOD
12 JULY 2013
DES. NDH
CH. BJW

HXP-3R2
PROGRAM CONFIGURATION
JOLIET, IL
CATON FARM RD

ILR-014.17-03

DOT# 261 006K

INVENSYS RAIL CORPORATION

DES. : NDH	DATE: 07/12/13	JOB NO. : PICA10406	
CKD. : BJW	ISSUE DATE: N/A	EST. NO. : XP-6840	
DRN. : NDH	PLAN NO. : N/A	SHEET 3 OF 16	
P TIME: 10:49	P DATE: 24-OCT-2013	CAD ID. : ILR-014.17-03	

INVENSYS RAIL CORP.
LOUISVILLE DIVISION, LOUISVILLE, KY

ilr-014.17-03.dgn
24-OCT-2013

REVISIONS				
NO.	DATE	BY	DESCRIPTION	APP. BY
1				
2				
3				
4				
5				

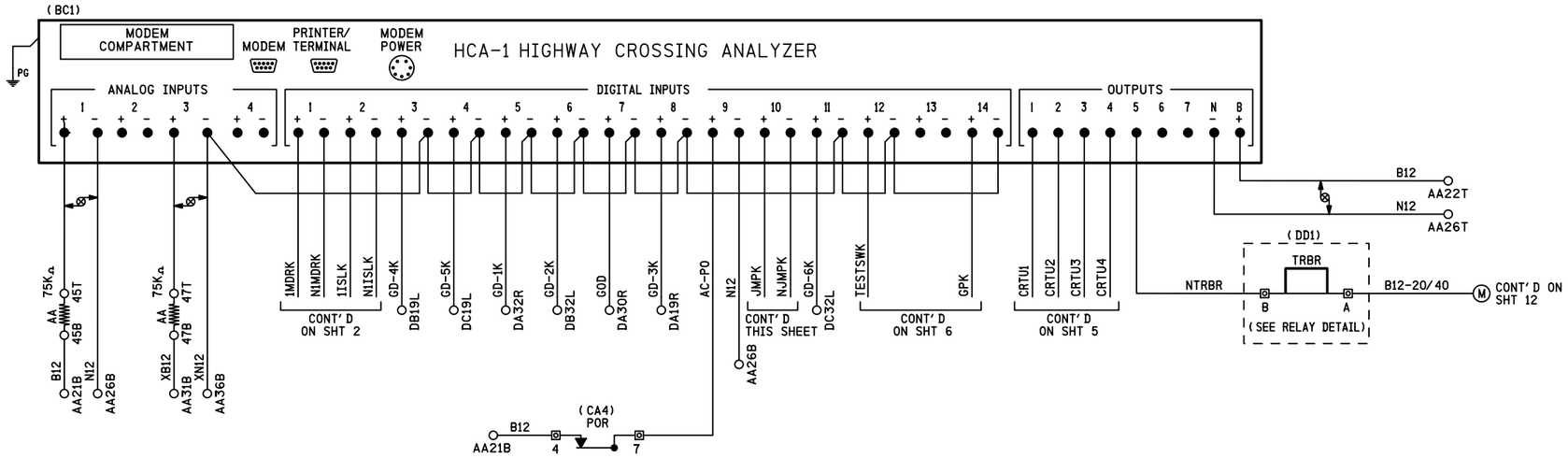

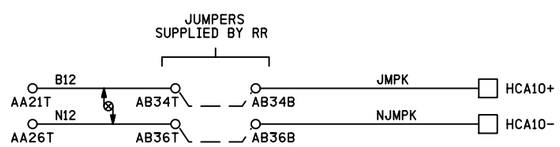

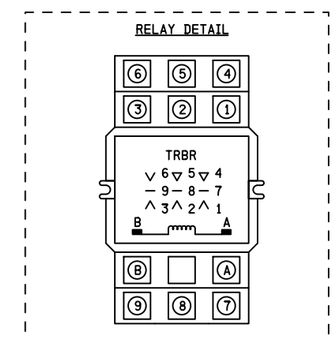

RELAY - POTTER & BRUMFIELD
MODEL KUMP-14D18-12 SOCKET MOUNTABLE
12 VDC W/ 3 FORM C CONTACTS.

SOCKET - SCREW TERMINAL
MODEL 27E121

PART OF POWER OFF INDICATOR REPEATER RELAY JUNCTION BOX

NOTES

1) ALL WIRING #16 AWG UNLESS OTHERWISE NOTED.

DENOTES TWISTED PAIR.

IRC 12 JUL 2013

PROPOSED
DESIGN NO. 12-0267
RED-IN YELLOW-OUT

AS INSTALLED
DATE _____
BY _____
(PRINT NAME)

PROPOSED D	M	Y	REVISIONS	D	C	COMPLETED D	M	Y	C

REGION SOUTHERN
SUB. IL RIVER 335

SIGNALS AND COMMUNICATIONS HOMEWOOD
12 JULY 2013
DES. NDH
CH. BJW

HIGHWAY CROSSING ANALYZER
HCA-1
JOLIET, IL
CATON FARM RD

ILR-014.17-04

DOT# 261 006K

INVENSYS RAIL CORPORATION			
DES.: NDH	DATE: 07/12/13	JOB NO.: PICA10406	
CKD.: BJW	ISSUE DATE: N/A	EST. NO.: XP-6840	
DRN.: NDH	PLAN NO.: N/A	SHEET 4 OF 16	
P TIME: 10:50	P DATE: 24-OCT-2013	CAD ID.: ILR-014.17-04	

INVENSYS RAIL CORP.
LOUISVILLE DIVISION, LOUISVILLE, KY

ilr-014.17-04.dgn
24-OCT-2013

REVISIONS				
NO.	DATE	BY	DESCRIPTION	APP. BY
1				
2				
3				
4				
5				

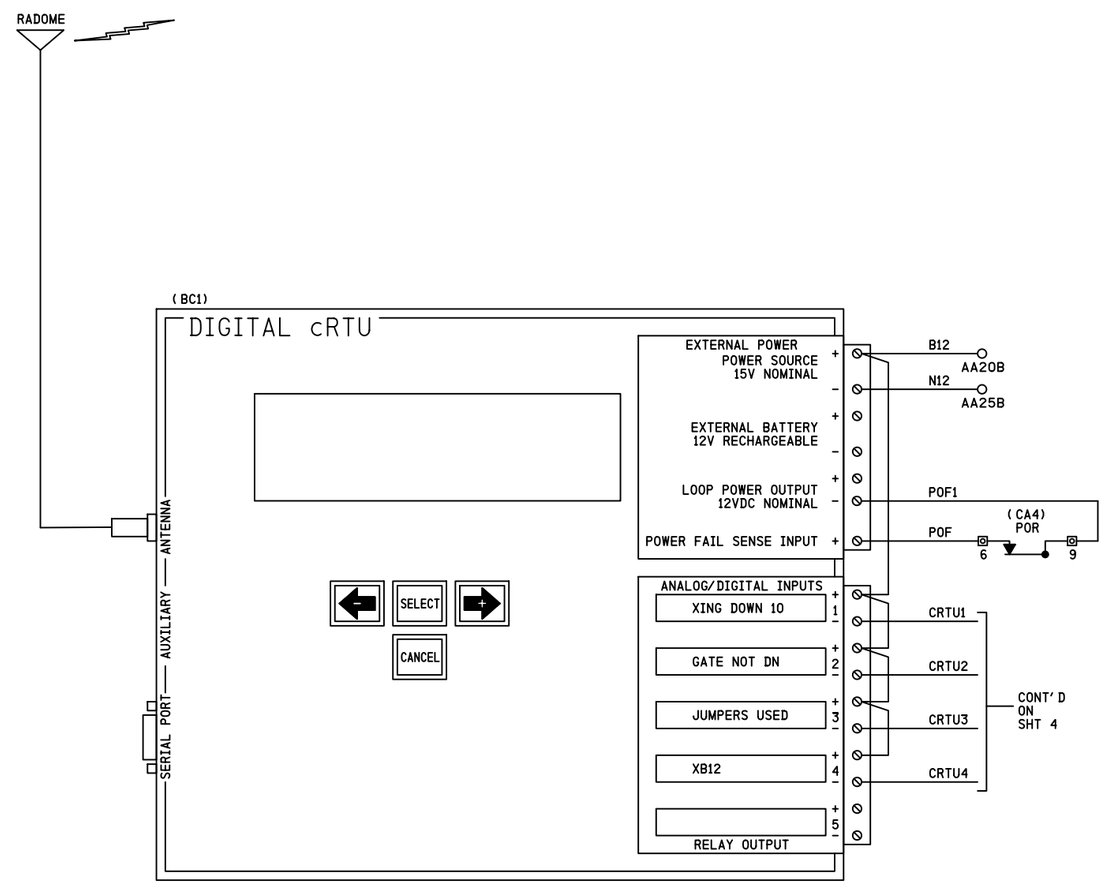

CONFIGKEY:	30
MODEL:	C06C/2ANA V2.3
SERIAL #:	
SITE IDENTIFIER:	DOT# 261 006K

* FIELD TO PROVIDE SERIAL *

	LOW ALARM	RETURN	HIGH ALARM	RETURN
B12	11.6	12.6	15.6	14.6
XB12	13.8	14.8	17.8	16.8

NOTE

1) ALL WIRING #16 AWG UNLESS OTHERWISE NOTED.

IRC 12 JUL 2013

PROPOSED
DESIGN NO. 12-0267
RED-IN YELLOW-OUT

AS INSTALLED
DATE _____
BY _____
(PRINT NAME)

PROPOSED			REVISIONS	D	C	COMPLETED			C
D	M	Y				D	M	Y	

REGION SOUTHERN
SUB. IL RIVER 335

SIGNALS AND COMMUNICATIONS HOMEWOOD
12 JULY 2013
DES. NDH
CH. BJW

CRTU CIRCUITS

JOLIET, IL
CATON FARM RD

ILR-014.17-05

DOT# 261 006K

INVENSYS RAIL CORPORATION

DES.: NDH	DATE: 07/12/13	JOB NO.: PICA10406	
CKD.: BJW	ISSUE DATE: N/A	EST. NO. XP-6840	
DRN.: NDH	PLAN NO.: N/A	SHEET 5 OF 16	
P TIME: 10:50	P DATE: 24-OCT-2013	CAD ID.: ILR-014.17-05	

INVENSYS RAIL CORP.
LOUISVILLE DIVISION, LOUISVILLE, KY

ilr-014.17-05.dgn
24-OCT-2013

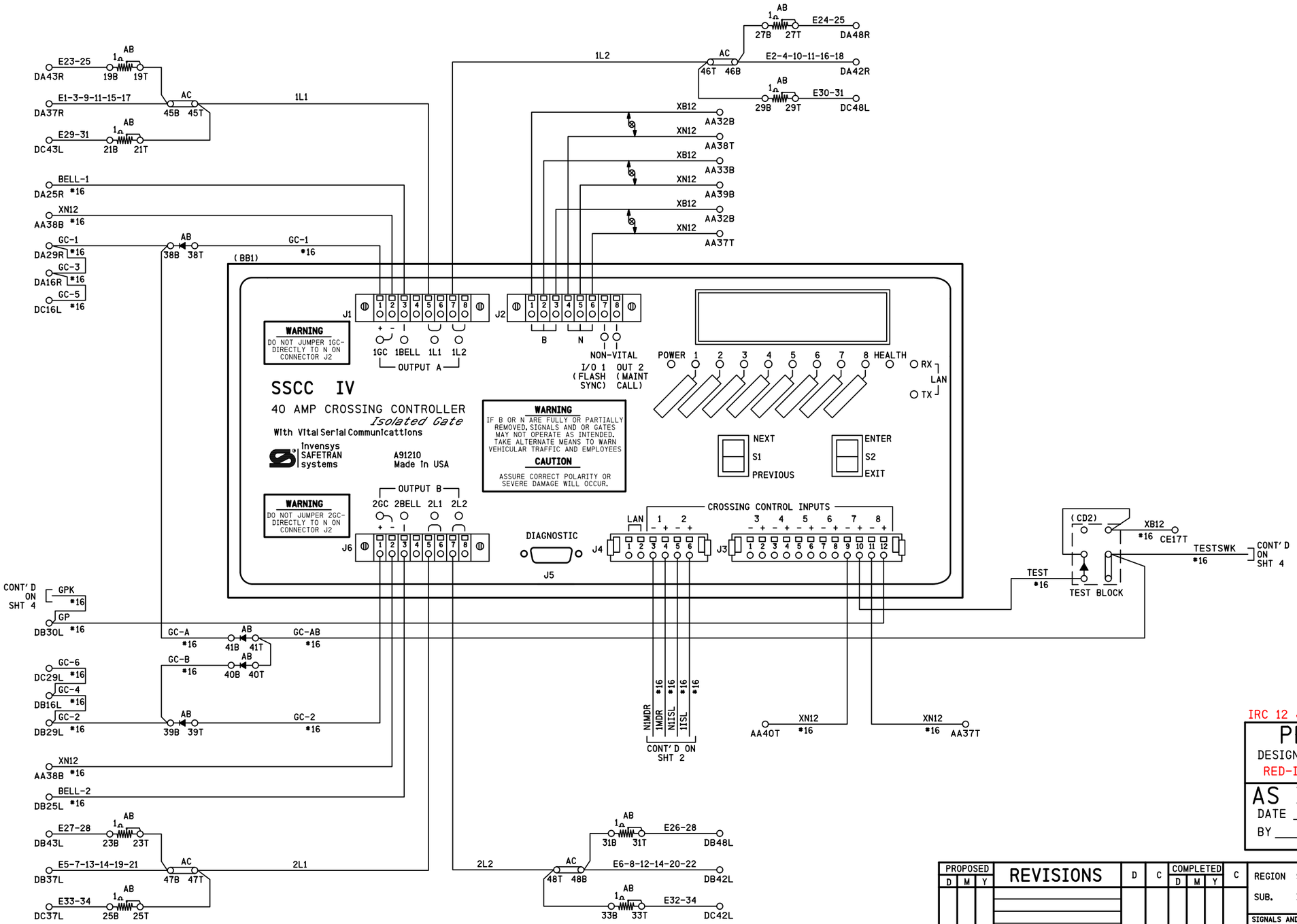

NOTES

1) DENOTES RECTIFIER : (SAFETRAN *8008A299006)

2) DENOTES TWISTED PAIR.

3) ALL WIRING #10 AWG UNLESS OTHERWISE NOTED.

REVISIONS				
NO.	DATE	BY	DESCRIPTION	APP. BY
1				
2				
3				
4				
5				

INVENSYS RAIL CORPORATION			
DES. : NDH	DATE: 07/12/13	JOB NO. : PICAI0406	
CKD. : BJW	ISSUE DATE: N/A	EST. NO. :XP-6840	
DRN. : NDH	PLAN NO. :N/A	SHEET 6 OF 16	
P TIME:10:50	P DATE: 24-OCT-2013	CAD ID. :ILR-014.17-06	

ILR-014.17-06.dgn
24-OCT-2013

IRC 12 JUL 2013

PROPOSED
DESIGN NO. 12-0267
RED-IN YELLOW-OUT

AS INSTALLED
DATE _____
BY _____
(PRINT NAME)

PROPOSED			REVISIONS	D	C	COMPLETED			C
D	M	Y				D	M	Y	

REGION SOUTHERN
SUB. IL RIVER 335

SIGNALS AND COMMUNICATIONS HOMEWOOD
DES. NDH
12 JULY 2013
CH. BJW

SSCCIV WITH ISOLATED GATE CROSSING CONTROLLER 40 AMP
JOLIET, IL
CATON FARM RD

ILR-014.17-06

DOT# 261 006K

INVENSYS RAIL CORP.
LOUISVILLE DIVISION, LOUISVILLE, KY

REVISIONS				
NO.	DATE	BY	DESCRIPTION	APP. BY
1				
2				
3				
4				
5				

CROSSING CONTROLLER SSCCIV 40-AMPERE UNIT, A91210

PROGRAM	NOTES	INITIAL SETTING BY: _____ DATE: _____
FLASH RATE:	30-70 FLASHES/MINUTE DEFAULT = 50	55 FLASHES/MINUTE
GATES USED:	YES/NO DEFAULT = YES	☑ YES ☐ NO
1 GC DELAY:	3-20 SEC., DEFAULT = 4	4 SECONDS
2 GC DELAY (40 AMP UNIT):	3-20 SEC., DEFAULT = 4	4 SECONDS
GATE RISING BELL:	ON/OFF, DEFAULT = ON	☐ ON ☑ OFF
ENABLED INPUTS:	1 THRU 7 ONLY	☑1 ☑2 ☐3 ☐4 ☐5 ☐6 ☑7
GC2/I7:	GC2 NORMAL, I7 = NORMAL GC2 INVERTED, I7 = NORMAL GC2 PRMT RELAY, I7 = PRMT HEALTH GC2 BEACONFDBK	☑ NORMAL ☐ INVERTED ☐ PRE-EMPT SIM ☐ PRE-EMPT ADV ☐ BEACON
INPUT 7	INPUT, PRMT HLTH, TEST SW	☐ IN ☐ HEALTH ☑ TEST SW
TEST SW 2TRKDSTK ONLY	ACTIVATE, ACT & STICK RELEASE	☐ ACTIVATE ☐ ACT & REL
ADV PRE-EMPT TIME (40A):	1-99 SEC., DEFAULT = 1	N/A SECONDS
MIN ACTIVATION TIME:	0-99 SEC., DEFAULT = 20	20 SECONDS
STICK RELEASE TIME:	5-120 MIN., DEFAULT = 15	N/A MINUTES
BEACON PICK-UP DELAY	5-600 SEC., DEFAULT = 20	N/A SECONDS
SUP ISLAND TIME:	5-20 MIN., DEFAULT = 20	N/A MINUTES
ENABLED OUTPUTS: (40 amp only)	DEFAULT = A + B	☑ A + B ☐ A ☐ B
DAYLIGHT SAVINGS:	DEFAULT = DISABLED	☑ ENABLED ☐ DISABLED
DATE:	N/A	☐ DATE SET
TIME:	24-FORMAT	☐ TIME SET
PASSWORD:	DEFAULT = DISABLED	☐ ENABLED ☑ DISABLED
CONFIGURE		
LOS TIMERS:	0-20 SECONDS, INPUTS 1-7 ONLY DEFAULT = 0	1: 0 SEC 5: 0 SEC 2: 0 SEC 6: 0 SEC 3: 0 SEC 7: 0 SEC 4: 0 SEC
MCF:		MCF: BASICPLS CRC: 731AF326
ATCS ADDRESS:	DEFAULT = 700000000000	
LOW BATTERY:	9.0-15.0 VOLTS, OR DISABLED DEFAULT = DISABLED	☑ DISABLED ☐ ENABLED _____ VOLTS
AUX I/O:	DEFAULT = NONVITAL OUTPUT	☑ NV OUTPUT ☐ FLASH SYNC IN ☐ FLASH SYNC OUT
DETECT LAMP NEUTRAL WIRE	DEFAULT = YES	☐ YES ☑ NO
TEST CONFIGURE		
LAMP TEST CANCEL TIMER:	1-15 MINUTES, DEFAULT = 5	5 MINUTES
LAMP TEST DELAY TIMER:	30-120 SEC., DEFAULT = 30	30 SEC.
LAMP TEST ON TIMER:	15-60 SEC., DEFAULT = 15	15 SEC.

STANDARD SETUP LAMP VOLTAGES PROCEDURE
USING TRUE RMS AC+DC METER, OR CONVERSION TABLE BELOW

SETUP LAMP VOLTAGES	INITIAL SETTINGS BY: _____ DATE: _____ METER: _____
FAR GATE	1 L1 = _____ VOLTS 1 L2 = _____ VOLTS 2 L1 = _____ VOLTS 2 L2 = _____ VOLTS
SSCCIV	1 L1 = _____ VOLTS 1 L2 = _____ VOLTS 2 L1 = _____ VOLTS 2 L2 = _____ VOLTS
NEAR GATE	1 L1 = _____ VOLTS 1 L2 = _____ VOLTS 2 L1 = _____ VOLTS 2 L2 = _____ VOLTS

MULTIMETER READING VARIANCE FROM ACTUAL LAMP VOLTAGE

BATTERY BANK VOLTAGE	VALID LAMP OUTPUT RANGE (In volts)	DIGITAL METER (FLUKE 87 OR EQUIVALENT)	ANALOG METER (SIMPSON 260 OR TS111)
13.3	9.0 TO 12.0	1.3 VOLTS BELOW ACTUAL VALUE	0.6 VOLTS BELOW ACTUAL VALUE
14.7	9.0 TO 12.0	2.2 VOLTS BELOW ACTUAL VALUE	1.1 VOLTS BELOW ACTUAL VALUE
15.8	9.0 TO 12.0	2.6 VOLTS BELOW ACTUAL VALUE	2.0 VOLTS BELOW ACTUAL VALUE

FOR LAMP OUTPUT SETTINGS GREATER THAN 12.0 VOLTS, REDUCE THE LISTED VALUES BY 30%
LAMP VOLTAGE MEASUREMENTS SHOULD BE ACCURATE TO 0.3 VOLTS.

SOFTWARE VERSION: 9V546-A01.N

IRC 12 JUL 2013

PROPOSED
DESIGN NO. 12-0267
RED-IN YELLOW-OUT

AS INSTALLED
DATE _____
BY _____
(PRINT NAME)

PROPOSED D	M	Y	REVISIONS	D	C	COMPLETED D	M	Y	C

REGION SOUTHERN
SUB. IL RIVER 335
CN

SIGNALS AND COMMUNICATIONS HOMEWOOD
12 JULY 2013
DES. NDH
CH. BJW

SSCCIV
PROGRAM DATA
JOLIET, IL
CATON FARM RD

ILR-014.17-07

DOT# 261 006K

ilr-014.17-07.dgn
24-OCT-2013

INVENSYS RAIL CORPORATION

DES.: NDH	DATE: 07/12/13	JOB NO.: PICA10406	
CKD.: BJW	ISSUE DATE: N/A	EST. NO.: XP-6840	
DRN.: NDH	PLAN NO.: N/A	SHEET 7 OF 16	
P TIME: 10:50	P DATE: 24-OCT-2013	CAD ID.: ILR-014.17-07	

INVENSYS RAIL CORP.
LOUISVILLE DIVISION, LOUISVILLE, KY

REVISIONS			
NO.	DATE	BY	DESCRIPTION	APP. BY
1				
2				
3				
4				
5				

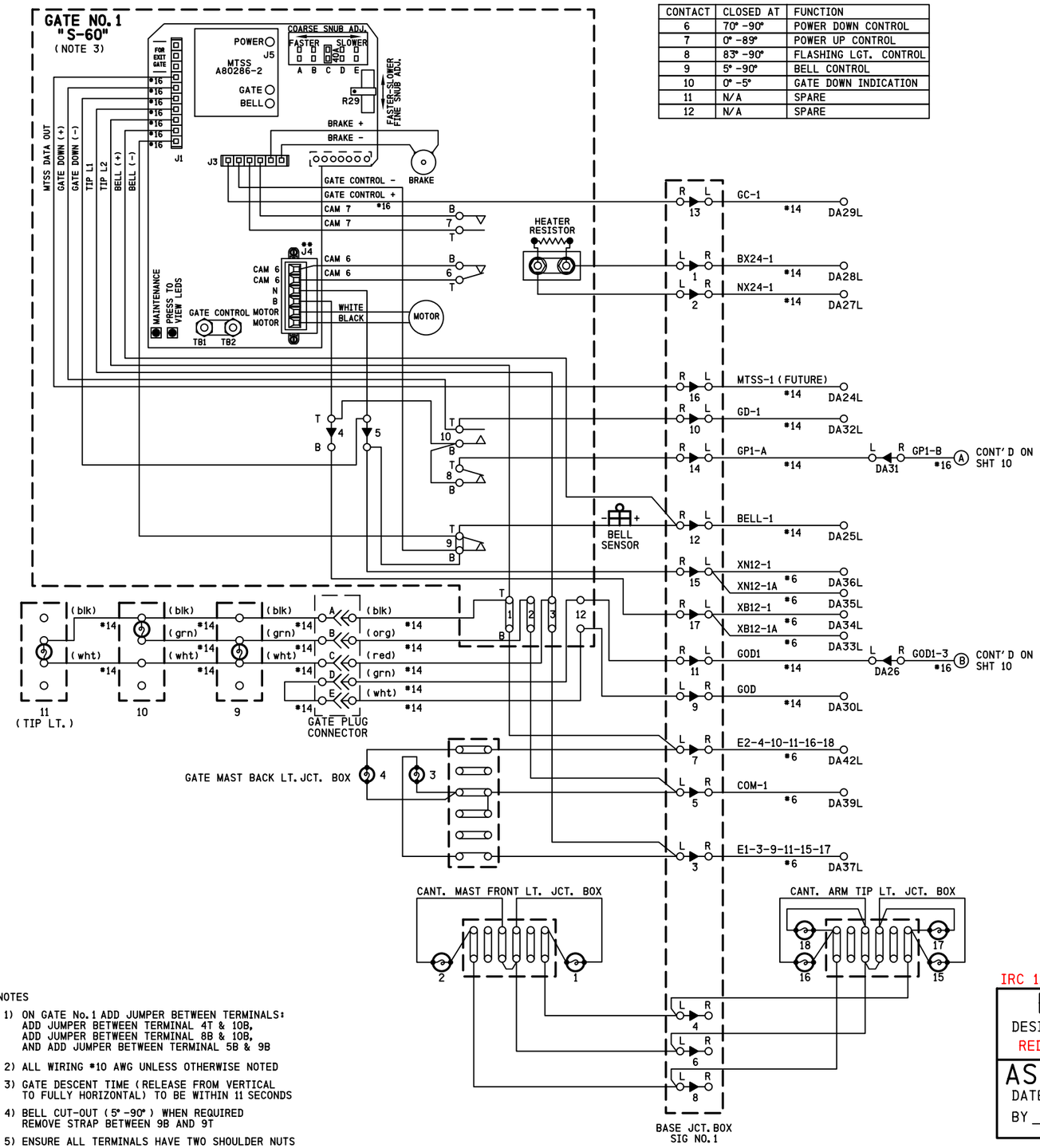

CONTACT	CLOSED AT	FUNCTION
6	70°-90°	POWER DOWN CONTROL
7	0°-89°	POWER UP CONTROL
8	83°-90°	FLASHING LGT. CONTROL
9	5°-90°	BELL CONTROL
10	0°-5°	GATE DOWN INDICATION
11	N/A	SPARE
12	N/A	SPARE

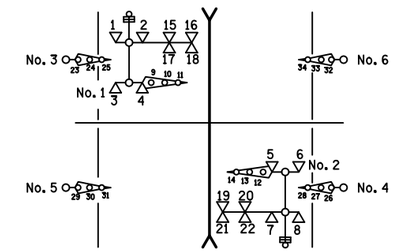

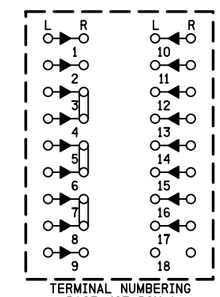

TERMINAL NUMBERING
BASE JCT. BOX 1

ON CANT. No. 1 ADD STRAP BETWEEN TERMINALS:
ADD STRAP BETWEEN TERMINAL 3R & 4R,
ADD STRAP BETWEEN TERMINAL 5R & 6R
AND ADD STRAP BETWEEN TERMINAL 7R & 8R.

NOTES

1) ON GATE No. 1 ADD JUMPER BETWEEN TERMINALS:
ADD JUMPER BETWEEN TERMINAL 4T & 10B,
ADD JUMPER BETWEEN TERMINAL 8B & 10B,
AND ADD JUMPER BETWEEN TERMINAL 5B & 9B

2) ALL WIRING #10 AWG UNLESS OTHERWISE NOTED

3) GATE DESCENT TIME (RELEASE FROM VERTICAL TO FULLY HORIZONTAL) TO BE WITHIN 11 SECONDS

4) BELL CUT-OUT (5°-90°) WHEN REQUIRED
REMOVE STRAP BETWEEN 9B AND 9T

5) ENSURE ALL TERMINALS HAVE TWO SHOULDER NUTS

IRC 12 JUL 2013

PROPOSED
DESIGN NO. 12-0267
RED-IN YELLOW-OUT

AS INSTALLED
DATE _____
BY _____
(PRINT NAME)

PROPOSED D	M	Y	REVISIONS	D	C	COMPLETED D	M	Y	C

REGION SOUTHERN
SUB. IL RIVER 335

SIGNALS AND COMMUNICATIONS HOMEWOOD
12 JULY 2013
DES. NDH
CH. BJW

GATE 1 MECH. CONTROL CIRCUITS
SAFETRAN S-60
JOLIET, IL
CATON FARM RD

ILR-014.17-08

DOT# 261 006K

INVENSYS RAIL CORPORATION		
DES.: NDH	DATE: 07/12/13	JOB NO.: PICA10406
CKD.: BJW	ISSUE DATE: N/A	EST. NO.: XP-6840
DRN.: NDH	PLAN NO.: N/A	SHEET 8 OF 16
P TIME: 10:50	P DATE: 24-OCT-2013	CAD ID.: ILR-014.17-08

INVENSYS RAIL CORP.
LOUISVILLE DIVISION, LOUISVILLE, KY

ilr-014.17-08.dgn
24-OCT-2013

CONTACT	CLOSED AT	FUNCTION
6	70° -90°	POWER DOWN CONTROL
7	0° -89°	POWER UP CONTROL
8	83° -90°	FLASHING LGT. CONTROL
9	5° -90°	BELL CONTROL
10	0° -5°	GATE DOWN INDICATION
11	N/A	SPARE
12	N/A	SPARE

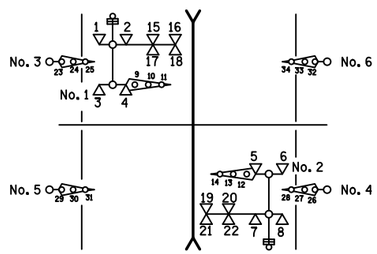

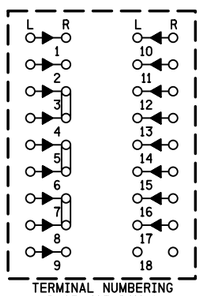

TERMINAL NUMBERING
BASE JCT. BOX 2

ON CANT. No. 2 ADD STRAP BETWEEN TERMINALS:
ADD STRAP BETWEEN TERMINAL 3R & 4R,
ADD STRAP BETWEEN TERMINAL 5R & 6R
AND ADD STRAP BETWEEN TERMINAL 7R & 8R.

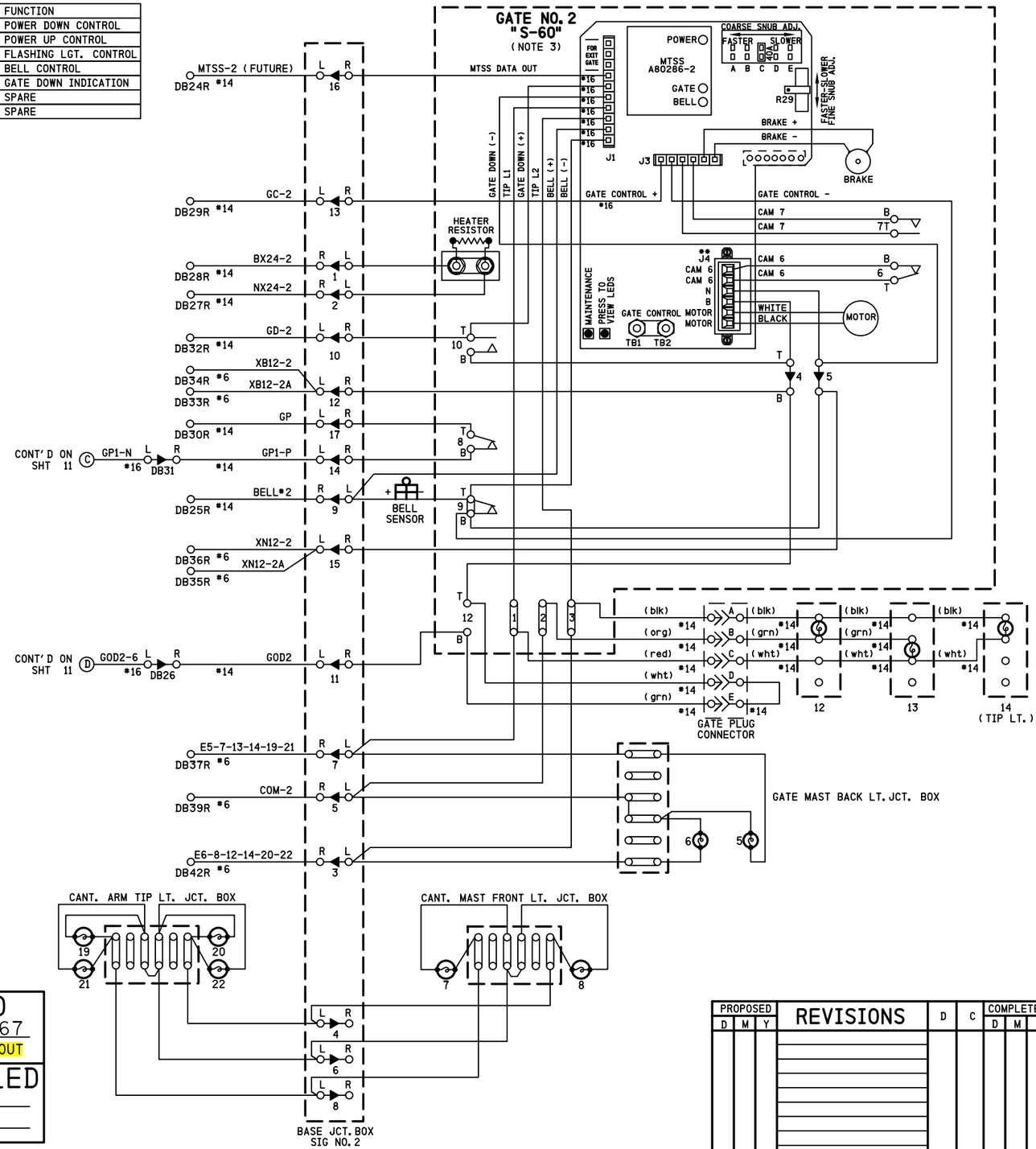

NOTES

1) ON GATE No. 2 ADD JUMPER BETWEEN TERMINALS:
   ADD JUMPER BETWEEN TERMINAL 4T &10B,
   ADD JUMPER BETWEEN TERMINAL 5B & 9B,
   AND ADD JUMPER BETWEEN TERMINAL 4B & 12T
2) ALL WIRING #10 AWG UNLESS OTHERWISE NOTED
3) GATE DESCENT TIME (RELEASE FROM VERTICAL TO FULLY HORIZONTAL) TO BE WITHIN 11 SECONDS
4) BELL CUT-OUT (5°-90°) WHEN REQUIRED REMOVE STRAP BETWEEN 9B AND 9T
5) ENSURE ALL TERMINALS HAVE TWO SHOULDER NUTS

IRC 12 JUL 2013

PROPOSED
DESIGN NO. 12-0267
RED-IN YELLOW-OUT

AS INSTALLED
DATE _____
BY _____
(PRINT NAME)

PROPOSED D	M	Y	REVISIONS	D	C	COMPLETED D	M	Y	C

REGION SOUTHERN
SUB. IL RIVER 335

SIGNALS AND COMMUNICATIONS HOMEWOOD
12 JULY 2013
DES. NDH
CH. BJW

GATE 2 MECH. CONTROL CIRCUITS
SAFETRAN S-60
JOLIET, IL
CATON FARM RD

ILR-014.17-09

DOT# 261 006K

INVENSYS RAIL CORP.
LOUISVILLE DIVISION, LOUISVILLE, KY

REVISIONS				
NO.	DATE	BY	DESCRIPTION	APP. BY
1				
2				
3				
4				
5				

INVENSYS RAIL CORPORATION

DES. : NDH	DATE: 07/12/13	JOB NO.: PICA10406	
CKD. : BJW	ISSUE DATE: N/A	EST. NO.: XP-6840	
DRN. : NDH	PLAN NO.: N/A	SHEET 9 OF 16	
P TIME: 10:50	P DATE: 24-OCT-2013	CAD ID.: ILR-014.17-09	

ilr-014.17-09.dgn
24-OCT-2013

CONTACT	CLOSED AT	FUNCTION
6	70° -90°	POWER DOWN CONTROL
7	0° -89°	POWER UP CONTROL
8	83° -90°	FLASHING LGT. CONTROL
9	5° -90°	BELL CONTROL
10	0° -5°	GATE DOWN INDICATION
11	N/A	SPARE
12	N/A	SPARE

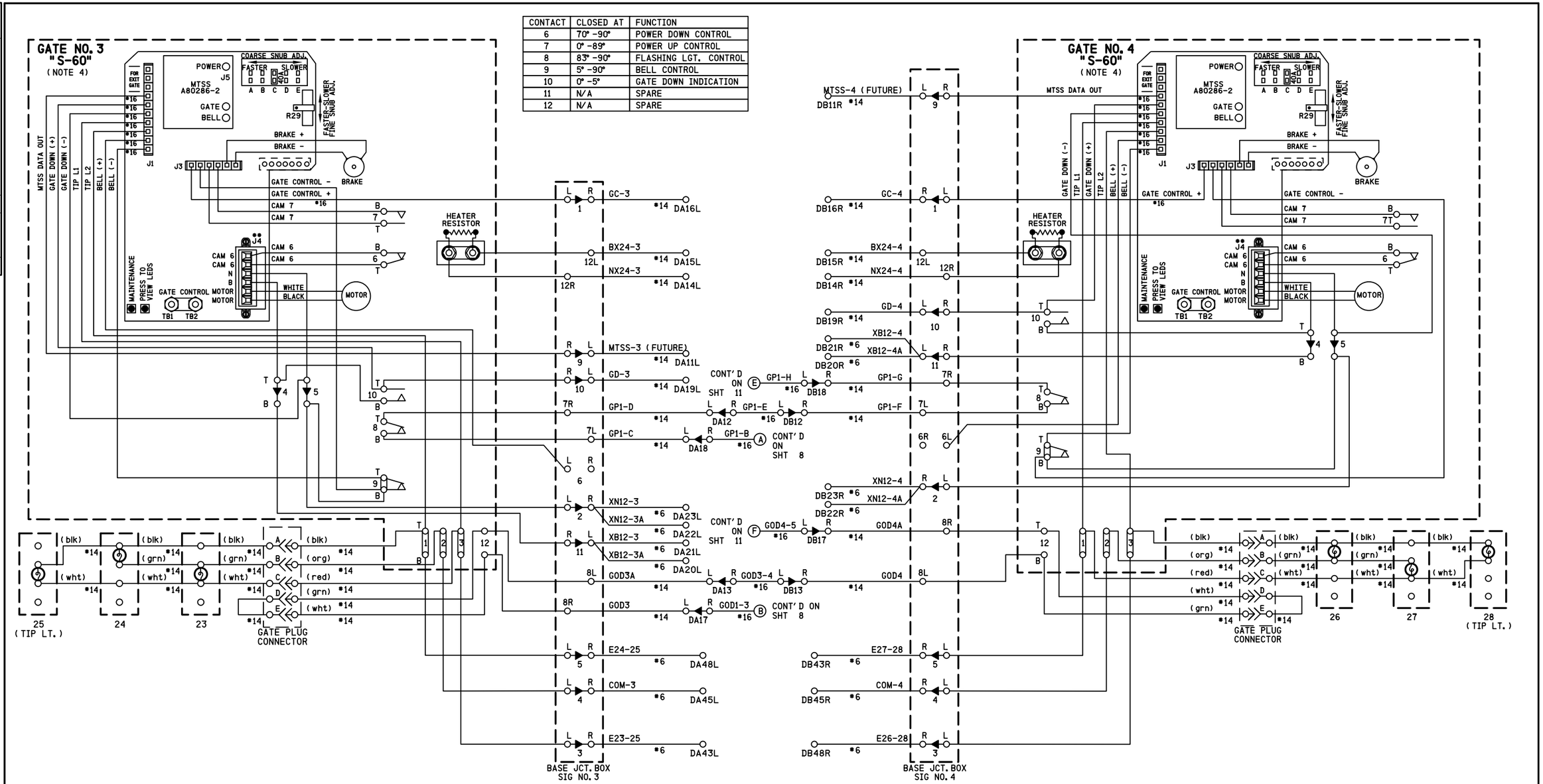

NOTES

1) ON GATE No. 3 ADD JUMPER BETWEEN TERMINALS:
   ADD JUMPER BETWEEN TERMINAL 4T & 10B,
   ADD JUMPER BETWEEN TERMINAL 5B & 9B
2) ON GATE No. 4 ADD JUMPER BETWEEN TERMINALS:
   ADD JUMPER BETWEEN TERMINAL 4T &10B,
   ADD JUMPER BETWEEN TERMINAL 5B & 9B,
3) ALL WIRING #10 AWG UNLESS OTHERWISE NOTED
4) GATE DESCENT TIME (RELEASE FROM VERTICAL TO FULLY HORIZONTAL) TO BE WITHIN 11 SECONDS
5) BELL CUT-OUT (5°-90°) WHEN REQUIRED REMOVE STRAP BETWEEN 9B AND 9T
6) ENSURE ALL TERMINALS HAVE TWO SHOULDER NUTS

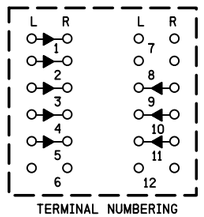

TERMINAL NUMBERING
BASE JCT. BOX 3

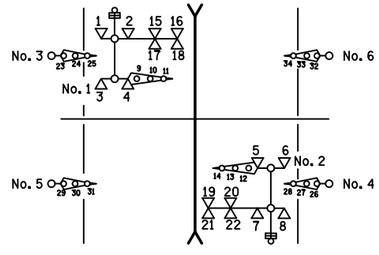

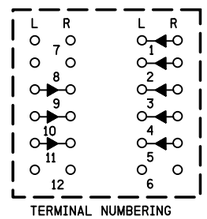

TERMINAL NUMBERING
BASE JCT. BOX 4

IRC 12 JUL 2013

PROPOSED
DESIGN NO. 12-0267
RED-IN YELLOW-OUT

AS INSTALLED
DATE _____
BY _____
(PRINT NAME)

PROPOSED D	PROPOSED M	PROPOSED Y	REVISIONS	D	C	COMPLETED D	COMPLETED M	COMPLETED Y	C

REGION SOUTHERN
SUB. IL RIVER 335

SIGNALS AND COMMUNICATIONS HOMEWOOD
12 JULY 2013
DES. NDH
CH. BJW

GATE 3 & 4 MECH. CONTROL CIRCUITS
SAFETRAN S-60
JOLIET, IL
CATON FARM RD

ILR-014.17-10

DOT# 261 006K

REVISIONS			
NO.	DATE	BY	DESCRIPTION
1			
2			
3			
4			
5			

INVENSYS RAIL CORPORATION			
DES.: NDH	DATE: 07/12/13	JOB NO.: PICA10406	
CKD.: BJW	ISSUE DATE: N/A	EST. NO.: XP-6840	
DRN.: NDH	PLAN NO.: N/A	SHEET 10 OF 16	
P. TIME: 10:51	P. DATE: 24-OCT-2013	CAD ID.: ILR-014.17-10	

INVENSYS RAIL CORP.
LOUISVILLE DIVISION, LOUISVILLE, KY

ilr-014.17-10.dgn
24-OCT-2013

NO.	DATE	BY	DESCRIPTION	APP. BY
1				
2				
3				
4				
5				

REVISIONS

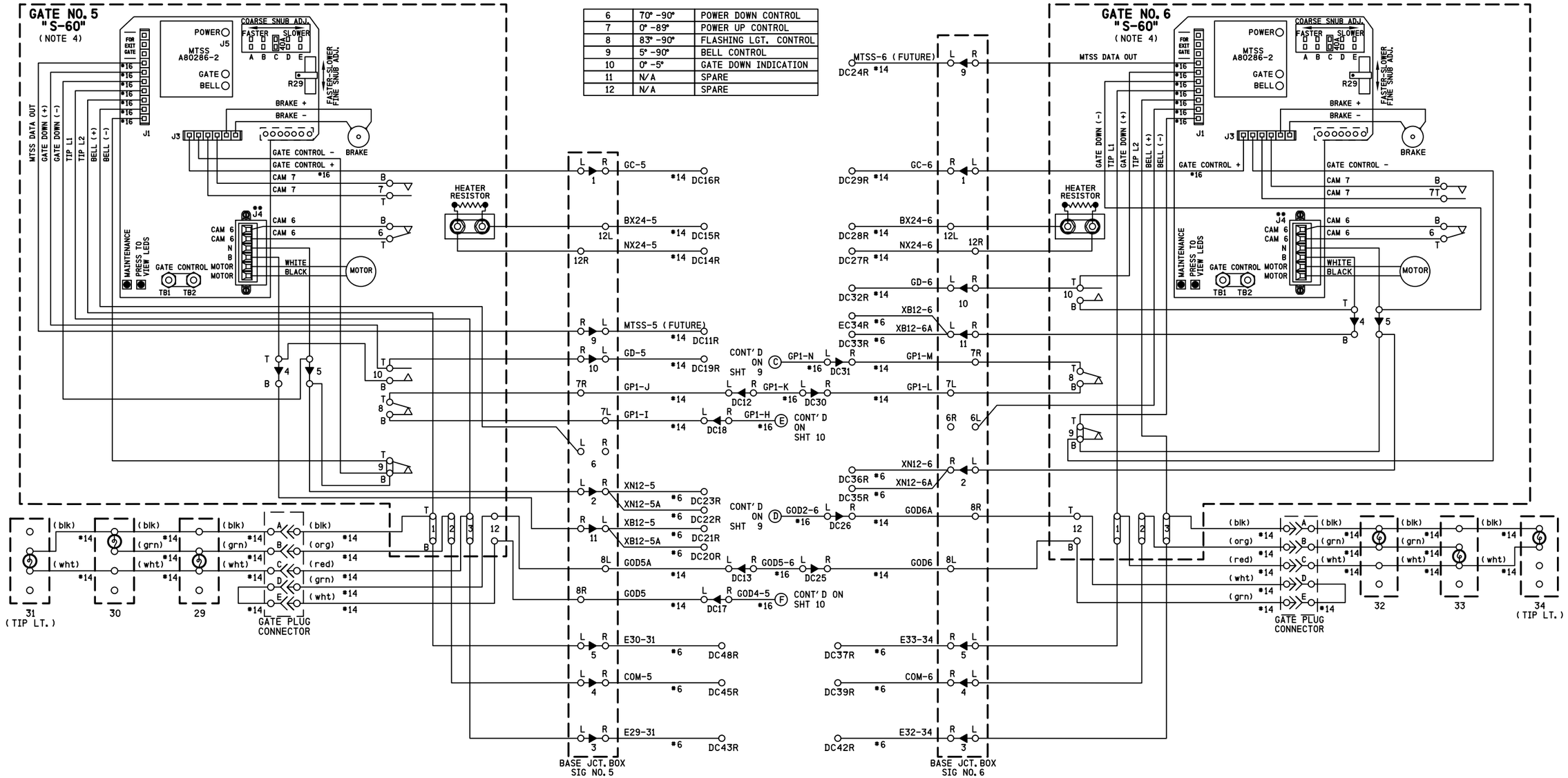

6	70° -90°	POWER DOWN CONTROL
7	0° -89°	POWER UP CONTROL
8	83° -90°	FLASHING LGT. CONTROL
9	5° -90°	BELL CONTROL
10	0° -5°	GATE DOWN INDICATION
11	N/A	SPARE
12	N/A	SPARE

NOTES

1) ON GATE No. 5 ADD JUMPER BETWEEN TERMINALS:
   ADD JUMPER BETWEEN TERMINAL 4T & 10B,
   ADD JUMPER BETWEEN TERMINAL 5B & 9B
2) ON GATE No. 6 ADD JUMPER BETWEEN TERMINALS:
   ADD JUMPER BETWEEN TERMINAL 4T &10B,
   ADD JUMPER BETWEEN TERMINAL 5B & 9B
3) ALL WIRING #10 AWG UNLESS OTHERWISE NOTED
4) GATE DESCENT TIME (RELEASE FROM VERTICAL TO FULLY HORIZONTAL) TO BE WITHIN 11 SECONDS
5) BELL CUT-OUT (5°-90°) WHEN REQUIRED REMOVE STRAP BETWEEN 9B AND 9T
6) ENSURE ALL TERMINALS HAVE TWO SHOULDER NUTS

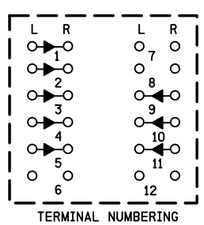

TERMINAL NUMBERING
BASE JCT. BOX 5

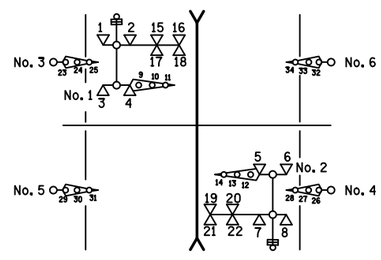

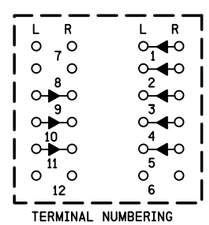

TERMINAL NUMBERING
BASE JCT. BOX 6

IRC 12 JUL 2013

PROPOSED
DESIGN NO. 12-0267
RED-IN YELLOW-OUT

AS INSTALLED
DATE _____
BY _____
(PRINT NAME)

PROPOSED D	PROPOSED M	PROPOSED Y	REVISIONS	D	C	COMPLETED D	COMPLETED M	COMPLETED Y	C

REGION SOUTHERN
SUB. IL RIVER 335

SIGNALS AND COMMUNICATIONS HOMEWOOD
DES. NDH
12 JULY 2013
CH. BJW

GATE 5 & 6 MECH. CONTROL CIRCUITS
SAFETRAN S-60
JOLIET, IL
CATON FARM RD

ILR-014.17-11

DOT# 261 006K

INVENSYS RAIL CORPORATION

DES.: NDH	DATE: 07/12/13	JOB NO.: PICA10406	
CKD.: BJW	ISSUE DATE: N/A	EST. NO.: XP-6840	
DRN.: NDH	PLAN NO.: N/A	SHEET 11 OF 16	
P. TIME: 10:51	P. DATE: 24-OCT-2013	CAD ID.: ILR-014.17-11	

INVENSYS RAIL CORP.
LOUISVILLE DIVISION, LOUISVILLE, KY

ilr-014.17-11.dgn
24-OCT-2013

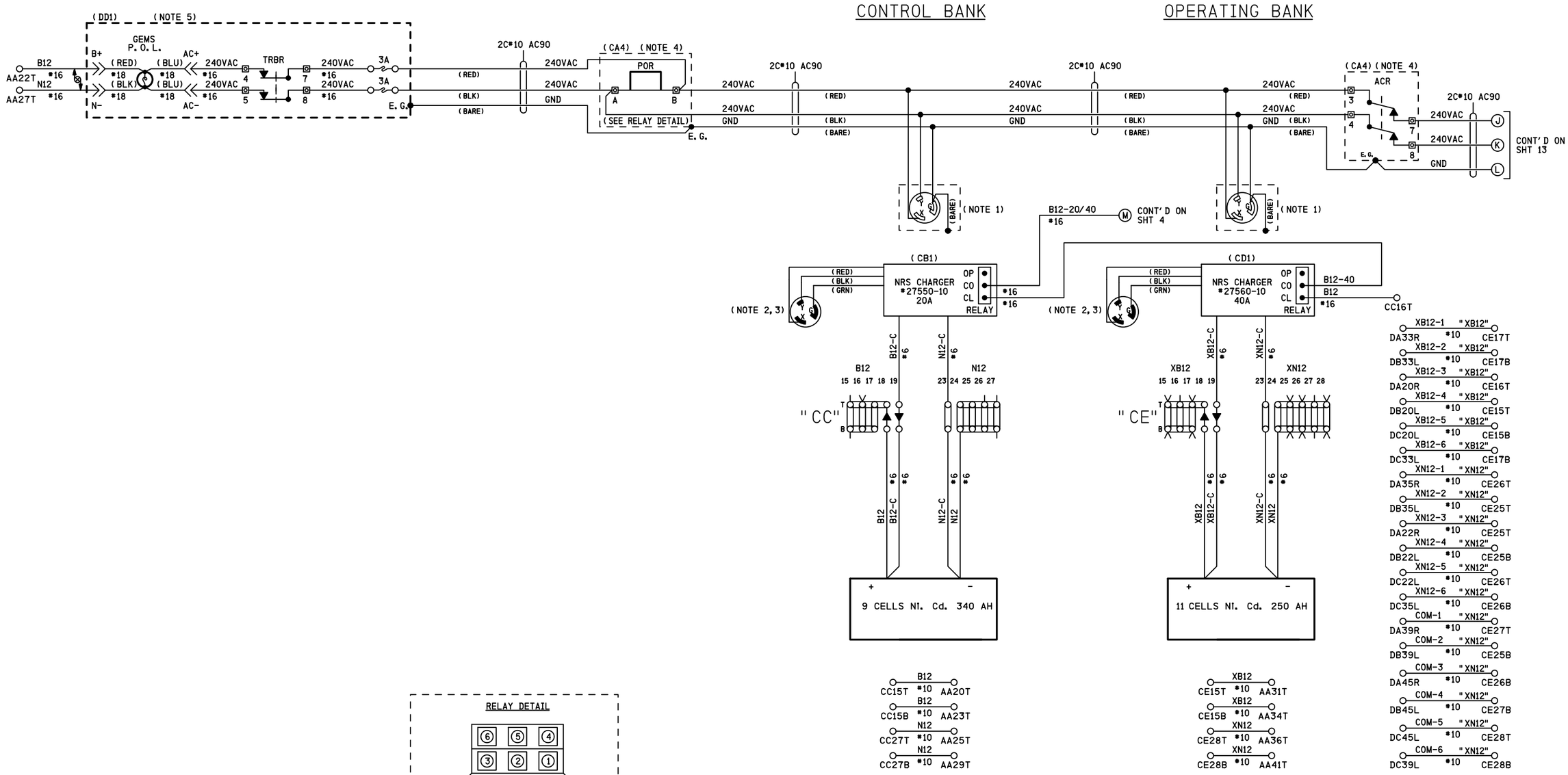

NOTES

1) 30A 250V TWIST LOCK RECEPTACLE HUBBELL HBL 2620
2) PLUG HUBBELL HBL 2621 REFER TO PS-902 PAGE 6
3) GROUND LUG LOCATED ON CHARGER HOUSING
4) PART OF SEARIII POWER CONTROL AND INDICATION RELAY JUNCTION BOX
5) PART OF POWER OFF INDICATOR LIGHT REPEATER RELAY JUNCTION BOX (REFER TO PS-907 SHT 2A)

<< DENOTES WAGO TERMINAL

DENOTES TWISTED PAIR

RELAY DETAIL

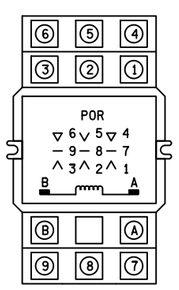

RELAY - POTTER & BRUMFIELD MODEL KUP-14A15-240 SOCKET MOUNTABLE 240 VAC W/ 3 FORM C CONTACTS

SOCKET - SCREW TERMINAL MODEL 27E121

IRC 12 JUL 2013

PROPOSED
DESIGN NO. 12-0267
RED-IN YELLOW-OUT

AS INSTALLED
DATE _____
BY _____
(PRINT NAME)

PROPOSED D	M	Y	REVISIONS	D	C	COMPLETED D	M	Y	C

REGION SOUTHERN
SUB. IL RIVER 335

SIGNALS AND COMMUNICATIONS HOMEWOOD — DES. NDH
12 JULY 2013 — CH. BJW

DC DISTRIBUTION
JOLIET, IL
CATON FARM RD

ILR-014.17-12

DOT# 261 006K

ilr-014.17-12.dgn
24-OCT-2013

NO.	DATE	BY	DESCRIPTION	APP. BY
1				
2				
3				
4				
5				

REVISIONS

INVENSYS RAIL CORPORATION

DES.: NDH	DATE: 07/12/13	JOB NO.: PTCA10406	
CKD.: BJW	ISSUE DATE: N/A	EST. NO.: XP-6840	
DRN.: NDH	PLAN NO.: N/A	SHEET 12 OF 16	
P TIME: 10:51	P DATE: 24-OCT-2013	CAD ID.: ILR-014.17-12	

INVENSYS RAIL CORP.
LOUISVILLE DIVISION, LOUISVILLE, KY

REVISIONS				
NO.	DATE	BY	DESCRIPTION	APP. BY
1				
2				
3				
4				
5				

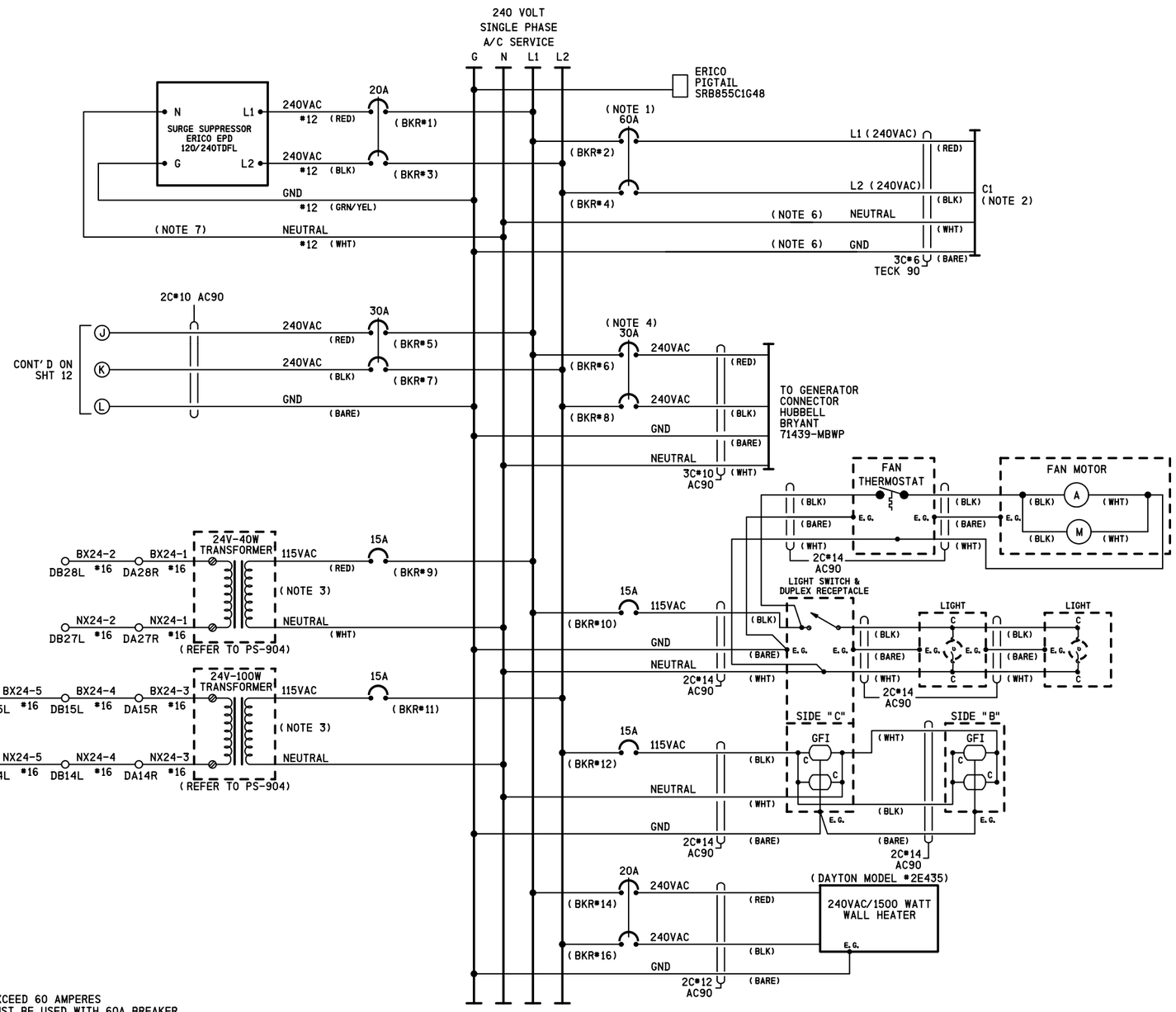

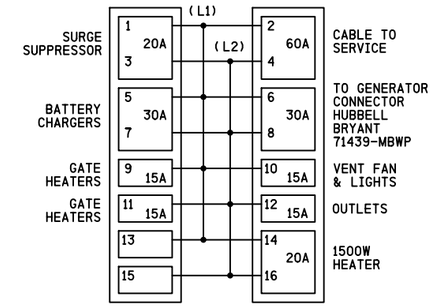

BREAKER POSITIONS

NOTES

1) CIRCUIT BREAKER NOT TO EXCEED 60 AMPERES
RETAINING KIT PK4MB2LA MUST BE USED WITH 60A BREAKER
2) FEEDER CIRCUIT BREAKER, AT STUB POLE SERVICE PANEL, NOT TO EXCEED 60 AMPERES
3) 24 VOLT - 40 WATT TRANSFORMER (CN STOCK #02-45-367)
24 VOLT - 100 WATT TRANSFORMER (CN STOCK #25-49-138)
4) A SWITCH TRANSFER KIT MUST BE INSTALLED BETWEEN THE SERVICE DISCONNECT BREAKER AND THE GENERATOR HOOK UP
5) WHERE SEPARATE GROUND WIRE EXISTS BETWEEN THE SERVICE AND THE LOAD CENTER, REMOVE THE BRASS COLORED BONDING SCREW (REFER TO SCHEMATIC ON BOX COVER FOR EXACT LOCATION)
6) S.C.#6 STRANDED, CSA TYPE R90 (X-LINK)
7) KEEP LEADS AS SHORT AS POSSIBLE

IRC 12 JUL 2013

PROPOSED
DESIGN NO. 12-0267
RED-IN YELLOW-OUT

AS INSTALLED
DATE
BY
(PRINT NAME)

PROPOSED			REVISIONS	D	C	COMPLETED			C
D	M	Y				D	M	Y	

REGION SOUTHERN
SUB. IL RIVER 335

SIGNALS AND COMMUNICATIONS HOMEWOOD
12 JULY 2013
DES. NDH
CH. BJW

AC DISTRIBUTION
JOLIET, IL
CATON FARM RD

ILR-014.17-13

DOT# 261 006K

INVENSYS RAIL CORPORATION

DES.: NDH	DATE: 07/12/13	JOB NO.: PICA10406	
CKD.: BJW	ISSUE DATE: N/A	EST. NO.: XP-6840	
DRN.: NDH	PLAN NO.: N/A	SHEET 13 OF 16	
P TIME: 10:51	P DATE: 24-OCT-2013	CAD ID.: ILR-014.17-13	

INVENSYS RAIL CORP.
LOUISVILLE DIVISION, LOUISVILLE, KY

ilr-014.17-13.dgn
24-OCT-2013

REVISIONS				
NO.	DATE	BY	DESCRIPTION	APP. BY
1				
2				
3				
4				
5				

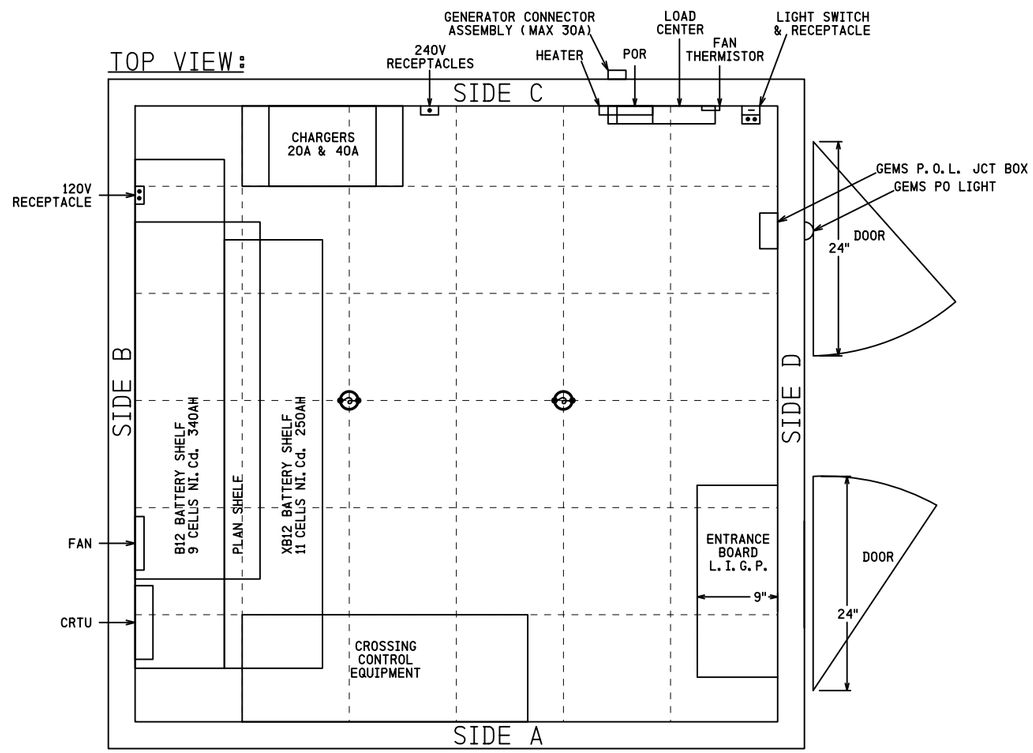

INVENSYS RAIL CORPORATION			
DES.: NDH	DATE: 07/12/13	JOB NO.: PTCA10406	
CKD.: BJW	ISSUE DATE: N/A	EST. NO.: XP-6840	
DRN.: NDH	PLAN NO.: N/A	SHEET 14 OF 16	
P TIME: 10:51	P DATE: 24-OCT-2013	CAD ID.: ILR-014.17-14	

IRC 12 JUL 2013

PROPOSED
DESIGN NO. 12-0267
RED-IN YELLOW-OUT

AS INSTALLED
DATE _____
BY _____
(PRINT NAME)

PROPOSED D	M	Y	REVISIONS	D	C	COMPLETED D	M	Y	C

REGION SOUTHERN
SUB. IL RIVER 335

SIGNALS AND COMMUNICATIONS HOMEWOOD
12 JULY 2013
DES. NDH
CH. BJW

BUNGALOW LAYOUT TOP VIEW
CHASSIS & MODULE LAYOUT
JOLIET, IL
CATON FARM RD

ILR-014.17-14

DOT# 261 006K

INVENSYS RAIL CORP.
LOUISVILLE DIVISION, LOUISVILLE, KY

ilr-014.17-14.dgn
24-OCT-2013

REVISIONS				
NO.	DATE	BY	DESCRIPTION	APP. BY
1				
2				
3				
4				
5				

(DD1)

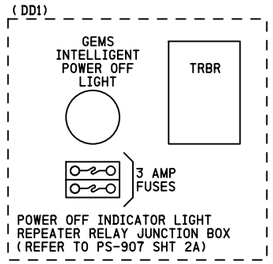

SIDE VIEW: SIDE D

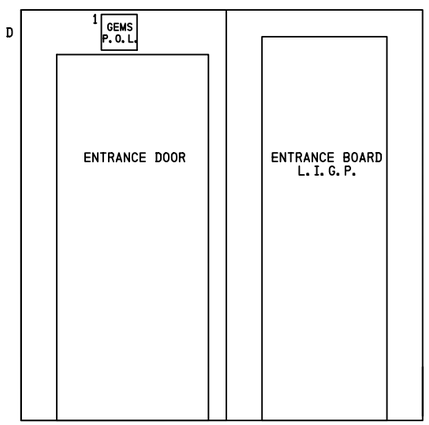

ENTRANCE BOARD L.I.G.P.

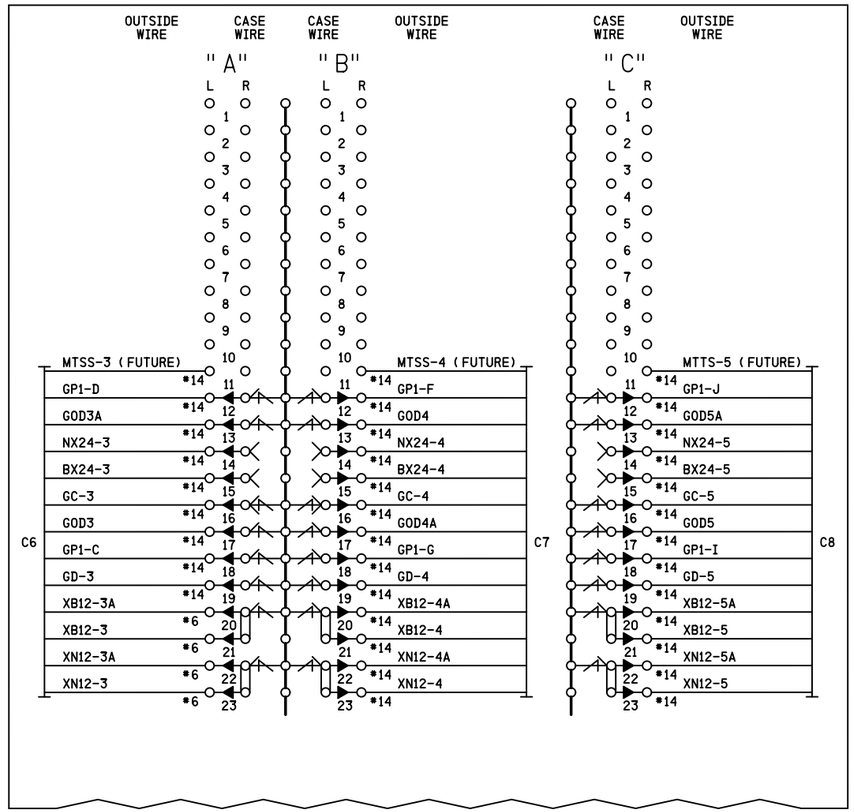

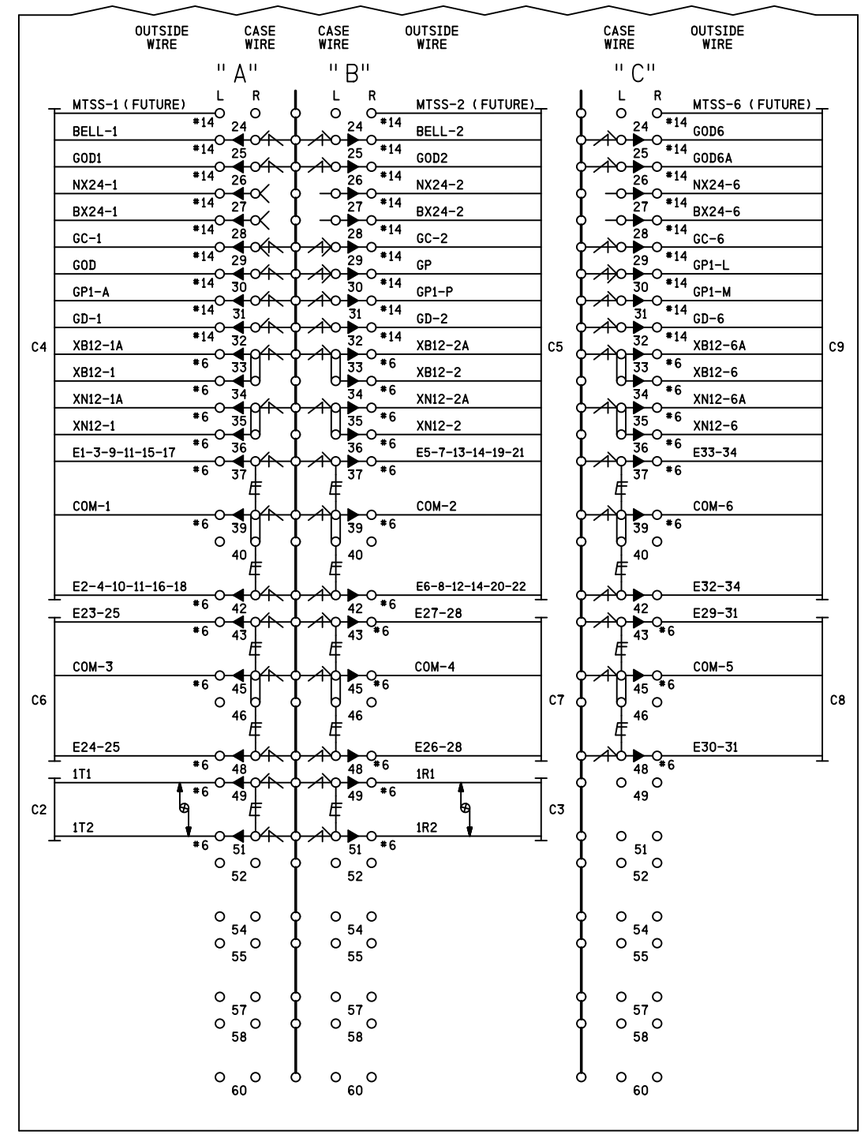

NOTES

- DENOTES EQUALIZER
  REFER TO SCP-1102 FOR EQUALIZER TYPE TO BE USED
- DENOTES LIGHTNING ARRESTOR
  REFER TO SCP-1102 FOR ARRESTOR TYPE TO BE USED
- DENOTES GROUND PLANE
- DENOTES TWISTED PAIR

INVENSYS RAIL CORPORATION			
DES.: NDH	DATE: 07/12/13	JOB NO.: PICA10406	
CKD.: BJW	ISSUE DATE: N/A	EST. NO.: XP-6840	
DRN.: NDH	PLAN NO.: N/A	SHEET 15 OF 16	
P. TIME: 10:52	P. DATE: 24-OCT-2013	CAD ID.: ILR-014.17-15	

IRC 12 JUL 2013

PROPOSED
DESIGN NO. 12-0267
RED-IN YELLOW-OUT

AS INSTALLED
DATE _____
BY _____
(PRINT NAME)

PROPOSED			REVISIONS	D	C	COMPLETED			C
D	M	Y				D	M	Y	

REGION SOUTHERN
SUB. IL RIVER 335

SIGNALS AND COMMUNICATIONS HOMEWOOD
12 JULY 2013
DES. NDH
CH. BJW

BUNGALOW LAYOUT SIDE D
& L.I.G.P.
JOLIET, IL
CATON FARM RD

ILR-014.17-15

DOT# 261 006K

INVENSYS RAIL CORP.
LOUISVILLE DIVISION, LOUISVILLE, KY

ilr-014.17-15.dgn
24-OCT-2013

REVISIONS				
NO.	DATE	BY	DESCRIPTION	APP. BY
1				
2				
3				
4				
5				

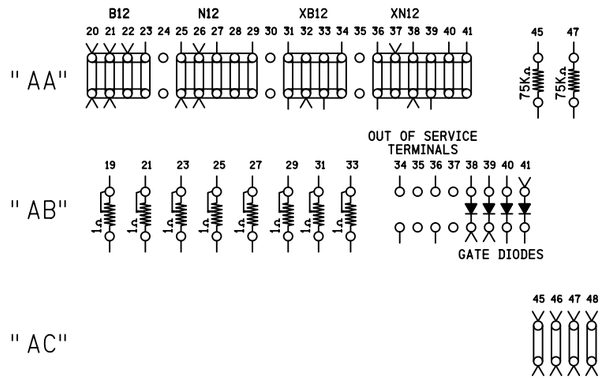

SIDE A

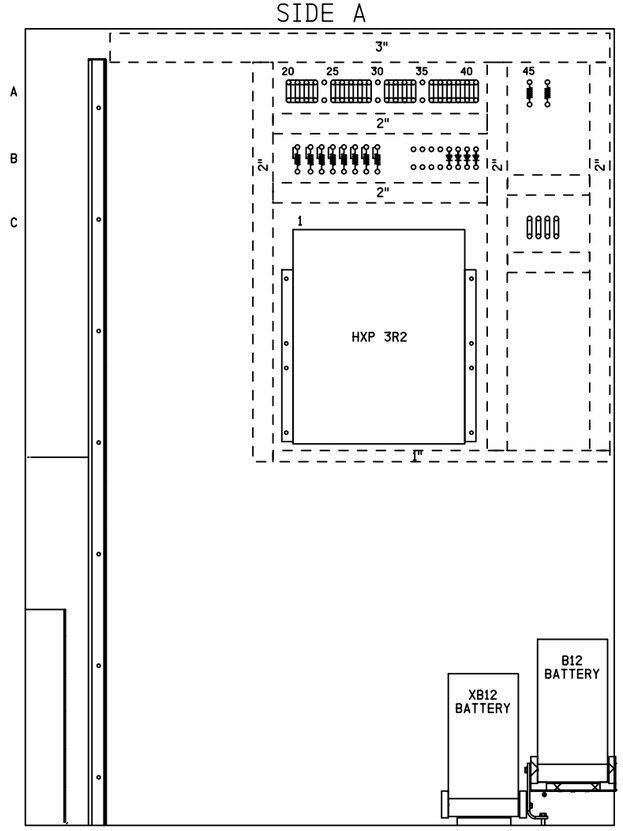

SIDE B

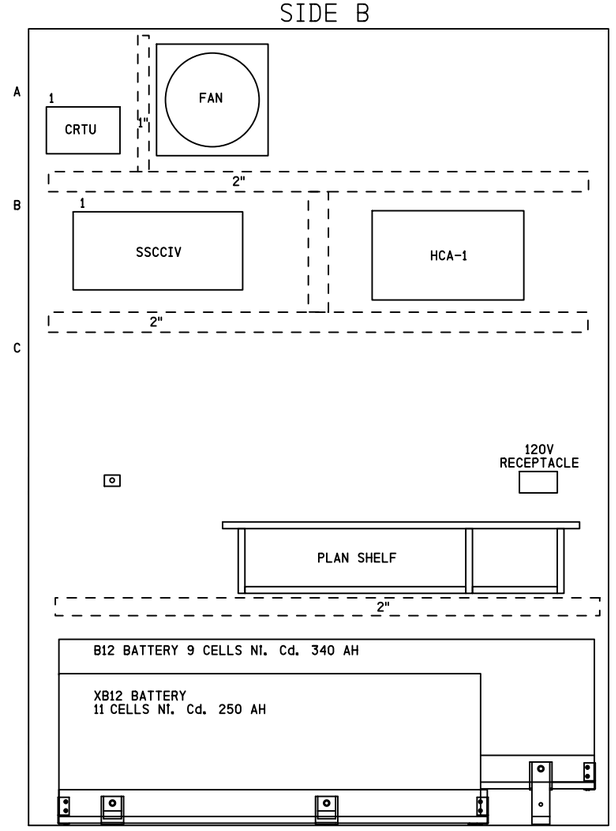

SIDE C

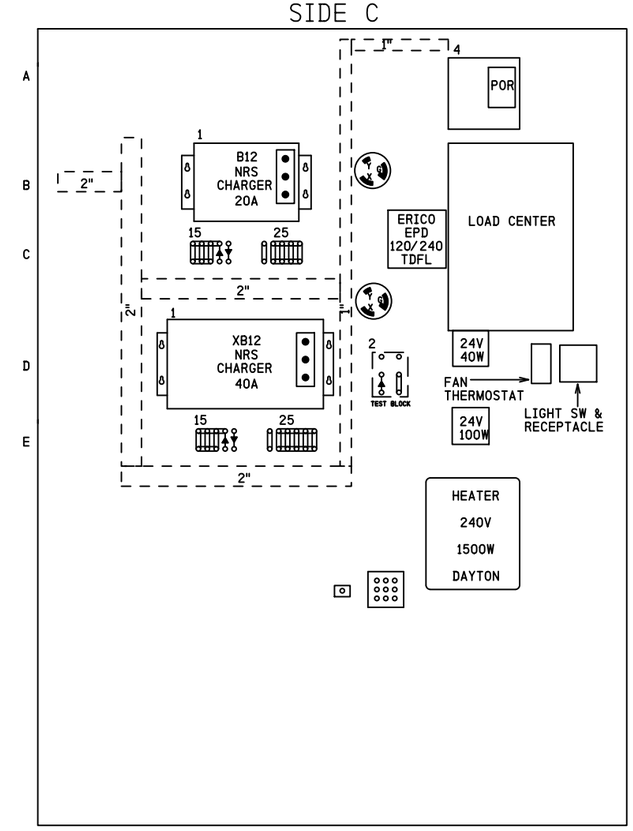

NOTES

1) SURGE PROTECTION SHOULD BE BONDED TO BUNGALOW

REPRESENTS PANDUIT

DENOTES RECTIFIER (SAFETRAN #8008A299006)

IRC 12 JUL 2013

PROPOSED
DESIGN NO. 12-0267
RED-IN YELLOW-OUT

AS INSTALLED
DATE _____
BY _____
(PRINT NAME)

PROPOSED			REVISIONS	D	C	COMPLETED			C
D	M	Y				D	M	Y	

REGION SOUTHERN
SUB. IL RIVER 335

SIGNALS AND COMMUNICATIONS HOMEWOOD — DES. NDH
12 JULY 2013 — CH. BJW

BUNGALOW LAYOUT SIDES A, B & C

JOLIET, IL
CATON FARM RD

ILR-014.17-16

DOT# 261 006K

17

INVENSYS RAIL CORPORATION			
DES.: NDH	DATE: 07/12/13	JOB NO.: PICA10406	
CKD.: BJW	ISSUE DATE: N/A	EST. NO.: XP-6840	
DRN.: NDH	PLAN NO.: N/A	SHEET 16 OF 16	
P TIME: 10:52	P DATE: 24-OCT-2013	CAD ID.: ILR-014.17-16	

INVENSYS RAIL CORP.
LOUISVILLE DIVISION, LOUISVILLE, KY

ilr-014.17-16.dgn
24-OCT-2013