| F.A.P. RTE. | SECTION | COUNTY | TOTAL SHEETS | SHEET NO. |
|---|---|---|---|---|
| 840 | 140 R,TS | KANKAKEE | 104 | 2 |
| STA. | | TO STA. | | |
| FED. ROAD DIST. NO. | ILLINOIS | FED. AID PROJECT | | |

PCC DRIVEWAY PAVEMENT
SEE SCHEDULE OF QUANTITIES

BITUMINOUS CONCRETE PAVEMENT (FULL DEPTH), TYPE 1, 12 1/2"

NOTE:
OFFSETS SHOWN ARE TO EDGE OF PAVEMENT OR TO FLARED END OF END SECTIONS. WHERE STRUCTURE IS NOT IN CURB AND GUTTER OFFSET IS TO CENTER OF STRUCTURE.
RIM ELEVATIONS ARE AT FLOWLINE OF GUTTER OR TOP OF GRATE/LID.

* FLAT SLAB TOP REQUIRED

PRCFES – PRECAST REINFORCED CONCRETE FLARED END SECTION
I-A – INLET TYPE A
I-B – INLET TYPE B
P.E. – PRIVATE ENTRANCE
C.E. – COMMERCIAL ENTRANCE
F.E. – FIELD ENTRANCE
MH TA 4' – MANHOLE TYPE A 4' DIAMETER

SEE SHEET 38 FOR INTERSECTION DETAILS

| STRUCTURE NO. | 172 | 173 | 174 | 175 | 176 | 177 |
|---|---|---|---|---|---|---|
| STA | 114+50 | 114+50 | 115+75 | 115+75 | 116+00 | 116+00 |
| OFFSET | 26' LT. | 44.4' LT. | 25.83' LT. | 44.1' LT. | 12' RT. | 29.6' RT. |
| STRUCTURE TYPE | I-A | PRCFES 12" | I-A | PRCFES 12" | I-A | PRCFES 12" |
| F&G TYPE | 3V | -- | 3V | -- | 3V | -- |
| RIM ELEVATION | 686.01 | -- | 685.02 | -- | 685.08 | -- |
| EAST INVERT | -- | -- | -- | -- | -- | -- |
| WEST INVERT | -- | -- | -- | -- | -- | -- |
| NORTH INVERT | 684.05 | 683.13 | 683.06 | 682.13 | -- | -- |
| SOUTH INVERT | -- | -- | -- | -- | 683.12 | 682.40 |
| PIPE NUMBER | 90 | | 91 | | 92 | |
| SIZE | 12" | | 12" | | 12" | |
| LENGTH | 11 | | 11 | | 10 | |
| CLASS | A | | A | | A | |
| TYPE | 1 | | 1 | | 1 | |
| % SLOPE | 5.5 | | 5.6 | | 4.5 | |
| TRENCH BACKFILL | -- | | -- | | -- | |

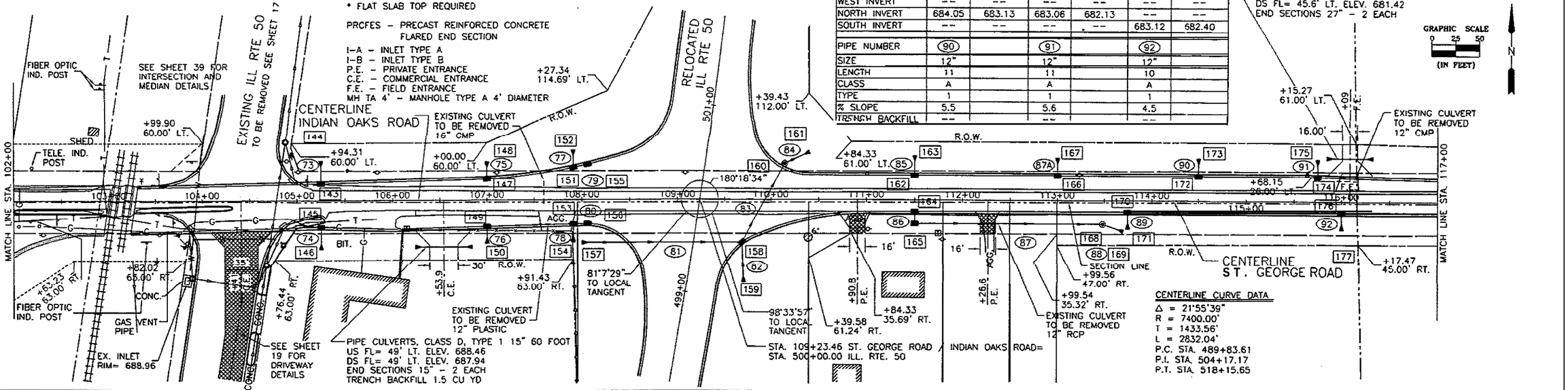


CENTERLINE CURVE DATA
Δ = 21°55'39"
R = 7400.00'
T = 1433.56'
L = 2832.04'
P.C. STA. 489+83.61
P.I. STA. 504+17.17
P.T. STA. 518+15.65

| STRUCTURE NO. | 143 | 144 | 145 | 146 | 147 | 148 | 149 | 150 | 151 | 152 | 153 | 154 | 155 | 156 | 157 | 158 | 159 | 160 | 161 | 162 | 163 | 164 | 165 | 166 | 167 | 168 | 169 | 170 | 171 |
|---|---|---|---|---|---|---|---|---|---|---|---|---|---|---|---|---|---|---|---|---|---|---|---|---|---|---|---|---|---|
| STA | 105+25 | 105+25 | 105+25 | 105+25 | 107+00 | 107+00 | 107+00 | 107+00 | 107+91 | 107+91 | 107+91 | 107+91 | 108+06 | 108+06 | 108+00 | 109+69.03 | 109+70.53 | 110+14.27 | 110+40 | 111+50 | 111+50 | 111+50 | 111+50 | 113+00 | 113+00 | 113+48 | 113+70 | 113+75 | 113+75 |
| OFFSET | 17.8' LT. | 41.6' LT. | 28.37' RT. | 51.2' RT. | 22.33' LT. | 40.2' LT. | 27.89' RT. | 45.3' RT. | 33.96' LT. | 52.2' LT. | 25.64' RT. | 44.5' RT. | 37.26' LT. | 25.32' RT. | 54.2' RT. | 45.04' RT. | 87.46' RT. | 37.98' LT. | 50' LT. | 26' LT. | 46.5' LT. | 12' RT. | 25' RT. | 26' LT. | 44.4' LT. | 25' RT. | 32.5' RT. | 12' RT. | 29.6' RT. |
| STRUCTURE TYPE | I-A | PRCFES 12" | I-A | PRCFES 12" | I-A | PRCFES 12" | I-A | PRCFES 12" | I-B* | PRCFES 12" | I-B* | PRCFES 12" | I-A | I-A | PRCFES 18" | MH TA 5' | PRCFES 30" | MH TA 5' | PRCFES 30" | I-A | PRCFES 12" | I-A | I-B* | I-A | PRCFES 12" | I-A | PRCFES 12" | I-A | PRCFES 12" |
| F&G TYPE | 3V | -- | 3V | -- | 3V | -- | 3V | -- | 3 | -- | 3 | -- | 3 | 3 | -- | 3 | -- | 1(C) | -- | 3V | -- | 3V | 8 | 3V | -- | 8 | -- | 3V | -- |
| RIM ELEVATION | 694.00 | -- | 693.78 | -- | 691.07 | -- | 690.95 | -- | 690.38 | -- | 690.54 | -- | 690.46 | 690.56 | -- | 689.87 | -- | 690.05 | -- | 688.41 | -- | 688.68 | 687.50 | 687.21 | -- | 686.36 | -- | 686.88 | -- |
| EAST INVERT | -- | -- | -- | -- | -- | -- | -- | -- | 687.92 | -- | 688.08 | -- | -- | -- | -- | -- | -- | 685.56 | 685.48 | -- | -- | -- | 685.67 | -- | -- | 684.38 | -- | -- | -- |
| WEST INVERT | -- | -- | -- | -- | -- | -- | -- | -- | -- | -- | -- | -- | 688.50 | 688.66 | 687.46 | 685.82 | -- | -- | -- | -- | -- | -- | 685.67 | -- | -- | 684.38 | 684.24 | -- | -- |
| NORTH INVERT | 692.04 | 689.77 | -- | -- | 689.11 | 688.30 | -- | -- | 687.92 | 687.54 | -- | -- | -- | -- | -- | 685.82 | -- | -- | -- | 686.45 | 684.99 | -- | -- | 685.25 | 684.33 | -- | -- | -- | -- |
| SOUTH INVERT | -- | -- | 691.82 | 689.77 | -- | -- | 688.99 | 688.30 | -- | -- | 688.08 | 687.54 | -- | -- | -- | 685.82 | 685.94 | 685.56 | -- | -- | -- | 686.72 | -- | -- | -- | -- | -- | 684.92 | 684.20 |
| PIPE NUMBER | 73 | | 74 | | 75 | | 76 | | 77 | | 78 | | 79 | 80 | 81 | | 82 | 83 | 84 | 85 | | 86 | 87 | 87A | | 88 | | 89 | |
| SIZE | 12" | | 12" | | 12" | | 12" | | 12" | | 12" | | 12" | 12" | 18" | | 30" | 30" | 30" | 12" | | 12" | 12" | 12" | | 12" | | 12" | |
| LENGTH | 16 | | 15 | | 10 | | 10 | | 11 | | 11 | | 14 | 14 | 162 | | 34 | 92 | 20 | 13 | | 10 | 196 | 11 | | 19 | | 10 | |
| CLASS | A | | A | | A | | A | | A | | A | | A | A | A | | A | A | A | A | | A | A | A | | A | | A | |
| TYPE | 1 | | 1 | | 1 | | 1 | | 1 | | 1 | | 1 | 1 | 1 | | 1 | 1 | 1 | 1 | | 1 | 1 | 1 | | 1 | | 1 | |
| % SLOPE | 10.3 | | 9.7 | | 5.0 | | 4.4 | | 2.3 | | 3.1 | | 4.1 | 4.1 | 1.0 | | 2.8 | 2.8 | 2.8 | 7.8 | | 10.5 | 0.66 | 5.5 | | 0.55 | | 4.5 | |
| TRENCH BACKFILL | -- | | -- | | -- | | -- | | -- | | -- | | -- | -- | 32.0 | | -- | 11.8 | -- | -- | | -- | 4.3 | -- | | -- | | -- | |

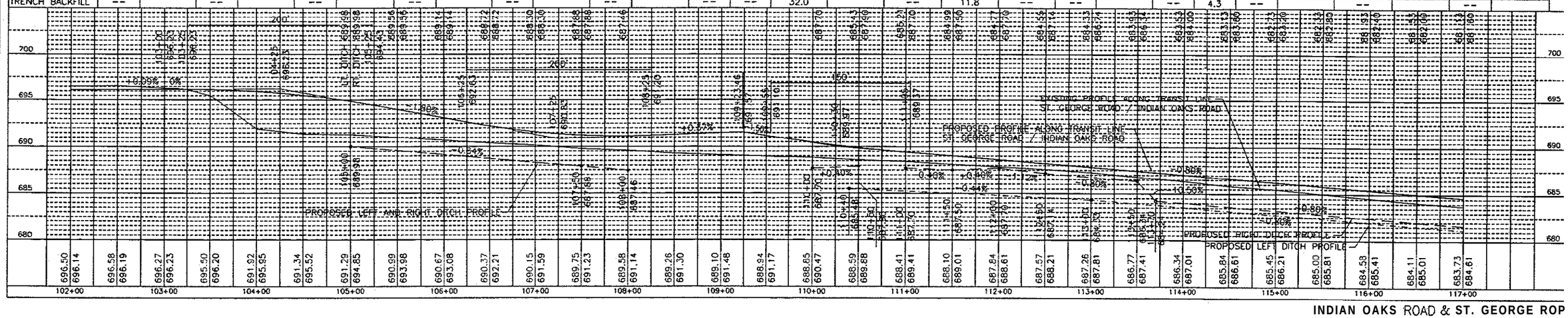


INDIAN OAKS ROAD & ST. GEORGE ROP

EXHIBIT A-2, P.1

| ROUTE NO. | SECTION | COUNTY | TOTAL SHEETS | SHEET NO. |
|---|---|---|---|---|
| FAP 840 | * | KANKAKEE | 104 | 36 |

* 140 R,TS

GRAPHIC SCALE 0 25 50 (IN FEET)

N

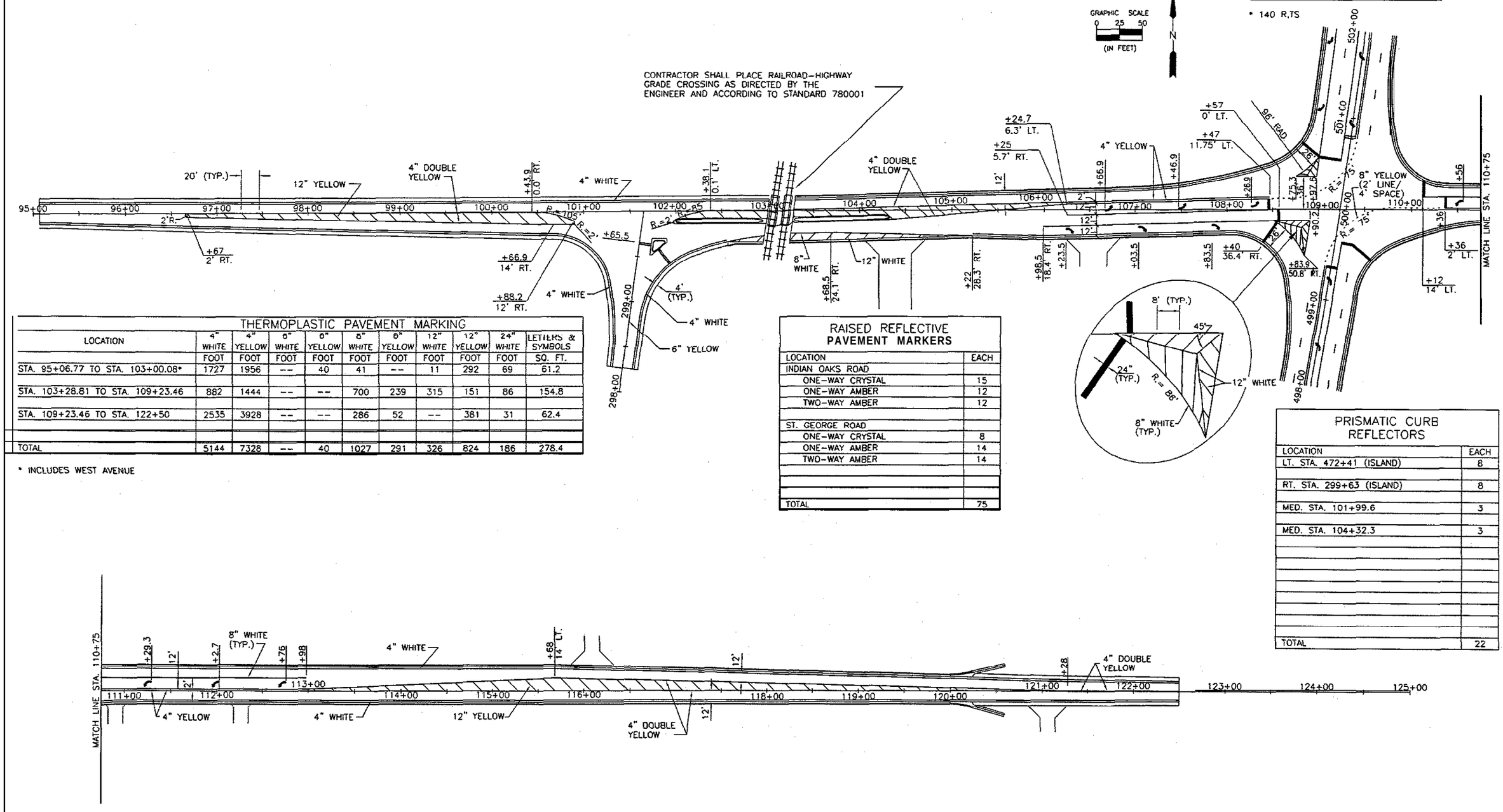


## THERMOPLASTIC PAVEMENT MARKING

| LOCATION | 4" WHITE | 4" YELLOW | 6" WHITE | 6" YELLOW | 8" WHITE | 8" YELLOW | 12" WHITE | 12" YELLOW | 24" WHITE | LETTERS & SYMBOLS |
|---|---|---|---|---|---|---|---|---|---|---|
| | FOOT | FOOT | FOOT | FOOT | FOOT | FOOT | FOOT | FOOT | FOOT | SQ. FT. |
| STA. 95+06.77 TO STA. 103+00.08* | 1727 | 1956 | -- | 40 | 41 | -- | 11 | 292 | 69 | 61.2 |
| STA. 103+28.81 TO STA. 109+23.46 | 882 | 1444 | -- | -- | 700 | 239 | 315 | 151 | 86 | 154.8 |
| STA. 109+23.46 TO STA. 122+50 | 2535 | 3928 | -- | -- | 286 | 52 | -- | 381 | 31 | 62.4 |
| TOTAL | 5144 | 7328 | -- | 40 | 1027 | 291 | 326 | 824 | 186 | 278.4 |

* INCLUDES WEST AVENUE

## RAISED REFLECTIVE PAVEMENT MARKERS

| LOCATION | EACH |
|---|---|
| INDIAN OAKS ROAD | |
| ONE-WAY CRYSTAL | 15 |
| ONE-WAY AMBER | 12 |
| TWO-WAY AMBER | 12 |
| ST. GEORGE ROAD | |
| ONE-WAY CRYSTAL | 8 |
| ONE-WAY AMBER | 14 |
| TWO-WAY AMBER | 14 |
| TOTAL | 75 |

## PRISMATIC CURB REFLECTORS

| LOCATION | EACH |
|---|---|
| LT. STA. 472+41 (ISLAND) | 8 |
| RT. STA. 299+63 (ISLAND) | 8 |
| MED. STA. 101+99.6 | 3 |
| MED. STA. 104+32.3 | 3 |
| TOTAL | 22 |

**PAVEMENT MARKING PLAN**
**INDIAN OAKS ROAD / ST. GEORGE ROAD**
**F.A.P. ROUTE 840 – SECTION 140 R,TS**
**KANKAKEE COUNTY**

EXHIBIT A-2, P. 2

| ROUTE NO. | SECTION | COUNTY | TOTAL SHEETS | SHEET NO. |
|---|---|---|---|---|
| FAP 840 | * | KANKAKEE | 104 | 7 |
| FED. ROAD DIST. NO. 7 | | ILLINOIS | FED. AID PROJECT- | |

* 140 R,TS

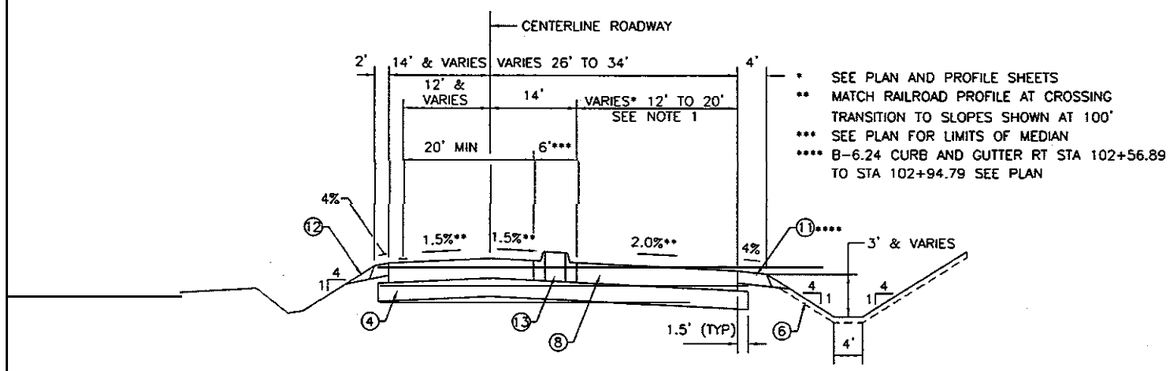


* SEE PLAN AND PROFILE SHEETS
** MATCH RAILROAD PROFILE AT CROSSING TRANSITION TO SLOPES SHOWN AT 100'
*** SEE PLAN FOR LIMITS OF MEDIAN
**** B-6.24 CURB AND GUTTER RT STA 102+56.89 TO STA 102+94.79 SEE PLAN

STA. 100+50 TO STA. 103+00.08

NOTE 1: 20' MIN AT RAISED MEDIAN

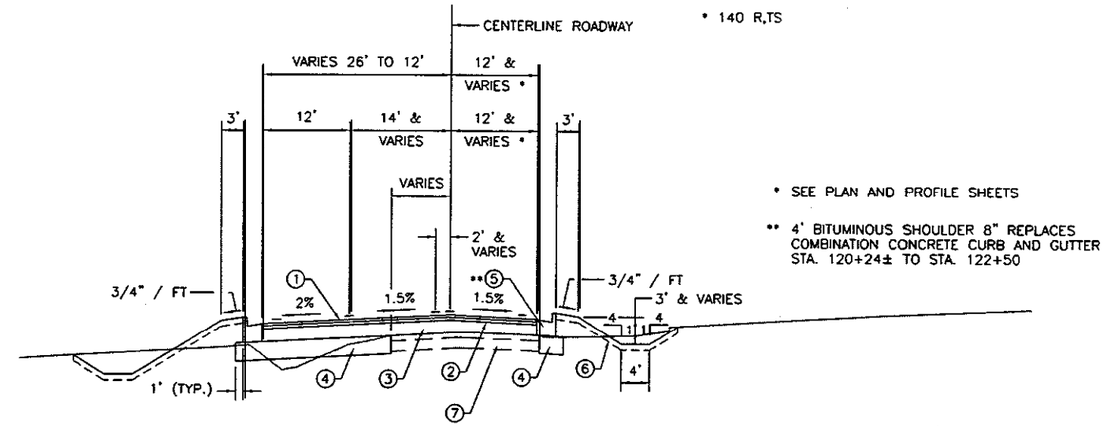


* SEE PLAN AND PROFILE SHEETS
** 4' BITUMINOUS SHOULDER 8" REPLACES COMBINATION CONCRETE CURB AND GUTTER STA. 120+24± TO STA. 122+50

STA. 110+50 TO STA. 122+50

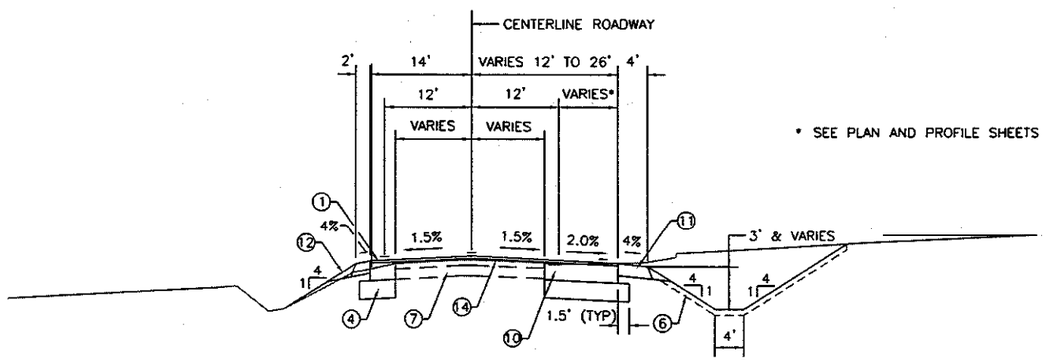


* SEE PLAN AND PROFILE SHEETS

STA. 95+06.77 TO STA. 100+50

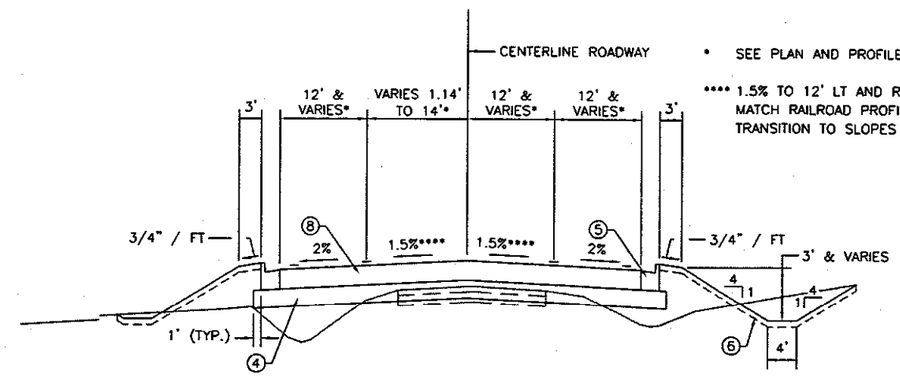


* SEE PLAN AND PROFILE SHEETS
**** 1.5% TO 12' LT AND RT THEN 2.0% MATCH RAILROAD PROFILE AT CROSSING TRANSITION TO SLOPES SHOWN IN 100'

STA. 103+28.81 TO STA. 110+50

RAISED MEDIAN STA 103+30.29 TO STA 104+30.26 NOT SHOWN FOR CLARITY. SEE PLAN AND PROFILE SHEETS FOR LOCATION. 20' MIN PAVEMENT BETWEEN MEDIAN AND OUTSIDE CURB AND GUTTER EACH SIDE OF MEDIAN

1. POLYMERIZED SURFACE COURSE, MIX. D, N70, 1 1/2"
2. POLYMERIZED SUPERPAVE BINDER, IL 19.0, N70, 1 3/4" & VARIES
3. LEVELING BINDER (MACHINE METHOD) SUPERPAVE, N70
4. AGGREGATE BASE COURSE, TYPE A 12"
5. COMBINATION CONCRETE CURB AND GUTTER TYPE B-6.24
6. VEGETATIVE SUSTAINING SOIL 4" MIN. (SEE SPECIAL PROVISIONS)
7. EXISTING PAVEMENT
8. BITUMINOUS CONCRETE PAVEMENT (FULL-DEPTH), TYPE 1, 12 1/2"
9. NOT USED
10. BITUMINOUS BASE COURSE 11" RT. STA. 96+60.68 TO STA. 100+50
    BITUMINOUS CONCRETE BASE COURSE WIDENING
    LT. STA. 95+06.77 TO STA. 100+50
    RT. STA. 95+06.77 TO STA. 96+60.68
11. BITUMINOUS SHOULDER 8"
12. AGGREGATE SHOULDER TYPE B
13. RAISED MEDIAN SB-6.12
14. BITUMINOUS SURFACE REMOVAL 1 1/2"

**TYPICAL SECTIONS**
**INDIAN OAKS ROAD & ST. GEORGE ROAD**
**F.A.P. ROUTE 840 – SECTION 140 R,TS**
**KANKAKEE COUNTY**

EXHIBIT A-2, P.3

| ROUTE NO. | SECTION | COUNTY | TOTAL SHEETS | SHEET NO. |
|---|---|---|---|---|
| FAP 840 | * | KANKAKEE | 104 | 39 |
| FED. ROAD DIST. NO. 9 | | ILLINOIS | FED. AID PROJECT- | |

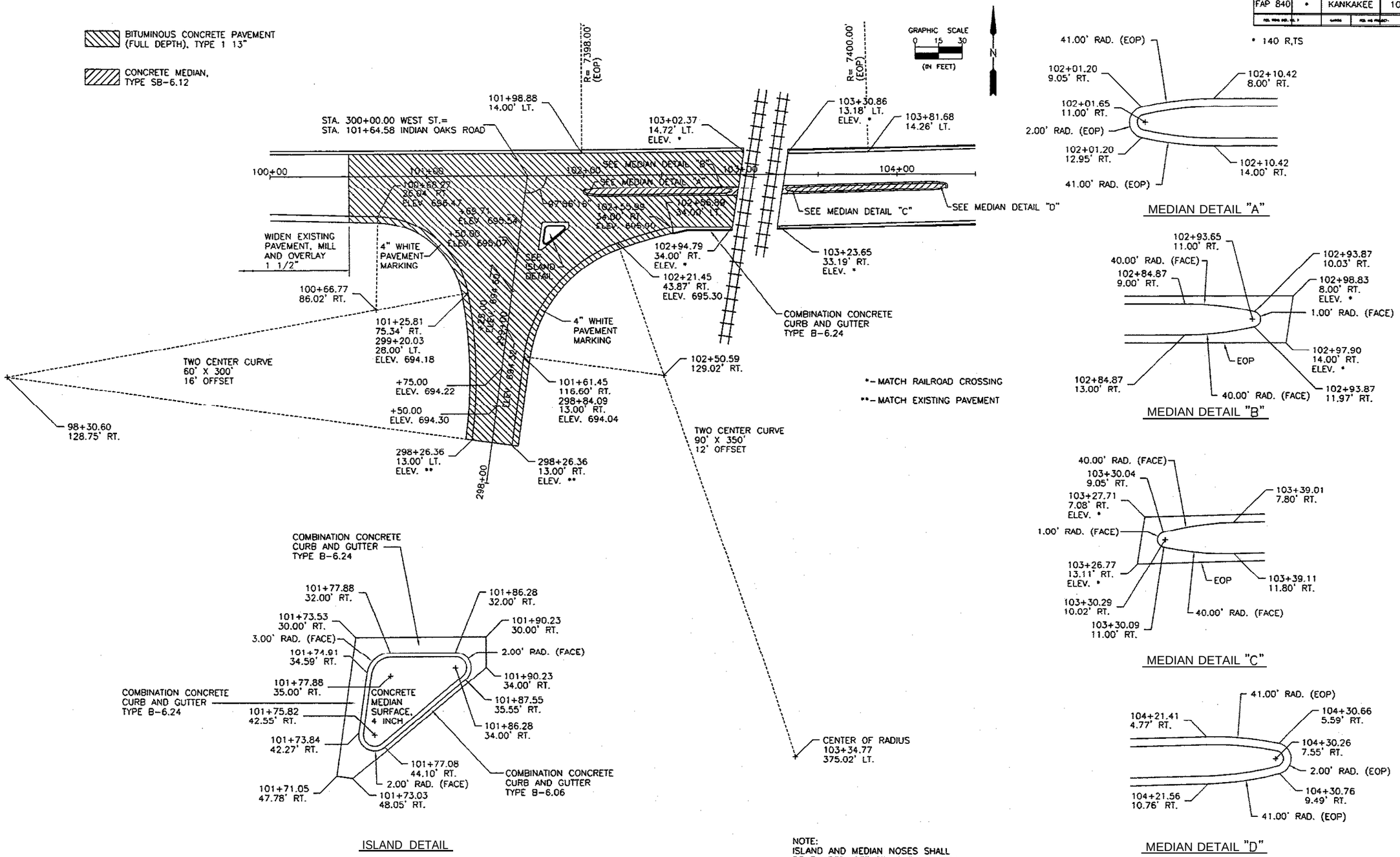


NOTE:
ISLAND AND MEDIAN NOSES SHALL BE RAMPED, SEE STANDARD 606301. PROVIDE 12"X12" BLOCK OUTS IN MEDIAN SURFACES AS DIRECTED BY THE ENGINEER (FOR SIGN PLACEMENT).

INTERSECTION DETAIL
WEST STREET
F.A.P. ROUTE 840 - SECTION 140 R,TS
KANKAKEE COUNTY

EXHIBIT A-2, P. 4