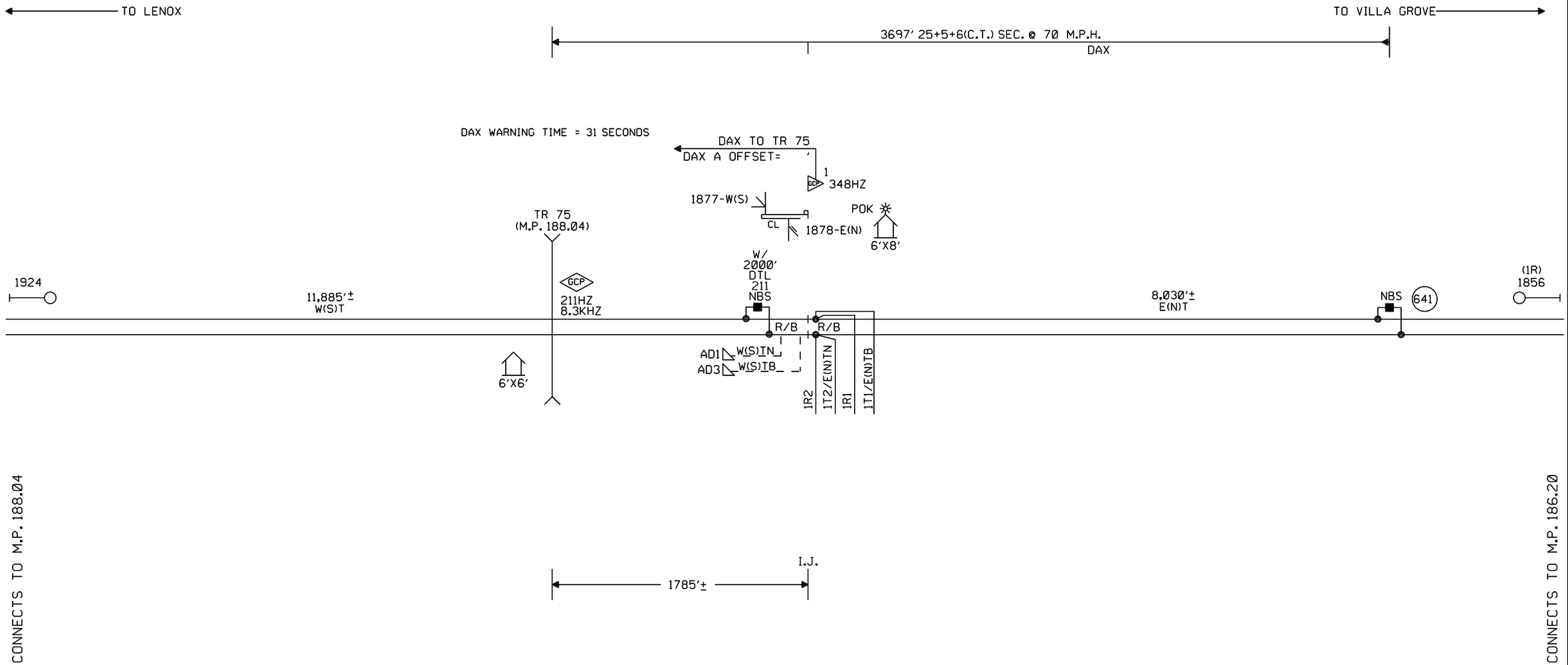


NOTES:

⊘ = OBSERVE CORRECT POLARITY. EQUIPMENT WILL BE DAMAGED IF CONNECTIONS ARE REVERSED

⊗ = TWISTED WIRES
ALL TRACK WIRES 2C. #6
INSULATED 1 TWIST PER FT.

TRANSMITTER AND RECEIVER LEADS TO BE SEPARATED BY AT LEAST 12" IN TRENCH, LENGTHS SHOULD NOT EXCEED MANUFACTURES RECOMMENDATION.

ALL BUNGALOW WIRING TO BE #16 AWG FLEX UNLESS OTHERWISE SPECIFIED EXCEPT ALL GROUND WIRE TO BE #6 AWG FLEX OR LARGER.

REFER TO UP STANDARD DWG. FOR BUNGALOW GROUNDING.

ENSURE TRACK POLARITY IS TRANSPOSED ACROSS ALL INSULATED JOINTS.

PORTABLE GENERATOR EXTENSION CORD FOR 240V TO 240V IS PROVIDED AS WELL AS A 120V TO 240V ADAPTER.

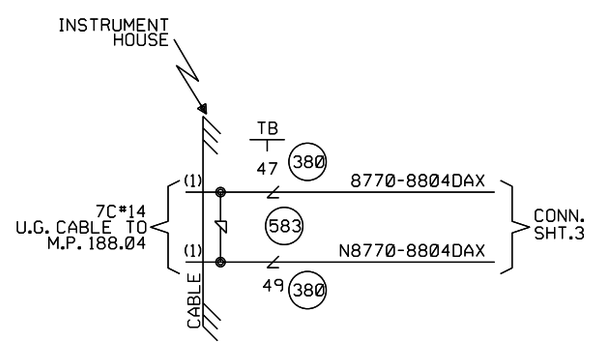


CONSTRUCTION NOTES

1. REUSE EXISTING SIGNAL MAST AND SIGNALS AT THIS LOCATION.
2. NEW 6'X8' HOUSE FOR EC2 INTERMEDIATE AND GCP4000 REMOTE AT THIS LOCATION. FIELD TO REUSE EXISTING EC2 EQUIPMENT.
3. ORDER AND INSTALL (2) 132# INSULATED JOINTS AT THIS LOCATION TO REPLACE EXISTING JOINTS.
4. ORDER AND INSTALL (2) LIGHT-OUT RELAYS (TAB 894), (6) RELAYS (TAB 884), (1) FR-2 (TAB 615), AND (1) 211HZ TRACK FILTER (TAB 729) AT THIS LOCATION.

W(S) ←—○—→ E(N)

CABLE TABULATION

CABLE #1 7C#14 U.G.B.T. HOUSE TO MP. 188.04

NEW SHEET

| | | | | | | | | | | |
|---|---|---|---|---|---|---|---|---|---|---|
| | | | | | Designed: 03/04/13<br>INSTALL FLASHERS W/GATES & CWT. TR 75 M.P. 188.04<br>Rec#: WO#: 18265<br>IS: /MRN / /XRL/JTB | MODIFICATION LEVEL<br>Q. A. LAST LEVEL CHECKED DU<br>LAST LEVEL MOD THIS TYPICAL DU<br>LAST LEVEL BY DESIGNER DU<br>CHANGED FROM TYPICAL? Y<br>REV 01.24.11 4K REMOTE.1 | CIRCUIT MODIFICATIONS ARE NOT TO BE MADE WITHOUT AUTHORITY FROM THE OFFICE OF SIGNAL DESIGN | Date: 03/04/13<br>Des: XRL<br>Chk: MRN<br>AFE: 18265 | UNION PACIFIC RAILROAD<br>WESTERVELT, ILLINOIS<br>REMOTE LOCATION<br>PANA SUBDIVISION<br>Office of Sr AVP Engineering - Signal/TCO Omaha, Nebraska | Sh.: 1<br>DOT 000000R<br>MP: 187.70<br>ID: 030218770.1X |

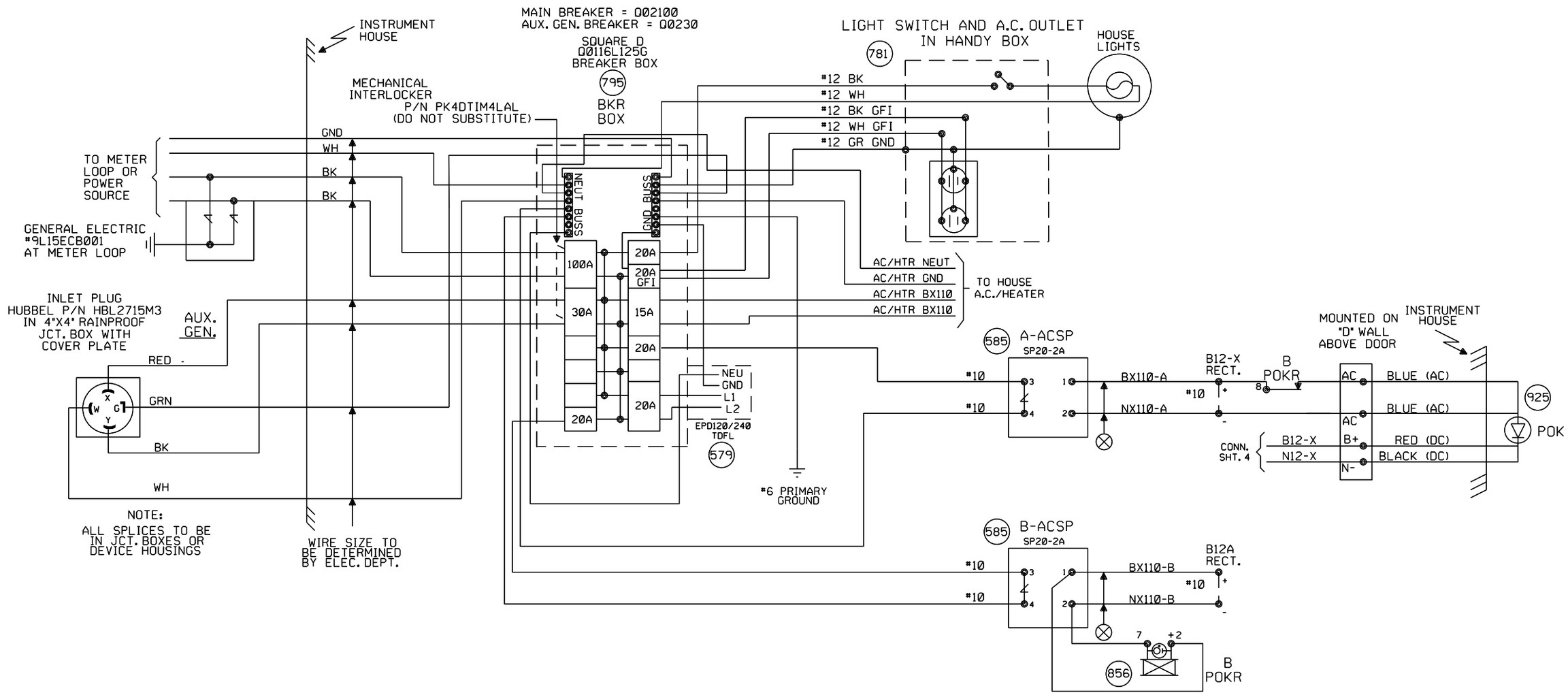


NEW SHEET

| | | | | | | | | | | | |
|---|---|---|---|---|---|---|---|---|---|---|---|
| | | | | | Designed: 03/04/13<br>INSTALL FLASHERS W/GATES & CWT. TR 75 M.P. 188.04<br>Rec#: WO#: 18265<br>IS: /MRN<br>/ /XRL/JTB | MODIFICATION LEVEL<br>Q.A. LAST LEVEL CHECKED DU<br>LAST LEVEL MOD THIS TYPICAL DU<br>LAST LEVEL BY DESIGNER DU<br>CHANGED FROM TYPICAL? Y<br>REV 01.24.11 4K SEARAC.2 | CIRCUIT MODIFICATIONS ARE NOT TO BE MADE WITHOUT AUTHORITY FROM THE OFFICE OF SIGNAL DESIGN | Date: 03/04/13<br>Des: XRL<br>Chk: MRN<br>AFE: 18265 | UNION PACIFIC RAILROAD<br>WESTERVELT, ILLINOIS<br>REMOTE LOCATION<br>PANA SUBDIVISION<br>Office of Sr AVP Engineering - Signal/TCO Omaha, Nebraska | Sh.: 2<br>DOT 000000R<br>MP: 187.70<br>ID: 030218770.2X |

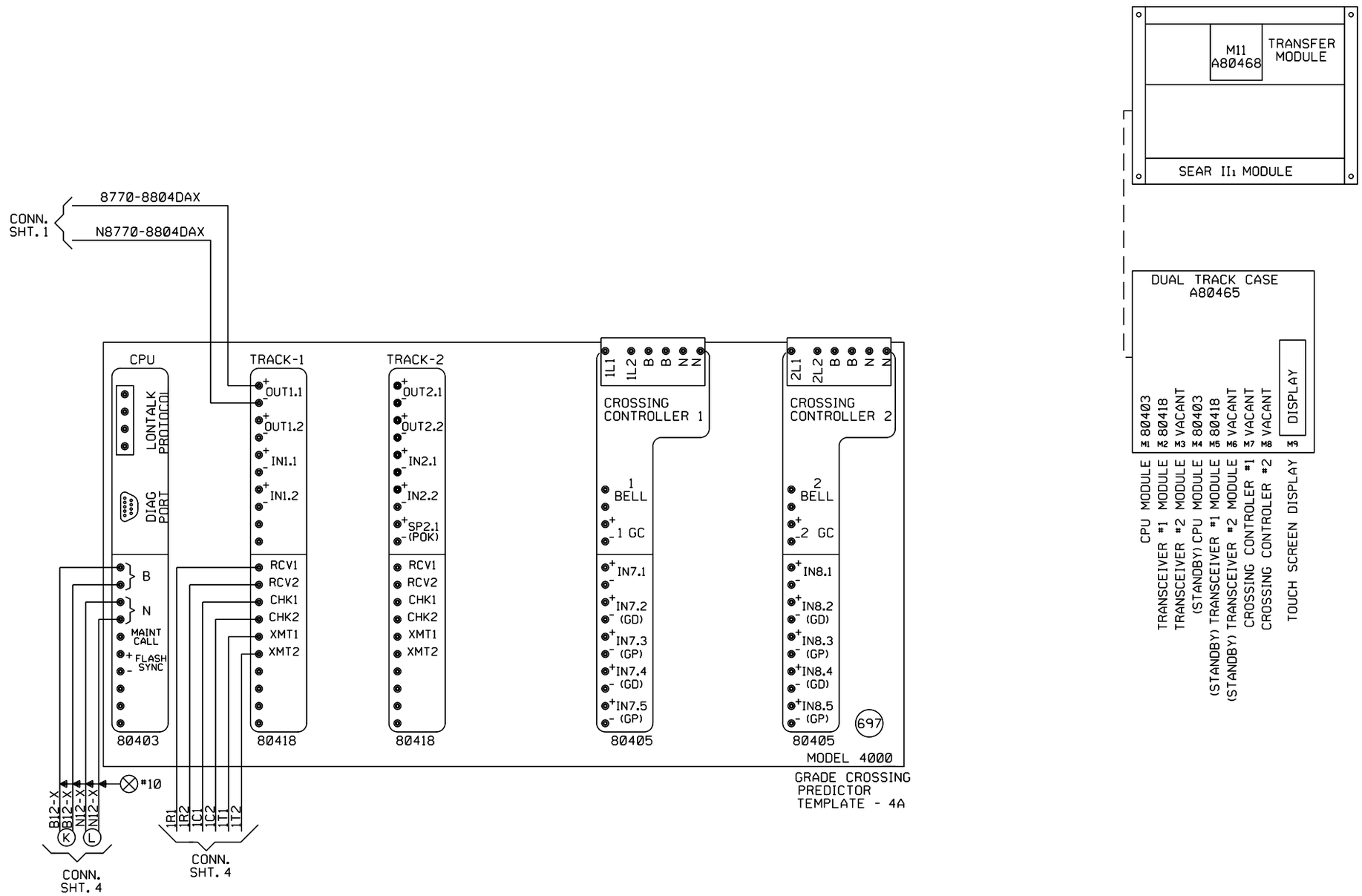


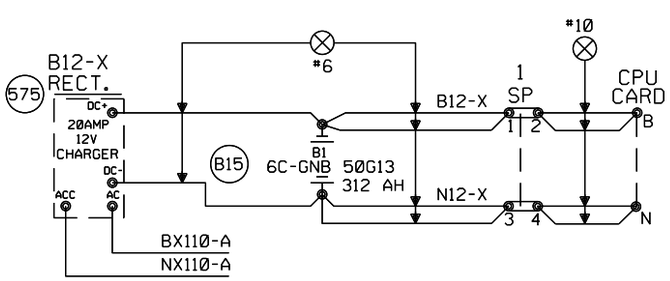


| "Mf" FREQUENCY (HZ) | MAXIMUM TRANSMIT WIRE LENGTH (FEET) |
|---|---|
| 86 | 100 |
| 114 | 125 |
| 156 | 150 |
| 211 | 200 |
| 285-970 | 250 |

NOTE:
EACH TRANSMITTER TO RAIL WIRE FROM XMT1 AND XMT2 MUST NOT EXCEED THE MAXIMUM LENGTH SPECIFIED IN THE TABLE SHOWN. THE RECEIVER WIRE LENGTH IS NOT CRITICAL. DOES NOT APPLY TO 6 TRACK WIRE APPLICATION.

NEW SHEET

Designed: 03/04/13
INSTALL FLASHERS W/GATES & CWT. TR 75 M.P. 188.04
Rec#: WO#: 18265
IS: /MRN / /XRL/JTB

| MODIFICATION LEVEL | |
|---|---|
| Q. A. LAST LEVEL CHECKED | DU |
| LAST LEVEL MOD THIS TYPICAL | DU |
| LAST LEVEL BY DESIGNER | DU |
| CHANGED FROM TYPICAL? | Y |

REV 01.24.11 4K 2TKGF.3

CIRCUIT MODIFICATIONS ARE NOT TO BE MADE WITHOUT AUTHORITY FROM THE OFFICE OF SIGNAL DESIGN

Date: 03/04/13
Des: XRL
Chk: MRN
AFE: 18265

UNION PACIFIC RAILROAD
WESTERVELT, ILLINOIS
REMOTE LOCATION
PANA SUBDIVISION
Office of Sr AVP Engineering - Signal/TCO Omaha, Nebraska

Sh.: 3
DOT 000000R
MP: 187.70
ID: 030218770.3X

## Minimum Program Steps Report

### Location and SIN

DOT Number: 000000R
Milepost Number: 187.70
Site Name: WESTERVELT, IL

SIN: 762010010016 *

* Parameter is part of office check number calculation.

### MCF and Template Selection

MCF Name: GCP-T6X-02-4.mcf
MCF Revision: 24
MCFCRC: 09FC363B

Template = 4A:6 Remotes (OCCN) *

* Parameter is part of office check number calculation.

### Minimum Program Steps

TEMPLATE: track 1-Remote Dax
Track 1 : GCP Frequency = 348 Hz (Field,TCN)
Track 1 : Approach Distance = 3697 ft (Set in Field,TCN)
Track 1 : Dax A Warning Time = 31 sec (OCCN) *
Track 1 : Dax A Offset Distance = 1713 ft (Set in Field)
Track 1 : GCP Transmit Level = Medium (Set in Field,TCN)

TEMPLATE: OOS
OOS Timeout = 1 hrs (Set in Field)

TEMPLATE: OP assignment 1
OUT 1.1 = T1 Dax A (OCCN) *

ADVANCED: site options
Daylight Savings = Off (Set in Field)

* Parameter is part of office check number calculation.

### Check Numbers

Office Check Number: 140CF2CE
Config. Check Number: 267DB7BF
(Based on MCF Revision 24)

Parameters not part of office check number calculation:

Track 1 : GCP Frequency = 348 Hz
Track 1 : Approach Distance = 3697 ft (Set in Field)
Track 1 : Dax A Offset Distance = 1713 ft (Set in Field)
Track 1 : GCP Transmit Level = Medium (Set in Field)
OOS Timeout = 1 hrs (Set in Field)
Daylight Savings = Off (Set in Field)

### Comments

<none>

### Configuration Package File

Filename: 030218770_000000R.pac
Path:
Date/Time: 6/18/2013 10:39:05
DT Version: 5.3.3

NEW SHEET

| | | | | | | | | | |
|---|---|---|---|---|---|---|---|---|---|
| | | | | Designed: 03/04/13<br>INSTALL FLASHERS W/GATES & CWT. TR 75 M.P. 188.04<br>Rec#: WO#: 18265<br>IS: /MRN / /XRL/JTB | **NOTE: Actual OFFSET and ISLAND distances must be entered by field personnel.** | CIRCUIT MODIFICATIONS ARE NOT TO BE MADE WITHOUT AUTHORITY FROM THE OFFICE OF SIGNAL DESIGN | Date: 03/04/13<br>Des: XRL<br>Chk: MRN<br>AFE: 18265 | UNION PACIFIC RAILROAD<br>WESTERVELT, ILLINOIS<br>REMOTE LOCATION<br>PANA SUBDIVISION<br>Office of Sr AVP Engineering - Signal/TCO Omaha, Nebraska | Sh.: 3A<br>DOT 000000R<br>MP: 187.70<br>ID: 030218770.3AX |

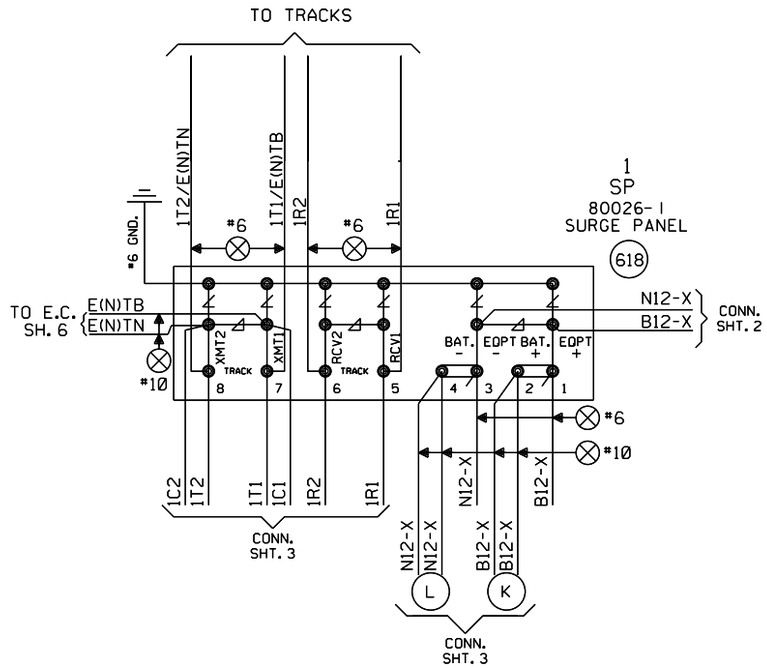


NEW SHEET

| | | | | | | | | | | | |
|---|---|---|---|---|---|---|---|---|---|---|---|
| | | | | | Designed: 03/04/13<br>INSTALL FLASHERS W/GATES & CWT. TR 75 M.P. 188.04<br>Rec#: WO#: 18265<br>IS: /MRN<br>/ /XRL/JTB | MODIFICATION LEVEL | | CIRCUIT MODIFICATIONS ARE NOT TO BE MADE WITHOUT AUTHORITY FROM THE OFFICE OF SIGNAL DESIGN | Date: 03/04/13<br>Des: XRL<br>Chk: MRN<br>AFE: 18265 | UNION PACIFIC RAILROAD<br>WESTERVELT, ILLINOIS<br>REMOTE LOCATION<br>PANA SUBDIVISION<br>Office of Sr AVP Engineering - Signal/TCO Omaha, Nebraska | Sh.: 4<br>DOT 000000R<br>MP: 187.70<br>ID: 030218770.4X |
| | | | | | | Q.A. LAST LEVEL CHECKED | DU | | | | |
| | | | | | | LAST LEVEL MOD THIS TYPICAL | DU | | | | |
| | | | | | | LAST LEVEL BY DESIGNER | DU | | | | |
| | | | | | | CHANGED FROM TYPICAL?<br>REV 01.24.11 4K REMOTE.4 | Y | | | | |

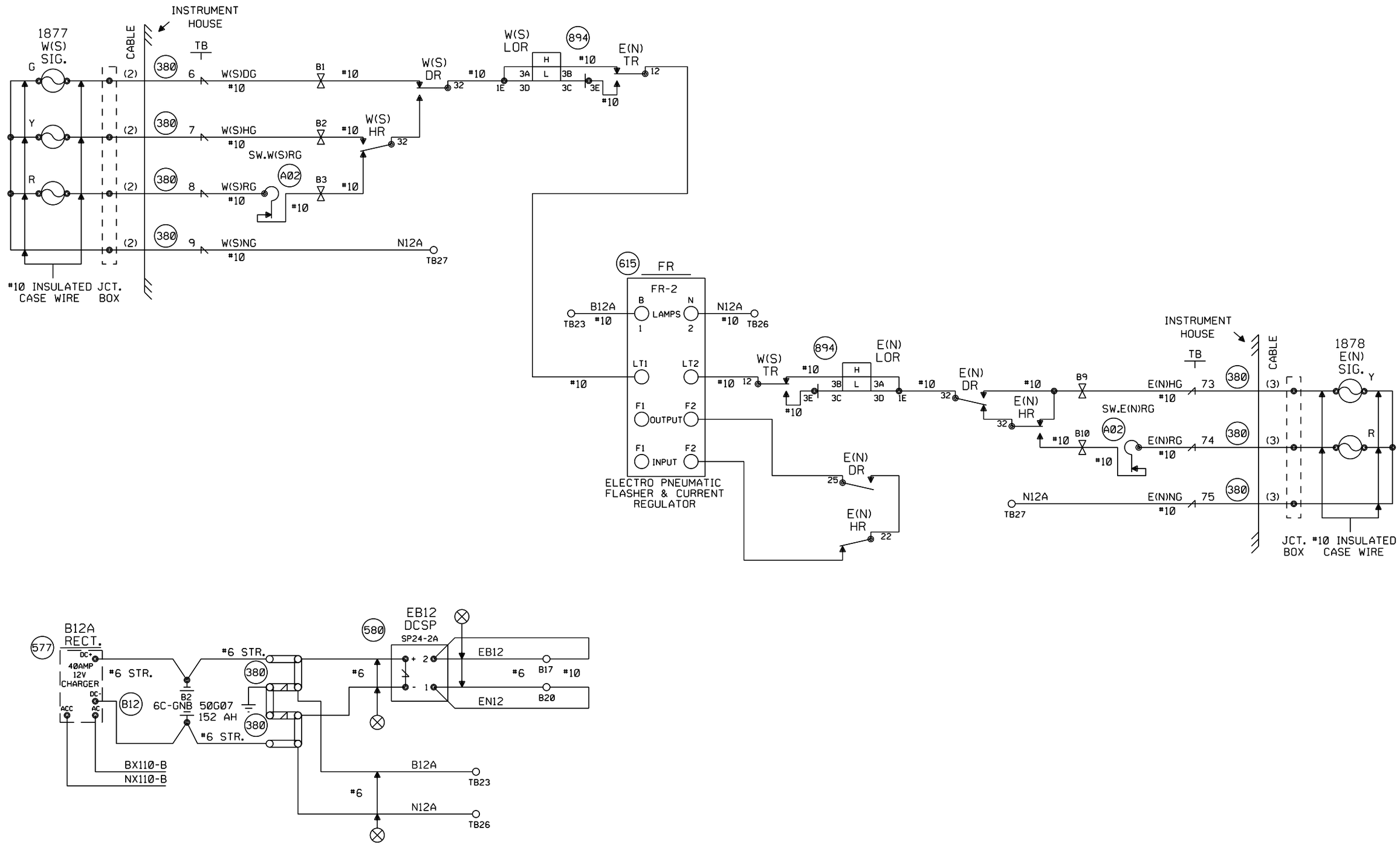


CABLE TABULATION

CABLE NO.2-5C.N0.6 HSE. TO SIGNAL W(S)
CABLE NO.3-5C.N0.6 HSE. TO SIGNAL E(N)

NEW SHEET

| | | | | | | | | | | | |
|---|---|---|---|---|---|---|---|---|---|---|---|
| | | | | | | | Designed: 03/04/13<br>INSTALL FLASHERS W/GATES & CWT. TR 75 M.P. 188.04<br>Rec#: WO#: 18265<br>IS: /MRN<br>/ /XRL/JTB | CIRCUIT MODIFICATIONS ARE NOT TO BE MADE WITHOUT AUTHORITY FROM THE OFFICE OF SIGNAL DESIGN | Date: 03/04/13<br>Des: XRL<br>Chk: MRN<br>AFE: 18265 | UNION PACIFIC RAILROAD<br>WESTERVELT, ILLINOIS<br>REMOTE LOCATION<br>PANA SUBDIVISION<br>Office of Sr AVP Engineering - Signal/TCO Omaha, Nebraska | Sh.: 5<br>DOT 000000R<br>MP: 187.70<br>ID: 030218770.5S |

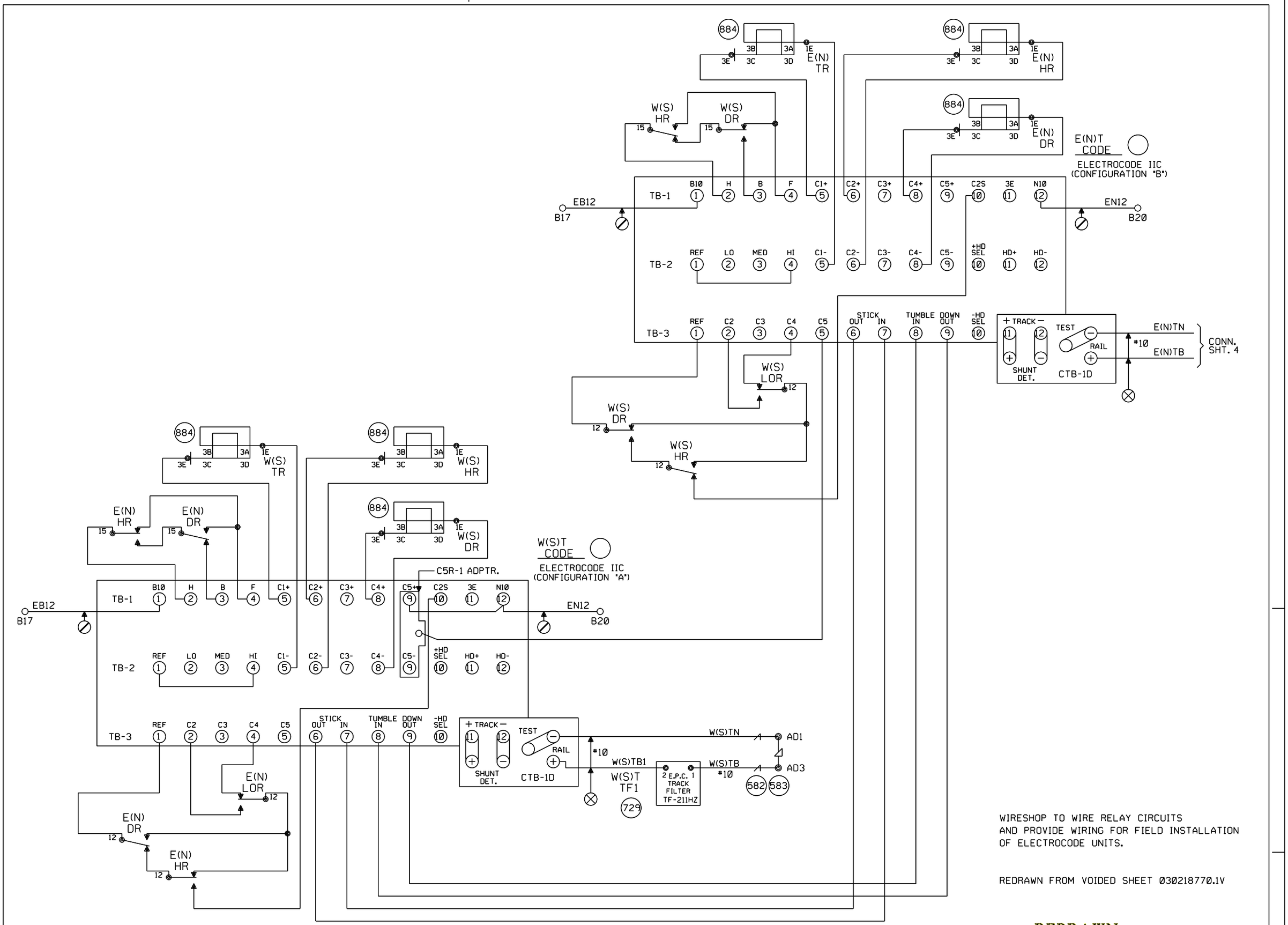


WIRESHOP TO WIRE RELAY CIRCUITS
AND PROVIDE WIRING FOR FIELD INSTALLATION
OF ELECTROCODE UNITS.

REDRAWN FROM VOIDED SHEET 030218770.1V

REDRAWN

| | | | | | |
|---|---|---|---|---|---|
| Designed: 03/04/13<br>INSTALL FLASHERS W/GATES & CWT.<br>TR 75<br>M.P. 188.04<br>Rec#: WO#: 18265<br>IS: /MRN<br>/ /XRL/JTB | CIRCUIT MODIFICATIONS ARE NOT TO BE MADE WITHOUT AUTHORITY FROM THE OFFICE OF SIGNAL DESIGN | Date: 03/04/13<br>Des: XRL<br>Chk: MRN<br>AFE: 18265 | UNION PACIFIC RAILROAD<br>WESTERVELT, ILLINOIS<br>REMOTE LOCATION<br>PANA SUBDIVISION<br>Office of Sr AVP Engineering - Signal/TCO Omaha, Nebraska | Sh.: 6<br>DOT 000000R<br>MP: 187.70<br>ID: 030218770.6S | |

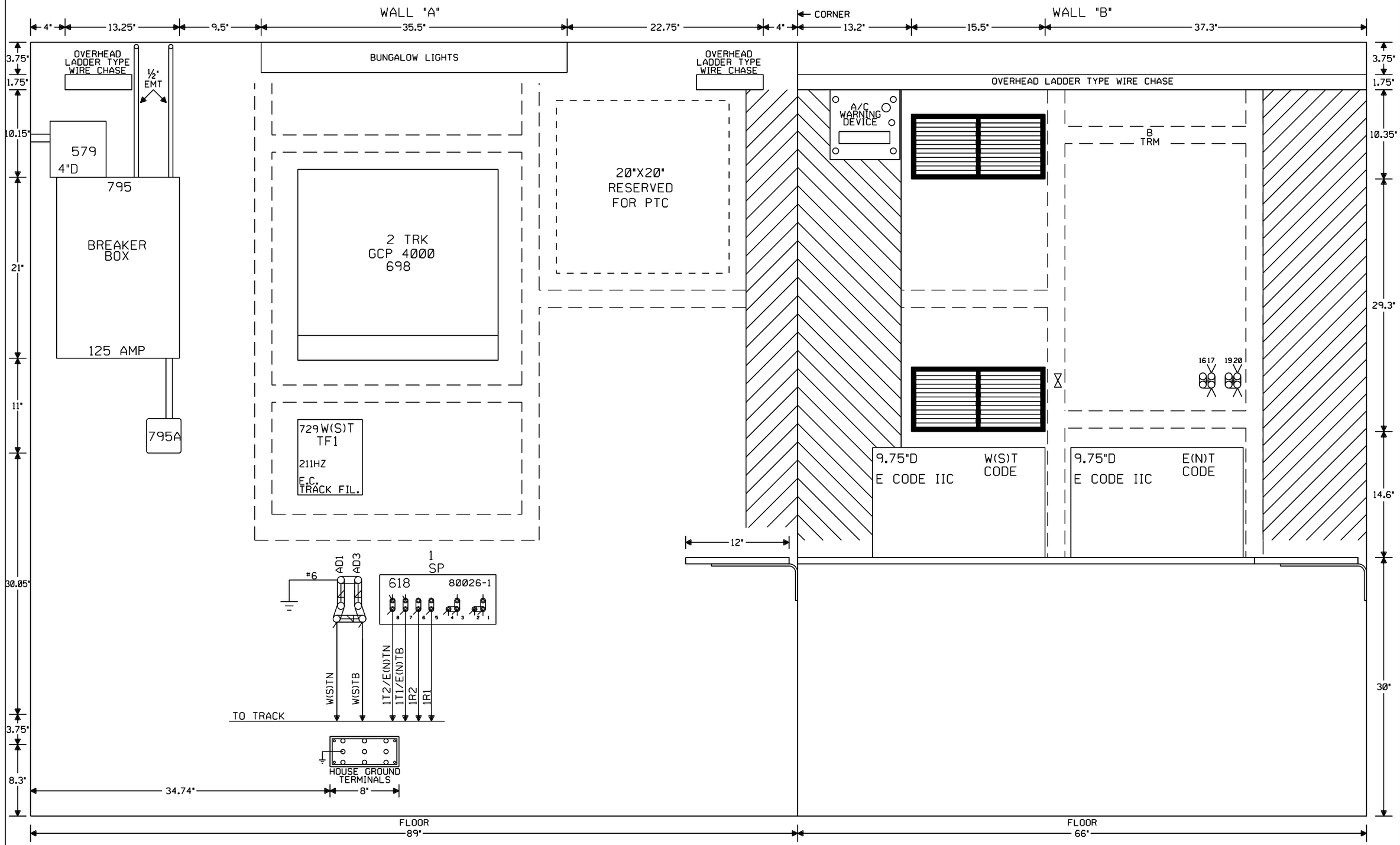


**NEW SHEET**

| | | | | | | |
|---|---|---|---|---|---|---|
| Designed: 03/04/13<br>INSTALL FLASHERS W/GATES & CWT.<br>TR 75<br>M.P. 188.04<br>Rec#: WO#: 18265<br>IS: /MRN<br>/ / XRL/JTB | CIRCUIT MODIFICATIONS ARE NOT TO BE MADE WITHOUT AUTHORITY FROM THE OFFICE OF SIGNAL DESIGN | Date: 03/04/13<br>Des: XRL<br>Chk: MRN<br>AFE: 18265 | UNION PACIFIC RAILROAD<br>WESTERVELT, ILLINOIS<br>REMOTE LOCATION<br>PANA SUBDIVISION<br>Office of Sr AVP Engineering - Signal/TCO Omaha, Nebraska | Sh.: 7<br>DOT 000000R<br>MP: 187.70<br>ID: 030218770.7X | | |

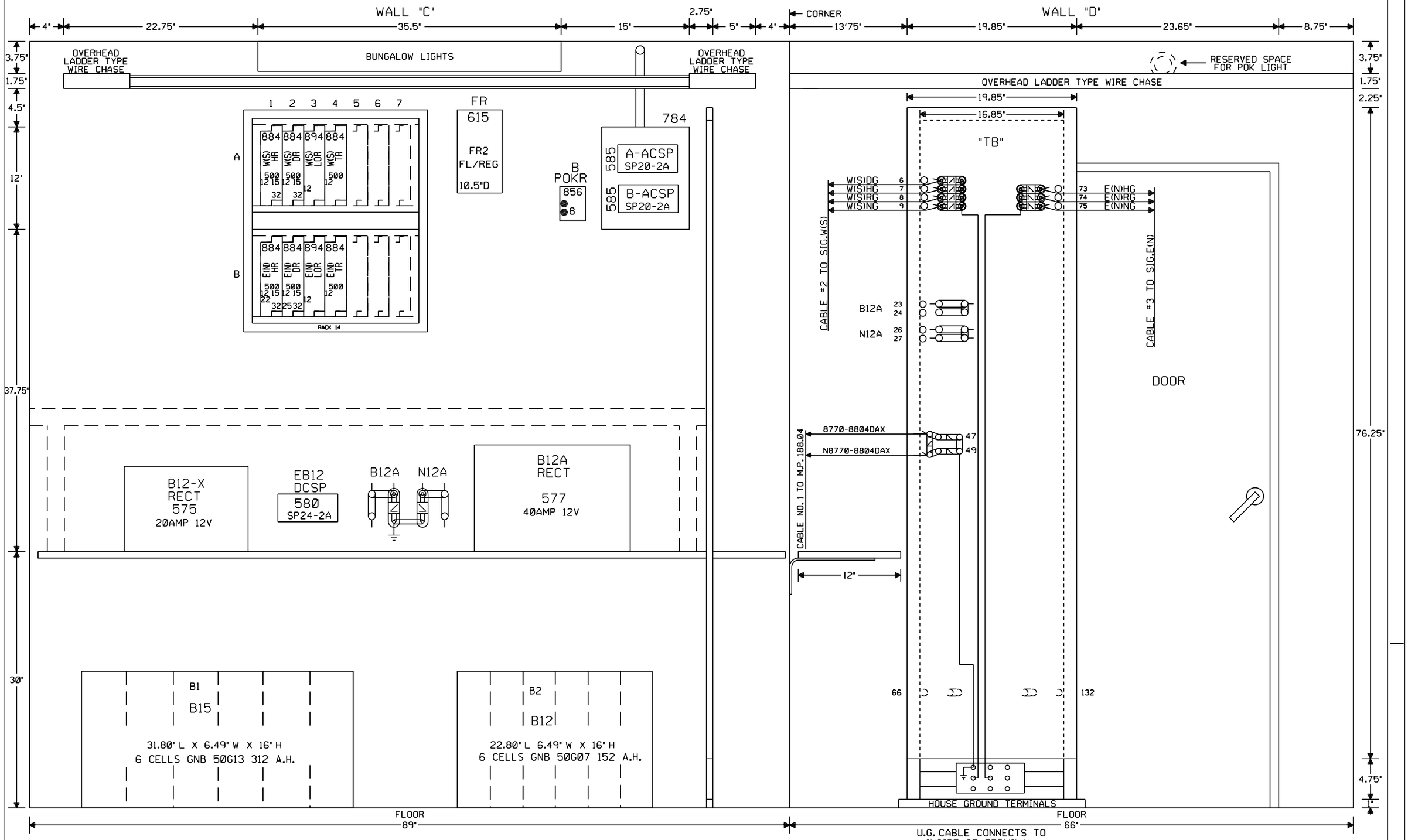


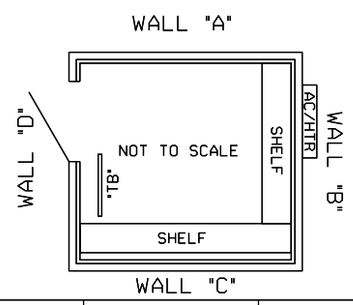


NOTE: ALL DIMENSIONS SHOWN
ARE APPROXIMATE.

**NEW SHEET**

| | | | | | | |
|---|---|---|---|---|---|---|
| Designed: 03/04/13<br>INSTALL FLASHERS W/GATES & CWT. TR 75 M.P. 188.04<br>Rec": WO": 18265 /MRN<br>IS: / / XRL/JTB | CIRCUIT MODIFICATIONS ARE NOT TO BE MADE WITHOUT AUTHORITY FROM THE OFFICE OF SIGNAL DESIGN | Date: 03/04/13<br>Des: XRL<br>Chk: MRN<br>AFE: 18265 | UNION PACIFIC RAILROAD<br>WESTERVELT, ILLINOIS<br>REMOTE LOCATION<br>PANA SUBDIVISION<br>Office of Sr AVP Engineering - Signal/TCO Omaha, Nebraska | Sh.: 8<br>DOT 000000R<br>MP: 187.70<br>ID: 030218770.8X | | |

ST. LOUIS 6-13-84
DRAWN BY ELT
CHECKED CGM
AFE 840342

MO. PAC. R. R. CO.

S-302-M
DW. 1877-78
SH. 1

PLACED IN SERVICE _____ BY _____

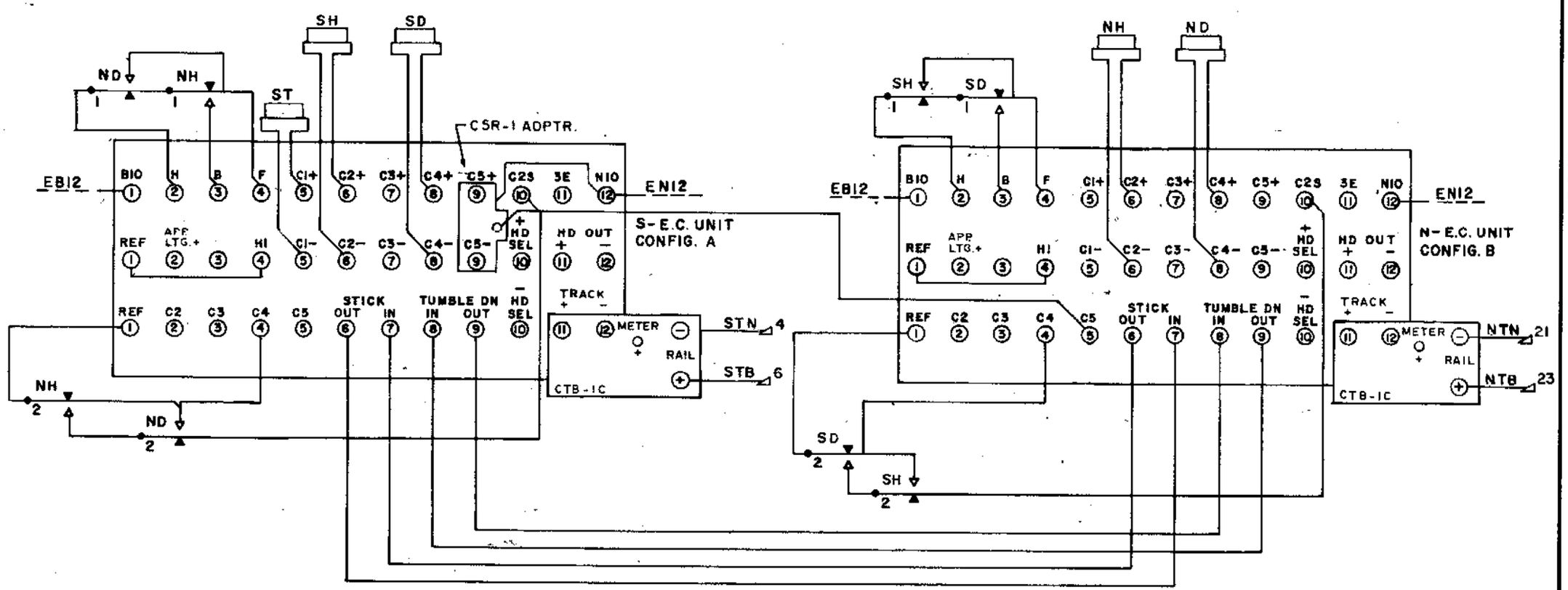


TO BE VOIDED
WO# 18265 03-04-13 XRL

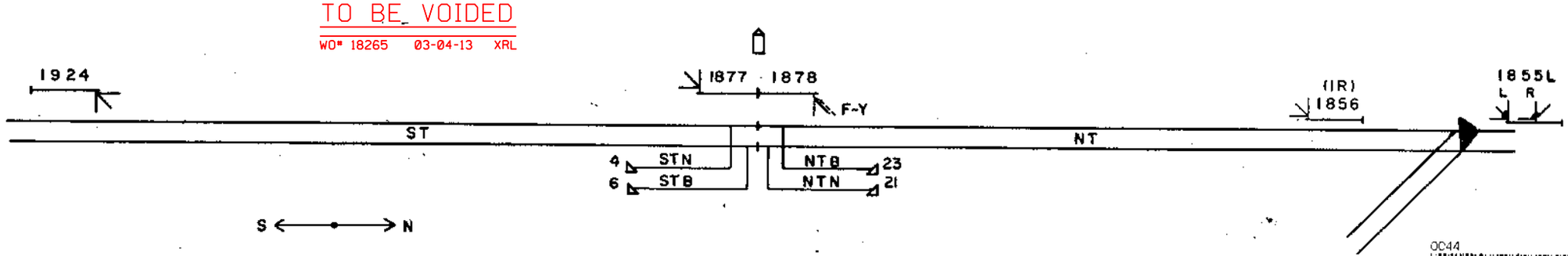


ORIGINAL

0044
1 5 7 4 7 4

ST. LOUIS 6-13-84
DRAWN BY ELT
CHECKED CGM
AFE 840342

MO. PAC. R. R. CO.

S-302-M
DW. 1877-78
SH. 2

PLACED IN SERVICE _____ BY _____

TO BE VOIDED
WO# 18265 03-04-13 XRL

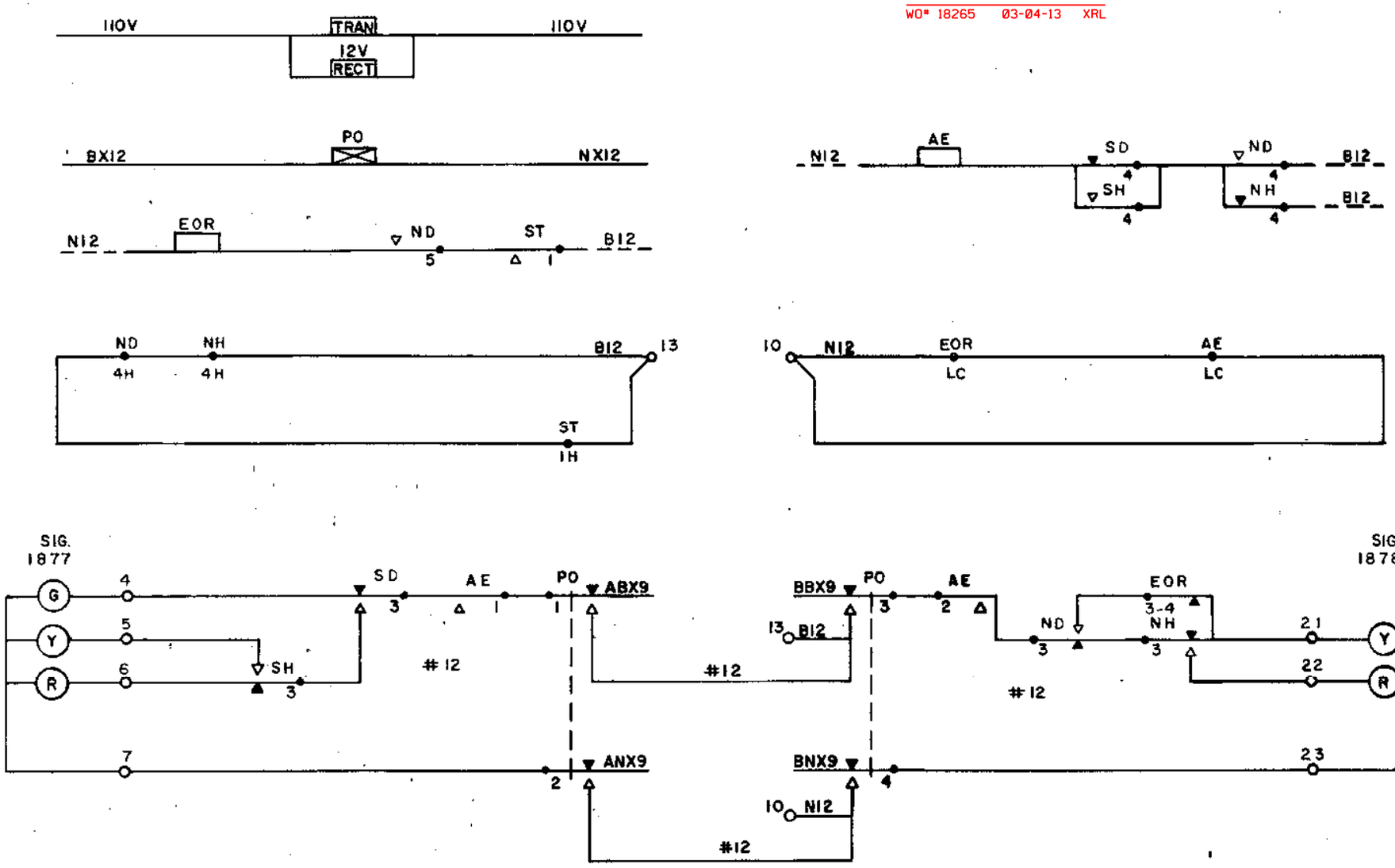


28-E.C.-E

0044
1 5 7 4 7 5

ST. LOUIS 6-13-84
DRAWN BY ELT
CHECKED CGM
AFE 840342

MO. PAC. R. R. CO.

S-302-M
DW. 1877-78
SH. 3

PLACED IN SERVICE ____ BY ____

BACK

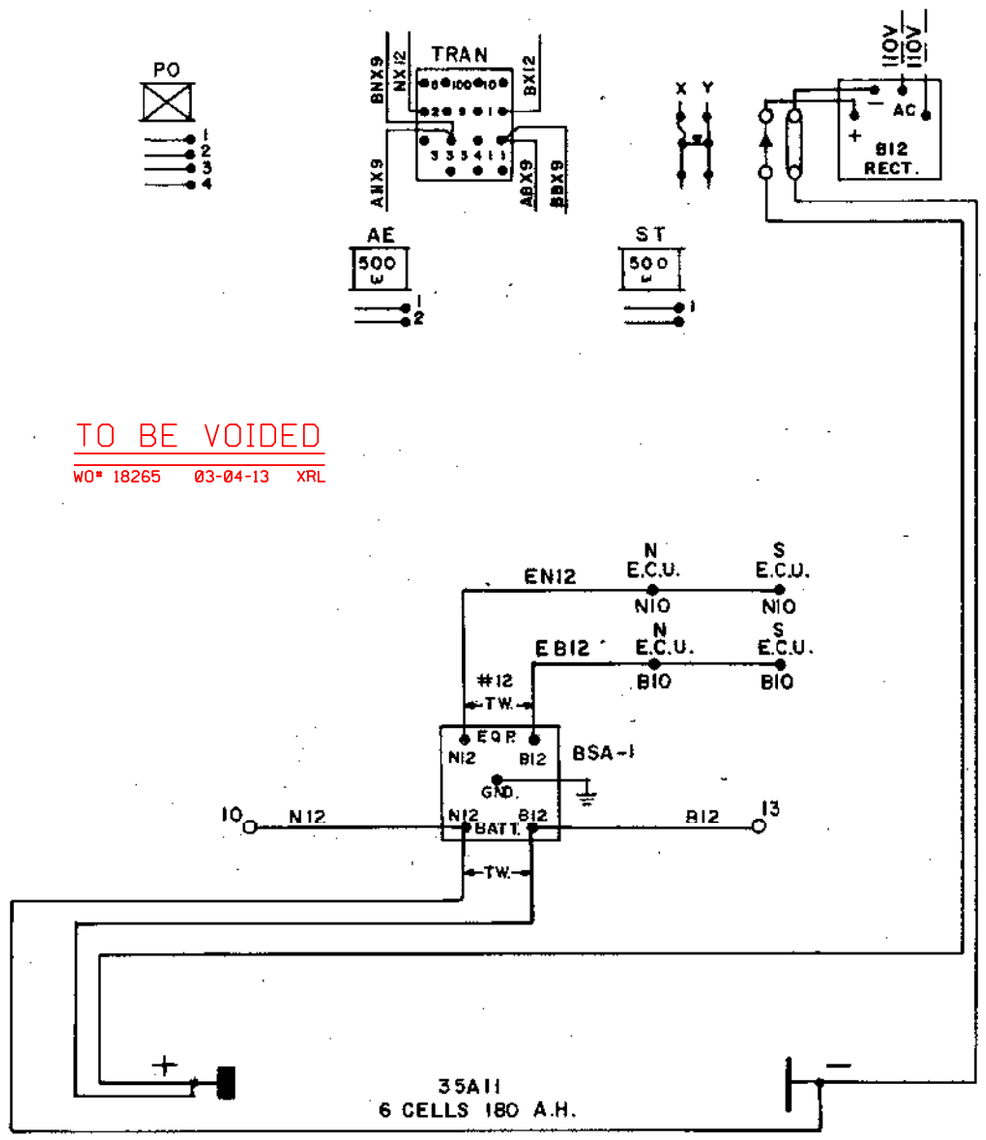


TO BE VOIDED
WO# 18265 03-04-13 XRL

FRONT

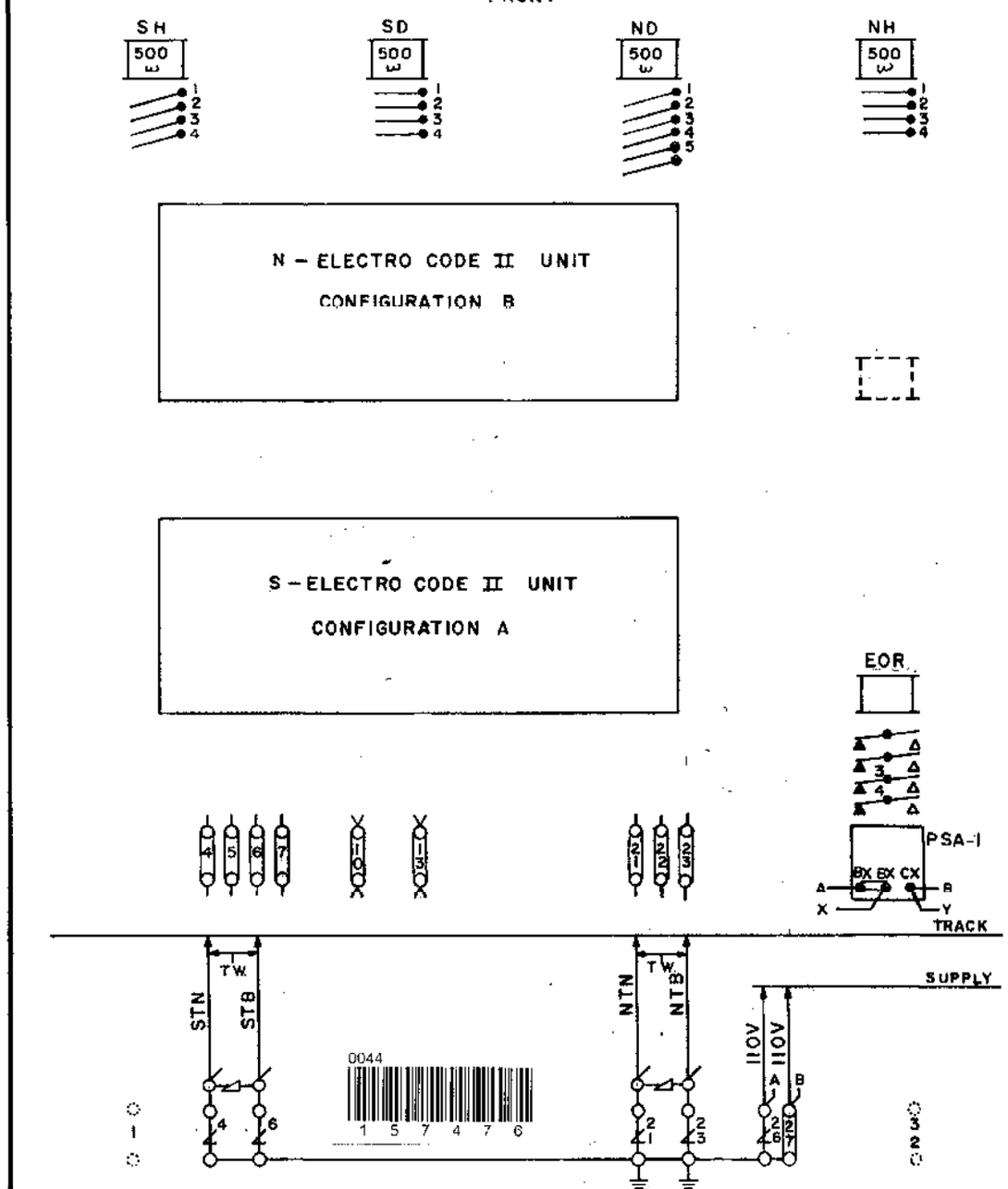


E.C. 12

ORIGINAL