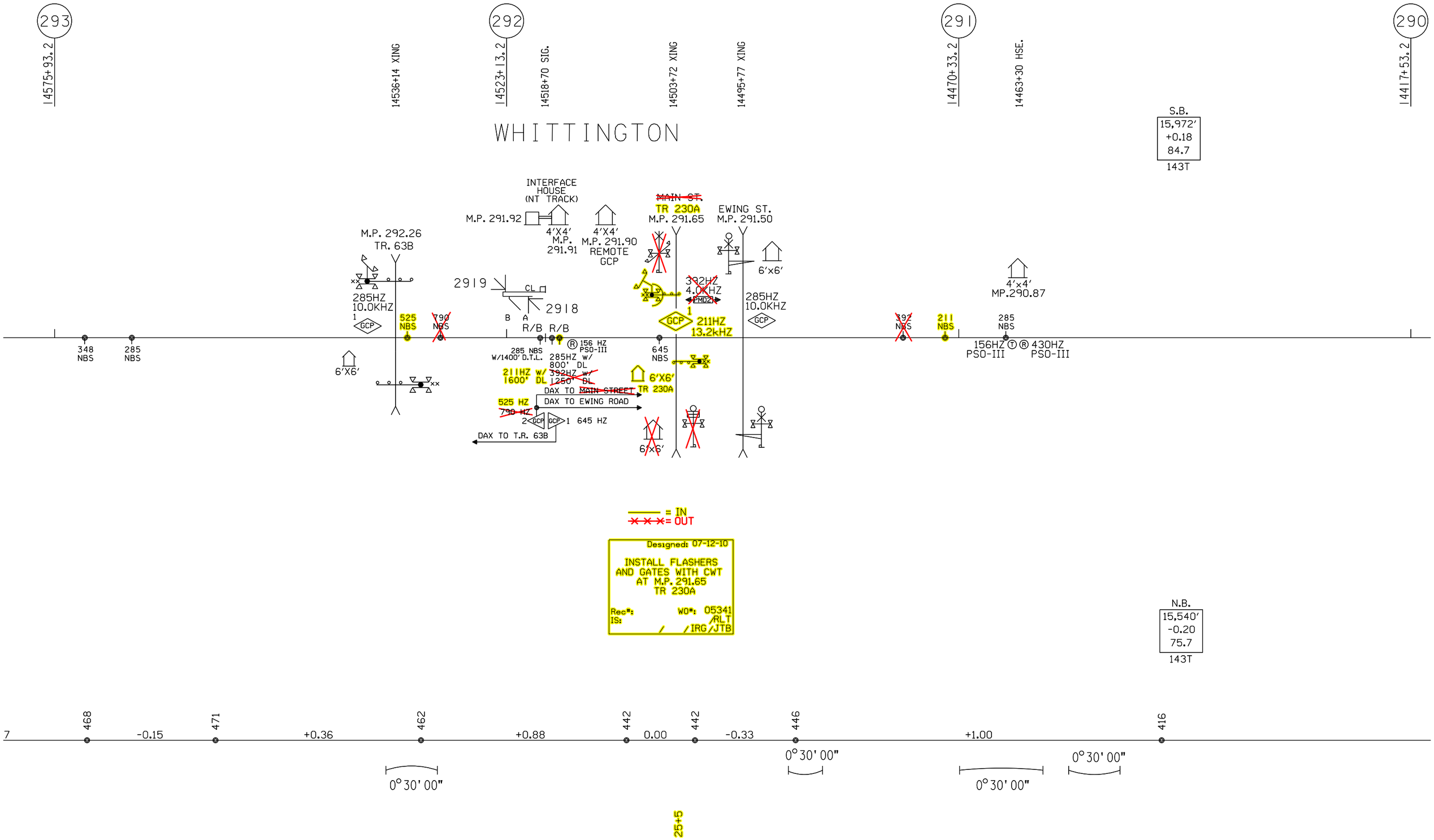
293
292
291
290
14575+93.2
14536+14 XING
14523+13.2
14518+70 SIG.
14503+72 XING
14495+77 XING
14470+33.2
14463+30 HSE.
14417+53.2
WHITTINGTON
S.B.
15,972'
+0.18
84.7
143T
INTERFACE HOUSE (NT TRACK)
M.P. 291.92
4'X4'
M.P. 291.91
4'X4'
M.P. 291.90 REMOTE GCP
MAIN ST.
TR 230A
M.P. 291.65
EWING ST.
M.P. 291.50
6'x6'
4'x4'
MP.290.87
M.P. 292.26
TR. 63B
285HZ
10.0KHZ
525 NBS
790 NBS
2919
CL
2918
B A
R/B R/B
392HZ
4.0KHZ
PMD21
GCP
211HZ
13.2kHZ
285HZ
10.0KHZ
392 NBS
211 NBS
285 NBS
348 NBS
285 NBS
285 NBS W/1400' D.T.L.
156 HZ PSO-III
285HZ w/ 800' DL
645 NBS
156HZ PSO-III
430HZ PSO-III
6'X6'
211HZ w/ 1600' DL
392HZ w/ 1250' DL
6'X6'
TR 230A
DAX TO MAIN STREET
DAX TO EWING ROAD
525 HZ
790 HZ
645 HZ
DAX TO T.R. 63B
6'X6'
= IN
= OUT
Designed: 07-12-10
INSTALL FLASHERS AND GATES WITH CWT AT M.P. 291.65 TR 230A
Rec#:
WO#: 05341
IS:
/RLT
/ /IRG/JTB
N.B.
15,540'
-0.20
75.7
143T
7
468
-0.15
471
+0.36
462
+0.88
442
0.00
442
-0.33
446
+1.00
416
0° 30' 00"
0° 30' 00"
0° 30' 00"
0° 30' 00"
2545

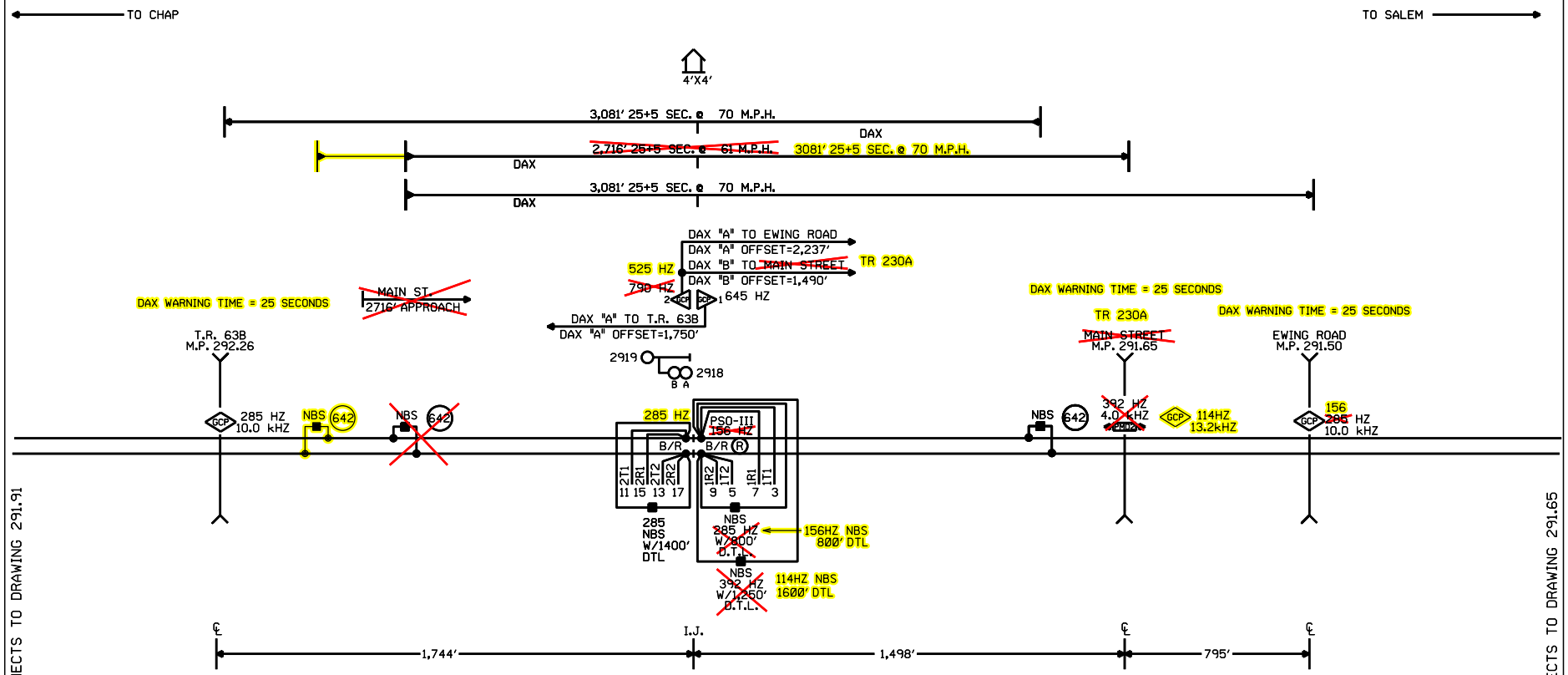

NOTES:

⊗ = TWISTED WIRES
ALL TRACK WIRES 2C. #6
INSULATED 1 TWIST PER FT.

TRANSMITTER AND RECEIVER LEADS TO BE SEPARATED BY AT LEAST 12" IN TRENCH, LENGTHS SHOULD NOT EXCEED MANUFACTURER'S RECOMMENDATION.

ALL BUNGALOW WIRING TO BE #16 AWG FLEX UNLESS OTHERWISE SPECIFIED EXCEPT ALL GROUND WIRE TO BE #6 AWG FLEX OR LARGER.

REFER TO UP STANDARD DWG. FOR BUNGALOW GROUNDING.

= EXISTING, REVISE IF AC'D

= IN

~~X X X~~ = OUT

S ← → N

CABLE TABULATION

CABLE NO.1-7C.NO.14 U.G.B.T. HOUSE TO M.P. 291.65.
CABLE NO.2-7C.NO.14 U.G.B.T.HOUSE TO M.P. 292.26.

WHITTINGTON, ILLINOIS
REMOTE LOCATION
M.P. 291.90
MT. VERNON SUBDIVISION

Designed: 7/12/10 INSTALL FLASHERS AND GATES WITH CWT AT M.P. 291.65 TR 230A Req#: WO#: 05341 IS: /RLT / /IRG/JTB	Revised: 02-15-2011 INSTALLED FLASHERS W/GATES & CWT M.P. 292.26 TOWNSHIP ROAD 638 Req#: 17462 WO#: 02249 IS:02-09-2011 /RTL RER/WIT/XRL/JTB	REV. 11-14-07 INSTALL FLS/GATES & CONSTANT WARNING AT EWING ROAD M.P. 291.50 W.O.#44518 REC#13145 9-24-07 JTB RLT/WITT/CTC/JNM	MODIFICATION LEVEL: Q.A. LAST LEVEL CHK'D. DJ; LAST LEVEL MOD. THIS TYP. DJ; LAST LEVEL BY DESIGNER. DJ; CHANGED FROM TYP.? Y/N Y

UNION PACIFIC — QUALITY PRODUCTIVITY SAFETY — SIGNAL DESIGN

DES: CTC
DIG: CTC
CHK: RLT/JTB
A.F.E. 44518
ID: 030129190.1X

UNION PACIFIC RAILROAD
SALEM, ILLINOIS TO
CHAP, ILLINOIS
C.T.C. CIRCUITS
Office of Sr.AVP Engineering - Signal/TCO OMAHA NEBR.

DATE 2-20-04
SHEET 1
DWG 291.90
S-301

(REV. 06.01.04) (REMOTE.1)

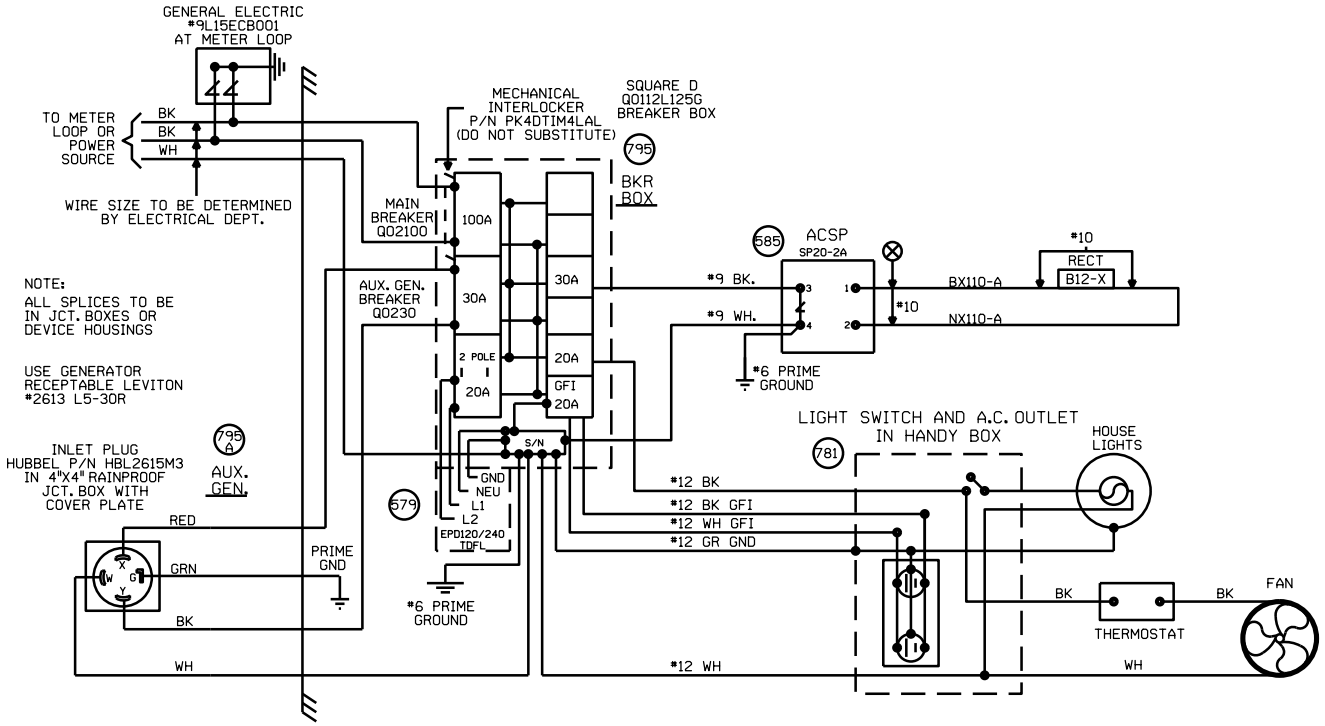

WHITTINGTON, ILLINOIS
REMOTE LOCATION
M.P. 291.90
MT. VERNON SUBDIVISION

					REV. 11-14-07 INSTALL FLS/GATES & CONSTANT WARNING AT EWING ROAD M.P. 291.50 W.O.#44518 REC#13145 9-24-07 JTB RLT/WITT/CTC/JNM	MODIFICATION LEVEL		UNION PACIFIC QUALITY PRODUCTIVITY SAFETY SIGNAL DESIGN	DES: CTC DIG: CTC CHK: JTB A.F.E. 44518 ID= 030129190.2X	UNION PACIFIC RAILROAD SALEM, ILLINOIS TO CHAP, ILLINOIS C.T.C. CIRCUITS Office of Sr.AVP Engineering - Signal/TCO OMAHA NEBR.	DATE 2-20-04 SHEET 2 DWG 291.90 S-301
						Q.A. LAST LEVEL CHK'D.	DJ			
						LAST LEVEL MOD. THIS TYP.	DJ			
						LAST LEVEL BY DESIGNER.	DJ			
						CHANGED FROM TYP.? Y/N	Y			

(REV. 07.30.04) (SEARAC.2)

3-13-23-32-42-50

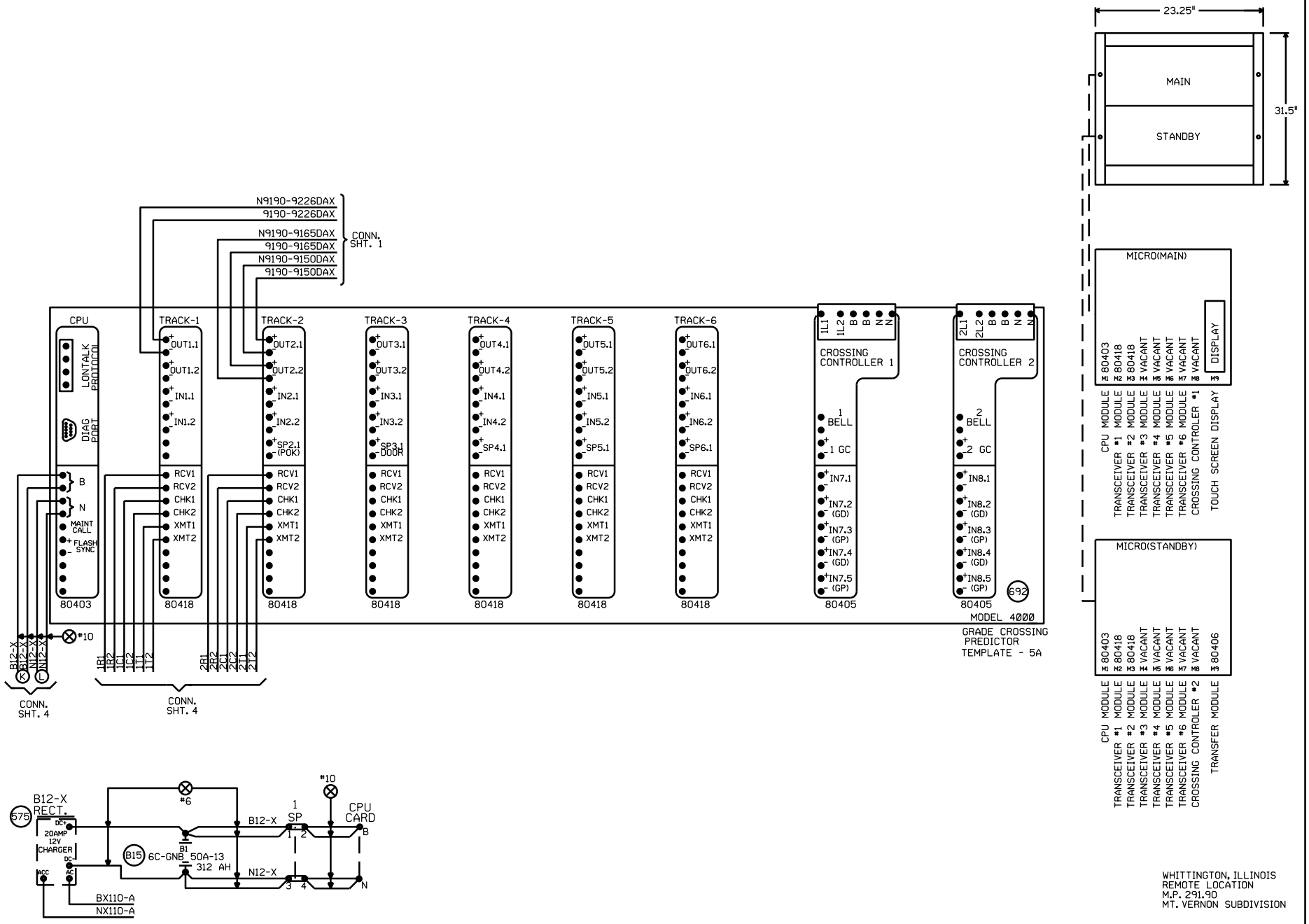

WHITTINGTON, ILLINOIS
REMOTE LOCATION
M.P. 291.90
MT. VERNON SUBDIVISION

Revised 02-15-2011 INSTALLED FLASHERS W/GATES & CWT M.P. 292.26 TOWNSHIP ROAD 63B Req#: 17462 WO#: 02249 IS:02-09-2011 /RTL RER/WIT/XRL/JTB	REV. 11-14-07 INSTALL FLS/GATES & CONSTANT WARNING AT EWING ROAD M.P. 291.50 W.O.#44518 REC#13145 9-24-07 JTB RLT/WITT/CTC/JNM	MODIFICATION LEVEL: Q.A. LAST LEVEL CHK'D. DJ; LAST LEVEL MOD. THIS TYP. DJ; LAST LEVEL BY DESIGNER. DJ; CHANGED FROM TYP.? Y/N Y	UNION PACIFIC QUALITY PRODUCTIVITY SAFETY SIGNAL DESIGN

DES: CTC
DIG: CTC
CHK: JTB
A.F.E. 44518
ID= 030129190.3X

UNION PACIFIC RAILROAD
SALEM, ILLINOIS TO
CHAP, ILLINOIS
C.T.C. CIRCUITS
Office of Sr.AVP Engineering - Signal/TCO OMAHA NEBR.

DATE 2-20-04
SHEET 3
DWG 291.90
S-301

(REV. 07.30.04)(4TKB4GF.4)

4-14-24-33-51

```
Minimum Program Steps Report
----------------------------

Location and SIN
----------------
DOT Number: 000000A
Milepost Number: MP 291.90
Site Name: whittington remote

SIN: 762010010016 *

* Parameter is part of office check number calculation.

MCF and Template Selection
--------------------------
MCF Name: GCP_T6X_01_1
MCF Revision: 011
MCFCRC: 5561E572

Template = MTF_5A: 3 RUni pairs *

* Parameter is part of office check number calculation.

Minimum Program Steps
---------------------
TEMPLATE:  track 1-Remote Dax
Track 1 : GCP Frequency = 645 Hz
Track 1 : Approach Distance = 1361 ft (See Plans)
Track 1 : Dax A Warning Time = 30 sec *
Track 1 : Dax A Offset Distance = 1750 ft (Verify in Field)

TEMPLATE:  track 2-Remote Dax
Track 2 : GCP Frequency = 790 Hz
Track 2 : Approach Distance = 1600 ft (See Plans)
Track 2 : Dax A Warning Time = 30 sec *
Track 2 : Dax A Offset Distance = 2237 ft (Verify in Field)

TEMPLATE:  track 2-Remote Daxes
Track 2 : Dax B Used = Yes *
Track 2 : Dax B Warning Time = 30 sec *
Track 2 : Dax B Offset Distance = 1490 ft (Verify in Field)

TEMPLATE:  track Anding
AND 1 XR Used = No *

TEMPLATE:  OP assignment 1
OUT 1.1 = T1 Dax A *
OUT 2.1 = T2 Dax A *
OUT 2.2 = T2 Dax B *

ADVANCED:  out of service
Out Of Service Timeout = No *

ADVANCED:  site options
Daylight Savings = On *

* Parameter is part of office check number calculation.

Check Numbers
-------------
Office Check No. (DT 4.6.0): 559832DE
Office Check Number: 559832DE
Config. Check Number: 20BDBDA6
(Based on MCF Revision 011)

Parameters not part of office check number calculation:

Track 1 : GCP Frequency = 645 Hz
Track 1 : Approach Distance = 1361 ft (See Plans)
Track 1 : Dax A Offset Distance = 1750 ft (Verify in Field)
Track 2 : GCP Frequency = 790 Hz
Track 2 : Approach Distance = 1600 ft (See Plans)
Track 2 : Dax A Offset Distance = 2237 ft (Verify in Field)
Track 2 : Dax B Offset Distance = 1490 ft (Verify in Field)

Comments
--------
<none>

Configuration Package File
--------------------------
Filename: 030129190_000000R.pac
Path: C:\Field_AC_PAC_File\
Date/Time: 3/07/2011 11:15:08
```

```
Minimum Program Steps Report
----------------------------

Location and SIN
----------------
DOT Number: 000000R
Milepost Number: 291.90
Site Name: WHITTINGTON, IL

SIN: 762010010016 *

* Parameter is part of office check number calculation.

MCF and Template Selection
--------------------------
MCF Name: GCP_T6X_01_1.mcf
MCF Revision: 011
MCFCRC: 5561E572

Template = MTF_5A: 3 RUni pairs *

* Parameter is part of office check number calculation.

Minimum Program Steps
---------------------
TEMPLATE: track 1-Remote Dax
Track 1 : GCP Frequency = 645 Hz (See Plans)
Track 1 : Approach Distance = 1361 ft (See Plans)
Track 1 : Dax A Warning Time = 25 sec *
Track 1 : Dax A Offset Distance = 1750 ft (Verify in Field)

TEMPLATE: track 2-Remote Dax
Track 2 : GCP Frequency = 525 Hz (See Plans)
Track 2 : Approach Distance = 1639 ft (See Plans)
Track 2 : Dax A Warning Time = 25 sec *
Track 2 : Dax A Offset Distance = 2237 ft (Verify in Field)

TEMPLATE: track 2-Remote Daxes
Track 2 : Dax B Used = Yes *
Track 2 : Dax B Warning Time = 25 sec *
Track 2 : Dax B Offset Distance = 1490 ft (Verify in Field)

TEMPLATE: track Anding
AND 1 XR Used = No *

TEMPLATE: OP assignment 1
OUT 1.1 = T1 Dax A *
OUT 2.1 = T2 Dax A *
OUT 2.2 = T2 Dax B *

* Parameter is part of office check number calculation.

Check Numbers
-------------
Office Check No. (DT 4.6.0): 78F70EAC
Office Check Number: 78F70EAC
Config. Check Number: 553D5B72
(Based on MCF Revision 011)

Parameters not part of office check number calculation:

Track 1 : GCP Frequency = 645 Hz
Track 1 : Approach Distance = 1361 ft (See Plans)
Track 1 : Dax A Offset Distance = 1750 ft (Verify in Field)
Track 2 : GCP Frequency = 525 Hz
Track 2 : Approach Distance = 1639 ft (See Plans)
Track 2 : Dax A Offset Distance = 2237 ft (Verify in Field)
Track 2 : Dax B Offset Distance = 1490 ft (Verify in Field)

Comments
--------
<none>

Configuration Package File
--------------------------
Filename: 030129190_000000R.pac
Path: C:\GCP4000 Programming\Union Pacific\05341\Remote\New\
Date/Time: 8/15/2013 9:41:57
DT Version: 5.3.3
```

NOTE: FIELD TO VERIFY PROGRAM AND SEND IN PAC FILE WHEN PROJECT IS PLACED IN SERVICE

——— = IN
✕✕✕ = OUT

Designed: 7/12/10 INSTALL FLASHERS AND GATES WITH CWT AT M.P. 291.65 TR 230A Req#: 15: WO#: 05341 /RLT /IRG/JTB	Revised: 02-15-2011 INSTALLED FLASHERS W/GATES & CWT M.P. 292.26 TOWNSHIP ROAD 63B Req#: 17462 WO#: 02249 /RTL 15:02-09-2011 RER/WIT/XRL/JTB	UNION PACIFIC QUALITY PRODUCTIVITY SAFETY SIGNAL DESIGN	Date: 10/19/09 Des: XRL Chk: AFE: 02249	UNION PACIFIC RAILROAD WHITTINGTON, ILLINOIS REMOTE LOCATION MT. VERNON SUBDIVISION Office of Sr AVP Engineering - Signal/TCO Omaha, Nebraska	Sh.: 3A DOT 000000R MP: 291.90 ID: 030129190.3AX

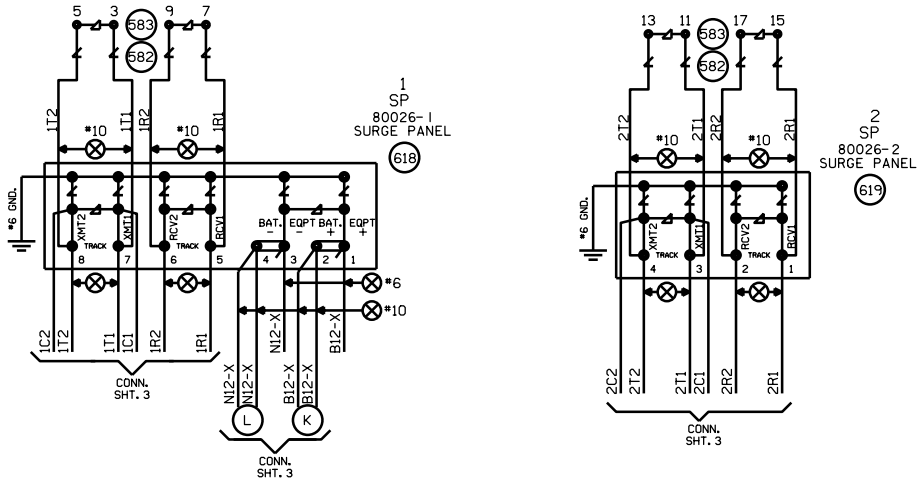

WHITTINGTON, ILLINOIS
REMOTE LOCATION
M.P. 291.90
MT. VERNON SUBDIVISION

REV. 11-14-07 INSTALL FLS/GATES & CONSTANT WARNING AT EWING ROAD M.P. 291.50 W.O.*44518 REC*13145 9-24-07 JTB RLT/WITT/CTC/JNM	MODIFICATION LEVEL Q.A. LAST LEVEL CHK'D. DJ LAST LEVEL MOD. THIS TYP. DJ LAST LEVEL BY DESIGNER. DJ CHANGED FROM TYP.? Y/N Y	UNION PACIFIC QUALITY PRODUCTIVITY SAFETY SIGNAL DESIGN	DES: CTC DIG: CTC CHK: JTB A.F.E. 44518 ID= 030129190.4X	UNION PACIFIC RAILROAD SALEM, ILLINOIS TO CHAP, ILLINOIS C.T.C. CIRCUITS Office of Sr.AVP Engineering - Signal/TCO OMAHA NEBR.	DATE 2-20-04 SHEET 4 DWG 291.90 S-301

(REV. 06.01.04) (REMOTE.4)

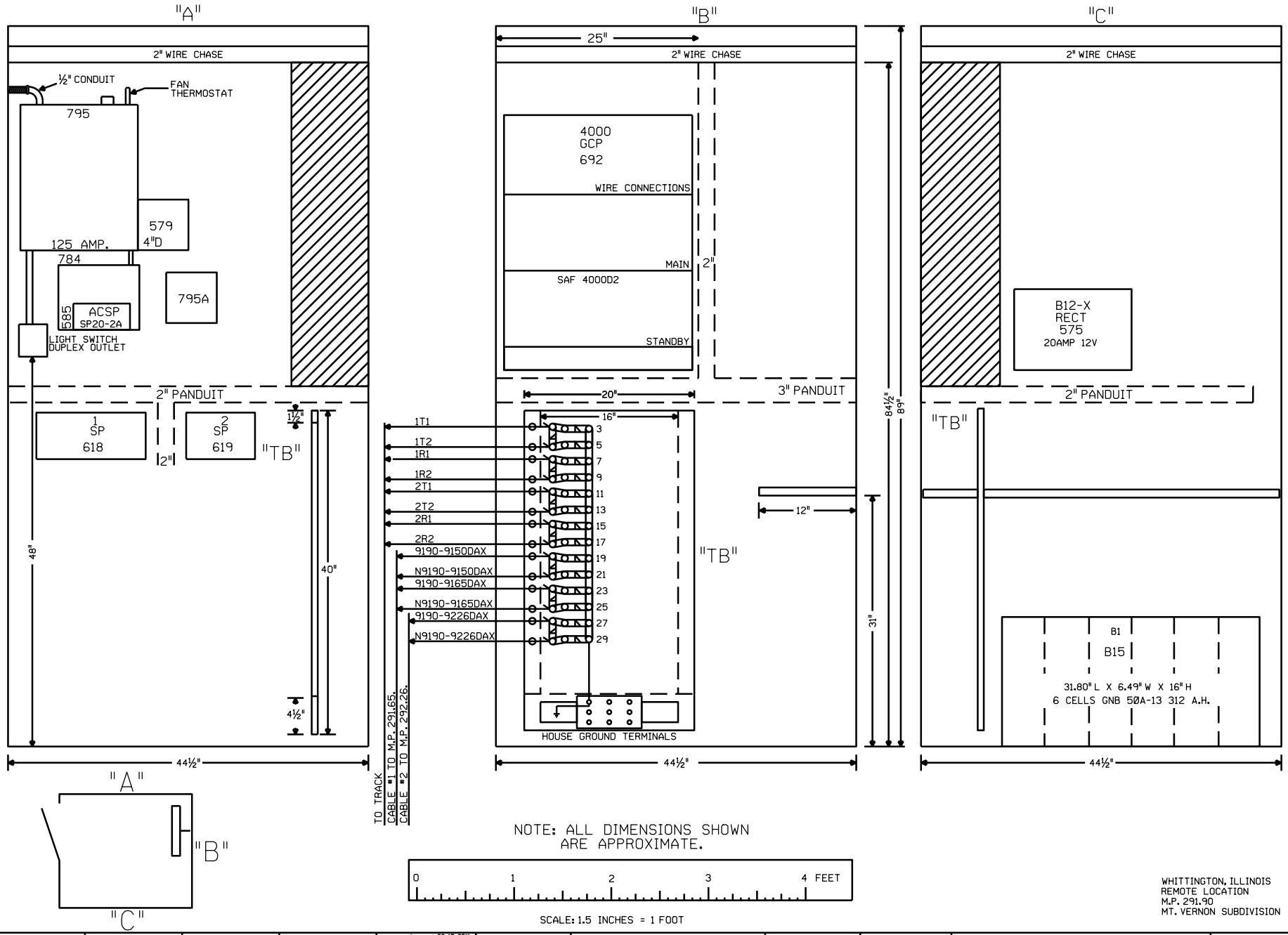

WHITTINGTON, ILLINOIS
REMOTE LOCATION
M.P. 291.90
MT. VERNON SUBDIVISION

				Revised: 02-15-2011 INSTALLED FLASHERS W/GATES & CWT M.P. 292.26 TOWNSHIP ROAD 63B Rec#: 17462 WO#: 02249 IS:02-09-2011 /RTL RER/WIT/XRL/JTB	REV. 11-14-07 INSTALL FLS/GATES & CONSTANT WARNING AT EWING ROAD M.P. 291.50 W.O.#44518 REC#13145 9-24-07 JTB RLT/WITT/CTC/JNM	MODIFICATION LEVEL Q.A. LAST LEVEL CHK'D. DJ LAST LEVEL MOD. THIS TYP. DJ LAST LEVEL BY DESIGNER. DJ CHANGED FROM TYP.? Y/N Y	UNION PACIFIC QUALITY PRODUCTIVITY SAFETY SIGNAL DESIGN	DES: CTC DIG: CTC CHK: JTB A.F.E. 44518 ID=030129190.5X	UNION PACIFIC RAILROAD SALEM, ILLINOIS TO CHAP, ILLINOIS C.T.C. CIRCUITS Office of Sr.AVP Engineering - Signal/TCO OMAHA NEBR.	DATE 2-20-04 SHEET 5 DWG 291.90 S-301

(REV. 06.01.04) (REMOTE.5)

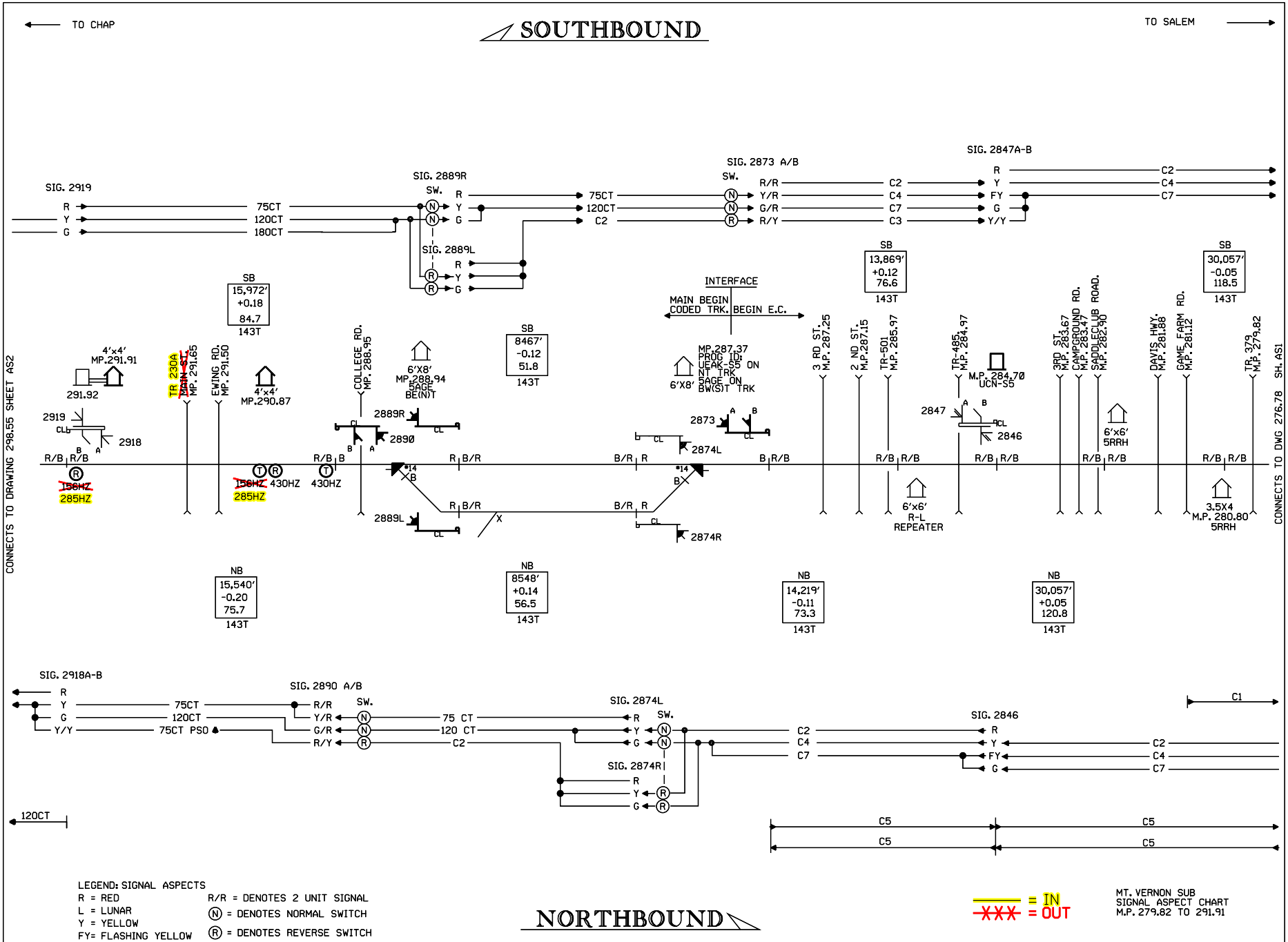

Designed: 7/12/10 INSTALL FLASHERS AND GATES WITH CWT AT M.P. 291.65 TR 230A Rec#: WO#: 05341 IS: /RLT / /IRG/JTB	Revised: 12-10-10 UPDATED M.P. FOR GAME FARM RD. AND DAVIS HWY. Rec#: 17312 WO#: N/A IS: 11-29-10 / /WIT/ /	Revised: 05-10-10 INSTALLED NEW GATES AND A GCP 4000 IN A NEW BUNGALOW AT TR-501 (M.P. 285.97) Rec#: 16842 WO#: 88298 IS: 10-06-09 /CJB JRD/WIT/WIT/JJF	REV. 4-23-09 INSTALLED FLS/GTS W/CWT @ TR 379A/ E. BAKERVILLE RD. M.P. 279.82 W.O. #45539 REC. #15571 10/06/08 RLT TAG/WIT/SSC/JNM	REV. 11-27-07 SIGNAL INA, ILL SIDING MP. 284.70 TO 291.92 W.O.#46294 REC#14932 11-14-07 JJL RLT/WITT/CTC/RCB	REV. 11-7-06 INSTALLED INTERCONNECTION BETWEEN MT. VERNON SUB. AND PINCKNEYVILLE SUB. M.P. 276.78. W.O. #53434 REC. #13891 3-28-06 MWK JEH/WITT/CTC/GWS	REV. 8-8-05 INSTALLED INTERCONN. BETWEEN MT. VERNON SUB. AND PINCKNEYVILLE SUB. M.P. 275.60 TO 284.70 W.O. #46285 REC. #12968 7-27-05 JJL JEH/WITT/CTC/RCB	REV. 12-3-03 INSTALLED EC FROM CP 1279 TO CP 1287 PER FIELD REVISIONS. REC. #12025 12-3-03 PDN/WITT/ /JJP	UNION PACIFIC QUALITY PROTECTIVITY SAFETY SIGNAL DESIGN	DES: JJP DIG: JJP CHK: A.F.E. ID= 030128730.AS1	UNION PACIFIC RAILROAD SALEM, ILL. TO CHAP, ILL C.T.C. CIRCUITS Office of Sr.AVP Engineering - Signal/TCO OMAHA NEBR.	DATE 8-30-00 SHEET AS1 DWG 287.3 S-301-M