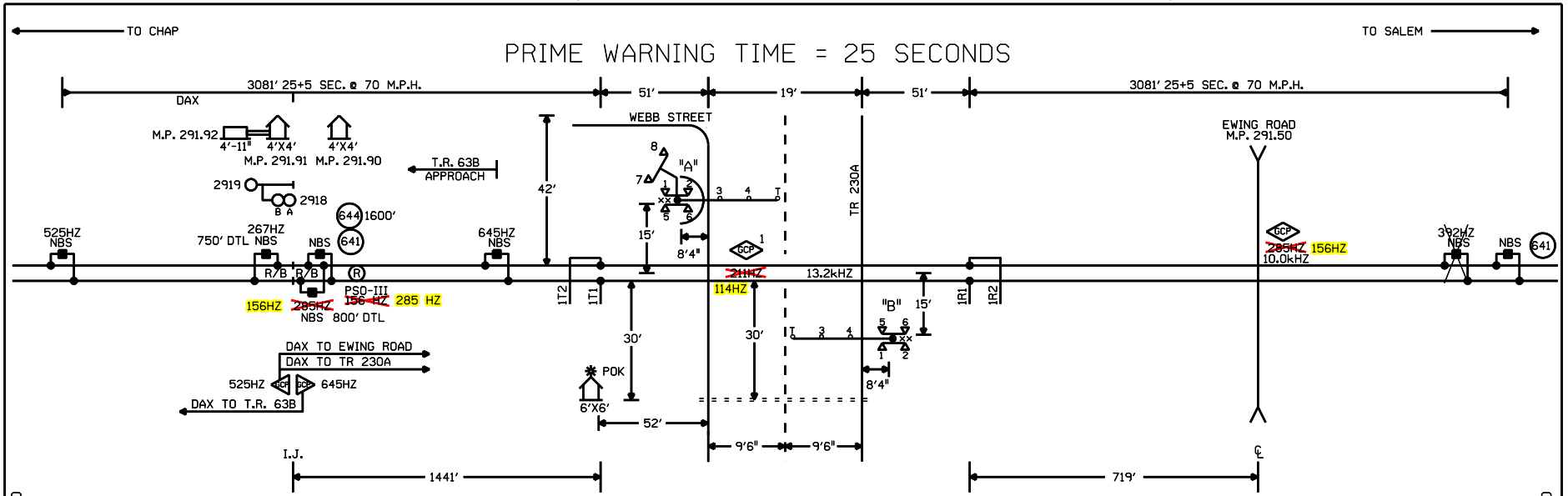

CONNECTS TO M.P. 291.90

CONNECTS TO M.P. 291.50

NOTES:

⊗ = TWISTED WIRES
INSULATED 1 TWIST PER FT.
ALL TRACK WIRES 2C. #6

TRANSMITTER AND RECEIVER LEADS TO BE SEPARATED BY AT LEAST 12" IN TRENCH, LENGTHS SHOULD NOT EXCEED MANUFACTURES RECOMMENDATION.

TOP OF FOUNDATION TO BE AT SAME ELEVATION AS THE SURFACE OF THE TRAVELED WAY & NO MORE THAN 4" ABOVE THE SURFACE OF THE GROUND.

ALL BUNGALOW WIRING TO BE #16 AWG FLEX UNLESS OTHERWISE SPECIFIED EXCEPT ALL GROUND WIRE TO BE #6 AWG FLEX OR LARGER.

ALL WIRING IN GATE MECHANISM TO BE #10 "AWG FLEX".

REFER TO UP STANDARD DWG FOR BUNGALOW GROUNDING.

PORTABLE GENERATOR EXTENSION CORD FOR 240V TO 240V IS PROVIDED AS WELL AS A 120V TO 240V ADAPTER.

ALL LIGHTS TO BE 12" ROUNDELS.

= = = = = = 4" X 40' CONDUIT

LIGHTS: LED LIGHTS

GATE A: 17'
GATE B: 17'

xx = BELL

) = GUARD RAIL

CONSTRUCTION NOTES:

1. ORDER NBS SHUNT TAB 642 FOR NORTH BOUND APPROACH.
2. 7C #14 CABLES ARE EXISTING, WILL NEED (2) SPLICE KITS.

XXX = OUT

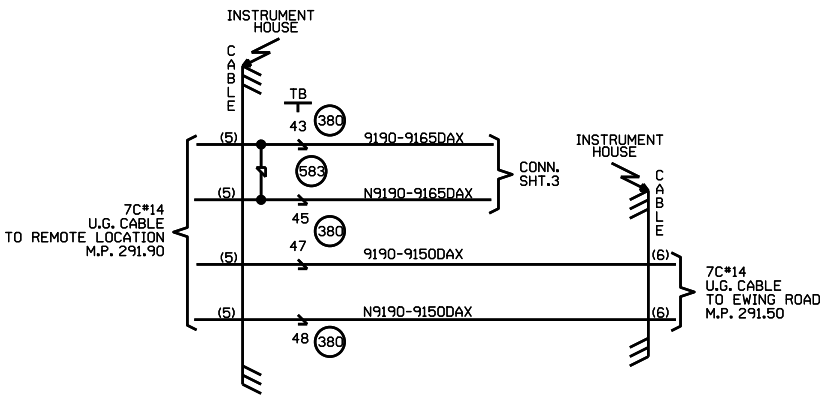

W(S) ⟵⟶ E(N)

CABLE TABULATION

CABLE NO. 5 7C#14 U.G.B.T. HOUSE TO M.P. 291.90
CABLE NO. 6 7C#14 U.G.B.T. HOUSE TO M.P. 291.50

NEW SHEET

Designed: 7/12/10 INSTALL FLASHERS AND GATES WITH CWT AT M.P. 291.65 TR 230A Rec#: WO#: 05341 IS: /RLT /IRG/JTB	MODIFICATION LEVEL		CIRCUIT MODIFICATIONS ARE NOT TO BE MADE WITHOUT AUTHORITY FROM THE OFFICE OF SIGNAL DESIGN	Date: 07/12/10 Des: IRG Chk: RLT AFE: 05341	UNION PACIFIC RAILROAD WHITTINGTON, ILLINOIS TR 230A MT. VERNON SUBDIVISION Office of Sr AVP Engineering - Signal/TCO Omaha, Nebraska	Sh.: 1 DOT 167611D MP: 291.65 ID: 030129165.1X
	Q. A. LAST LEVEL CHECKED	DS				
	LAST LEVEL MOD THIS TYPICAL	DS				
	LAST LEVEL BY DESIGNER	DU				
	CHANGED FROM TYPICAL?	Y				
	mv 09.02.09 4K 1TKBG.1					

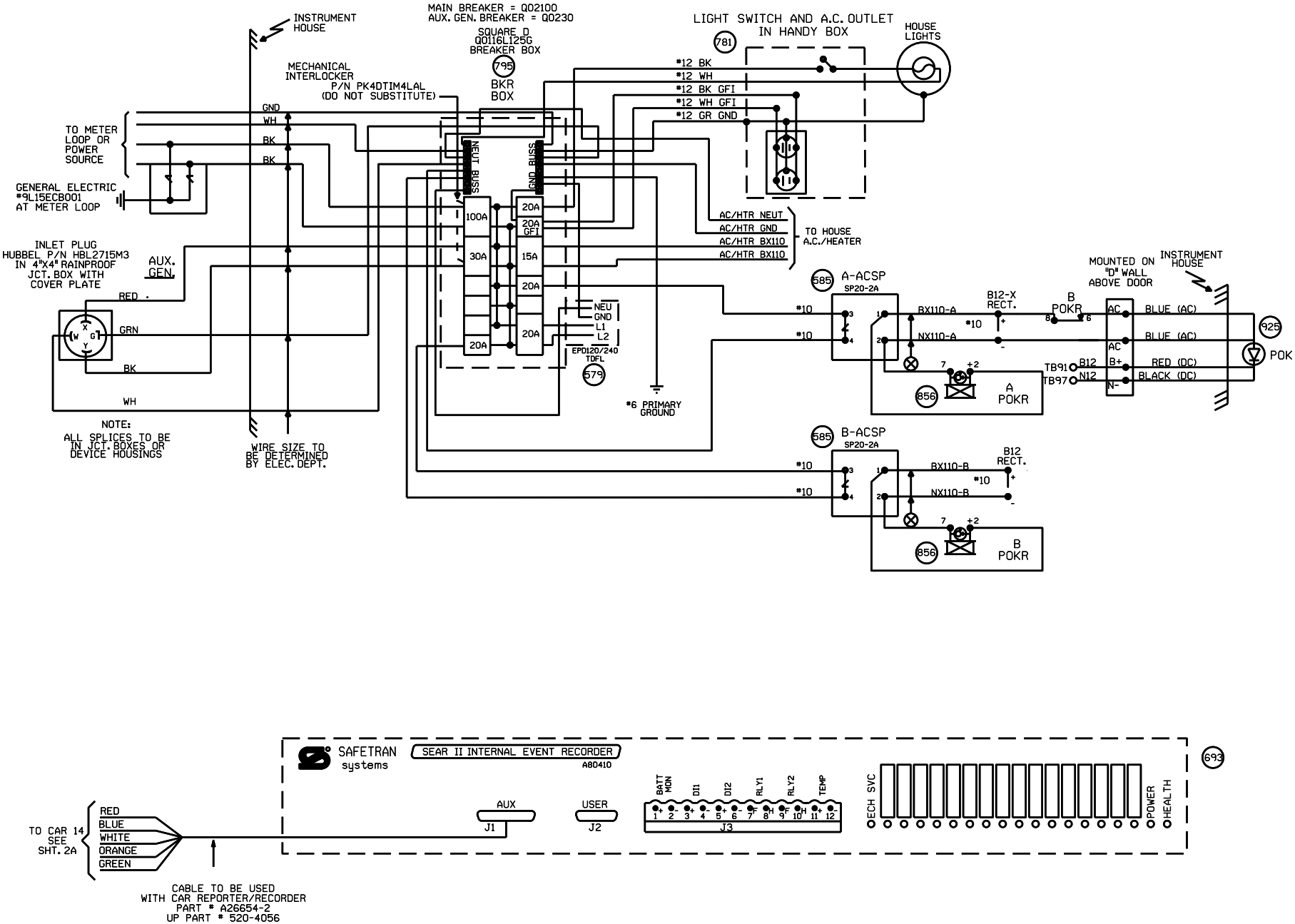

NEW SHEET

Designed: 7/12/10 INSTALL FLASHERS AND GATES WITH CWT AT M.P. 291.65 TR 230A Rec#: WO#: 05341 IS: /RLT /IRG/JTB	MODIFICATION LEVEL		CIRCUIT MODIFICATIONS ARE NOT TO BE MADE WITHOUT AUTHORITY FROM THE OFFICE OF SIGNAL DESIGN	Date: 07/12/10 Des: IRG Chk: RLT AFE: 05341	UNION PACIFIC RAILROAD WHITTINGTON, ILLINOIS TR 230A MT. VERNON SUBDIVISION Office of Sr AVP Engineering - Signal/TCO Omaha, Nebraska	Sh.: 2 DOT 167611D MP: 291.65 ID: 030129165.2X
	Q. A. LAST LEVEL CHECKED	DS				
	LAST LEVEL MOD THIS TYPICAL	DS				
	LAST LEVEL BY DESIGNER	DU				
	CHANGED FROM TYPICAL?	N				
	MV 09.02.09 4K SEARAC.2					

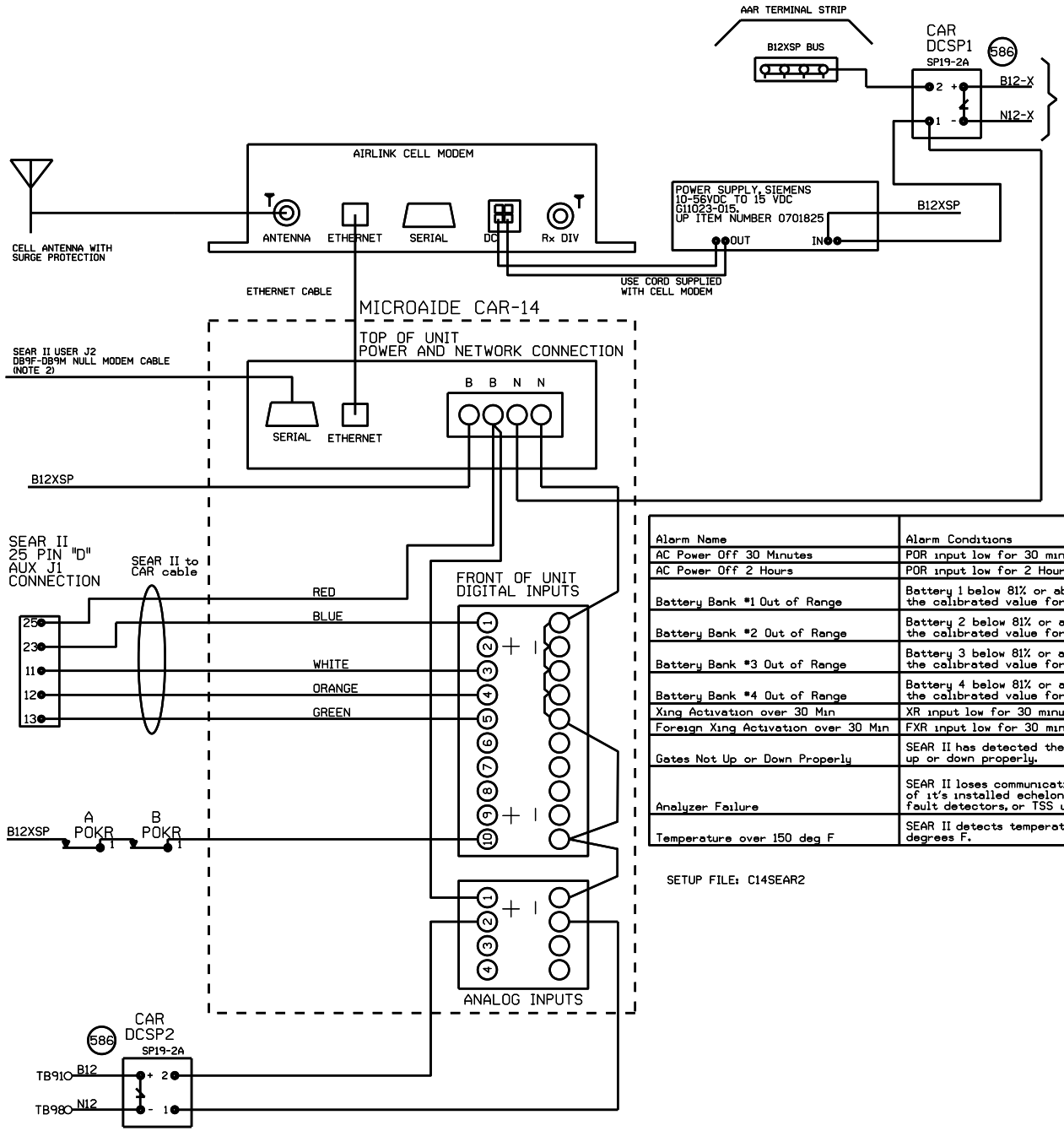

NOTE:
1) DO NOT JUMPER UNUSED INPUTS
2) THE CAR14 SERIAL PORT IS AVAILABLE TO ADD REMOTE CONNECTIVITY TO EXISTING LOGGING EQUIPMENT. USE NULL MODEM CABLE WITH SHIELDING DISCONNECTED AT ONE OR BOTH SIDES.

ANALOG INPUTS:
A1) B12X BATTERY BANK
A2) B12 BATTERY BANK
A3) BATTERY BANK 3
A4) BATTERY BANK 4

DIGITAL INPUTS
D1) XR (BLUE WIRE)
D2) FOREIGN XR
D3) ANALYZER FAILURE (WHITE WIRE)
D4) HIGH TEMPERATURE (ORANGE WIRE)
D5) GATES NOT UP OR DOWN PROPERLY (GREEN WIRE)
D10) POWER OFF INDICATION

Alarm Name	Alarm Conditions	Alarm Clearing Conditions	Cleared by Maintainer Mode?
AC Power Off 30 Minutes	POR input low for 30 minutes.	POR input high for 5 minutes.	No
AC Power Off 2 Hours	POR input low for 2 Hours.	POR input high for 5 minutes.	No
Battery Bank #1 Out of Range	Battery 1 below 81% or above 120% of the calibrated value for 5 minutes.	Battery 1 within acceptable range for 5 minutes.	No
Battery Bank #2 Out of Range	Battery 2 below 81% or above 120% of the calibrated value for 5 minutes.	Battery 2 within acceptable range for 5 minutes.	No
Battery Bank #3 Out of Range	Battery 3 below 81% or above 120% of the calibrated value for 5 minutes.	Battery 3 within acceptable range for 5 minutes.	No
Battery Bank #4 Out of Range	Battery 4 below 81% or above 120% of the calibrated value for 5 minutes.	Battery 4 within acceptable range for 5 minutes.	No
Xing Activation over 30 Min	XR input low for 30 minutes.	XR input high for 10 seconds.	Yes
Foreign Xing Activation over 30 Min	FXR input low for 30 minutes.	FXR input high for 10 seconds.	Yes
Gates Not Up or Down Properly	SEAR II has detected the gates are not up or down properly.	SEAR II has detected the gates are up or down properly.	No
Analyzer Failure	SEAR II loses communications with any of it's installed echelon nodes, ground fault detectors, or TSS units.	SEAR II has recovered after an analyzer failure alarm.	No
Temperature over 150 deg F	SEAR II detects temperature over 150 degrees F.	SEAR II sensor detects temperature is OK after a High-Temp alarm.	No

SETUP FILE: C14SEAR2

NEW SHEET

Designed: 7/12/10
INSTALL FLASHERS AND GATES WITH CWT AT MP. 291.65 TR 230A
Rev: 0
Iss: 1
WO#: 05341
RLT
IRG/JTB
Rev 01.24.11 4K ACDCCAR14SII.3

MODIFICATION LEVEL	
Q. A. LAST LEVEL CHECKED	DU
LAST LEVEL MOD THIS TYPICAL	DU
LAST LEVEL BY DESIGNER	DU
CHANGED FROM TYPICAL?	Y

CIRCUIT MODIFICATIONS ARE NOT TO BE MADE WITHOUT AUTHORITY FROM THE OFFICE OF SIGNAL DESIGN

Date: 07/12/10
Des: IRG
Chk: RLT
AFE: 05341

UNION PACIFIC RAILROAD
WHITTINGTON, ILLINOIS
TR 230A
MT. VERNON SUBDIVISION
Office of Sr AVP Engineering - Signal/TCO Omaha, Nebraska

Sh.: 2a
DOT 167611D
MP: 291.65
ID: 030129165.2ex

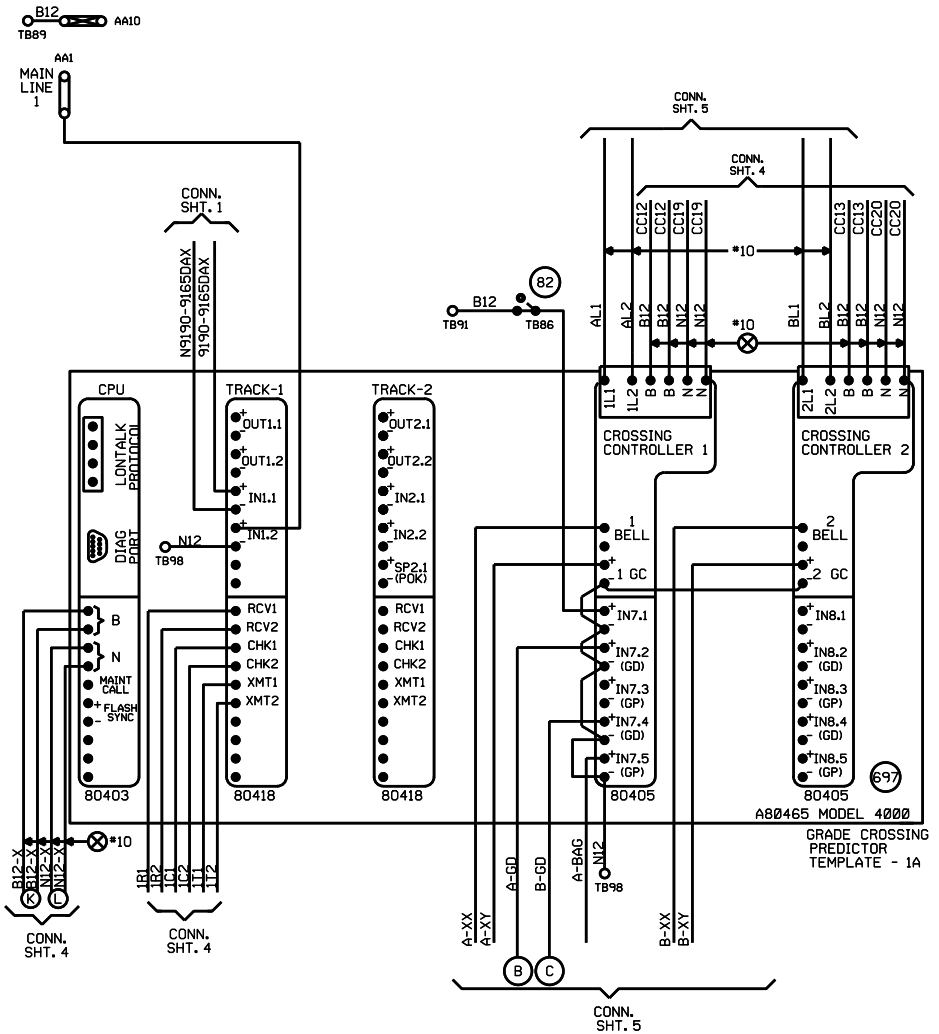

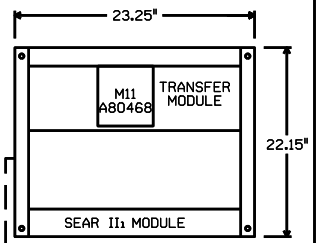

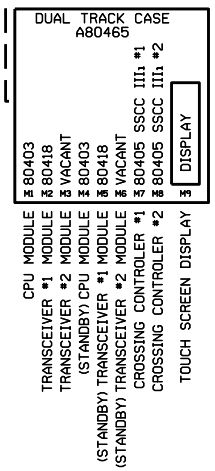

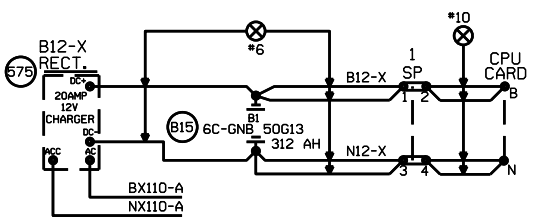

"Mf" FREQUENCY (HZ)	MAXIMUM TRANSMIT WIRE LENGTH (FEET)
86	100
114	125
156	150
211	200
285-970	250

NOTE:
EACH TRANSMITTER TO RAIL WIRE FROM XMT1 AND XMT2 MUST NOT EXCEED THE MAXIMUM LENGTH SPECIFIED IN THE TABLE SHOWN. THE RECEIVER WIRE LENGTH IS NOT CRITICAL. DOES NOT APPLY TO 6 TRACK WIRE APPLICATION.

NEW SHEET

Designed: 7/12/10
INSTALL FLASHERS AND GATES WITH CWT AT M.P. 291.65 TR 230A
Rec#: 15:
WO#: 05341 RLT / IRG / JTB
rev 03.02.09 4K 2TKGF.3

MODIFICATION LEVEL	
Q. A. LAST LEVEL CHECKED	DS
LAST LEVEL MOD THIS TYPICAL	DS
LAST LEVEL BY DESIGNER	DU
CHANGED FROM TYPICAL?	Y

CIRCUIT MODIFICATIONS ARE NOT TO BE MADE WITHOUT AUTHORITY FROM THE OFFICE OF SIGNAL DESIGN

Date: 07/12/10
Des: IRG
Chk: RLT
AFE: 05341

UNION PACIFIC RAILROAD
WHITTINGTON, ILLINOIS
TR 230A
MT. VERNON SUBDIVISION
Office of Sr AVP Engineering - Signal/TCO Omaha, Nebraska

Sh.: 3
DOT 167611D
MP: 291.65
ID: 030129165.3X

Minimum Program Steps Report

Location and SIN

DOT Number: 167611D
Milepost Number: 291.65
Site Name: WHITTINGTON, IL

SIN: 762010010016 *

* Parameter is part of office check number calculation.

MCF and Template Selection

MCF Name: GCP-T6X-02-4.mcf
MCF Revision: 24
MCFCRC: 09FC363B

Template = 1A:6 Trk B1 (OCCN) *

* Parameter is part of office check number calculation.

Minimum Program Steps

TEMPLATE: track 1-B1, Island
Track 1 : GCP Frequency = 114 Hz (Field,TCN)
Track 1 : Approach Distance = 3081 ft (Set in Field,TCN)
Track 1 : Prime Warning Time = 25 sec (OCCN) *
Track 1 : Prime UAX = IP (OCCN) *
Track 1 : Prime UAX Pickup = 15 sec (OCCN) *
Track 1 : GCP Transmit Level = Medium (Set in Field,TCN)
Track 1 : Isl Frequency = 13.2 kHz (Set in Field)

TEMPLATE: AND 1 XR
AND 1 Enable Used = Yes (OCCN) *

TEMPLATE: SSCC
SSCC 1 : Lamp Neutral Test = Off (Set in Field)
SSCC 2 : Lamp Neutral Test = Off (Set in Field)

TEMPLATE: OOS
OOS Control = OOS IPs (OCCN) *

TEMPLATE: IP assignment 1
IN 1.1 = T1 Prime UAX (OCCN) *
IN 1.2 = Out Of Service IP 1 (OCCN) *

TEMPLATE: IP assignment SSCC
IN 7.1 = AND 1 XR Enable (OCCN) *

GCP: track 1
Track 1 : Island Distance = 121 ft (Set in Field,TCN)

ISLAND: track 1
Track 1 : Pickup Delay (2s +) = 2 sec (OCCN) *

ADVANCED: site options
Daylight Savings = Off (Set in Field)

* Parameter is part of office check number calculation.

Check Numbers

Office Check Number: 6BE5E952
Config. Check Number: 3EDF6FF1
(Based on MCF Revision 24)

Parameters not part of office check number calculation:

Track 1 : GCP Frequency = 114 Hz
Track 1 : Approach Distance = 3081 ft (Set in Field)
Track 1 : GCP Transmit Level = Medium (Set in Field)
Track 1 : Isl Frequency = 13.2 kHz
SSCC 1 : Lamp Neutral Test = Off (Set in Field)
SSCC 2 : Lamp Neutral Test = Off (Set in Field)
Track 1 : Island Distance = 121 ft (Set in Field)
Daylight Savings = Off (Set in Field)

Comments

<none>

Configuration Package File

Filename: 030129165_167611D.pac
Path: C:\GCP4000 Programming\Union Pacific\05341\TR230A\
Date/Time: 8/14/2013 16:33:22

NEW SHEET

Designed: 7/12/10
INSTALL FLASHERS AND GATES WITH CWT AT MLP. 291.65 TR 230A
Rec#: ISs: WO#: 05341 /RLT / /IRG/JTB

NOTE: Actual OFFSET and ISLAND distances must be verified by field personnel.

CIRCUIT MODIFICATIONS ARE NOT TO BE MADE WITHOUT AUTHORITY FROM THE OFFICE OF SIGNAL DESIGN

Date:	07/12/10
Des:	IRG
Chk:	RLT
AFE:	05341

UNION PACIFIC RAILROAD
WHITTINGTON, ILLINOIS
TR 230A
MT. VERNON SUBDIVISION
Office of Sr AVP Engineering - Signal/TCO Omaha, Nebraska

Sh.:	3A
DOT	167611D
MP:	291.65
ID:	030129165.3AX

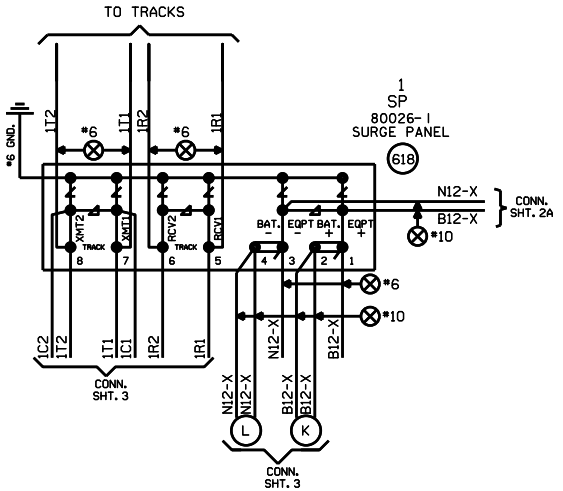

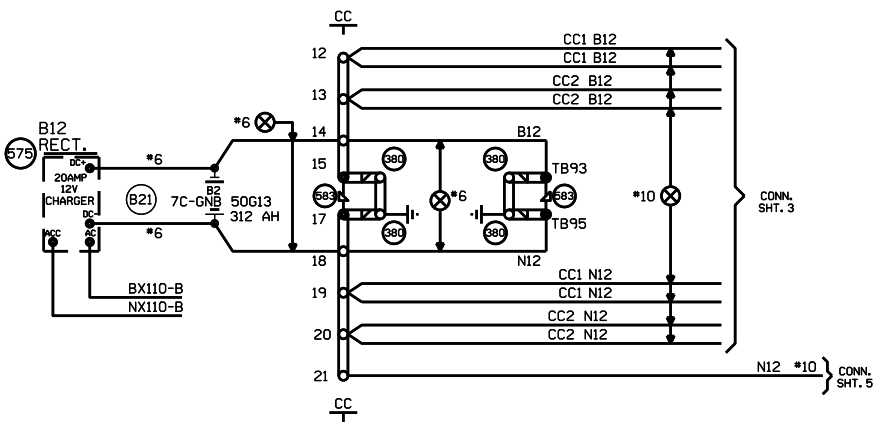

NEW SHEET

Designed: 7/12/10 INSTALL FLASHERS AND GATES WITH CWT AT M.P. 291.65 TR 230A Rec#: WO#: 05341 IS: /RLT / /IRG/JTB	MODIFICATION LEVEL		CIRCUIT MODIFICATIONS ARE NOT TO BE MADE WITHOUT AUTHORITY FROM THE OFFICE OF SIGNAL DESIGN	Date: 07/12/10 Des: IRG Chk: RLT AFE: 05341	UNION PACIFIC RAILROAD WHITTINGTON, ILLINOIS TR 230A MT. VERNON SUBDIVISION Office of Sr AVP Engineering - Signal/TCO Omaha, Nebraska	Sh.: 4 DOT 167611D MP: 291.65 ID: 030129165.4X
	Q. A. LAST LEVEL CHECKED	DS				
	LAST LEVEL MOD THIS TYPICAL	DS				
	LAST LEVEL BY DESIGNER	DU				
	CHANGED FROM TYPICAL?	Y				
	MV 09.02.09 4K 4TKSPGFC.4					

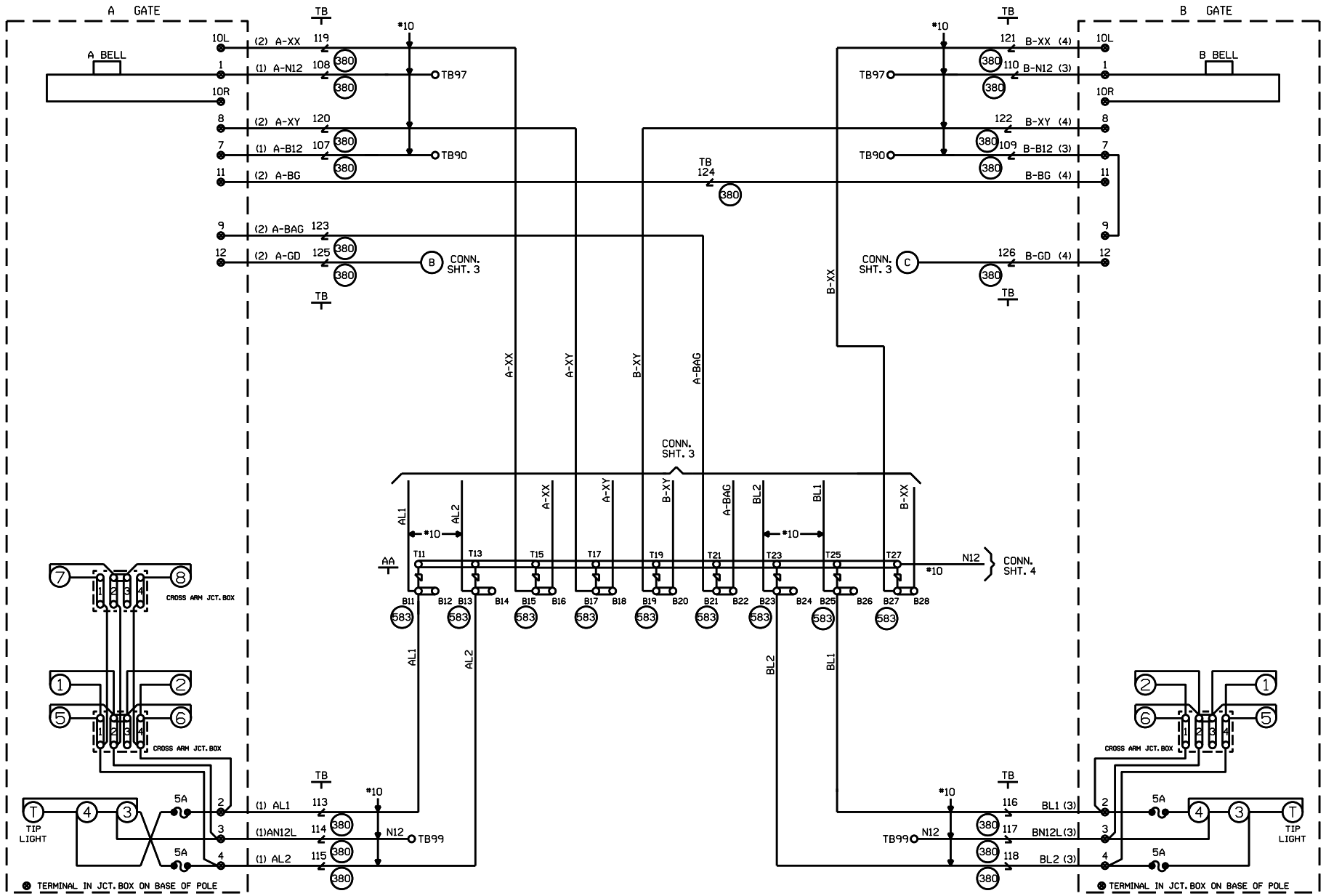

CABLE TABULATION

CABLE NO. 1 5C. NO.6 U.G.B.T. TO GATE A
CABLE NO. 2 7C. NO.14 U.G.B.T. TO GATE A
CABLE NO. 3 5C. NO.6 U.G.B.T. TO GATE B
CABLE NO. 4 7C. NO.14 U.G.B.T. TO GATE B

NEW SHEET

Designed: 7/12/10
INSTALL FLASHERS AND GATES WITH CWT AT M.P. 291.65 TR 230A
Rec#: WO#: 05341
IS: /RLT /IRG/JTB

MODIFICATION LEVEL	
Q. A. LAST LEVEL CHECKED	DS
LAST LEVEL MOD THIS TYPICAL	DS
LAST LEVEL BY DESIGNER	DU
CHANGED FROM TYPICAL?	Y

mv 09.02.09 4K GFSLTYP.5

CIRCUIT MODIFICATIONS ARE NOT TO BE MADE WITHOUT AUTHORITY FROM THE OFFICE OF SIGNAL DESIGN

Date: 07/12/10
Des: IRG
Chk: RLT
AFE: 05341

UNION PACIFIC RAILROAD
WHITTINGTON, ILLINOIS
TR 230A
MT. VERNON SUBDIVISION
Office of Sr AVP Engineering - Signal/TCO Omaha, Nebraska

Sh.: 5
DOT 167611D
MP: 291.65
ID: 030129165.5X

WCH 3593-E

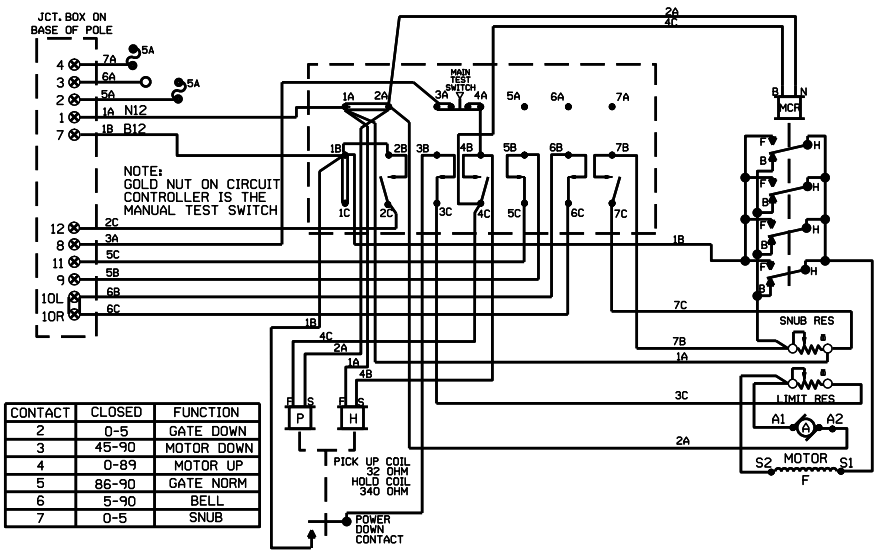

CONTACT	CLOSED	FUNCTION
2	0-5	GATE DOWN
3	45-90	MOTOR DOWN
4	0-89	MOTOR UP
5	86-90	GATE NORM
6	5-90	BELL
7	0-5	SNUB

WCH 3597-E

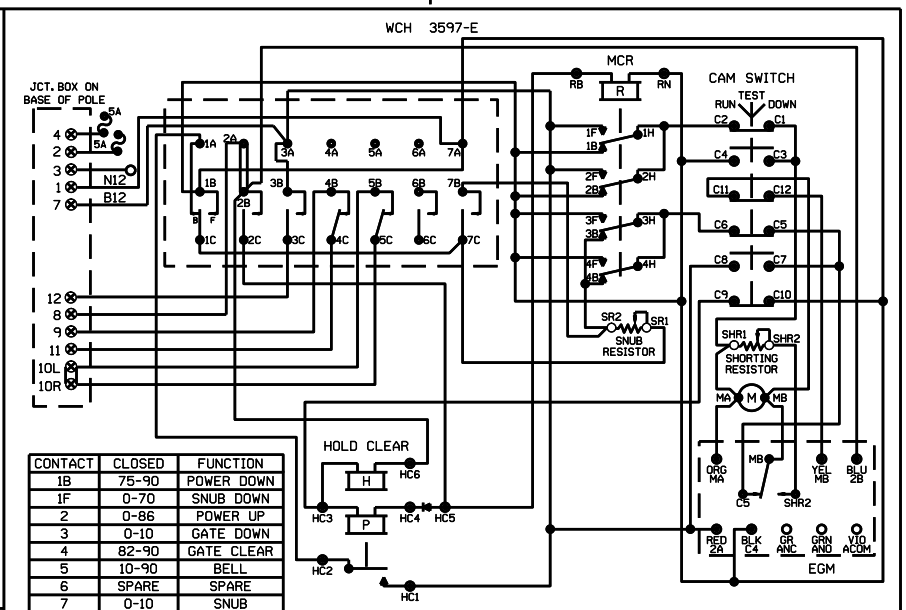

CONTACT	CLOSED	FUNCTION
1B	75-90	POWER DOWN
1F	0-70	SNUB DOWN
2	0-86	POWER UP
3	0-10	GATE DOWN
4	82-90	GATE CLEAR
5	10-90	BELL
6	SPARE	SPARE
7	0-10	SNUB

WCH 3597-RB

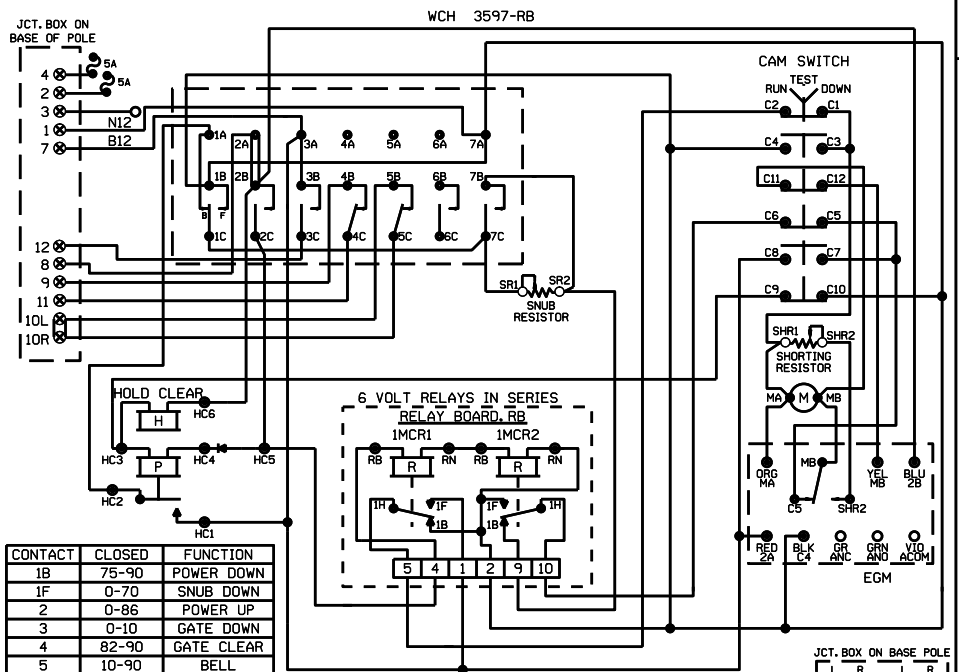

CONTACT	CLOSED	FUNCTION
1B	75-90	POWER DOWN
1F	0-70	SNUB DOWN
2	0-86	POWER UP
3	0-10	GATE DOWN
4	82-90	GATE CLEAR
5	10-90	BELL
6	SPARE	SPARE
7	0-10	SNUB

SHOW TYPE MECH. INSTALLED

ALL MECHANISMS SHOWN IN THE CLEAR POSITION

JCT. BOX ON BASE POLE

SAFETRAN S-60

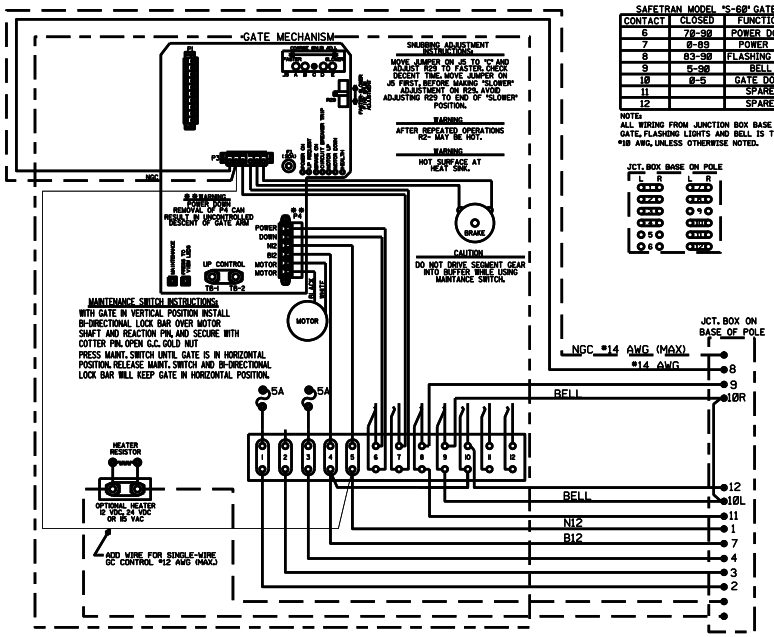

SAFETRAN MODEL "S-60" GATE

CONTACT	CLOSED	FUNCTION
6	70-90	POWER DOWN
7	0-89	POWER UP
8	83-90	FLASHING LGT.
9	5-90	BELL
10	0-5	GATE DOWN
11		SPARE
12		SPARE

NOTE:
ALL WIRING FROM JUNCTION BOX BASE TO GATE, FLASHING LIGHTS AND BELL IS TO BE #10 AWG, UNLESS OTHERWISE NOTED.

JCT. BOX BASE ON POLE

NEW SHEET

Designed: 7/12/10
INSTALL FLASHERS AND GATES WITH CWT AT M.P. 291.65 TR 230A
Rec#: WO#: 05341
IS: /RLT /IRG/JTB

MODIFICATION LEVEL	
Q.A. LAST LEVEL CHECKED	DS
LAST LEVEL MOD THIS TYPICAL	DS
LAST LEVEL BY DESIGNER	DU
CHANGED FROM TYPICAL?	N

mv 09.02.09 4K GWIRING.7

CIRCUIT MODIFICATIONS ARE NOT TO BE MADE WITHOUT AUTHORITY FROM THE OFFICE OF SIGNAL DESIGN

Date: 07/12/10
Des: IRG
Chk: RLT
AFE: 05341

UNION PACIFIC RAILROAD
WHITTINGTON, ILLINOIS
TR 230A
MT. VERNON SUBDIVISION
Office of Sr AVP Engineering - Signal/TCO Omaha, Nebraska

Sh.: 6
DOT 167611D
MP: 291.65
ID: 030129165.6X

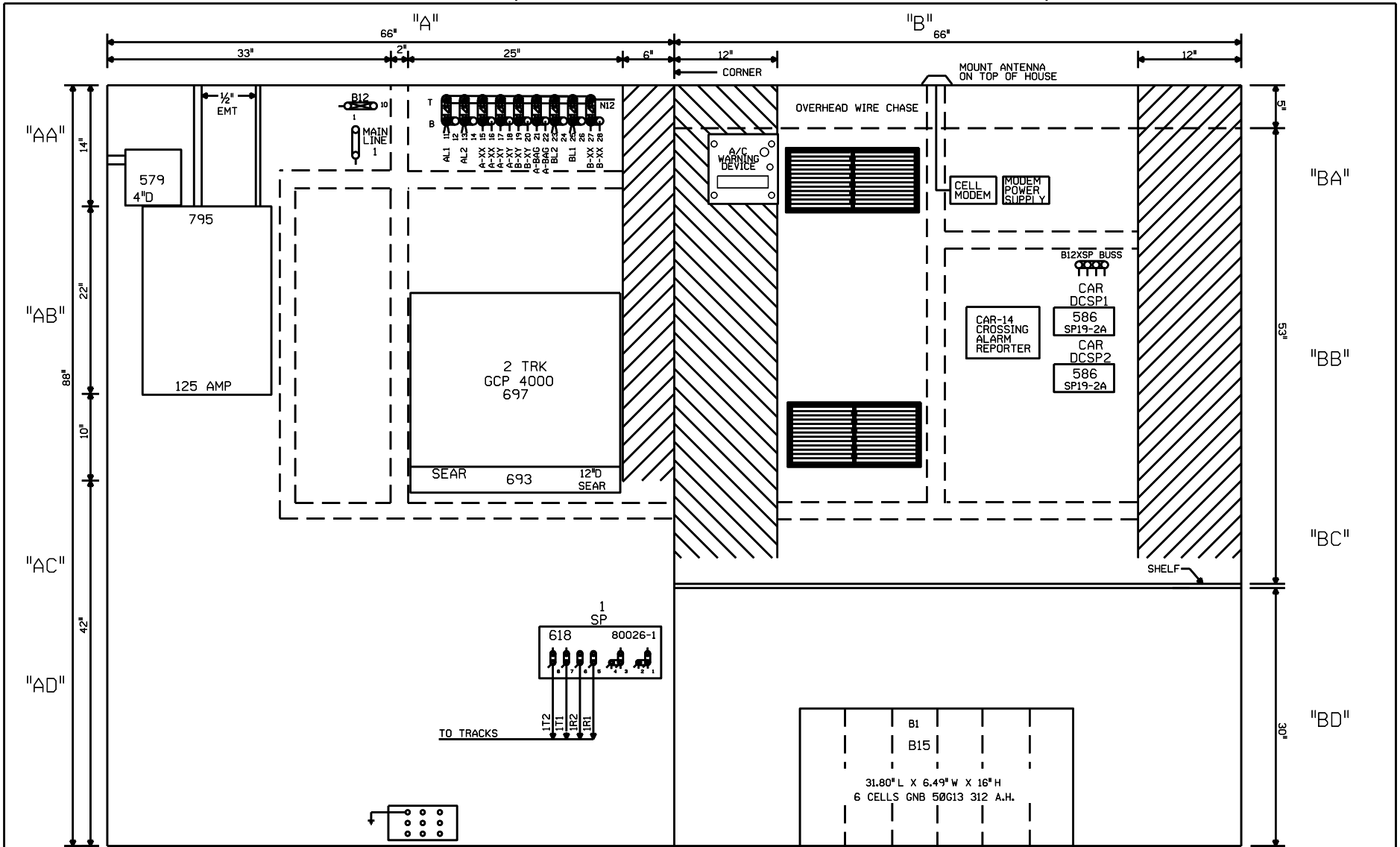

NOTE: ALL DIMENSIONS SHOWN ARE APPROXIMATE.

NEW SHEET

					Designed: 7/12/10 INSTALL FLASHERS AND GATES WITH CWT AT M.P. 291.65 TR 230A Rec#: IS: WO#: 05341 /RLT / /IRG/JTB	MODIFICATION LEVEL Q. A. LAST LEVEL CHECKED DS LAST LEVEL MOD THIS TYPICAL DS LAST LEVEL BY DESIGNER DU CHANGED FROM TYPICAL? Y REV 09.02.09 4K 4TKGFC.8	CIRCUIT MODIFICATIONS ARE NOT TO BE MADE WITHOUT AUTHORITY FROM THE OFFICE OF SIGNAL DESIGN	Date: 07/12/10 Des: IRG Chk: RLT AFE: 05341	UNION PACIFIC RAILROAD WHITTINGTON, ILLINOIS TR 230A MT. VERNON SUBDIVISION Office of Sr AVP Engineering - Signal/TCO Omaha, Nebraska	Sh.: 7 DOT 167611D MP: 291.65 ID: 030129165.7X

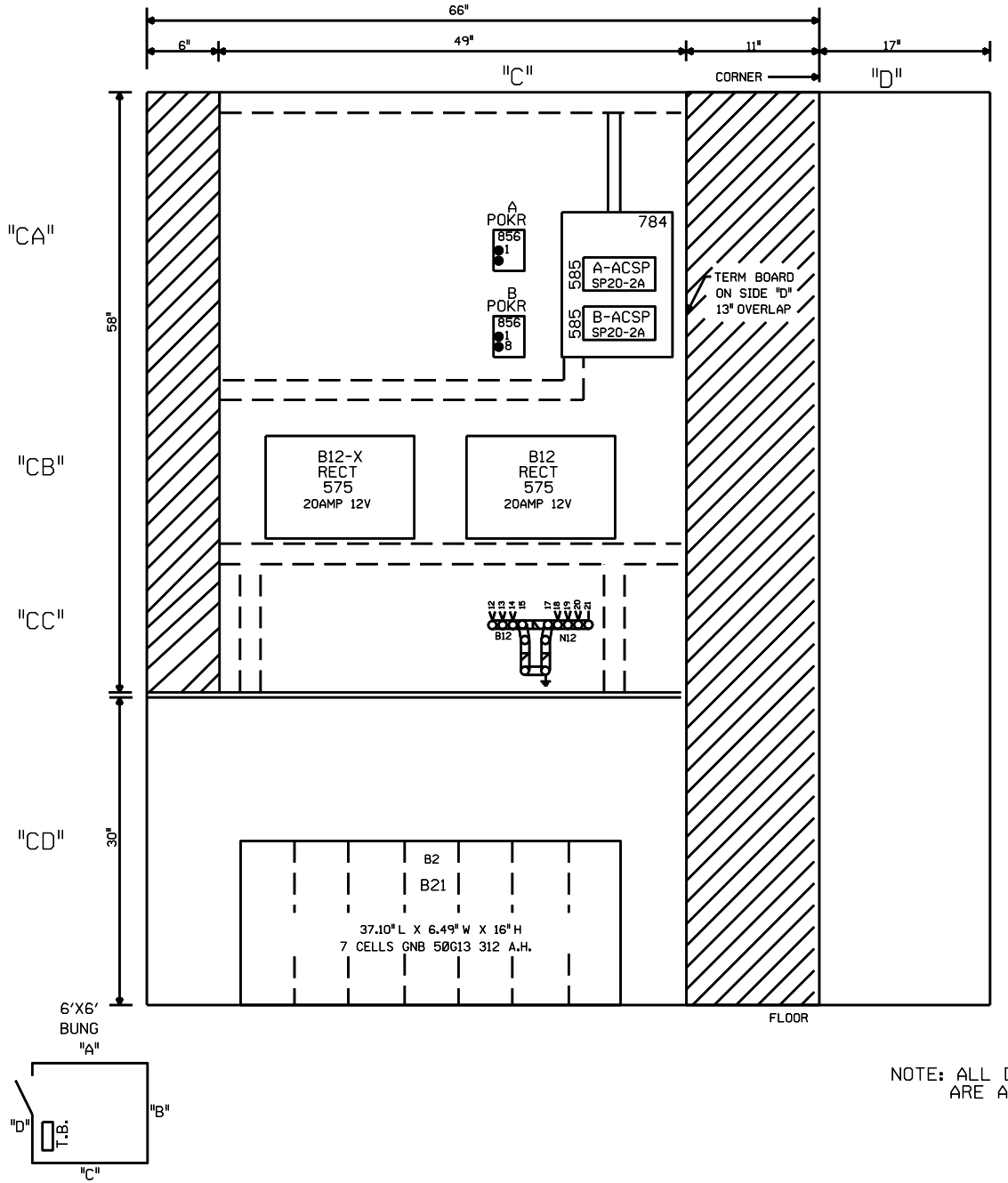

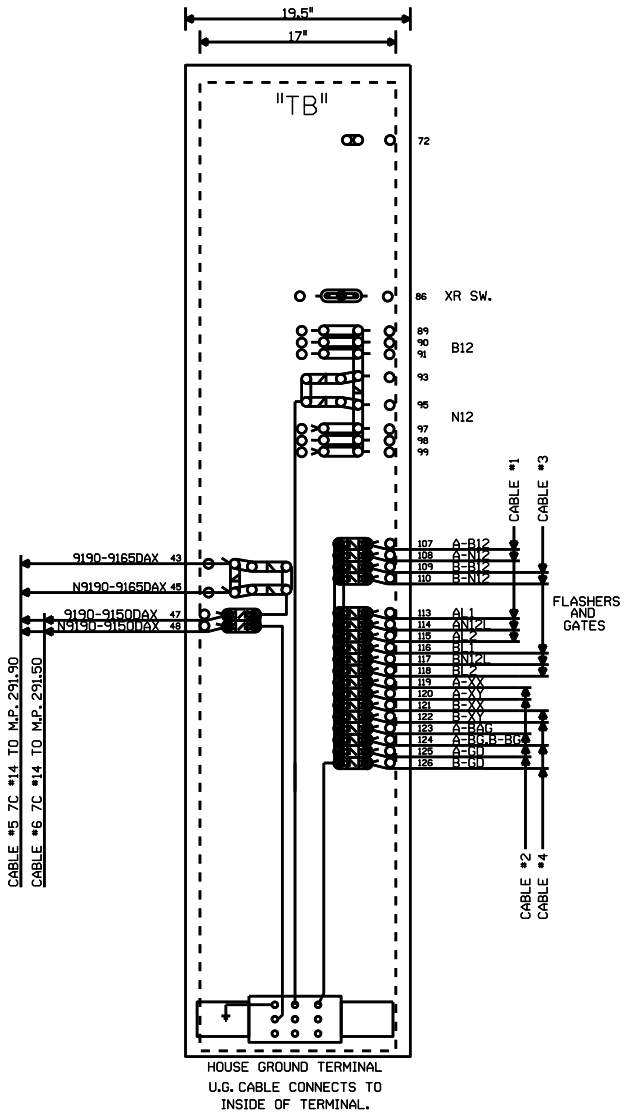

NOTE: ALL DIMENSIONS SHOWN
ARE APPROXIMATE.

NEW SHEET

Designed: 7/12/10 INSTALL FLASHERS AND GATES WITH CWT AT M.P. 291.65 TR 230A Rec#: WO#: 05341 IS: /RLT / /IRG/JTB	MODIFICATION LEVEL		CIRCUIT MODIFICATIONS ARE NOT TO BE MADE WITHOUT AUTHORITY FROM THE OFFICE OF SIGNAL DESIGN	Date: 07/12/10 Des: IRG Chk: RLT AFE: 05341	UNION PACIFIC RAILROAD WHITTINGTON, ILLINOIS TR 230A MT. VERNON SUBDIVISION Office of Sr AVP Engineering - Signal/TCO Omaha, Nebraska	Sh.: 8 DOT 167611D MP: 291.65 ID: 030129165.8X
	Q. A. LAST LEVEL CHECKED	DS				
	LAST LEVEL MOD THIS TYPICAL	DS				
	LAST LEVEL BY DESIGNER	DU				
	CHANGED FROM TYPICAL?	Y				
	REV 09.02.09 4K GFC.9					