INDEX

CONTENTS

SH. NO.	CONTENTS	1	2	3	4	5	6	7	8	9
I01	TITLE, NOTES, INDEX AND REVISIONS	X	X	X	X	⊘	⊠			
I02	TITLE, NOTES, INDEX AND REVISIONS	X	X	X		⊘	⊠			
S01	TRACK AND SIGNAL PLAN	X		X		⊘	⊠			
S02	TRACK AND SIGNAL PLAN	X		X		⊘	⊠			
G01	VHLC I/O EQUIVALENT CIRCUITS (LOCATION A)	X		X						
G02	OFFICE CONTROL AND INDICATION EQUIVALENT CIRCUITS (LOCATION A)	X	X	X						
G03	VHLC I/O EQUIVALENT CIRCUITS (LOCATION B)	X								
E01	POWER DISTRIBUTION (LOCATION A)	X	X	X						
E02	POWER DISTRIBUTION (LOCATION A)	X				⊘				
E03	RACK 1 LAYOUT (LOCATION A)	X	X		X					
E04	CLCP I/O CARD (LOCATION A)	X								
E05	POWER DISTRIBUTION (LOCATION B)	X				⊘	⊠			
E06	POWER DISTRIBUTION (LOCATION B)	X				⊘				
E06	POWER DISTRIBUTION (LOCATION B)						⊠			
E07	RACK 1 LAYOUT (LOCATION B)	X								
E08	POWER DISTRIBUTION					⊘				
E09	ELECTROLOGIXS MODULE XP4 CONFIGURATION					⊘				
E10	POWER DISTRIBUTION					⊘				
E11	ELECTROLOGIXS MODULE XP4 CONFIGURATION					⊘				
E12	ACCESS POINT INET-II 900 RADIO DETAILS					⊘				
E13	ACCESS POINT INET-II 900 RADIO DETAILS (19CWU)						⊠			
C01	VHLC CIRCUITS (LOCATION A)	X	X							
C02	VHLC I/O CIRCUITS (LOCATION A)	X								
C03	VHLC INPUT CIRCUITS (LOCATION A)	X	X	X						
C04	SIGNAL LIGHTING CIRCUITS (LOCATION A)	X								
C05	SIGNAL LIGHTING CIRCUITS (LOCATION A)	X								
C06	SIGNAL LIGHTING CIRCUITS (LOCATION A)	X								
C07	SWITCH CIRCUITS (LOCATION A)	X		X						
C08	SWITCH CIRCUITS (LOCATION A)	X		X						
C09	WAGO TERMINAL BOARDS (LOCATION A)	X	X	X						
C10	PTC VHLC CHECKSUMS (LOCATION A)	X	X		X					

REVISION NO.

⊘ = DESIGN COMPLETED

X = REVISION COMPLETED

REVISIONS

REV. NO.	PROJECT NO.	DESIGN DATE	IN SERVICE DATE	REVISION DATE
1	IL2006016	05-15-08	08-15-11	09-28-11
2	IL2006016A	03-18-10	08-15-11	09-28-11
3	IL2006016B	06-09-10	08-15-11	09-28-11
4	IL2006016C	05-26-11	08-15-11	09-28-11
5	IL2011037	08-25-12	-----	-----
6	IL2011037A	01-29-13	-----	-----

⊖⊖⊖ = IN

✕✕✕ = OUT

PORTION OF MARK-UP
DATED 08-25-12

THIS PLAN ☐ DOES ☒ DOES NOT
SUPERSEDES PLANS DATED,

IL2011037 / 08-25-12

⊟⊟⊟ = IN

✕✕✕ = OUT

GE TRANSPORTATION
INTELLIGENT CONTROL SYSTEMS
Jacksonville, Florida
CSX PROJ #,IL2011037A DATE,01-29-13
DESIGNED BY,SAT CHECKED BY,DPL

CSX TRANSPORTATION
RAIL TRANSPORT GROUP ENGINEERING
COMMUNICATIONS AND SIGNALS

CP FRANCISCO

TITLE, NOTES, INDEX & REVISIONS
BLUE ISLAND, IL M.P. DIH-15.40

DESIGNED	DIGITIZED	CHECKED	DATE
SWE/RGH	SWE/WMG	SWE	05-15-08

DESIGN DATE	REV. NO.	DRAWING	SHEET NO	FILE	SHEET
05-26-11	4 5 6	-----	-----	DIH01540	I01

01-29-13
08-25-12

INDEX

SH. NO.	CONTENTS	REVISION NO. 1	2	3	4	5	6	7	8	9
C11	CUSTOM LOCAL CONTROL PANEL LAYOUT (LOCATION A)	X		X						
C12	CUSTOM LOCAL CONTROL PANEL CIRCUITS (LOCATION A)	X								
C13	CUSTOM LOCAL CONTROL PANEL CIRCUITS (LOCATION A)	X								
C14	CUSTOM LOCAL CONTROL PANEL CIRCUITS (LOCATION A)	X								
C15	CUSTOM LOCAL CONTROL PANEL CIRCUITS (LOCATION A)	X		X						
C16	VHLC CIRCUITS (LOCATION B)	X								
C17	VHLC I/O CIRCUITS (LOCATION B)	X								
C18	VHLC I/O CIRCUITS (LOCATION B)	X								
C19	VHLC INPUT CIRCUITS (LOCATION B)	X					☐			
C20	SIGNAL LIGHTING CIRCUITS (LOCATION B)	X								
C21	SIGNAL LIGHTING CIRCUITS (LOCATION B)	X								
C22	SIGNAL LIGHTING CIRCUITS (LOCATION B)	X								
C23	SWITCH CIRCUITS (LOCATION B)	X		X						
C24	SWITCH CIRCUITS (LOCATION B)	X								
C25	SWITCH CIRCUITS (LOCATION B)	X								
C26	SWITCH CIRCUITS (LOCATION B)	X								
C27	WAGO TERMINAL BOARDS (LOCATION B)	X								
C28	VHLC CHECKSUMS (LOCATION B)	X								
C29	VHLC FACE PLACE (LOCATION B)	X								
C30	WCM CIRCUITS (LOCATION A)		X							
C31	10CWU-1 ELECTROLOGIXS XP4 CIRCUITS					⊘	☐			
C32	XP4 10CWU-2 MODULE SETUP INFORMATION					⊘	☐			
C33	XP4 MODULE CONNECTOR USAGE					⊘	☐			
C34	ELECTROLOGIXS CIRCUITS					⊘				
C35	XP4 10CWU-2 MODULE SETUP INFORMATION					⊘	☐			
C36	XP4 MODULE CONNECTOR USAGE					⊘	☐			

⊘ = DESIGN COMPLETED

☒ = REVISION COMPLETED

REVISIONS

REV. NO.	PROJECT NO.	DESIGN DATE	IN SERVICE DATE	REVISION DATE
1	IL2006016	05-15-08	08-15-11	09-28-11
2	IL2006016A	03-18-10	08-15-11	09-28-11
3	IL2006016B	06-09-10	08-15-11	09-28-11
5	IL2011037	08-25-12	-----	-----
6	IL2011037A	01-29-13	-----	-----

⊖⊖⊖ = IN
✕✕✕ = OUT

PORTION OF MARK-UP
DATED 08-25-12

THIS PLAN ☐ DOES ☒ DOES NOT SUPERSEDES PLANS DATED,

IL2011037 / 08-25-12

⊟⊟⊟ = IN
✱✱✱ = OUT

GE TRANSPORTATION
INTELLIGENT CONTROL SYSTEMS
Jacksonville, Florida
CSX PROJ #,IL2011037A DATE,01-29-13
DESIGNED BY,SAT CHECKED BY,DPL

CSX TRANSPORTATION
RAIL TRANSPORT GROUP ENGINEERING
COMMUNICATIONS AND SIGNALS

CP FRANCISCO

TITLE, NOTES, INDEX & REVISIONS
BLUE ISLAND, IL M.P. DIH-15.40

DESIGNED	DIGITIZED	CHECKED	DATE
SWE/RGH	SWE/WMG	SWE	05-15-08

DRAWING	SHEET NO	FILE	SHEET
-----	-----	DIH01540	I02

01-29-13
08-25-12

DESIGN DATE	REV. NO.
06-09-10	3 5 6

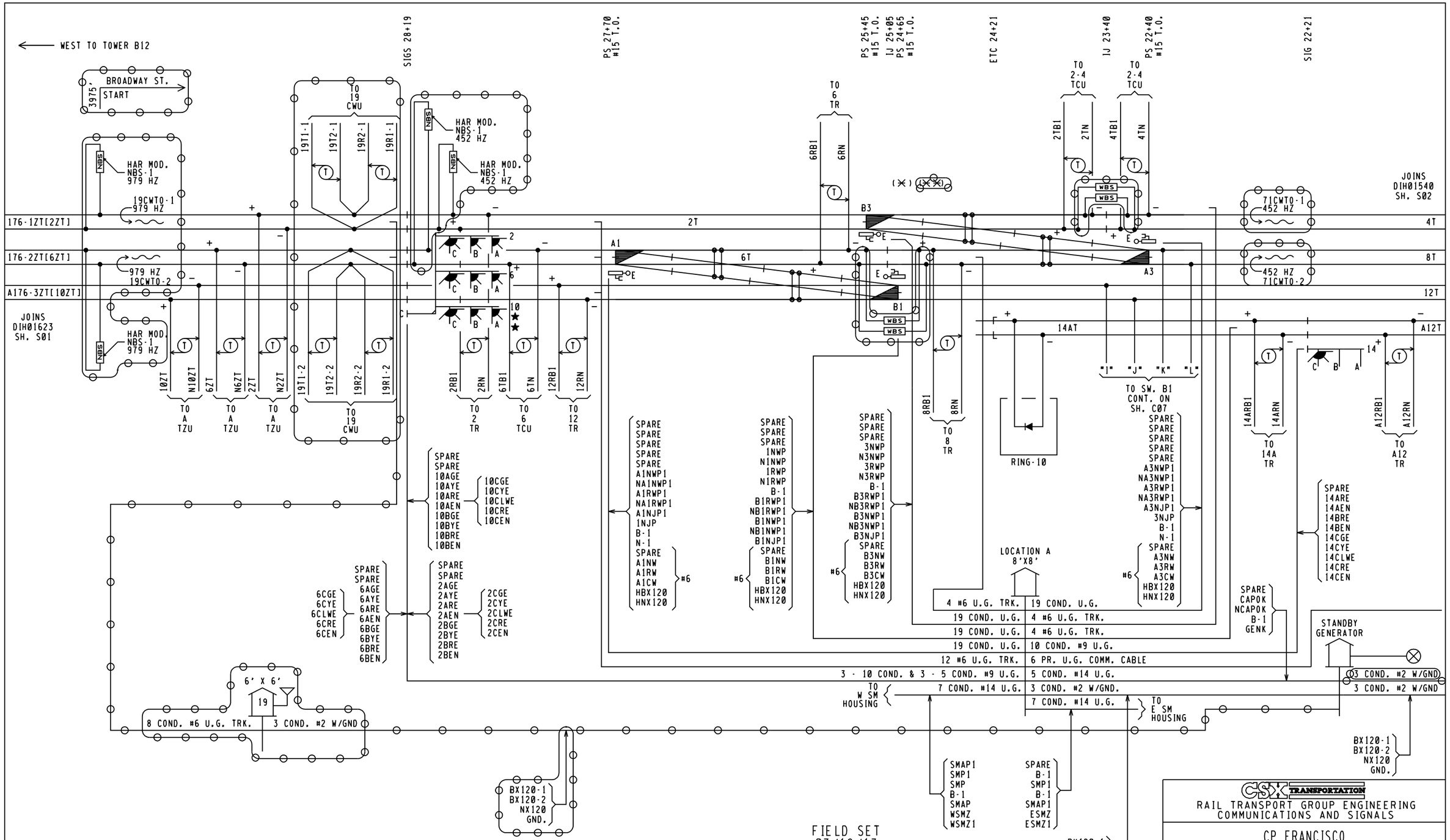

NOTES:

1. (✕) = LOCATION OF HOUSE
2. [ ] = TAGGING PURPOSES ONLY
3. FLASHING ASPECTS ARE NOT SHOWN ON S01. SHOWN ONLY ON ASPECT CHART AND PROFILE

★ = 10AGE AND 10AYE WIRED FOR FUTURE USE BUT NOT IN-SERVICE

= I.J. DEPICTION FOR CADD PURPOSES ONLY. ACTUAL PLACEMENT INDICATED BY STATION NUMBERS

(✕✕) = LOCATION OF 19 REMOTE CROSSING HOUSE

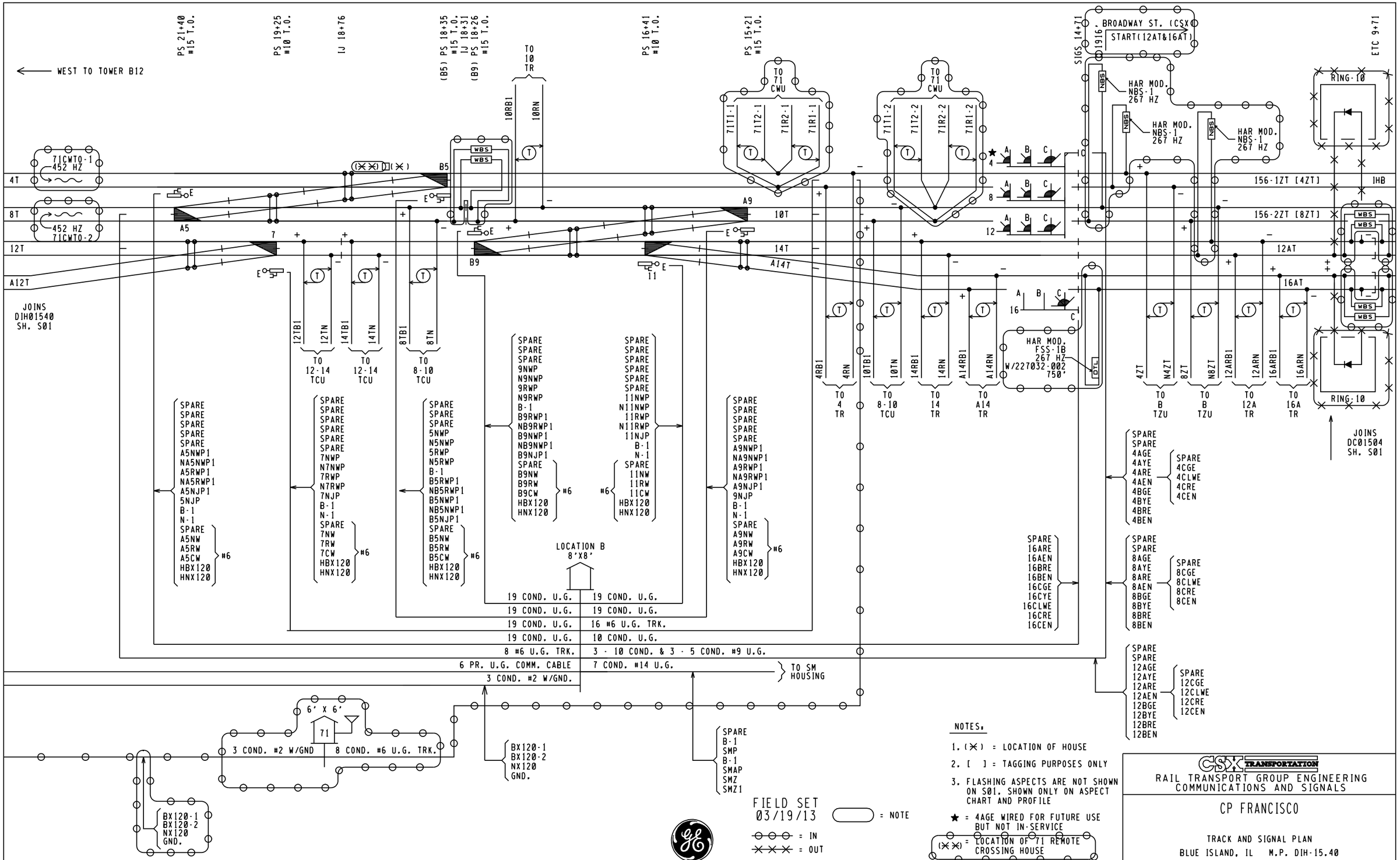

NOTES:

1. (✕) = LOCATION OF HOUSE
2. [ ] = TAGGING PURPOSES ONLY
3. FLASHING ASPECTS ARE NOT SHOWN ON S01. SHOWN ONLY ON ASPECT CHART AND PROFILE

★ = 4AGE WIRED FOR FUTURE USE BUT NOT IN-SERVICE

(✕✕) = LOCATION OF 71 REMOTE CROSSING HOUSE

FIELD SET 03/19/13

= NOTE

= IN

= OUT

GE TRANSPORTATION
INTELLIGENT CONTROL SYSTEMS
Jacksonville, Florida
CSX PROJ #, IL2011037A DATE, 01-29-13
DESIGNED BY, SAT CHECKED BY, DPL

CSX TRANSPORTATION
RAIL TRANSPORT GROUP ENGINEERING
COMMUNICATIONS AND SIGNALS

CP FRANCISCO

TRACK AND SIGNAL PLAN
BLUE ISLAND, IL M.P. DIH-15.40

DESIGNED	DIGITIZED	CHECKED	DATE
SWE/RGH	SWE/JHS	SWE	05-23-08

DESIGN DATE	REV. NO.	DRAWING	SHEET NO	FILE	SHEET
06-09-10	3	-----	-----	DIH01540	S02

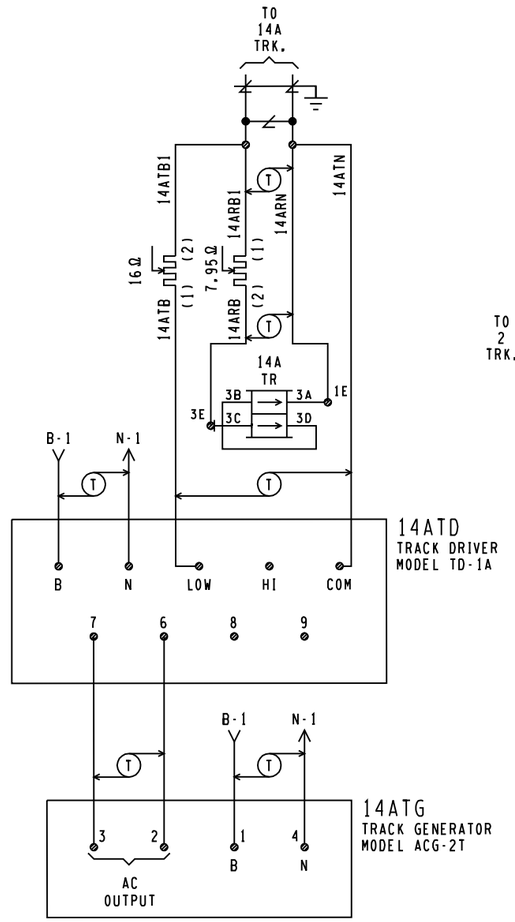

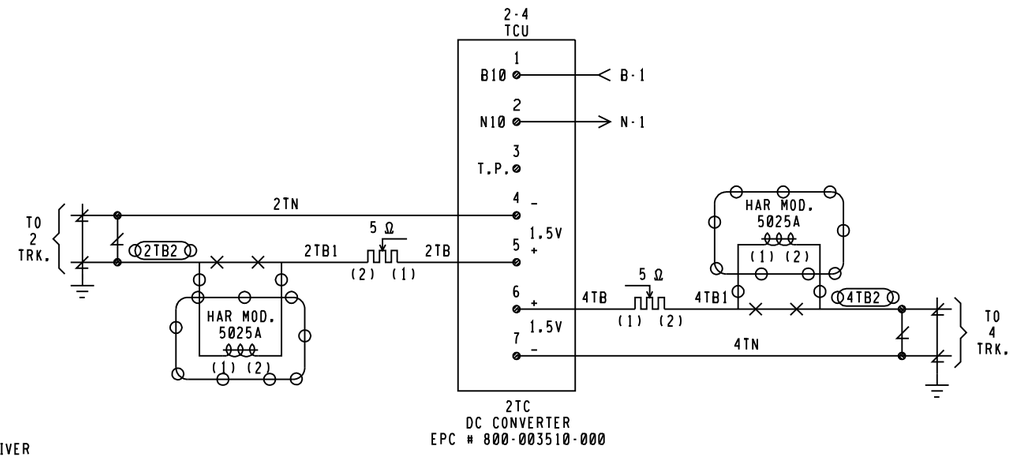

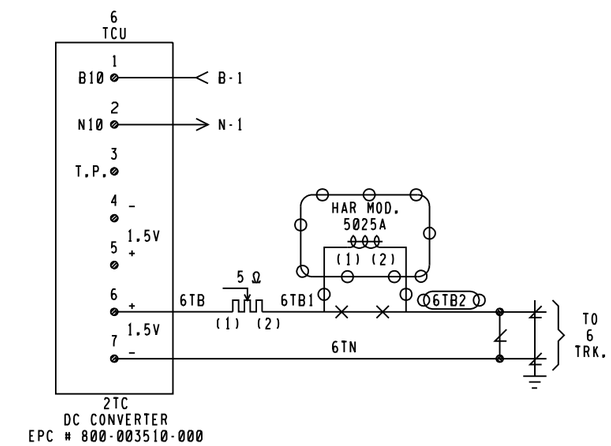

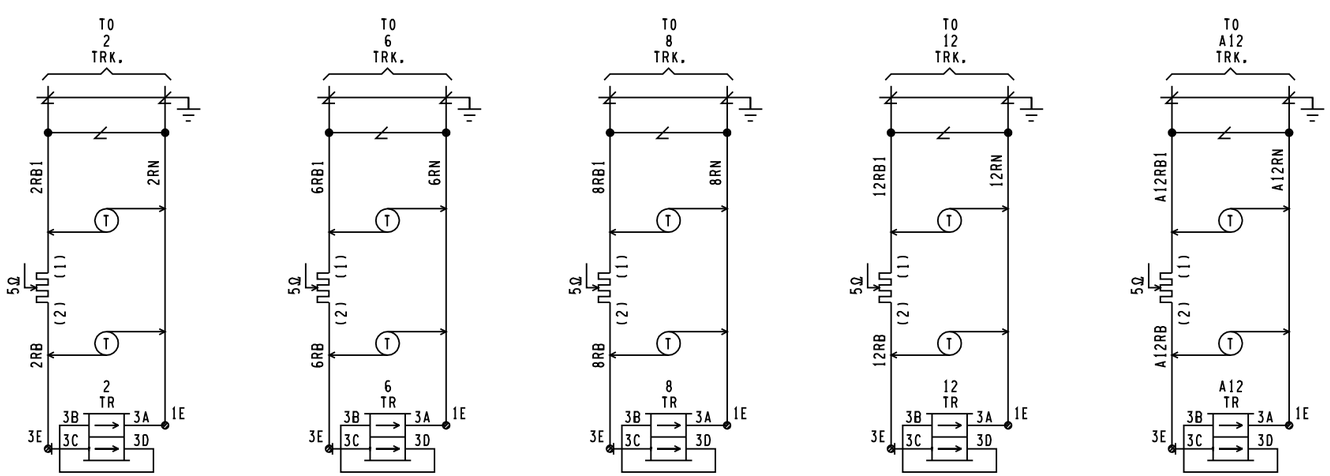

FIELD SET
03/19/13
⊖⊖⊖ : IN
⊗⊗⊗ : OUT

GE TRANSPORTATION
INTELLIGENT CONTROL SYSTEMS
Jacksonville, Florida
CSX PROJ #,IL2011037A DATE,01-29-13
DESIGNED BY,SAT CHECKED BY,DPL

8'X 8' RELAY HOUSE - LOCATION A

CSX TRANSPORTATION
RAIL TRANSPORT GROUP ENGINEERING
COMMUNICATIONS AND SIGNALS

CP FRANCISCO

POWER DISTRIBUTION
BLUE ISLAND, IL M.P. DIH-15.40

DESIGNED	DIGITIZED	CHECKED	DATE
SWE/RGH	SWE/WMG	SWE	05-15-08

DESIGN DATE	REV. NO.	DRAWING	SHEET NO	FILE	SHEET
05-15-08	1	-----	-----	DIH01540	E02

(✕) = SUPPLIED WITH VHLC RACK

VITAL HARMON LOGIC CONTROLLER RACK

ROW A

5NWR	5RWR	7NWR	7RWR	9NWR	9RWR	11NWR	11RWR	10VSTOP	11VSTOP	12VSTOP
13 B	13 B	13 B	13 B	13 B	13 B	13 B	13 B	12 F	12 F	12 F
14 F	14 F	14 F	14 F	14 F	14 F	14 F	14 F	15 FB	15 FB	15 FB
33 B	33 B	33 B	33 B	33 B	33 B	33 B	33 B	22 F	22 F	22 F
34 F	34 F	34 F	34 F	34 F	34 F	34 F	34 F	25 F	25 F	25 F
								32		32 FB
								35		35
B45 C30	B45 C30	B45 C30	B45 C30	B45 C30	B45 C30	B45 C30	B45 C30	B77 C30	B77 C30	B77 C30

BPOKR	SMR
9 F 11	9 F 11
10 12	10 12
N68 C48	N41 C48

WALL MOUNTED

ROW B

4TR	10TR	14TR	A14TR	12ATR	16ATR					(✕) SMPR
12	12	12	12	12 B	12 B					9 F 11
15	15	15	15	15 B	15 B					10 12
22	22	22	22	22	22					N41 C48 C49
23 F	23 F	23 F	23 F	23 F	23 F					
25 F	25 F	25 F	25 F	25 F	25 F					
32	32	32	32	32	32					
35	35	35	35	35	35					
B51 C30	B51 C30	B51 C30	B51 C30	B1 B51 C30	B51 B1 C30					

(✕) SMAPR
9 B 11
10 12
N41 C48

REDRAWN ON SH. E06

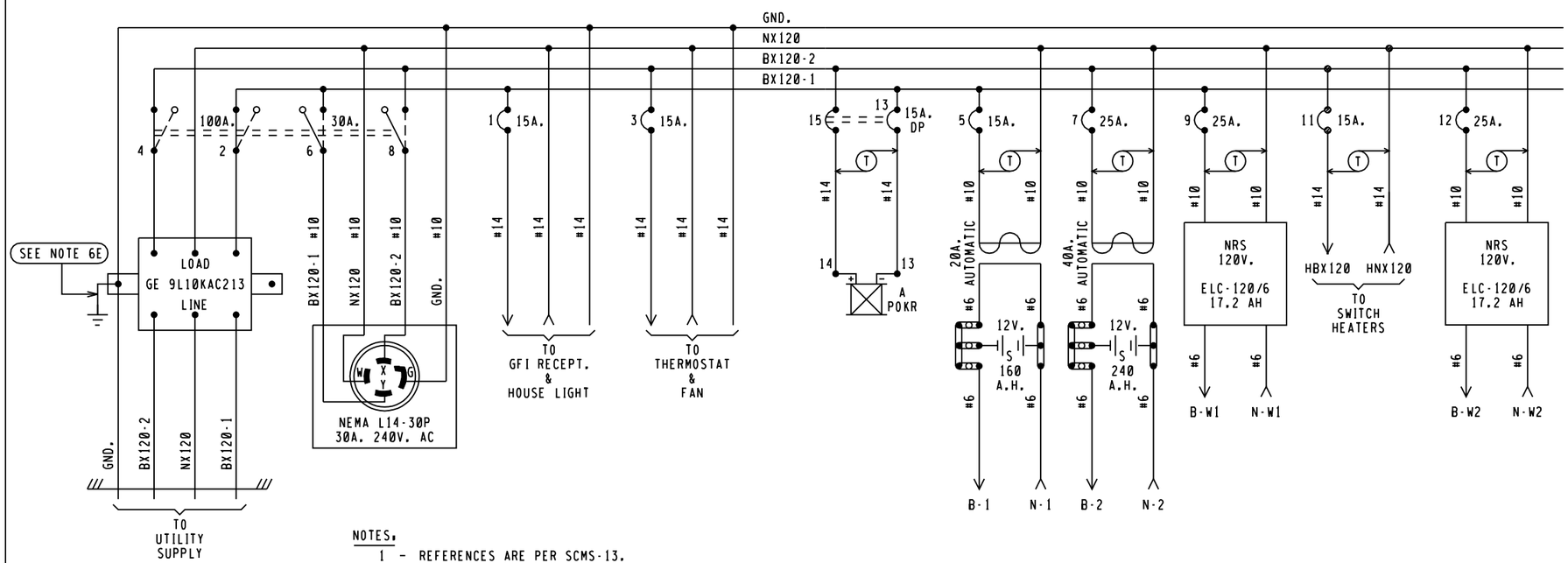

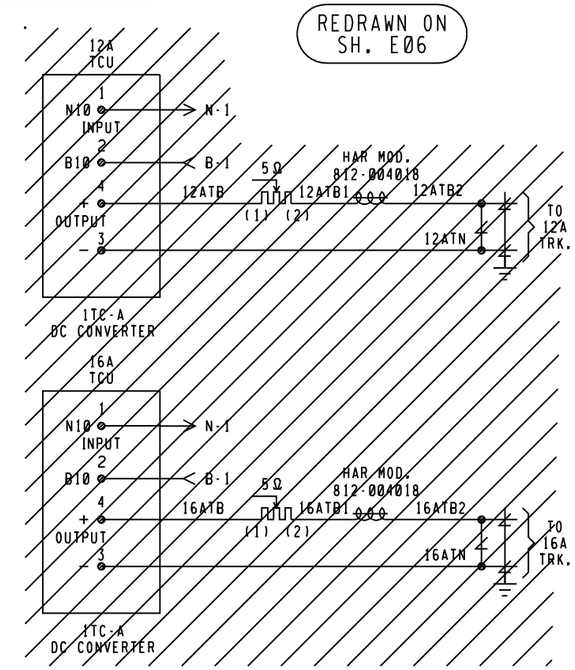

BX120-1	BX120-2
23.5 AMPS	29.5 AMPS

MAXIMUM LOAD CALCULATED PER SS360

NOTES.

1 - REFERENCES ARE PER SCMS-13.
2 - ARRESTERS ARE PER SS382.
3 - SHELF RELAY PLACEMENT ON CONSIST CHART HAS NO SIGNIFICANCE.
4 - PLUG-IN RELAYS ARE VIEWED FROM THE FRONT OF RACK.
5 - BATTERY A.H. CAPACITY SHOWN IS THE MINIMUM REQUIREMENT.
6 - WIRING
  A - FEED TO ALL BUSSES, LIGHT CIRCUITS, MOTOR CIRCUITS TO BE #10 FLEX.
  B - 120-VOLT FEED FROM ENTRANCE TO POWER BUSS TO BE #10 FLEX.
  C - ALL TRACK WIRES TO BE #10 FLEX.
  D - ALL OTHERS TO BE #16 FLEX UNLESS NOTED.
  E - GROUND WIRE NOT NECESSARY WHEN GE ARRESTER IS MOUNTED ON GROUND PLANE OR METAL ENCLOSURE AFFIXED DIRECTLY TO BUNGALOW METALLIC STRUCTURAL MEMBER.
7 - CIRCUIT INTERRUPTERS 2 & 4 ARE MECHANICALLY INTERLOCKED WITH CIRCUIT INTERRUPTERS 6 & 8.

FIELD SET
03/19/13

⊖⊖⊖ = IN
✕✕✕ = OUT

GE TRANSPORTATION
INTELLIGENT CONTROL SYSTEMS
Jacksonville, Florida
CSX PROJ #, IL2011037A DATE, 01-29-13
DESIGNED BY, SAT CHECKED BY, DPL

8'X 8' RELAY HOUSE - LOCATION B

CSX TRANSPORTATION
RAIL TRANSPORT GROUP ENGINEERING
COMMUNICATIONS AND SIGNALS

CP FRANCISCO

POWER DISTRIBUTION
BLUE ISLAND, IL M.P. DIH-15.40

DESIGNED	DIGITIZED	CHECKED	DATE
SWE/RGH	SWE/WMG	SWE	05-15-08

DESIGN DATE	REV. NO.	DRAWING	SHEET NO	FILE	SHEET
05-15-08	1	-----	-----	DIH01540	E05

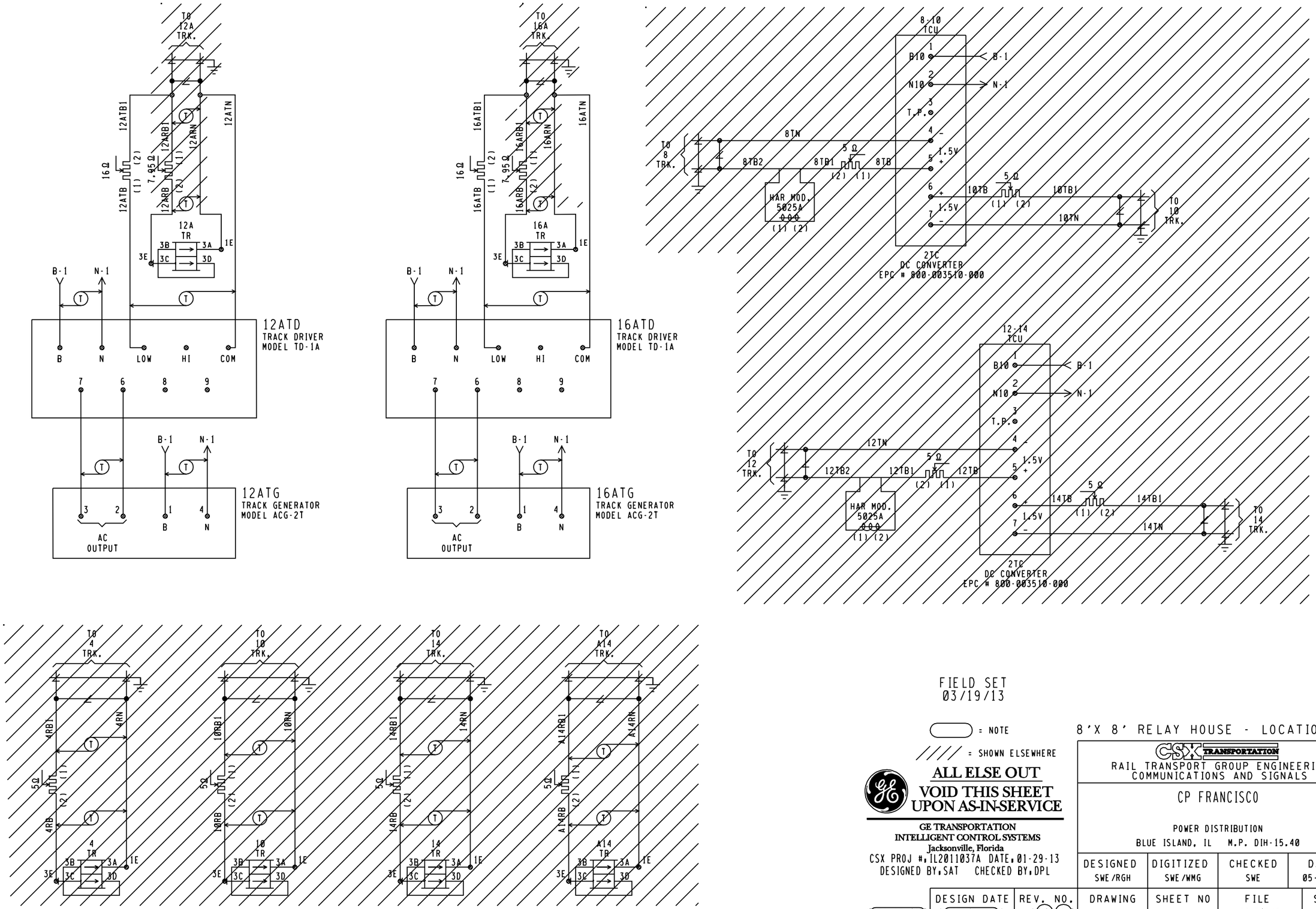

FIELD SET
03/19/13

= NOTE

= SHOWN ELSEWHERE

ALL ELSE OUT
VOID THIS SHEET UPON AS-IN-SERVICE

GE TRANSPORTATION
INTELLIGENT CONTROL SYSTEMS
Jacksonville, Florida
CSX PROJ #, IL2011037A DATE, 01-29-13
DESIGNED BY, SAT CHECKED BY, DPL

8'X 8' RELAY HOUSE - LOCATION B

CSX TRANSPORTATION
RAIL TRANSPORT GROUP ENGINEERING
COMMUNICATIONS AND SIGNALS

CP FRANCISCO

POWER DISTRIBUTION
BLUE ISLAND, IL M.P. DIH-15.40

DESIGNED	DIGITIZED	CHECKED	DATE
SWE/RGH	SWE/WMG	SWE	05-15-08

08-25-12	DESIGN DATE	REV. NO.	DRAWING	SHEET NO	FILE	SHEET
	05-15-08	1 5	-----	-----	DIH01540	E06

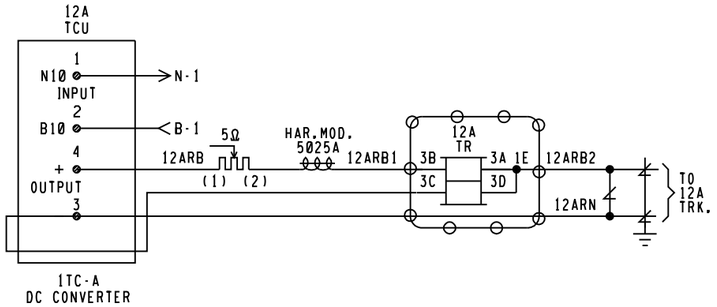

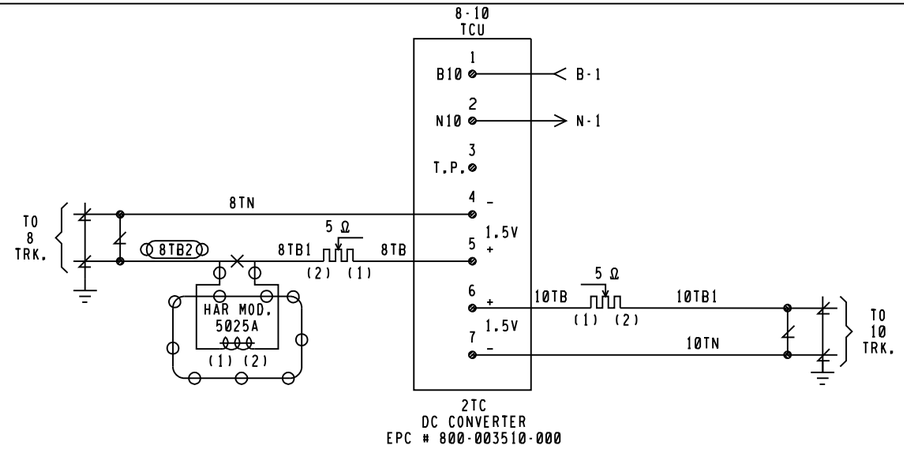

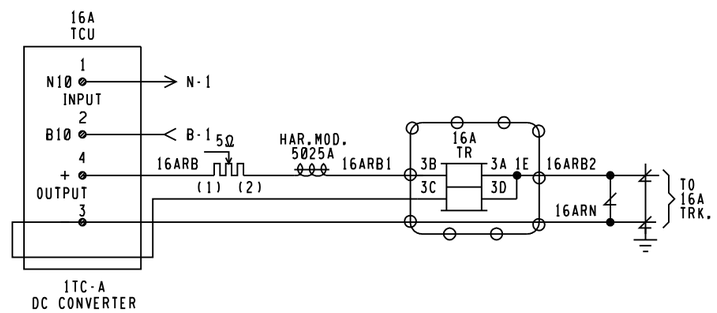

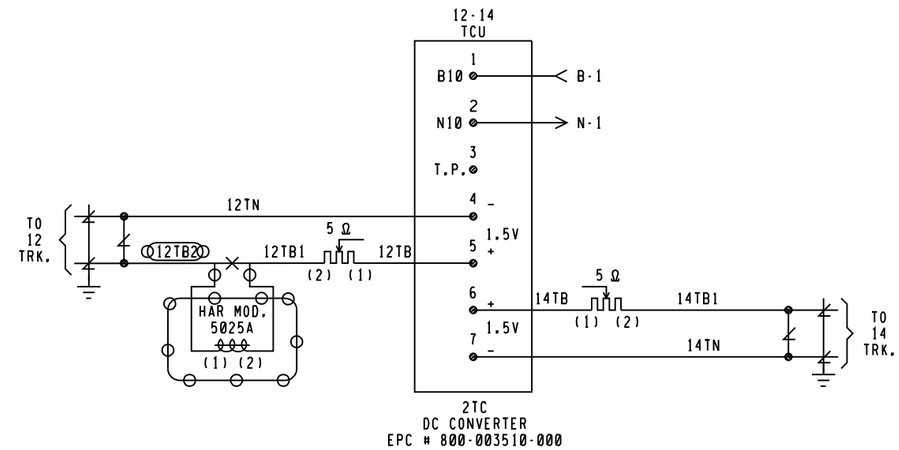

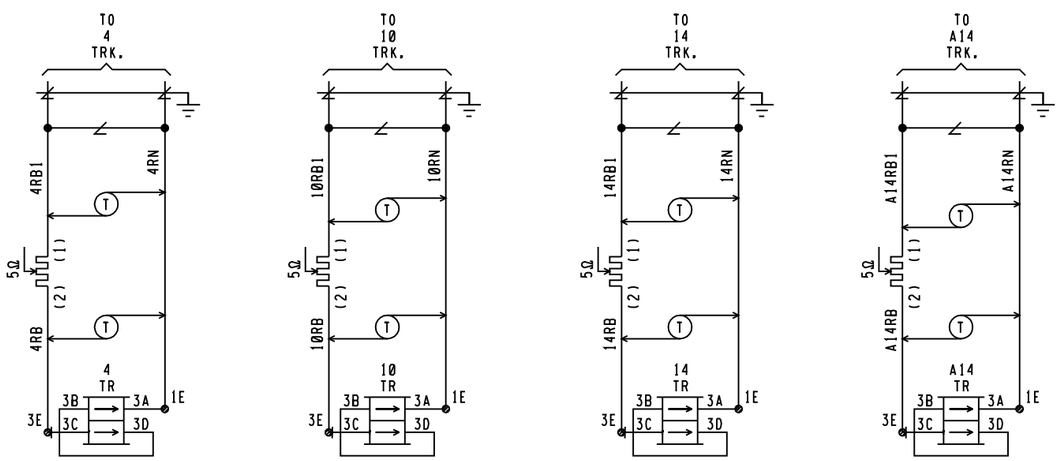

FIELD SET
03/19/13

= NOTE
= IN
= OUT

NEW SHEET

GE TRANSPORTATION
INTELLIGENT CONTROL SYSTEMS
Jacksonville, Florida
CSX PROJ #, IL2011037A DATE, 01-29-13
DESIGNED BY, SAT CHECKED BY, DPL

8'X 8' RELAY HOUSE - LOCATION B

CSX TRANSPORTATION
RAIL TRANSPORT GROUP ENGINEERING
COMMUNICATIONS AND SIGNALS

CP FRANCISCO

POWER DISTRIBUTION
BLUE ISLAND, IL M.P. DIH-15.40

DESIGNED	DIGITIZED	CHECKED	DATE
GET/SAT	GET/SAT	GET/DPL	01-29-13

DESIGN DATE	REV. NO.	DRAWING	SHEET NO	FILE	SHEET
01-29-13	6	-----	-----	DIH01540	E06 X X

TOP ROW

POKR			
9	F	11	N68
10		12	C48

WALL MOUNTED

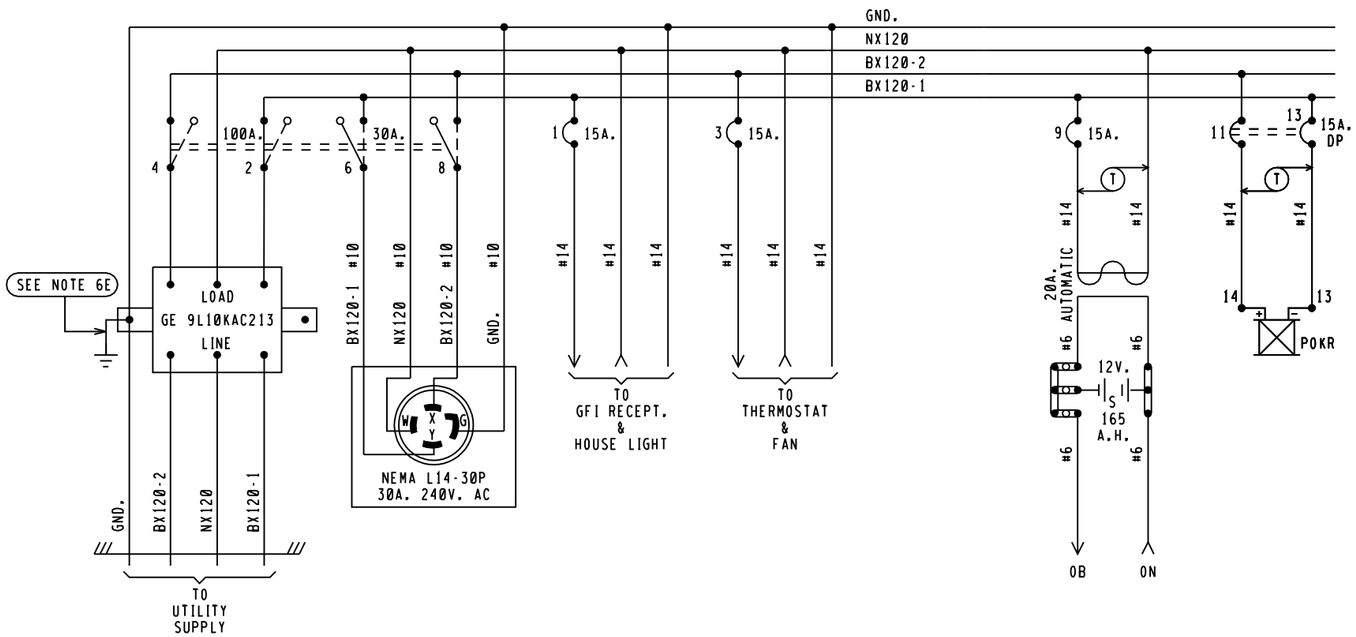

BX120-1	BX120-2
10.0 AMPS	2.0 AMPS

MAXIMUM LOAD
CALCULATED PER SS360

NOTES:

1 - REFERENCES ARE PER SCMS-13.
2 - ARRESTERS ARE PER SS382.
3 - SHELF RELAY PLACEMENT ON CONSIST CHART HAS NO SIGNIFICANCE.
4 - PLUG-IN RELAYS ARE VIEWED FROM THE FRONT OF RACK.
5 - BATTERY A.H. CAPACITY SHOWN IS THE MINIMUM REQUIREMENT.
6 - WIRING
  A - FEED TO ALL BUSSES, LIGHT CIRCUITS,MOTOR CIRCUITS TO BE #10 FLEX.
  B - 120-VOLT FEED FROM ENTRANCE TO POWER BUSS TO BE #10 FLEX.
  C - ALL TRACK WIRES TO BE #10 FLEX.
  D - ALL OTHERS TO BE #16 FLEX UNLESS NOTED.
  E - GROUND WIRE NOT NECESSARY WHEN GE ARRESTER IS MOUNTED ON GROUND PLANE OR METAL ENCLOSURE AFFIXED DIRECTLY TO BUNGALOW METALLIC STRUCTURAL MEMBER.
7 - CIRCUIT INTERRUPTERS 2 & 4 ARE MECHANICALLY INTERLOCKED WITH CIRCUIT INTERRUPTERS 6 & 8.

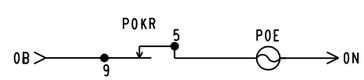

FIELD SET
03/19/13

NEW WORK

GE TRANSPORTATION
INTELLIGENT CONTROL SYSTEMS
Jacksonville, Florida
CSX PROJ #,IL2011037A DATE,01-29-13
DESIGNED BY,SAT CHECKED BY,DPL

XP4.E01
REV. 03-21-12

REMOTE CROSSING (19CWU)
6'X 6' HOUSE
W/FARADAY SHIELD

CSX TRANSPORTATION
RAIL TRANSPORT GROUP ENGINEERING
COMMUNICATIONS AND SIGNALS

CP FRANCISCO

POWER DISTRIBUTION
BLUE ISLAND, IL M.P. DIH 15.40

DESIGNED	DIGITIZED	CHECKED	DATE
GET/DLK	GET/SAT	GET/FAP	08-25-12

DESIGN DATE	REV. NO.	DRAWING	SHEET NO	FILE	SHEET
08-25-12	5	-----	-----	DIH01540	E08

19CWU

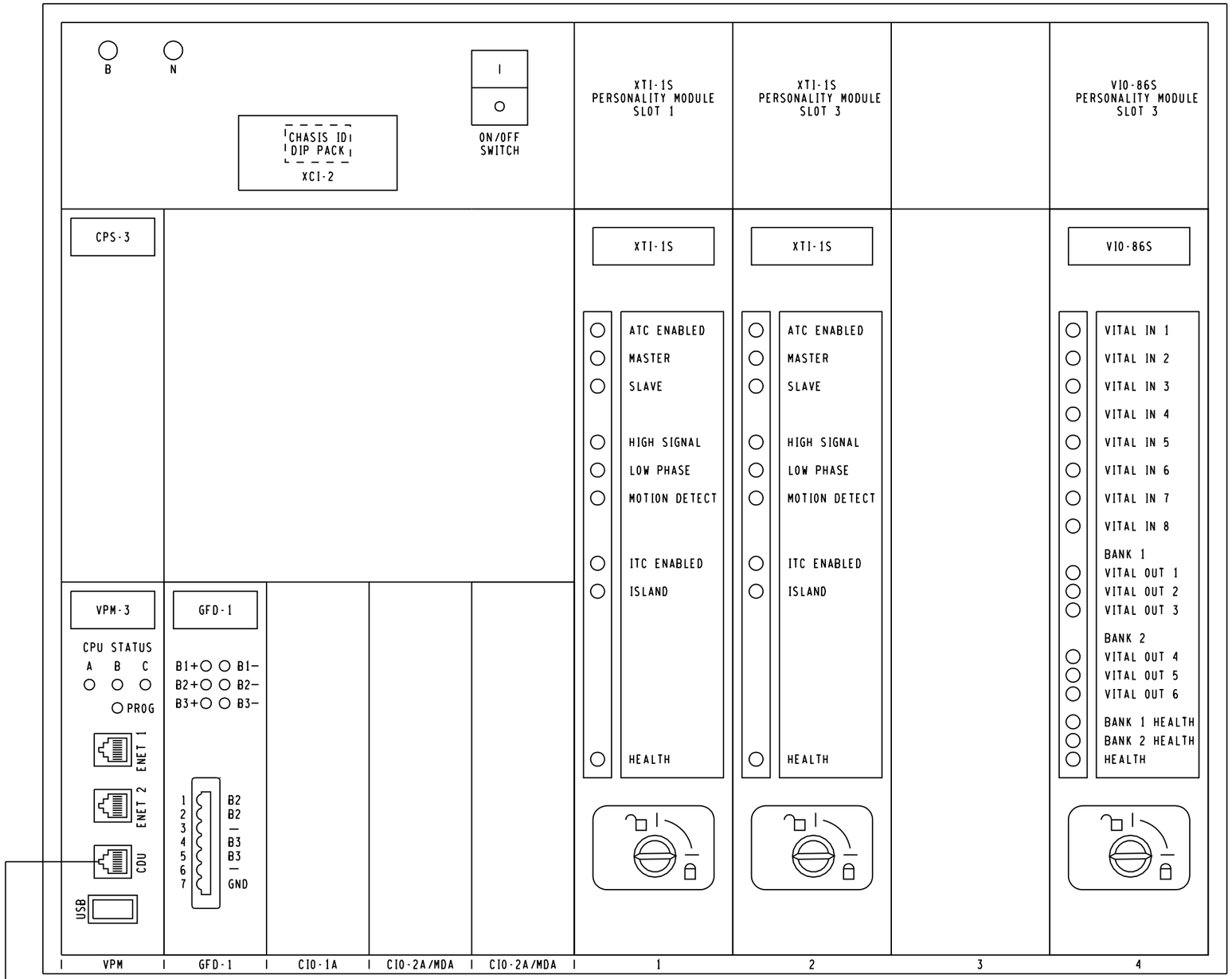

TYPICAL INSTALLATION OF EPROM & DIP SHUNT

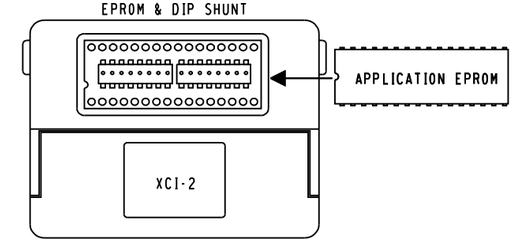

PROGRAM NAME:

CHASSIS ID:

CHASSIS ID DIP SHUNTS LOCATED ON BACKPLANE UNDERNEATH XCI-2 MODULE

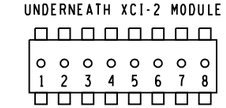

○ = TAB INTACT (MADE)
● = TAB PUNCHED OUT (BROKEN)

VITAL SELECTION ID-N/A

VITAL SELECTION DIP SHUNTS LOCATED INSIDE XCI-2 MODULE UNDERNEATH EPROM

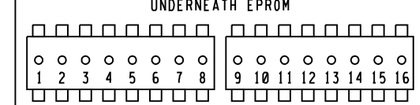

○ = TAB INTACT (MADE)
● = TAB PUNCHED OUT (BROKEN)

REMOTE CROSSING (19CWU)
6'X 6' HOUSE

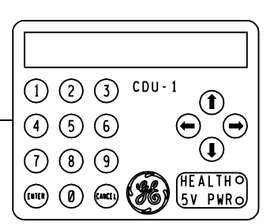

MODULE LEGEND:

CDU-1 = CONTROL DISPLAY UNIT
CPS-3 = CENTRAL POWER SUPPLY
VPM-3 = VITAL PERIPHERAL MASTER
GFD-1 = GROUND FAULT DETECTOR
CIO-1A = COMMUNICATION INPUT/OUTPUT
CIO-2A = COMMUNICATION INPUT/OUTPUT
CIO-MDA = COMMUNICATION INPUT/OUTPUT
XCI-2 = CHASSIS INFORMATION
VLD-R16S = VITAL LAMP DRIVER
VIO-86S = VITAL INPUTS/OUTPUTS

FIELD SET
03/19/13

NEW WORK

GE TRANSPORTATION
INTELLIGENT CONTROL SYSTEMS
Jacksonville, Florida
CSX PROJ #:1L2011037A DATE:01-29-13
DESIGNED BY:SAT CHECKED BY:DPL

CSX TRANSPORTATION
RAIL TRANSPORT GROUP ENGINEERING
COMMUNICATIONS AND SIGNALS

CP FRANCISCO

ELECTROLOGIXS MODULE XP4 CONFIGURATION
BLUE ISLAND, IL M.P. DIH 15.40

SEEOSELX3.E04WCM
REV. 08-31-10

DESIGNED	DIGITIZED	CHECKED	DATE
GET/DLK	GET/SAT	GET/FAP	08-25-12

DESIGN DATE	REV. NO.	DRAWING	SHEET NO	FILE	SHEET
08-25-12	5	-----	-----	DIH01540	E09

TOP ROW

POKR			
9	F	11	N68
10		12	C48

WALL MOUNTED

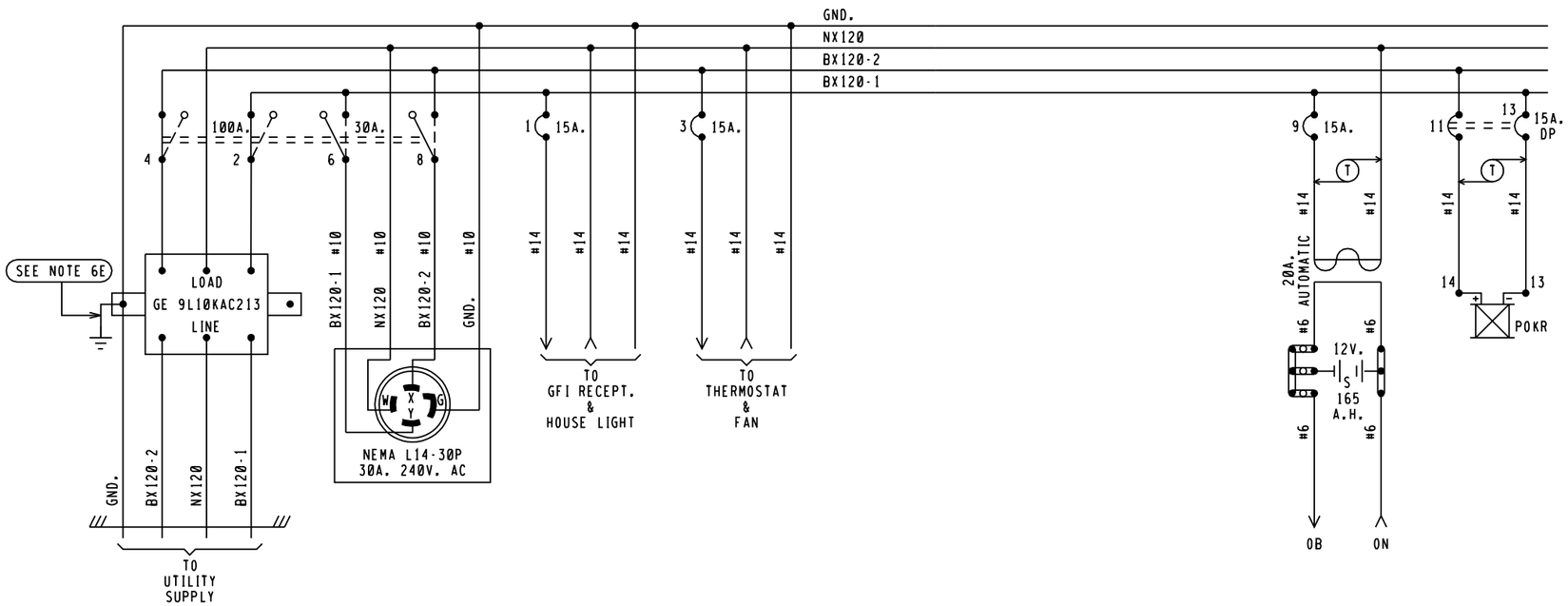

BX120-1	BX120-2
10.0 AMPS	2.0 AMPS

MAXIMUM LOAD
CALCULATED PER SS360

NOTES.

1 - REFERENCES ARE PER SCMS-13.
2 - ARRESTERS ARE PER SS382.
3 - SHELF RELAY PLACEMENT ON CONSIST CHART HAS NO SIGNIFICANCE.
4 - PLUG-IN RELAYS ARE VIEWED FROM THE FRONT OF RACK.
5 - BATTERY A.H. CAPACITY SHOWN IS THE MINIMUM REQUIREMENT.
6 - WIRING
  A - FEED TO ALL BUSSES, LIGHT CIRCUITS,MOTOR CIRCUITS TO BE #10 FLEX.
  B - 120-VOLT FEED FROM ENTRANCE TO POWER BUSS TO BE #10 FLEX.
  C - ALL TRACK WIRES TO BE #10 FLEX.
  D - ALL OTHERS TO BE #16 FLEX UNLESS NOTED.
  E - GROUND WIRE NOT NECESSARY WHEN GE ARRESTER IS MOUNTED ON GROUND PLANE OR METAL ENCLOSURE AFFIXED DIRECTLY TO BUNGALOW METALLIC STRUCTURAL MEMBER.
7 - CIRCUIT INTERRUPTERS 2 & 4 ARE MECHANICALLY INTERLOCKED WITH CIRCUIT INTERRUPTERS 6 & 8.

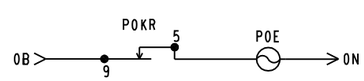

FIELD SET
03/19/13

NEW WORK

GE TRANSPORTATION
INTELLIGENT CONTROL SYSTEMS
Jacksonville, Florida
CSX PROJ #.IL2011037A DATE.01-29-13
DESIGNED BY.SAT CHECKED BY.DPL

XP4.E01
REV. 03-21-12

REMOTE CROSSING (71CWU)
6'X 6' HOUSE
W/FARADAY SHIELD

CSX TRANSPORTATION
RAIL TRANSPORT GROUP ENGINEERING
COMMUNICATIONS AND SIGNALS

CP FRANCISCO

POWER DISTRIBUTION
BLUE ISLAND, IL M.P. DIH 15.40

DESIGNED	DIGITIZED	CHECKED	DATE
GET/DLK	GET/SAT	GET/FAP	08-25-12

DESIGN DATE	REV. NO.	DRAWING	SHEET NO	FILE	SHEET
08-25-12	5	-----	-----	DIH01540	E10

71CWU

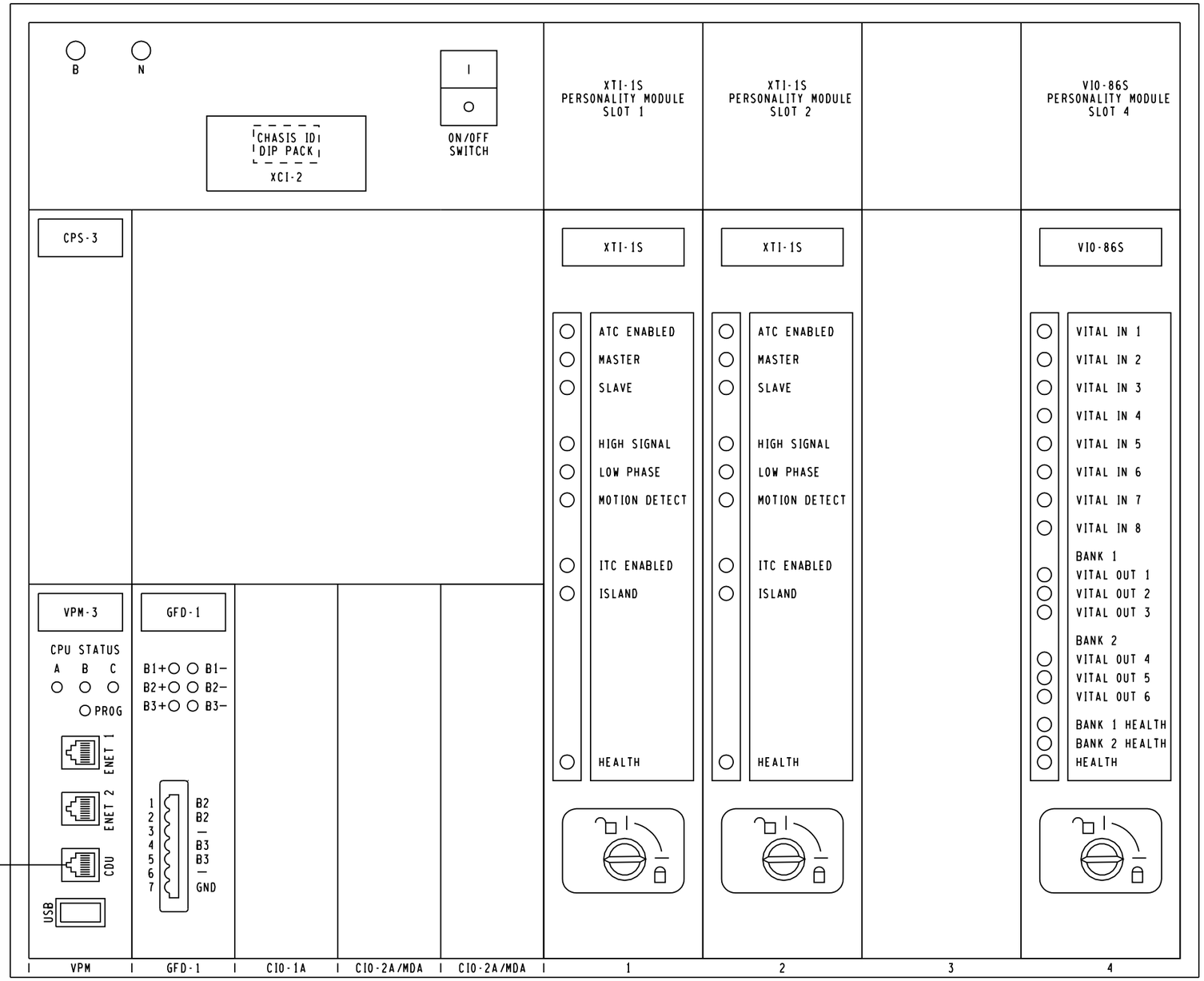

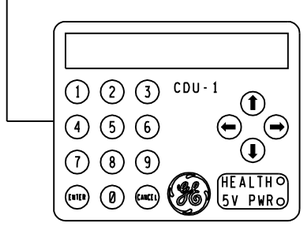

MODULE LEGEND:

CDU-1 = CONTROL DISPLAY UNIT
CPS-3 = CENTRAL POWER SUPPLY
VPM-3 = VITAL PERIPHERAL MASTER
GFD-1 = GROUND FAULT DETECTOR
CIO-1A = COMMUNICATION INPUT/OUTPUT
CIO-2A = COMMUNICATION INPUT/OUTPUT
CIO-MDA = COMMUNICATION INPUT/OUTPUT
XCI-2 = CHASSIS INFORMATION
VLD-R16S = VITAL LAMP DRIVER
VIO-86S = VITAL INPUTS/OUTPUTS

FIELD SET
03/19/13

NEW WORK

GE TRANSPORTATION
INTELLIGENT CONTROL SYSTEMS
Jacksonville, Florida
CSX PROJ #: IL2011037A DATE: 01-29-13
DESIGNED BY: SAT CHECKED BY: DPL

TYPICAL INSTALLATION OF EPROM & DIP SHUNT

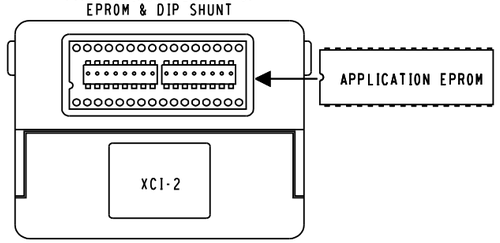

PROGRAM NAME: CHASSIS ID:

CHASSIS ID DIP SHUNTS
LOCATED ON BACKPLANE
UNDERNEATH XCI-2 MODULE

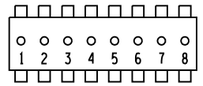

○ = TAB INTACT (MADE)
● = TAB PUNCHED OUT (BROKEN)

VITAL SELECTION ID-N/A

VITAL SELECTION DIP SHUNTS
LOCATED INSIDE XCI-2 MODULE
UNDERNEATH EPROM

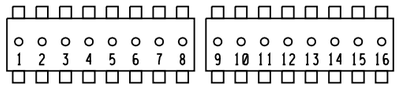

○ = TAB INTACT (MADE)
● = TAB PUNCHED OUT (BROKEN)

REMOTE CROSSING (71CWU)
6'X 6' HOUSE

CSX TRANSPORTATION
RAIL TRANSPORT GROUP ENGINEERING
COMMUNICATIONS AND SIGNALS

CP FRANCISCO

ELECTROLOGIXS MODULE XP4 CONFIGURATION
BLUE ISLAND, IL M.P. DIH 15.40

SEEOSELX3.E04WCM
REV. 08-31-10

DESIGNED	DIGITIZED	CHECKED	DATE
GET/DLK	GET/SAT	GET/FAP	08-25-12

DESIGN DATE	REV. NO.	DRAWING	SHEET NO	FILE	SHEET
08-25-12	5	-----	-----	DIH01540	E11

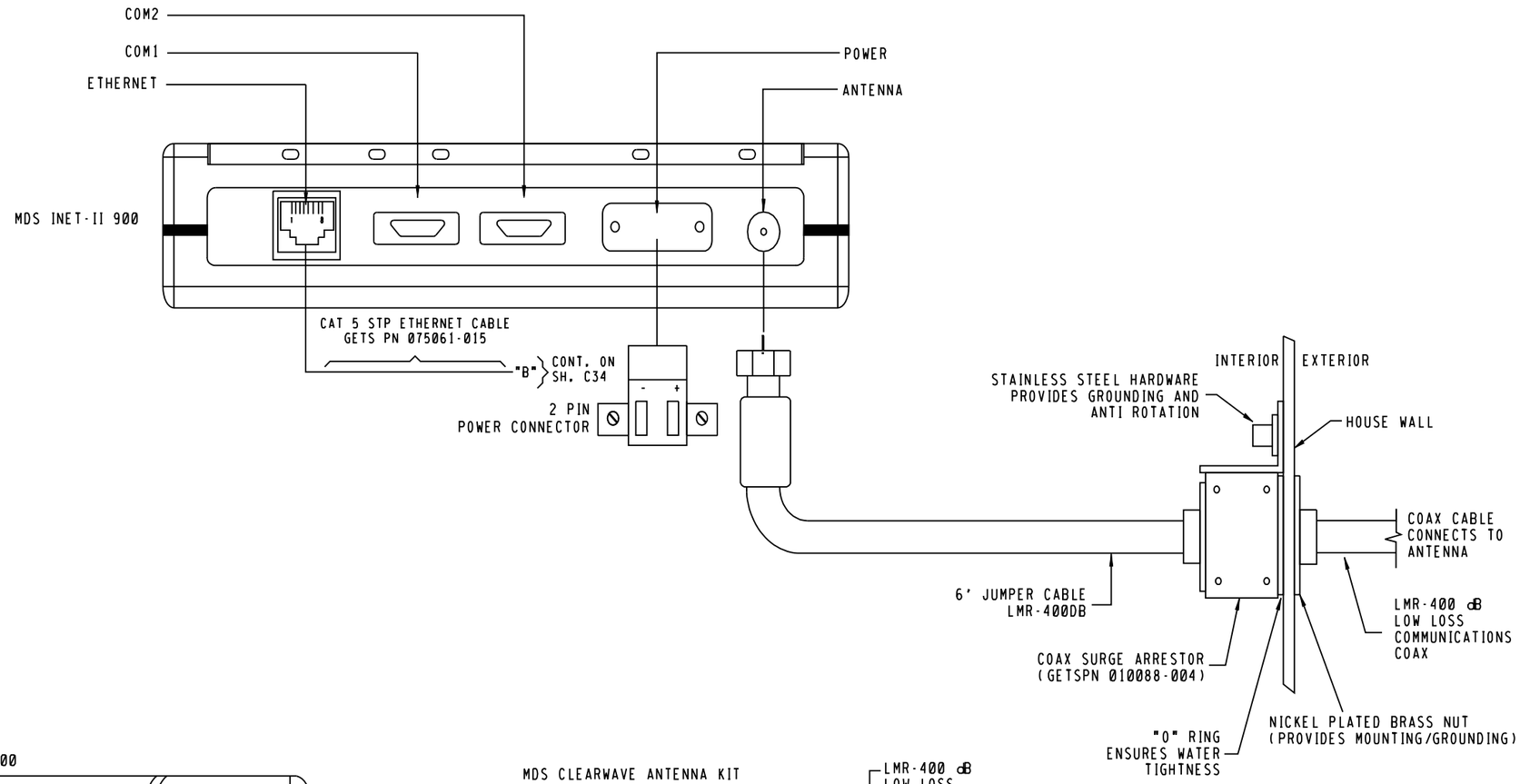

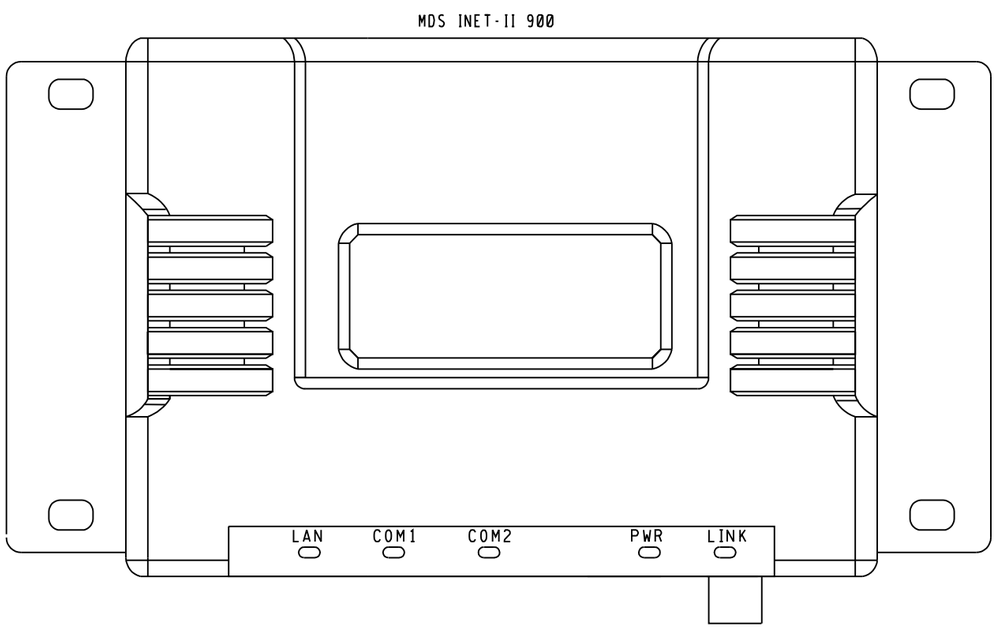

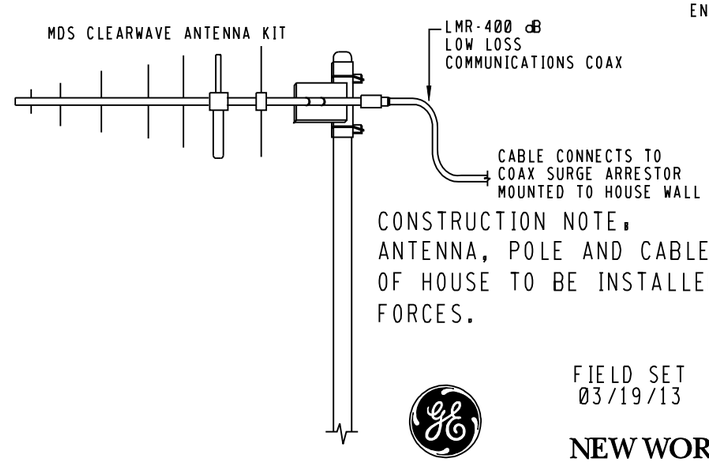

CONSTRUCTION NOTE:
ANTENNA, POLE AND CABLE TO OUTSIDE OF HOUSE TO BE INSTALLED BY FIELD FORCES.

FIELD SET
03/19/13

NEW WORK

GE TRANSPORTATION
INTELLIGENT CONTROL SYSTEMS
Jacksonville, Florida
CSX PROJ #:IL2011037A DATE:01-29-13
DESIGNED BY:SAT CHECKED BY:DPL

REMOTE CROSSING (71CWU)
6'X 6' HOUSE

CSX TRANSPORTATION
RAIL TRANSPORT GROUP ENGINEERING
COMMUNICATIONS AND SIGNALS

CP FRANCISCO

ACCESS POINT INET-II 900 RADIO DETAILS
BLUE ISLAND, IL M.P. DIH 15.40

DX0ELX3.E07
REV. 05-31-09

DESIGNED	DIGITIZED	CHECKED	DATE
GET/DLK	GET/SAT	GET/FAP	08-25-12

DESIGN DATE	REV. NO.	DRAWING	SHEET NO	FILE	SHEET
08-25-12	5	-----	-----	DIH01540	E12

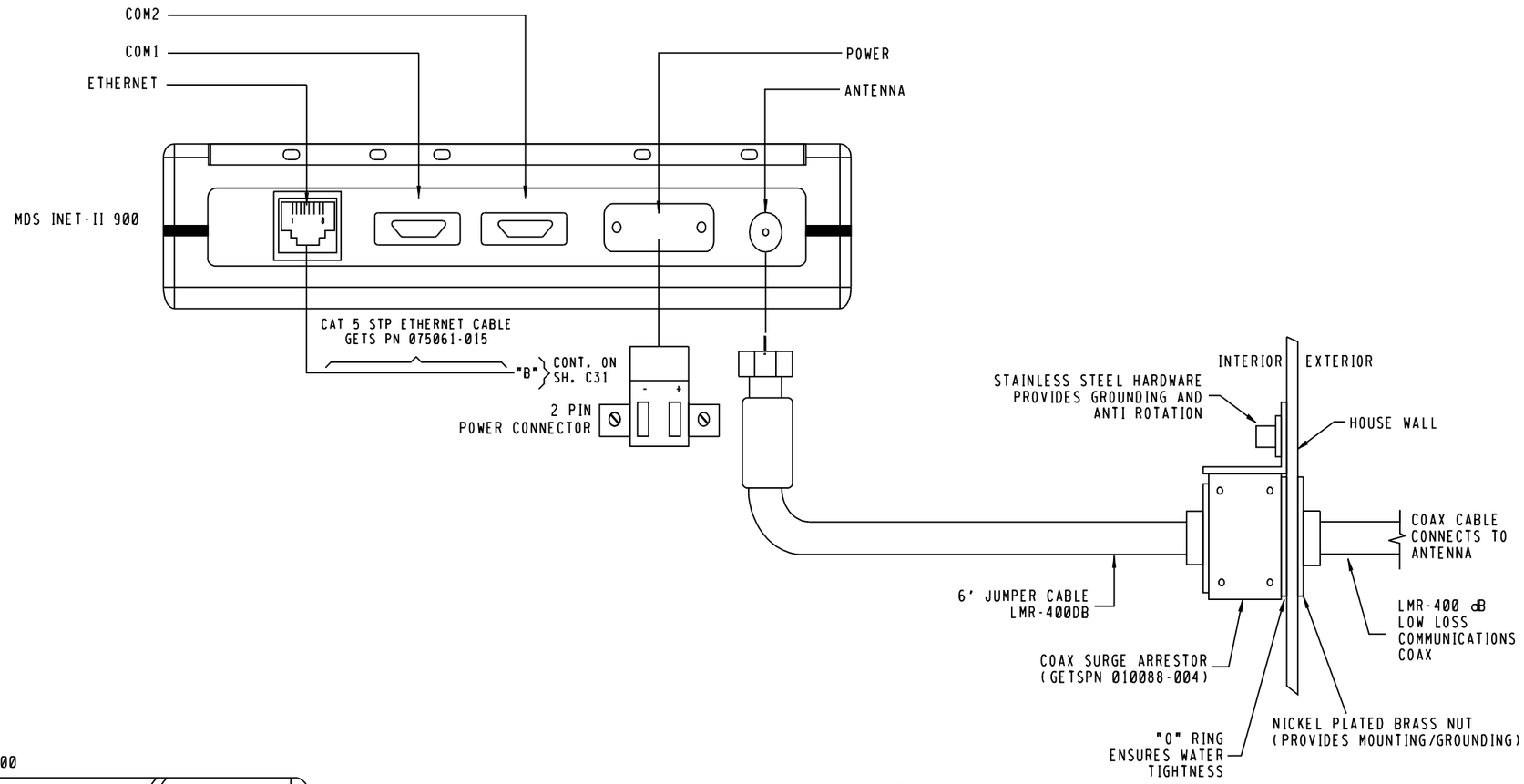

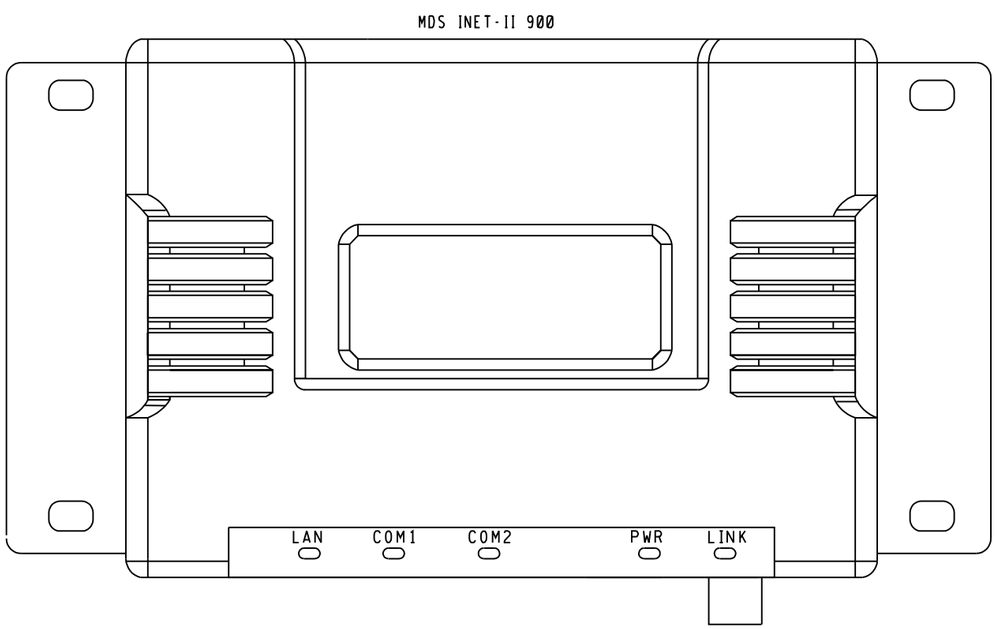

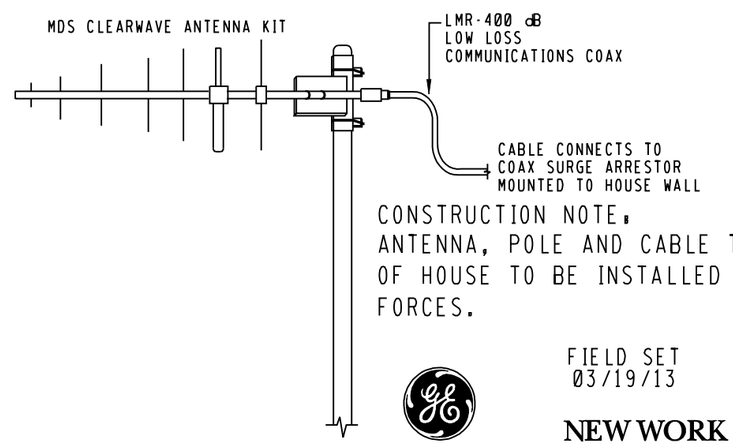

CONSTRUCTION NOTE:
ANTENNA, POLE AND CABLE TO OUTSIDE OF HOUSE TO BE INSTALLED BY FIELD FORCES.

REMOTE CROSSING (19CWU)
6'X 6' HOUSE

FIELD SET
03/19/13

NEW WORK

GE TRANSPORTATION
INTELLIGENT CONTROL SYSTEMS
Jacksonville, Florida
CSX PROJ #:IL2011037A DATE:01-29-13
DESIGNED BY:SAT CHECKED BY:DPL

DX0ELX3.E07
REV. 05-31-09

CSX TRANSPORTATION
RAIL TRANSPORT GROUP ENGINEERING
COMMUNICATIONS AND SIGNALS

CP FRANCISCO

ACCESS POINT INET-II 900 RADIO DETAILS
BLUE ISLAND, IL M.P. DIH 15.40

DESIGNED	DIGITIZED	CHECKED	DATE
GET/SAT	GET/SAT	GET/DPL	01-29-13

DESIGN DATE	REV. NO.	DRAWING	SHEET NO	FILE	SHEET
01-29-13	6	-----	-----	DIH01540	E13

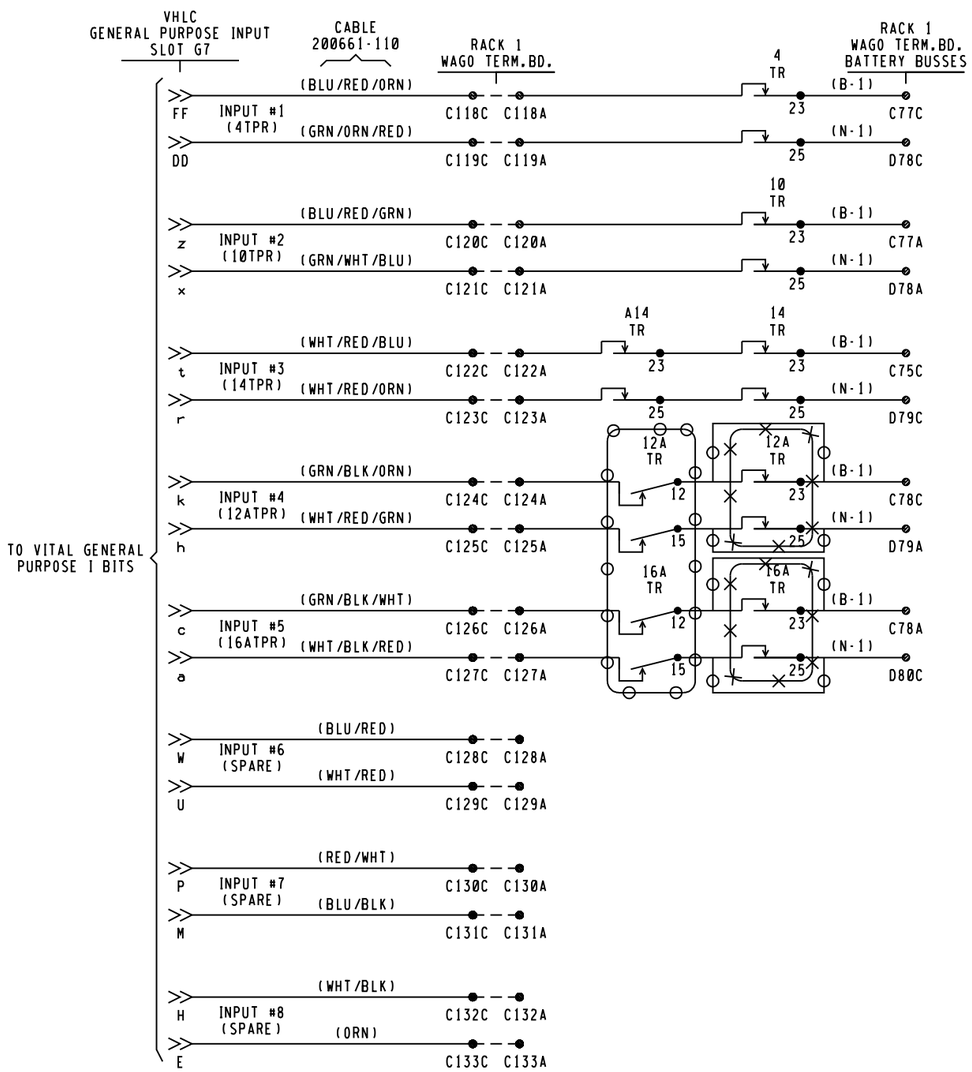

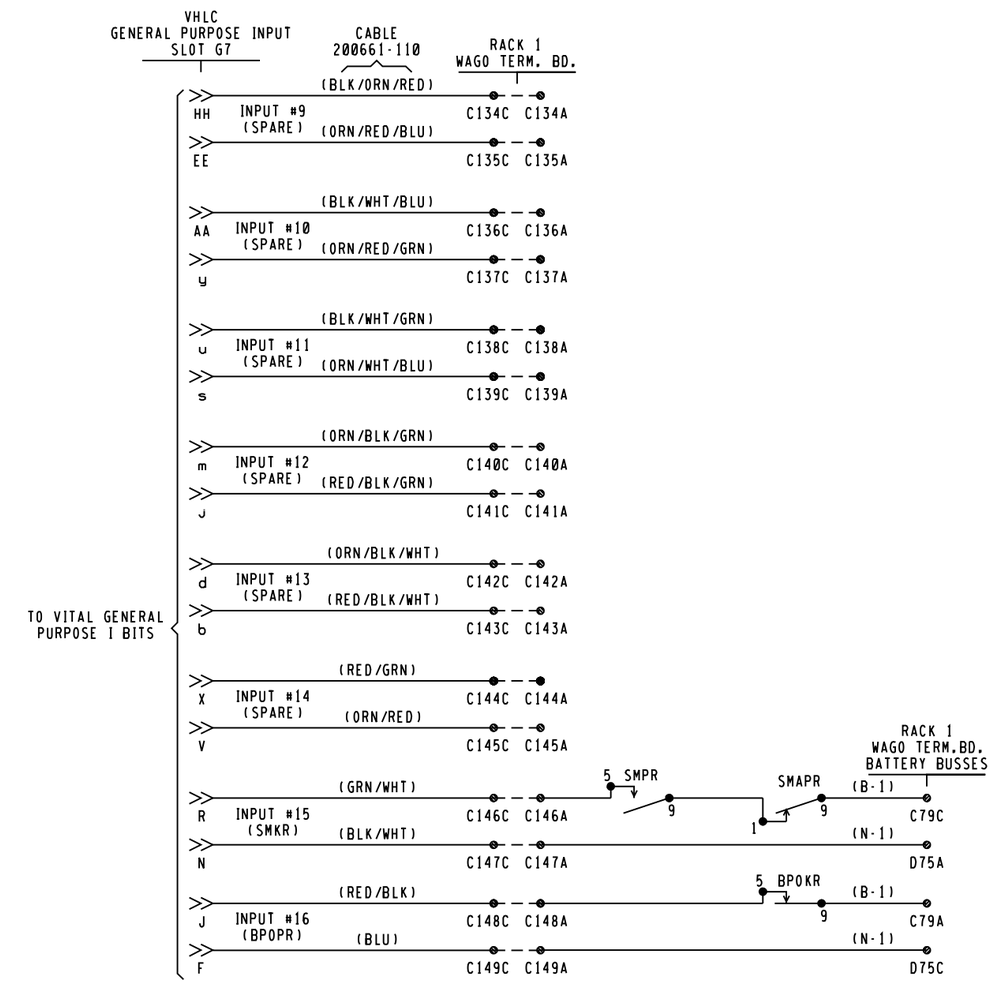

16VGP1 CABLE
CONNECTOR

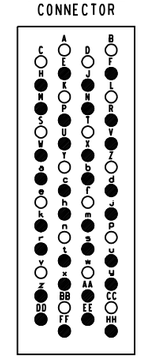

FIELD SET
03/19/13

⊖⊖⊖ = IN
⊗⊗⊗ = OUT

NOTE,

1. ALL WIRING #14 UNLESS NOTED OTHERWISE.

LOCATION B

GE TRANSPORTATION
INTELLIGENT CONTROL SYSTEMS
Jacksonville, Florida
CSX PROJ #,IL2011037A DATE,01-29-13
DESIGNED BY,SAT CHECKED BY,DPL

CSX TRANSPORTATION
RAIL TRANSPORT GROUP ENGINEERING
COMMUNICATIONS AND SIGNALS

CP FRANCISCO

VHLC I/O CIRCUITS
BLUE ISLAND, IL M.P. DIH-15.40

DESIGNED	DIGITIZED	CHECKED	DATE
SWE/RGH	SWE/WMG	SWE	05-15-08

DESIGN DATE	REV. NO.	DRAWING	SHEET NO	FILE	SHEET
05-15-08	1	-----	-----	DIH01540	C19

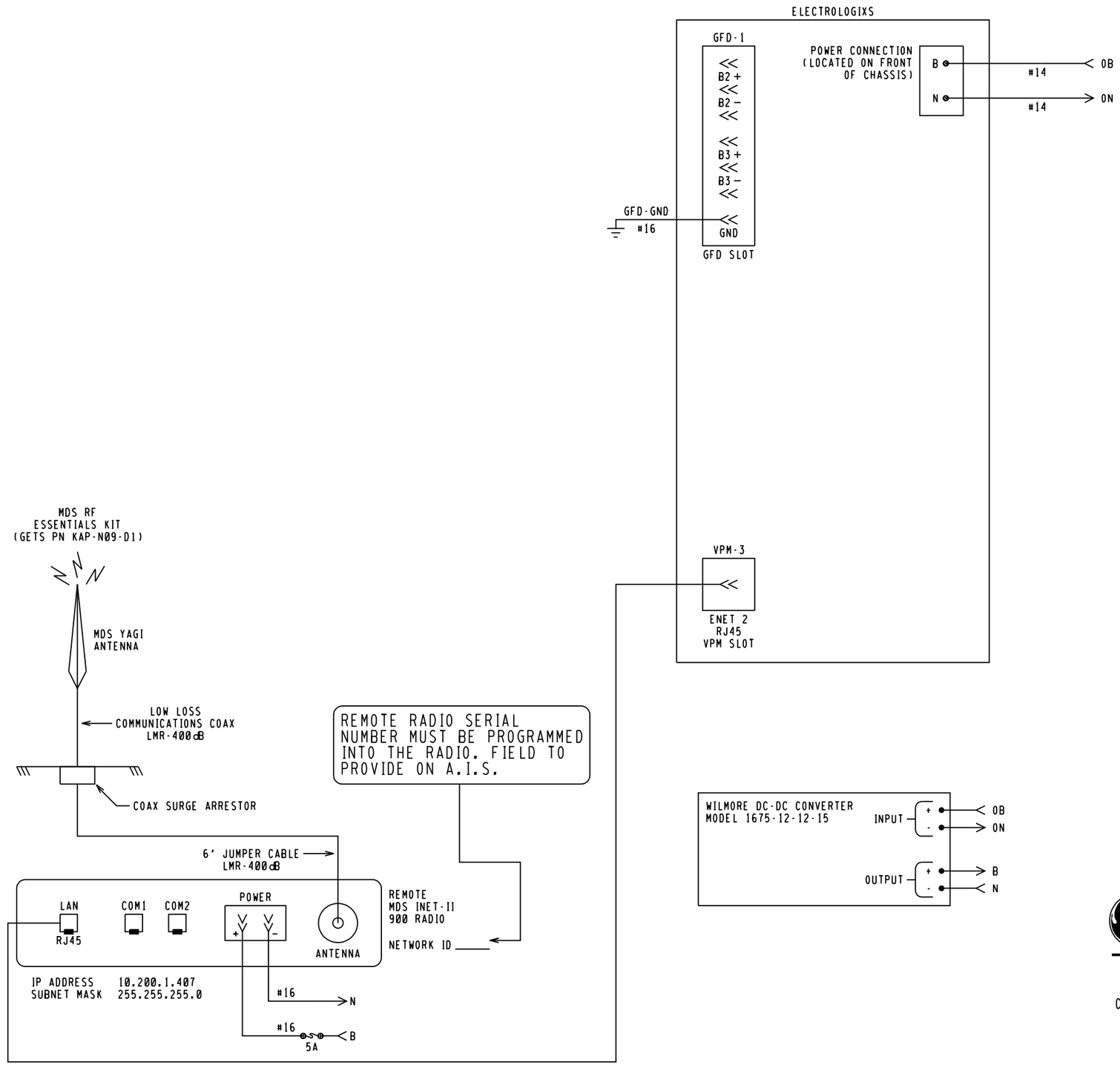

FIELD SET
03/19/13

NOTE:

(✕) = SUPPLIED & WIRED BY RAILROAD.

REMOTE CROSSING XP4-19CWU

NEW WORK

GE TRANSPORTATION
INTELLIGENT CONTROL SYSTEMS
Jacksonville, Florida
CSX PROJ #: IL2011037A DATE: 01-29-13
DESIGNED BY: SAT CHECKED BY: DPL

CSX TRANSPORTATION
RAIL TRANSPORT GROUP ENGINEERING
COMMUNICATIONS AND SIGNALS

CP FRANCISCO

19CWU ELECTROLOGIXS XP4 CIRCUITS
BLUE ISLAND, IL M.P. DIH 15.40

DXOELX3.C11
REV. 08-31-10

DESIGNED	DIGITIZED	CHECKED	DATE
GET/DLK	GET/SAT	GET/FAP	08-25-12

DESIGN DATE	REV. NO.	DRAWING	SHEET NO	FILE	SHEET
08-25-12	5	-----	-----	DIH01540	C31

SITE SPECIFIC MDR DESCRIPTIONS AND SETTINGS																		
NAME		MDR1			MDR2			MDR3			MDR4			MDR5			MDR6		
FUNCTION		AX1			AX2			AX3			AX4			AX5			AX6		
WARNING TIME		60			60			NA			NA			NA			NA		
CW/MD		CW*			CW*			NA			NA			NA			NA		
AP TIME(PREEMPT)		NA			NA			NA			NA			NA			NA		
CWE-WT		80			80			NA			NA			NA			NA		
AUX RECOVERY DELAY		0			0			NA			NA			NA			NA		
TRACK		TK 1	TK 2	TK 3	TK 1	TK 2	TK 3	TK 1	TK 2	TK 3	TK 1	TK 2	TK 3	TK 1	TK 2	TK 3	TK 1	TK 2	TK 3
TRACK ASSIGNED		ASSIGNED	UNASSIGNED	UNASSIGNED	UNASSIGNED	ASSIGNED	UNASSIGNED	UNASSIGNED	UNASSIGNED	UNASSIGNED	UNASSIGNED	UNASSIGNED	UNASSIGNED	UNASSIGNED	UNASSIGNED	UNASSIGNED	UNASSIGNED	UNASSIGNED	UNASSIGNED
OFFSET DISTANCE		3132'	NA	NA	NA	3132'	NA	NA	NA	NA	NA	NA	NA	NA	NA	NA	NA	NA	NA
MD RESTART		0*	NA	NA	NA	0*	NA	NA	NA	NA	NA	NA	NA	NA	NA	NA	NA	NA	NA
SUDDEN SHUNT ZONE		0*	NA	NA	NA	0*	NA	NA	NA	NA	NA	NA	NA	NA	NA	NA	NA	NA	NA
POSITIVE START	PSEN	DISABLE	NA	NA	NA	DISABLE	NA	NA	NA	NA	NA	NA	NA	NA	NA	NA	NA	NA	NA
	PSRX	NA	NA	NA	NA	NA	NA	NA	NA	NA	NA	NA	NA	NA	NA	NA	NA	NA	NA
	PST	NA	NA	NA	NA	NA	NA	NA	NA	NA	NA	NA	NA	NA	NA	NA	NA	NA	NA
POST JOINT DETECT	PJEN	ENABLE	NA	NA	NA	ENABLE	NA	NA	NA	NA	NA	NA	NA	NA	NA	NA	NA	NA	NA
	PJRX	15	NA	NA	NA	15	NA	NA	NA	NA	NA	NA	NA	NA	NA	NA	NA	NA	NA
	PJDT	15	NA	NA	NA	15	NA	NA	NA	NA	NA	NA	NA	NA	NA	NA	NA	NA	NA
CLEAR JOINT LOS	CJ-LOS MODE	STANDARD	NA	NA	NA	STANDARD	NA	NA	NA	NA	NA	NA	NA	NA	NA	NA	NA	NA	NA
	CJ-LOS RX	15	NA	NA	NA	15	NA	NA	NA	NA	NA	NA	NA	NA	NA	NA	NA	NA	NA
	CJ-LOS TIME	5	NA	NA	NA	5	NA	NA	NA	NA	NA	NA	NA	NA	NA	NA	NA	NA	NA

BASIC TRACK SETUP		
	TRACK 1	TRACK 2
FREQUENCY	979 HZ	979 HZ
MASTER/SLAVE	MASTER	SLAVE
RX ADJUST	100 *	100 *
TCA	*	*
DIRECTION MODE	UNI	UNI
LIA	*	*
ADVANCED APPROACH	*	*
NBS COMP RX	*	*
TRK ISLAND ASSIGN	NA	NA
APPROACH LENGTH	783'	783'
AUTO RX	ENABLE	ENABLE

ADVANCED TRACK SETUP			
		TRACK 1	TRACK 2
MOTION DET TIMER	MDEN	DISABLE	DISABLE
	MDTT	10 MIN	10 MIN
FALSE SHUNT	FSEN	DISABLE	DISABLE
	FSRX	NA	NA
	FST	NA	NA
APPROACH RELEASE	AREN	DISABLE	DISABLE
	ARRX	NA	NA
	ART	NA	NA
LOS TIME		16 SEC	16 SEC
IJ-LOS TIME		5 SEC	5 SEC
NRML*SHRT*VRYSHRT		*	*

ISLAND SETUP (NOT USED)		
	TRACK 1	TRACK 2
ENABLE/DISABLE	DISABLE	DISABLE
FREQUENCY	X.X KHZ	X.X KHZ
LOSS OF SHUNT	2 SEC.	2 SEC.
FAULT DELAY	1 OR 2	1 OR 2

VPM3 ETHERNET SETUP	
	IP ADDRESS
ETHERNET PORT 1 (TOP)	192.168.0.11
ETHERNET PORT 2 (BOTTOM)	10.200.1.107
REMOTE 1	
LOC NETWORK ID	1007
DESTINATION NETWORK ID	1006
DESTINATION IP ADDRESS	10.200.1.106
RP 2000 PORT NUMBER	8280

NOTES:
* = FIELD ADJUSTMENT
NA = NOT APPLICABLE

REMOTE CROSSING (19CWU)
6'X 6' HOUSE

FIELD SET
06/11/13

NEW WORK

GE TRANSPORTATION
INTELLIGENT CONTROL SYSTEMS
Jacksonville, Florida
CSX PROJ #:IL2011037A DATE:01-29-13
DESIGNED BY:SAT CHECKED BY:DPL

C4R-3.C02
REV. 02-29-12

CSX TRANSPORTATION
RAIL TRANSPORT GROUP ENGINEERING
COMMUNICATIONS AND SIGNALS

CP FRANCISCO

XP4 19CWU MODULE SETUP INFORMATION
BLUE ISLAND, IL M.P. DIH 15.40

DESIGNED	DIGITIZED	CHECKED	DATE
GET/DLK	GET/SAT	GET/FAP	08-25-12

DESIGN DATE	REV. NO.	DRAWING	SHEET NO	FILE	SHEET
08-25-12	5	-----	-----	DIH01540	C32

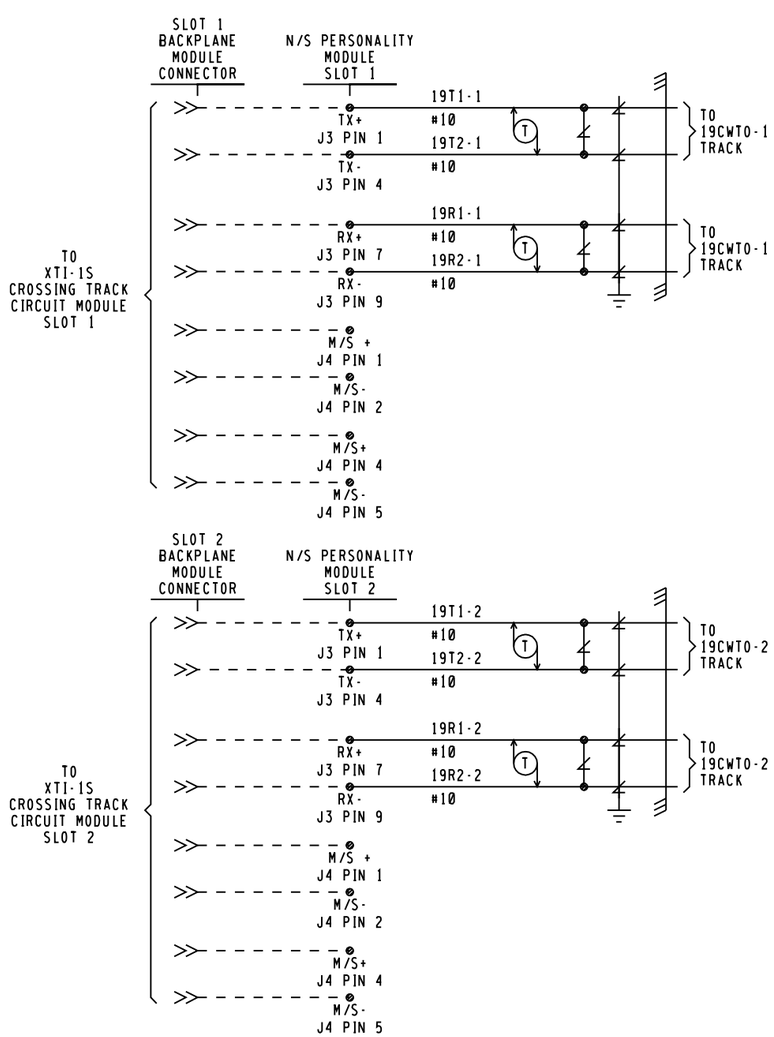

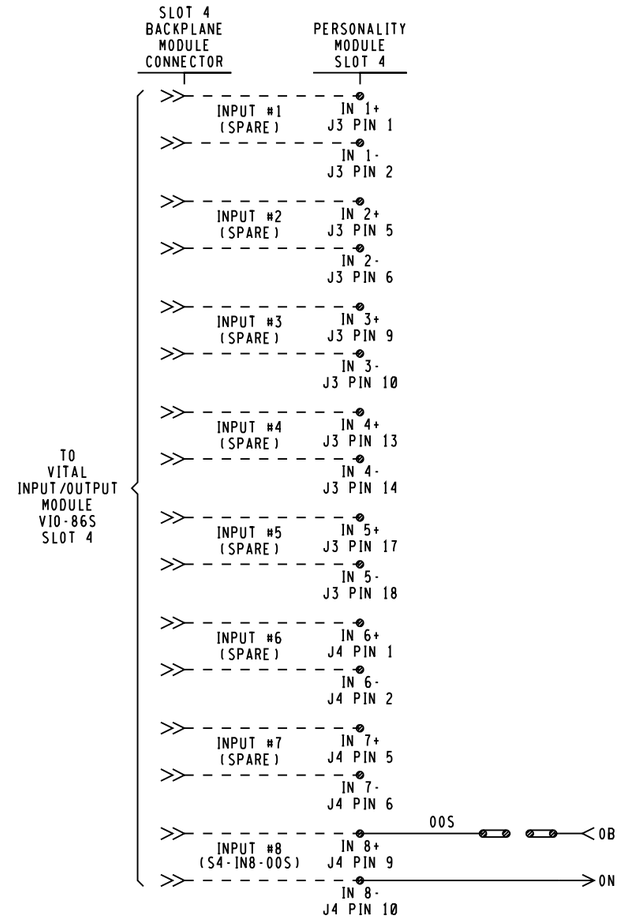

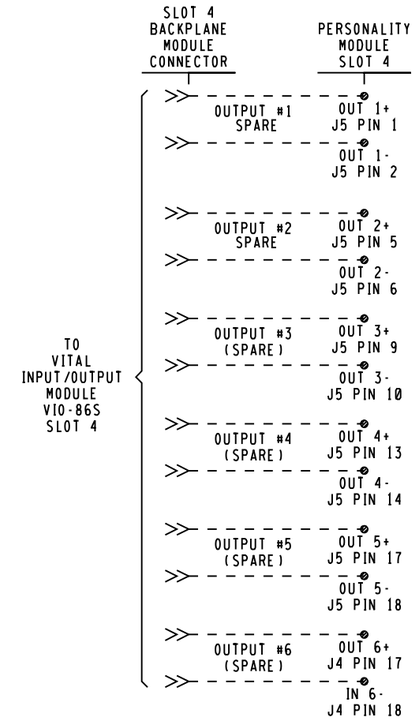

NOTES
1. ALL WIRE THIS SHEET #16 AWG UNLESS NOTED.
2. APPROACH DISABLE JUMPER INPUT. THIS INPUT IS USED IN COMBINATION WITH THE SOFT APPROACH DISABLE ACCESSED THROUGH THE CDU-1 KEYPAD. BOTH BITS MUST BE HIGH TO DISABLE AN APPROACH. THE OPERATOR IS SOLELY RESPONSIBLE FOR CROSSING PROTECTION WHEN THE APPROACH DISABLE FUNCTION IS ACTIVATED.

FIELD SET
03/19/13

NEW WORK

GE TRANSPORTATION
INTELLIGENT CONTROL SYSTEMS
Jacksonville, Florida
CSX PROJ #,IL2011037A DATE,01-29-13
DESIGNED BY,SAT CHECKED BY,DPL

REMOTE CROSSING (19CWU)
6'X 6' HOUSE

CSX TRANSPORTATION
RAIL TRANSPORT GROUP ENGINEERING
COMMUNICATIONS AND SIGNALS

CP FRANCISCO

XP4 19CWU MODULE CONNECTOR USAGE
BLUE ISLAND, IL M.P. DIH 15.40

C4R-3.C01
REV. 12-12-11

DESIGNED	DIGITIZED	CHECKED	DATE
GET/DLK	GET/SAT	GET/FAP	08-25-12

DESIGN DATE	REV. NO.	DRAWING	SHEET NO	FILE	SHEET
08-25-12	5	-----	-----	DIH01540	C33

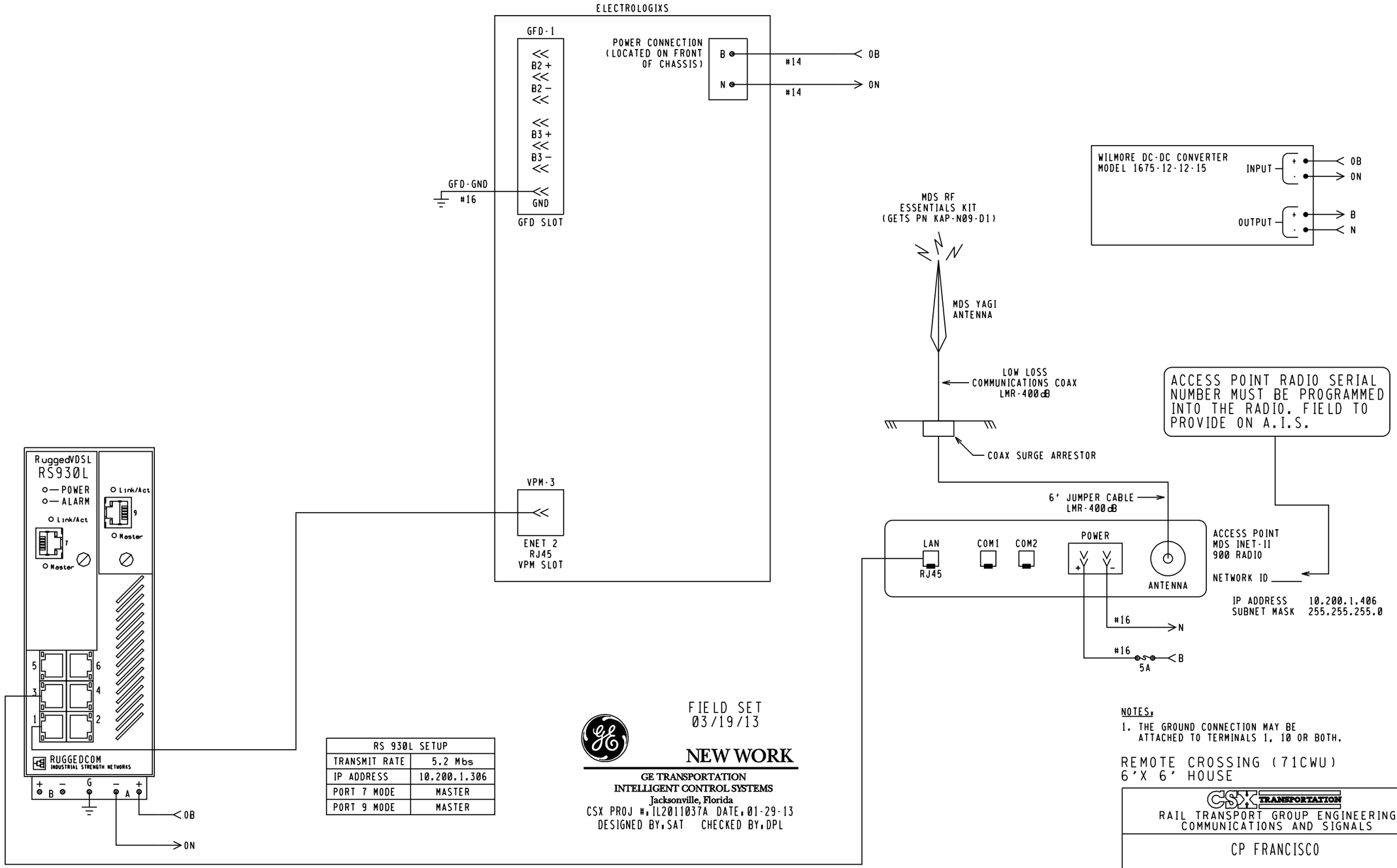

RS 930L SETUP	
TRANSMIT RATE	5.2 Mbs
IP ADDRESS	10.200.1.306
PORT 7 MODE	MASTER
PORT 9 MODE	MASTER

FIELD SET
03/19/13

NEW WORK

GE TRANSPORTATION
INTELLIGENT CONTROL SYSTEMS
Jacksonville, Florida
CSX PROJ #,IL2011037A DATE,01-29-13
DESIGNED BY,SAT CHECKED BY,DPL

NOTES,

1. THE GROUND CONNECTION MAY BE ATTACHED TO TERMINALS 1, 10 OR BOTH.

REMOTE CROSSING (71CWU)
6'X 6' HOUSE

CSX TRANSPORTATION
RAIL TRANSPORT GROUP ENGINEERING
COMMUNICATIONS AND SIGNALS

CP FRANCISCO

71CWU ELECTROLOGIXS CIRCUITS
BLUE ISLAND, IL M.P. DIH 15.40

DESIGNED	DIGITIZED	CHECKED	DATE
GET/DLK	GET/SAT	GET/FAP	08-25-12

DESIGN DATE	REV. NO.	DRAWING	SHEET NO	FILE	SHEET
08-25-12	5	-----	-----	DIH01540	C34

SITE SPECIFIC MDR DESCRIPTIONS AND SETTINGS

NAME		MDR1			MDR2			MDR3			MDR4			MDR5			MDR6		
FUNCTION		AX1			AX2			AX3			AX4			AX5			AX6		
WARNING TIME		60			60			NA			NA			NA			NA		
CW/MD		CW*			CW*			NA			NA			NA			NA		
AP TIME(PREEMPT)		NA			NA			NA			NA			NA			NA		
CWE-WT		80			80			NA			NA			NA			NA		
AUX RECOVERY DELAY		0			0			NA			NA			NA			NA		
TRACK		TK 1	TK 2	TK 3	TK 1	TK 2	TK 3	TK 1	TK 2	TK 3	TK 1	TK 2	TK 3	TK 1	TK 2	TK 3	TK 1	TK 2	TK 3
TRACK ASSIGNED		ASSIGNED	UNASSIGNED	UNASSIGNED	UNASSIGNED	ASSIGNED	UNASSIGNED	UNASSIGNED	UNASSIGNED	UNASSIGNED	UNASSIGNED	UNASSIGNED	UNASSIGNED	UNASSIGNED	UNASSIGNED	UNASSIGNED	UNASSIGNED	UNASSIGNED	UNASSIGNED
OFFSET DISTANCE		1856'	NA	NA	NA	1856'	NA	NA	NA	NA	NA	NA	NA	NA	NA	NA	NA	NA	NA
MD RESTART		0*	NA	NA	NA	0*	NA	NA	NA	NA	NA	NA	NA	NA	NA	NA	NA	NA	NA
SUDDEN SHUNT ZONE		0*	NA	NA	NA	0*	NA	NA	NA	NA	NA	NA	NA	NA	NA	NA	NA	NA	NA
POSITIVE START	PSEN	DISABLE	NA	NA	NA	DISABLE	NA	NA	NA	NA	NA	NA	NA	NA	NA	NA	NA	NA	NA
	PSRX	NA	NA	NA	NA	NA	NA	NA	NA	NA	NA	NA	NA	NA	NA	NA	NA	NA	NA
	PST	NA	NA	NA	NA	NA	NA	NA	NA	NA	NA	NA	NA	NA	NA	NA	NA	NA	NA
POST JOINT DETECT	PJEN	ENABLE	NA	NA	NA	ENABLE	NA	NA	NA	NA	NA	NA	NA	NA	NA	NA	NA	NA	NA
	PJRX	15	NA	NA	NA	15	NA	NA	NA	NA	NA	NA	NA	NA	NA	NA	NA	NA	NA
	PJDT	15	NA	NA	NA	15	NA	NA	NA	NA	NA	NA	NA	NA	NA	NA	NA	NA	NA
CLEAR JOINT LOS	CJ-LOS MODE	STANDARD	NA	NA	NA	STANDARD	NA	NA	NA	NA	NA	NA	NA	NA	NA	NA	NA	NA	NA
	CJ-LOS RX	15	NA	NA	NA	15	NA	NA	NA	NA	NA	NA	NA	NA	NA	NA	NA	NA	NA
	CJ-LOS TIME	5	NA	NA	NA	5	NA	NA	NA	NA	NA	NA	NA	NA	NA	NA	NA	NA	NA

BASIC TRACK SETUP

	TRACK 1	TRACK 2
FREQUENCY	452 HZ	452 HZ
MASTER/SLAVE	MASTER	SALVE
RX ADJUST	100 *	100 *
TCA	*	*
DIRECTION MODE	UNI	UNI
LIA	*	*
ADVANCED APPROACH	*	*
NBS COMP RX	*	*
TRK ISLAND ASSIGN	NA	NA
APPROACH LENGTH	1276'	1276'
AUTO RX	ENABLE	ENABLE

VPM3 ETHERNET REMOTE SETUP

REMOTE 1	
LOC NETWORK ID	1006
DESTINATION NETWORK ID	1005
DESTINATION IP ADDRESS	10.200.1.105
RP 2000 PORT NUMBER	8280
REMOTE 2	
LOC NETWORK ID	1006
DESTINATION NETWORK ID	1007
DESTINATION IP ADDRESS	10.200.1.107
RP 2000 PORT NUMBER	8280

VPM3 ETHERNET SETUP

	IP ADDRESS
ETHERNET PORT 1 (TOP)	192.168.0.11
ETHERNET PORT 2 (BOTTOM)	10.200.1.106

ADVANCED TRACK SETUP

		TRACK 1	TRACK 2
MOTION DET TIMER	MDEN	DISABLE	DISABLE
	MDTT	10 MIN	10 MIN
FALSE SHUNT	FSEN	DISABLE	DISABLE
	FSRX	NA	NA
	FST	NA	NA
APPROACH RELEASE	AREN	DISABLE	DISABLE
	ARRX	NA	NA
	ART	NA	NA
LOS TIME		16 SEC	16 SEC
IJ-LOS TIME		5 SEC	5 SEC
NRML*SHRT*VRYSHRT		*	*

ISLAND SETUP (NOT USED)

	TRACK 1	TRACK 2
ENABLE/DISABLE	DISABLE	DISABLE
FREQUENCY	X.X KHZ	X.X KHZ
LOSS OF SHUNT	2 SEC.	2 SEC.
FAULT DELAY	1 OR 2	1 OR 2

NOTES:
* = FIELD ADJUSTMENT
NA = NOT APPLICABLE

REMOTE CROSSING (71CWU)
6'X 6' HOUSE

FIELD SET
06/11/13

NEW WORK

GE TRANSPORTATION
INTELLIGENT CONTROL SYSTEMS
Jacksonville, Florida
CSX PROJ #:IL2011037A DATE:01-29-13
DESIGNED BY:SAT CHECKED BY:DPL

C4R-3.C02
REV. 02-29-12

CSX TRANSPORTATION
RAIL TRANSPORT GROUP ENGINEERING
COMMUNICATIONS AND SIGNALS

CP FRANCISCO

XP4 71CWU MODULE SETUP INFORMATION
BLUE ISLAND, IL M.P. DIH 15.40

DESIGNED	DIGITIZED	CHECKED	DATE
GET/DLK	GET/SAT	GET/FAP	08-25-12

DESIGN DATE	REV. NO.	DRAWING	SHEET NO	FILE	SHEET
08-25-12	5	-----	-----	DIH01540	C35

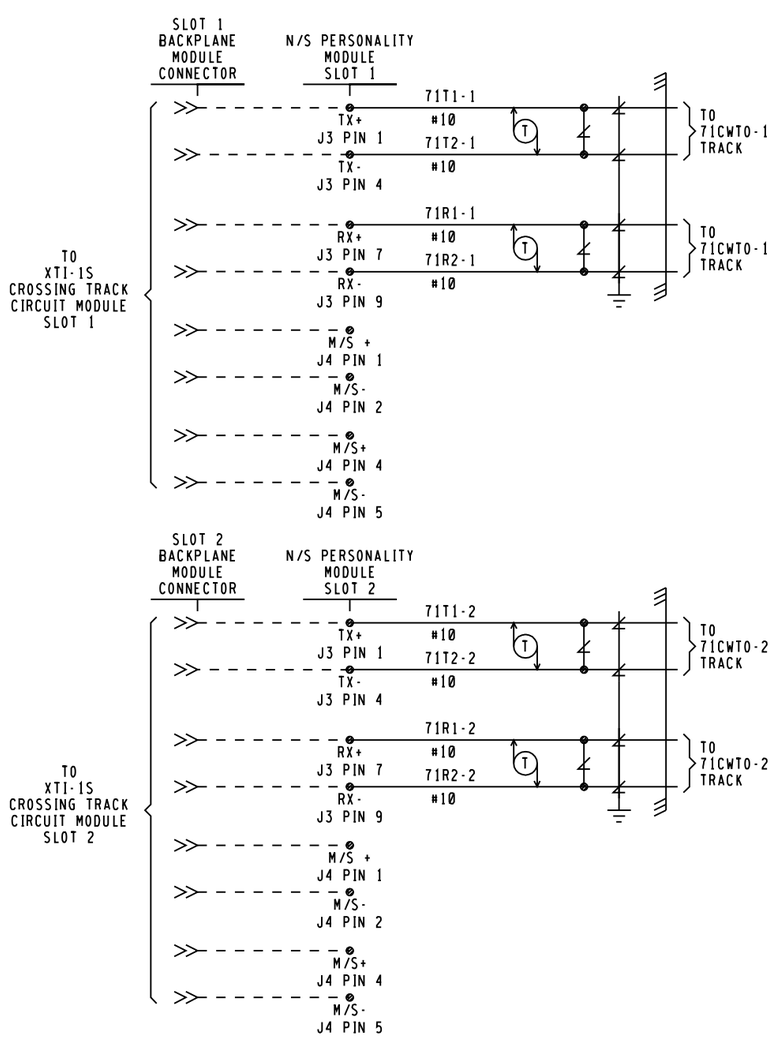

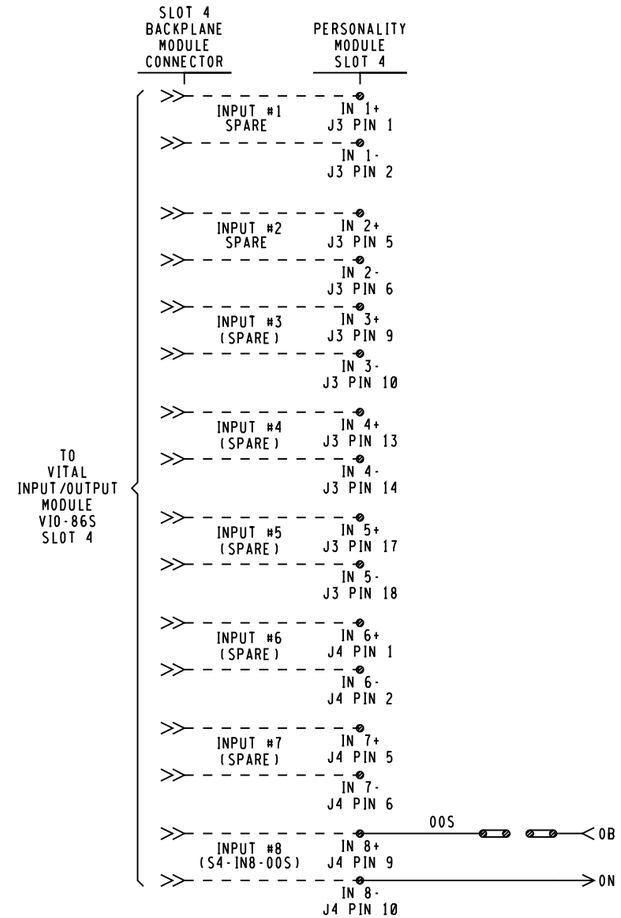

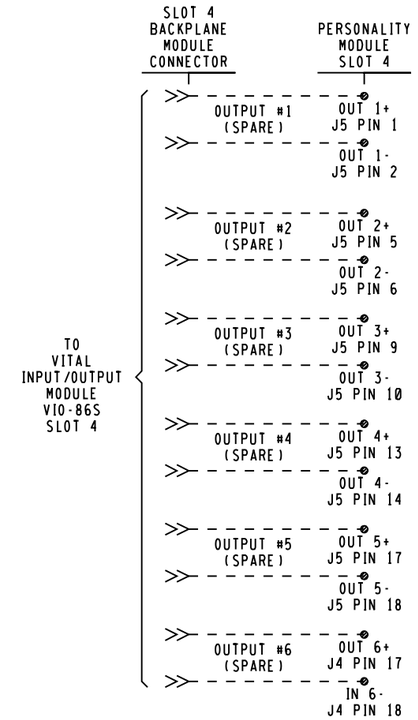

NOTES
1. ALL WIRE THIS SHEET #16 AWG UNLESS NOTED.
2. APPROACH DISABLE JUMPER INPUT. THIS INPUT IS USED IN COMBINATION WITH THE SOFT APPROACH DISABLE ACCESSED THROUGH THE CDU-1 KEYPAD. BOTH BITS MUST BE HIGH TO DISABLE AN APPROACH. THE OPERATOR IS SOLELY RESPONSIBLE FOR CROSSING PROTECTION WHEN THE APPROACH DISABLE FUNCTION IS ACTIVATED.

REMOTE CROSSING (71CWU)
6'X 6' HOUSE

FIELD SET
03/19/13

NEW WORK

GE TRANSPORTATION
INTELLIGENT CONTROL SYSTEMS
Jacksonville, Florida
CSX PROJ #:IL2011037A DATE:01-29-13
DESIGNED BY:SAT CHECKED BY:DPL

CSX TRANSPORTATION
RAIL TRANSPORT GROUP ENGINEERING
COMMUNICATIONS AND SIGNALS

CP FRANCISCO

XP4 71CWU MODULE CONNECTOR USAGE
BLUE ISLAND, IL M.P. DIH 15.40

C4R-3.C01
REV. 12-12-11

DESIGNED	DIGITIZED	CHECKED	DATE
GET/DLK	GET/SAT	GET/FAP	08-25-12

DESIGN DATE	REV. NO.	DRAWING	SHEET NO	FILE	SHEET
08-25-12	5	-----	-----	DIH01540	C36