3000 GCP APPLICATION DESIGN CARD

EQUIPMENT: 3000 ☐ 3000ND ☐ 3000D2 ■ 3000ND2 ☐

ISLAND FREQUENCY: T1: N/A KHZ T2: N/A KHZ — 80-1 CWU

SOFTWARE LEVEL (DISPLAYED DURING BOOT-UP)		☆☆	
NUMBER OF TRACKS (NUMBER OF TRANSCEIVER MODULES, 1 OR 2)		1 ☐	2 ■
FREQUENCY (MS/GCP)	T1:	211	HZ
	T2:	285	HZ
UNIDIRECTIONAL / BIDIRECTIONAL	T1:	UNI ■	BI ☐
	T2:	UNI ■	BI ☐
XMIT LEVEL	T1:	HI ☐	MED ■
	T2:	HI ☐	MED ■
PREDICTOR/MOTION SENSOR	T1:	PRED ☐	MS ■
	T2:	PRED ☐	MS ■
WARNING TIME SELECTED	T1:	99	SEC.
	T2:	99	SEC.
APPROACH DISTANCE SELECTED	T1:	2039	FT.
	T2:	1426	FT.
APPROACH DISTANCE COMPUTED	T1:	NOT REQUIRED *	
	T2:	NOT REQUIRED *	
UAX PICKUP DELAY (UAX1) (0 = OFF)		0	SEC.
ENA/UAX2 DELAY (0 = ENA)		0	SEC.
ISLAND DISTANCE (BETWEEN FEED WIRES)	T1:	0 ☆	FT.
	T2:	0 ☆	FT.
NUMBER OF DAX'S		0 ☐ 1 ☐ 2 ■ 3 ☐ 4 ■	
DAX A TRACK ASSIGNMENT		T1 ■	T2 ☐
DAX A DISTANCE (0 = PREEMPT)		352	FT.
DAX A WARNING TIME		33	SEC.
DAX B TRACK ASSIGNMENT		T1 ☐	T2 ■
DAX B DISTANCE (0 = PREEMPT)		1024	FT.
DAX B WARNING TIME		32	SEC.
DAX C TRACK ASSIGNMENT		T1 ■	T2 ☐
DAX C DISTANCE (0 = PREEMPT)		03483	FT.
DAX C WARNING TIME		60	SEC.
DAX D TRACK ASSIGNMENT		T1 ☐	T2 ■
DAX D DISTANCE (0 = PREEMPT)		03483	FT.
DAX D WARNING TIME		60	SEC.
SLAVING MASTER/SLAVE		MASTER ■	SLAVE ☐
PASSWORD ENABLED		DISABLED ■	ENABLED ☐
RECORDER INSTALLED		NOT INSTALLED ■	INSTALLED ☐
RS-232-C BAUD RATE			BPS
RS-232-C DATE BITES		7 ☐	8 ☐
RS-232-C STOP BITS		1 ☐	2 ☐
RS-232-C PARITY		NONE ☐	MARK ☐
		ODD ☐ EVEN ☐	SPACE ☐
DATE (E.G., MON 13 MAY 1991)		NOT REQUIRED *	
TIME (E.G., 06,25,43 PM)		NOT REQUIRED *	
DAYLIGHT SAVINGS		ON ☐	OFF ■

EXPANDED PROGRAMMING DESIGN

SWITCH TO MS (ENTER EZ VALUE)	T1:	10	EZ
	T2:	10	EZ
TRANSFER DELAY MS TO GCP (0 = OFF)	T1:	0	SEC.
	T2:	0	SEC.
PRIME PREDICTION OFFSET (0 = OFF)	T1:	0	FT.
	T2:	0	FT.
PICKUP DELAY PRIME		0	SEC.
PICKUP DELAY DAX A		8	SEC.
PICKUP DELAY DAX B		18	SEC.
PICKUP DELAY DAX C		0	SEC.
PICKUP DELAY DAX D		0	SEC.
COMPENSATION VALUE	T1:	NOT REQUIRED **	
COMPENSATION VALUE	T2:	NOT REQUIRED **	
ENHANCED DETECTION (ED)	T1:	ON ☐	OFF ■
	T2:	ON ☐	OFF ■
BACK TO BACK T1 AND T2 (WHEN ED IS ON)		NO ☐	YES ■
STATION STOP TIMER (WHEN ED IS ON)	T1:	N/A (SEE NOTE1)	SEC.
	T2:	N/A (SEE NOTE1)	SEC.
# OF TRACK WIRES - 4 OR 6	T1:	4 ■	6 ☐
	T2:	4 ■	6 ☐
LOW EX ADJUSTMENT	T1:	0	
	T2:	0	
LOW EZ DETECTION	T1:	ON ☐	OFF ■
	T2:	ON ☐	OFF ■
LOW EZ DETECTION TIMER	T1:	N/A (SEE NOTE2)	MIN.
	T2:	N/A (SEE NOTE2)	MIN.
POSITIVE START (0 = OFF) (ENTER EZ VALUE)	T1:	0	EZ
	T2:	0	EZ
POSITIVE START TIMEOUT (0 = NONE) (WHEN POTISIVE START IS ON)	T1:	0	MIN.
	T2:	0	MIN.
SET AT OPERATION		NORMAL ■	DIAGNOSTIC ☐
DIAGNOSTIC MESSAGES		ON ☐	OFF ■
DAX MESSAGES		ON ☐	OFF ■
ADVANCE PREEMP TIMER (0 = OFF)		0	SEC.

** THE COMPENSATION VALUE IS PROVIDED BY THE 3000 GCP SYSTEM AND NO ADDITIONAL PROGRAMMING IS NORMALLY REQUIRED.

THIS PLAN ☐ DOES ☒ DOES NOT SUPERSEDES PLANS DATED,

IL2006019 / 10-25-10

* PROGRAMMED AT INSTALLATION DURING CALIBRATION PROCEDURE

☆ = 120' MINIMUM ISLAND DISTANCE TO BE ENTERED BY FIELD PERSONNEL FOR NON-DAXING APPLICATIONS WHEN ROAD IS 20' OR LESS WIDE.

☆☆ = INDICATE ON AS-IN-SERVICE DRAWINGS

FIELD REVISION
SAT/DPL
08/08/13

= IN
= OUT
= EXISTING
= NOTE

= IN
= OUT

GE TRANSPORTATION
INTELLIGENT CONTROL SYSTEMS
Jacksonville, Florida

CSX PROJ #, IL2011037A DATE, 01-29-13
DESIGNED BY, SAT CHECKED BY, DPL

NOTES,

1. WHEN ED SET TO OFF, DEFAULT NOT DISPLAYED
   WHEN ED SET TO ON, DEFAULT IS 10 SEC.
2. WHEN LOW EZ DETECTION SET TO OFF, DEFAULT NOT DISPLAYED
   WHEN LOW EZ DETECTION SET TO ON, DEFAULT IS 10 MIN.

LOCATION A

CSX TRANSPORTATION
RAIL TRANSPORT GROUP ENGINEERING
COMMUNICATIONS AND SIGNALS

VERMONT STREET

80-1CWU DETECTION DEVICE PROGRAM
BLUE ISLAND, IL M.P. DC-15.48

3000D2.C02
REV. 05-06-05

DESIGNED	DIGITIZED	CHECKED	DATE
XRL	XRL	XRL	10-25-10

DESIGN DATE	REV. NO.	DRAWING	SHEET NO	FILE	SHEET
10-25-10	2 1	-----	-----	DC01548	C19

01-29-13

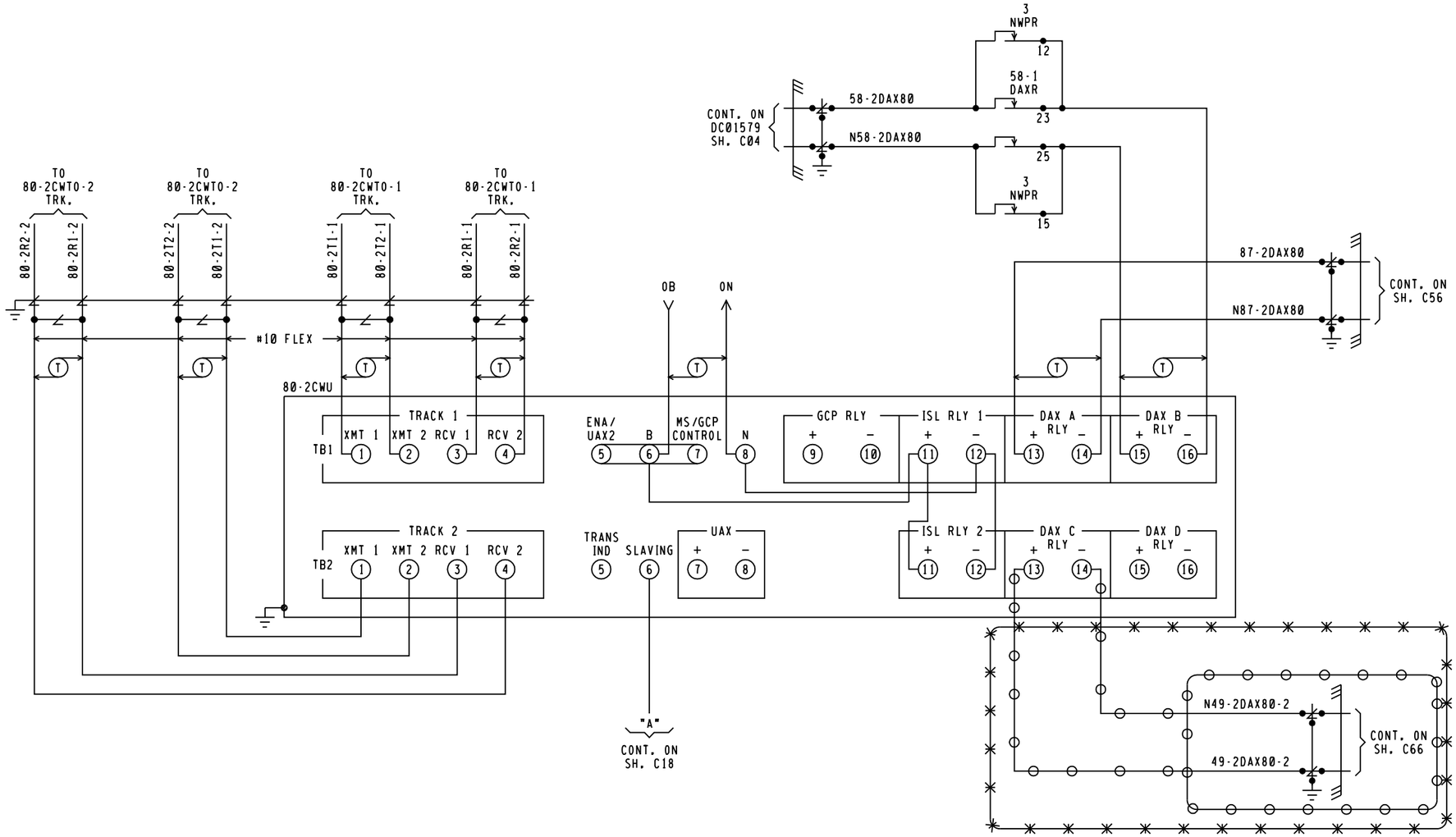

80-2CWU
3000D2 MODULES REQUIRED

M1	M2	M3	M4	M5	M6	M7	M8	M9	M10
80211 IPI ISLAND (NOT USED)	80211 IPI ISLAND (NOT USED)	80012 TRANSCEIVER	80012 TRANSCEIVER	80013 RELAY DRIVE	80214 PROCESSOR	80115 RECORDER (NOT USED)	80016 DAX	80016 DAX (NOT USED)	80020-1 CONTROL INTERFACE

M11	M12	M13	M14	M15	M16	M17	M18	M19	M20	M21
80211 IPI ISLAND (NOT USED)	80211 IPI ISLAND (NOT USED)	80012 TRANSCEIVER	80012 TRANSCEIVER	80013 RELAY DRIVE	80214 PROCESSOR	80115 RECORDER (NOT USED)	80016 DAX	80016 DAX (NOT USED)	80020-2 CONTROL INTERFACE	80028 TRANSFER TIMER

FRONT VIEW

FIELD TO MOVE DAX C WIRES FROM 80-2CWU TO DAX D OUTPUT ON 80-1CWU

FIELD REVISION
SAT/DPL
08/08/13
= IN
= OUT
= EXISTING
= NOTE

THIS PLAN ☐ DOES ☒ DOES NOT SUPERSEDES PLANS DATED,

IL2006019 / 10-25-10

= IN
= OUT

IPI
MODULE 80211

SLOT M1 & M11
NOT USED

IPI
MODULE 80211

SLOT M2 & M12
NOT USED

MODULE 80028
S4 DIP SWITCH POSITIONS *

SWITCH #	16	8	4	2	1
SWITCH POSITION	UP	DOWN	UP	DOWN	UP

*MAY BE SET PER FIELD CONDITIONS

MODULE 80028
S1 DIP SWITCH POSITIONS

SWITCH #	A	B	C	D
DAX USED	LEFT	LEFT	RIGHT	RIGHT

LEFT INDICATES DAX USED

GE TRANSPORTATION
INTELLIGENT CONTROL SYSTEMS
Jacksonville, Florida
CSX PROJ #, IL2011037A DATE, 01-29-13
DESIGNED BY, SAT CHECKED BY, DPL

LOCATION A

CSX TRANSPORTATION
RAIL TRANSPORT GROUP ENGINEERING
COMMUNICATIONS AND SIGNALS

VERMONT STREET

80-2CWU DETECTION DEVICE CIRCUITRY
BLUE ISLAND, IL M.P. DC-15.48

3000D2.C01
REV. 05-06-05

DESIGNED	DIGITIZED	CHECKED	DATE
XRL	XRL	XRL	10-25-10

DESIGN DATE	REV. NO.	DRAWING	SHEET NO	FILE	SHEET
10-25-10	2 1	-----	-----	DC01548	C20

01-29-13

3000 GCP APPLICATION DESIGN CARD

EQUIPMENT: 3000 ☐ 3000ND ☐ 3000D2 ■ 3000ND2 ☐

ISLAND FREQUENCY: T1: N/A KHZ T2: N/A KHZ — 80-2 CWU

SOFTWARE LEVEL (DISPLAYED DURING BOOT-UP)		☆☆	
NUMBER OF TRACKS (NUMBER OF TRANSCEIVER MODULES, 1 OR 2)		1 ☐	2 ■
FREQUENCY (MS/GCP)	T1:	211	HZ
	T2:	285	HZ
UNIDIRECTIONAL / BIDIRECTIONAL	T1:	UNI ■	BI ☐
	T2:	UNI ■	BI ☐
XMIT LEVEL	T1:	HI ☐	MED ■
	T2:	HI ☐	MED ■
PREDICTOR/MOTION SENSOR	T1:	PRED ☐	MS ■
	T2:	PRED ☐	MS ■
WARNING TIME SELECTED	T1:	99	SEC.
	T2:	99	SEC.
APPROACH DISTANCE SELECTED	T1:	2039	FT.
	T2:	1426	FT.
APPROACH DISTANCE COMPUTED	T1:	NOT REQUIRED *	
	T2:	NOT REQUIRED *	
UAX PICKUP DELAY (UAX1) (0 = OFF)		0	SEC.
ENA/UAX2 DELAY (0 = ENA)		0	SEC.
ISLAND DISTANCE (BETWEEN FEED WIRES)	T1:	0 ☆	FT.
	T2:	0 ☆	FT.
NUMBER OF DAX'S		0 ☐ 1 ☐ 2 ■ 3 ☐ 4 ☐	
DAX A TRACK ASSIGNMENT		T1 ■	T2 ☐
DAX A DISTANCE (0 = PREEMPT)		352	FT.
DAX A WARNING TIME		33	SEC.
DAX B TRACK ASSIGNMENT		T1 ☐	T2 ■
DAX B DISTANCE (0 = PREEMPT)		1024	FT.
DAX B WARNING TIME		32	SEC.
DAX C TRACK ASSIGNMENT		T1 ■	T2 ☐
DAX C DISTANCE (0 = PREEMPT)		34830	FT.
DAX C WARNING TIME		60	SEC.
DAX D TRACK ASSIGNMENT		T1 ☐	T2 ☐
DAX D DISTANCE (0 = PREEMPT)			FT.
DAX D WARNING TIME			SEC.
SLAVING MASTER/SLAVE		MASTER ☐	SLAVE ■
PASSWORD ENABLED		DISABLED ■	ENABLED ☐
RECORDER INSTALLED		NOT INSTALLED ■	INSTALLED ☐
RS-232-C BAUD RATE			BPS
RS-232-C DATE BITES		7 ☐	8 ☐
RS-232-C STOP BITS		1 ☐	2 ☐
RS-232-C PARITY		NONE ☐	MARK ☐
		ODD ☐ EVEN ☐	SPACE ☐
DATE (E.G., MON 13 MAY 1991)		NOT REQUIRED *	
TIME (E.G., 06,25,43 PM)		NOT REQUIRED *	
DAYLIGHT SAVINGS		ON ☐	OFF ■

EXPANDED PROGRAMMING DESIGN

SWITCH TO MS (ENTER EZ VALUE)	T1:	10	EZ
	T2:	10	EZ
TRANSFER DELAY MS TO GCP (0 = OFF)	T1:	0	SEC.
	T2:	0	SEC.
PRIME PREDICTION OFFSET (0 = OFF)	T1:	0	FT.
	T2:	0	FT.
PICKUP DELAY PRIME		0	SEC.
PICKUP DELAY DAX A		8	SEC.
PICKUP DELAY DAX B		18	SEC.
PICKUP DELAY DAX C		0	SEC.
PICKUP DELAY DAX D		0	SEC.
COMPENSATION VALUE	T1:	NOT REQUIRED **	
COMPENSATION VALUE	T2:	NOT REQUIRED **	
ENHANCED DETECTION (ED)	T1:	ON ☐	OFF ■
	T2:	ON ☐	OFF ■
BACK TO BACK T1 AND T2 (WHEN ED IS ON)		NO ☐	YES ■
STATION STOP TIMER (WHEN ED IS ON)	T1:	N/A (SEE NOTE1)	SEC.
	T2:	N/A (SEE NOTE1)	SEC.
# OF TRACK WIRES - 4 OR 6	T1:	4 ■	6 ☐
	T2:	4 ■	6 ☐
LOW EX ADJUSTMENT	T1:	0	
	T2:	0	
LOW EZ DETECTION	T1:	ON ☐	OFF ■
	T2:	ON ☐	OFF ■
LOW EZ DETECTION TIMER	T1:	N/A (SEE NOTE2)	MIN.
	T2:	N/A (SEE NOTE2)	MIN.
POSITIVE START (0 = OFF) (ENTER EZ VALUE)	T1:	0	EZ
	T2:	0	EZ
POSITIVE START TIMEOUT (0 = NONE) (WHEN POTISIVE START IS ON)	T1:	0	MIN.
	T2:	0	MIN.
SET AT OPERATION		NORMAL ■	DIAGNOSTIC ☐
DIAGNOSTIC MESSAGES		ON ☐	OFF ■
DAX MESSAGES		ON ☐	OFF ■
ADVANCE PREEMP TIMER (0 = OFF)		0	SEC.

** THE COMPENSATION VALUE IS PROVIDED BY THE 3000 GCP SYSTEM AND NO ADDITIONAL PROGRAMMING IS NORMALLY REQUIRED.

* PROGRAMMED AT INSTALLATION DURING CALIBRATION PROCEDURE

☆ = 120' MINIMUM ISLAND DISTANCE TO BE ENTERED BY FIELD PERSONNEL FOR NON-DAXING APPLICATIONS WHEN ROAD IS 20' OR LESS WIDE.

☆☆ = INDICATE ON AS-IN-SERVICE DRAWINGS

NOTES:

1. WHEN ED SET TO OFF, DEFAULT NOT DISPLAYED
   WHEN ED SET TO ON, DEFAULT IS 10 SEC.
2. WHEN LOW EZ DETECTION SET TO OFF, DEFAULT NOT DISPLAYED
   WHEN LOW EZ DETECTION SET TO ON, DEFAULT IS 10 MIN.

THIS PLAN ☐ DOES ☒ DOES NOT SUPERSEDES PLANS DATED,

IL2006019 / 10-25-10

FIELD REVISION
SAT/DPL
08/08/13
= IN
= OUT
= EXISTING
= NOTE

= IN
= OUT

GE TRANSPORTATION
INTELLIGENT CONTROL SYSTEMS
Jacksonville, Florida
CSX PROJ #, IL2011037A DATE, 01-29-13
DESIGNED BY, SAT CHECKED BY, DPL

LOCATION A

CSX TRANSPORTATION
RAIL TRANSPORT GROUP ENGINEERING
COMMUNICATIONS AND SIGNALS

VERMONT STREET

80-2CWU DETECTION DEVICE PROGRAM
BLUE ISLAND, IL M.P. DC-15.48

3000D2.C02
REV. 05-06-05

DESIGNED	DIGITIZED	CHECKED	DATE
XRL	XRL	XRL	10-25-10

01-29-13	DESIGN DATE	REV. NO.	DRAWING	SHEET NO	FILE	SHEET
	10-25-10	2 1	-----	-----	DC01548	C21

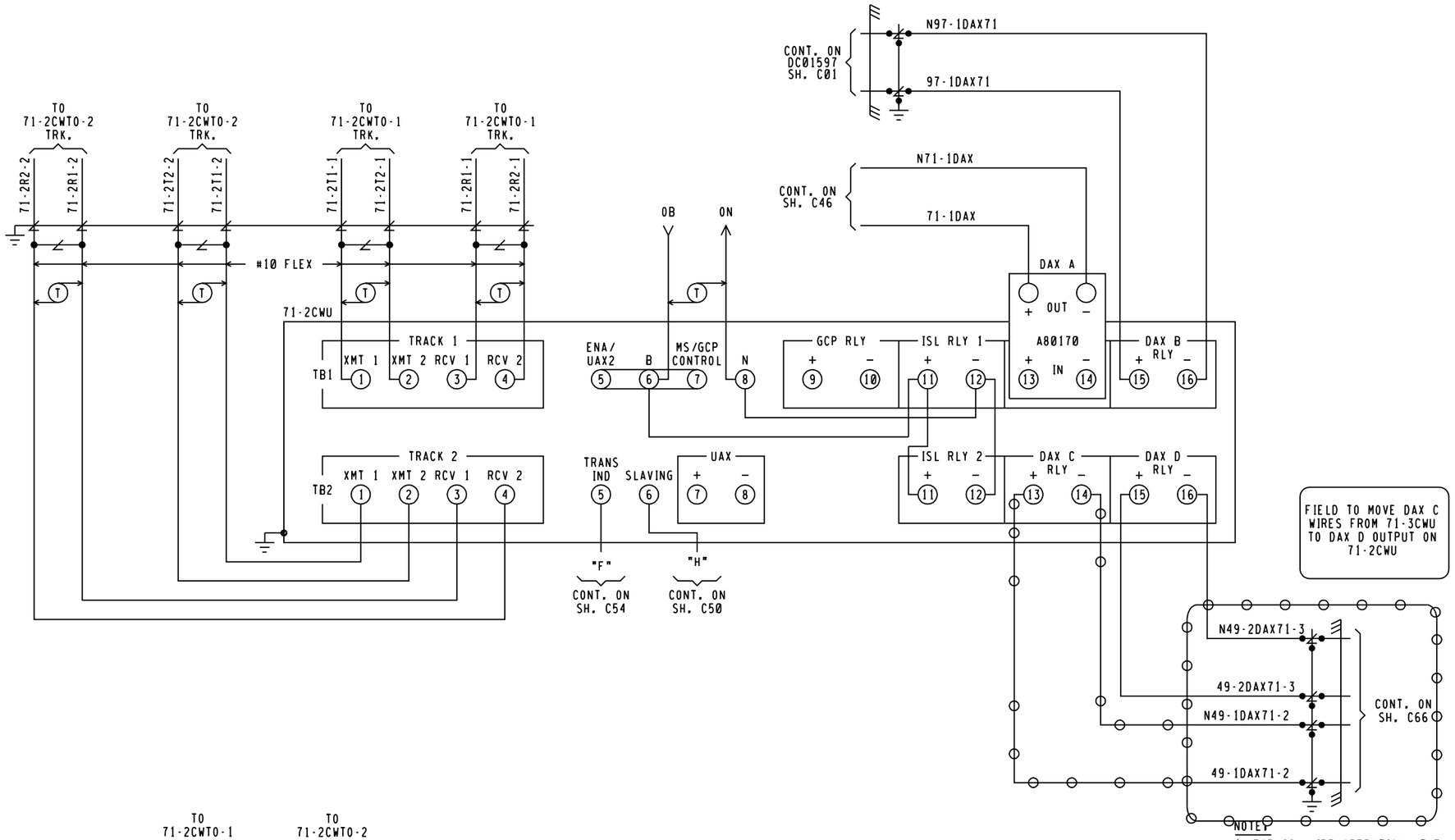

FIELD TO MOVE DAX C WIRES FROM 71-3CWU TO DAX D OUTPUT ON 71-2CWU

71-2CWU
3000D2 MODULES REQUIRED

80211 IPI ISLAND (NOT USED)	80211 IPI ISLAND (NOT USED)	80012 TRANSCEIVER	80012 TRANSCEIVER	80013 RELAY DRIVE	80214 PROCESSOR	80115 RECORDER (NOT USED)	80016 DAX	80016 DAX (NOT USED)	80020-1 CONTROL INTERFACE	
M1	M2	M3	M4	M5	M6	M7	M8	M9	M10	

80211 IPI ISLAND (NOT USED)	80211 IPI ISLAND (NOT USED)	80012 TRANSCEIVER	80012 TRANSCEIVER	80013 RELAY DRIVE	80214 PROCESSOR	80115 RECORDER (NOT USED)	80016 DAX	80016 DAX (NOT USED)	80020-2 CONTROL INTERFACE	80028 TRANSFER TIMER
M11	M12	M13	M14	M15	M16	M17	M18	M19	M20	M21

FRONT VIEW

NOTES

1. FOR SIX WIRE OPERATION, THE JUMPER LINKS CONNECTING TB3-1 AND 2 AND TB3-3 AND 4 SHOULD BE REMOVED FOR TRACK NUMBER 1 AND A SHORT LENGTH OF STRANDED TWISTED PAIR WIRE CONNECTED TO TERMINALS TB3-1 AND TB3-3. THE TWISTED PAIR WIRE IS THEN ROUTED THROUGH THE EXIT HOLE IN THE SIDE OF THE CASE AND TERMINATED AT AAR TERMINALS. A NUMBER 10 AWG TWISTED PAIR CAN THEN BE USED FOR INTERCONNECTING THE TRACK ARRESTERS.
2. FOR SIX WIRE OPERATION, THE JUMPER LINKS CONNECTING TB4-1 AND 2 AND TB4-3 AND 4 SHOULD BE REMOVED FOR TRACK NUMBER 2 AND A SHORT LENGTH OF STRANDED TWISTED PAIR WIRE CONNECTED TO TERMINALS TB4-1 AND TB4-3. THE TWISTED PAIR WIRE IS THEN ROUTED THROUGH THE EXIT HOLE IN THE SIDE OF THE CASE AND TERMINATED AT AAR TERMINALS. A NUMBER 10 AWG TWISTED PAIR CAN THEN BE USED FOR INTERCONNECTING THE TRACK ARRESTERS.

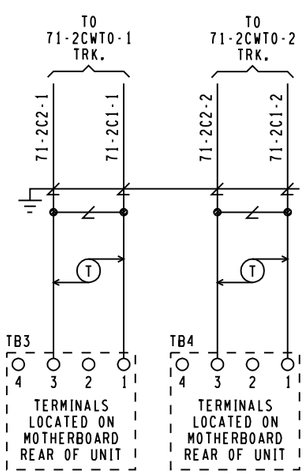

IPI
MODULE 80211

SLOT M1 & M11
NOT USED

IPI
MODULE 80211

SLOT M2 & M12
NOT USED

THIS PLAN ☐ DOES ☒ DOES NOT SUPERSEDES PLANS DATED,

IL2006019 / 10-25-10

MODULE 80028
S4 DIP SWITCH POSITIONS *

SWITCH #	16	8	4	2	1
SWITCH POSITION	UP	DOWN	UP	DOWN	UP

* MAY BE SET PER FIELD CONDITIONS

MODULE 80028
S1 DIP SWITCH POSITIONS

SWITCH #	A	B	C	D
DAX USED	LEFT	LEFT	RIGHT	RIGHT

LEFT INDICATES DAX USED

LEFT

FIELD REVISION
SAT/DPL
LEFT 08/08/13
= IN
= OUT
= EXISTING
= NOTE

= IN
= OUT

GE TRANSPORTATION
INTELLIGENT CONTROL SYSTEMS
Jacksonville, Florida
CSX PROJ #, IL2011037A DATE, 01-29-13
DESIGNED BY, SAT CHECKED BY, DPL

3000D2.C01
REV. 05-06-05

8'X8' CROSSING HOUSE

CSX TRANSPORTATION
RAIL TRANSPORT GROUP ENGINEERING
COMMUNICATIONS AND SIGNALS

VERMONT STREET
UNION STREET (163418D CSX TRACKS)
71-2CWU CROSSING DETECTION CIRCUITRY
BLUE ISLAND, IL M.P. DC-15.71

DESIGNED	DIGITIZED	CHECKED	DATE
XRL	XRL	XRL	10-25-10

01-29-13	DESIGN DATE	REV. NO.	DRAWING	SHEET NO	FILE	SHEET
	10-25-10	2 1	-----	-----	DC01548	C48

3000 GCP APPLICATION DESIGN CARD

EQUIPMENT: 3000 ☐ 3000ND ☐ 3000D2 ■ 3000ND2 ☐

ISLAND FREQUENCY: T1: N/A KHZ T2: N/A KHZ — 71-2 CWU

SOFTWARE LEVEL (DISPLAYED DURING BOOT-UP)		☆☆	
NUMBER OF TRACKS (NUMBER OF TRANSCEIVER MODULES, 1 OR 2)		1 ☐	2 ■
FREQUENCY (MS/GCP)	T1:	348	HZ
	T2:	645	HZ
UNIDIRECTIONAL / BIDIRECTIONAL	T1:	UNI ☐	BI ■
	T2:	UNI ■	BI ☐
XMIT LEVEL	T1:	HI ☐	MED ■
	T2:	HI ☐	MED ■
PREDICTOR/MOTION SENSOR	T1:	PRED ■	MS ☐
	T2:	PRED ■	MS ☐
WARNING TIME SELECTED	T1:	99	SEC.
	T2:	99	SEC.
APPROACH DISTANCE SELECTED	T1:	2100	FT.
	T2:	961	FT.
APPROACH DISTANCE COMPUTED	T1:	NOT REQUIRED *	
	T2:	NOT REQUIRED *	
UAX PICKUP DELAY (UAX1) (0 = OFF)		0	SEC.
ENA/UAX2 DELAY (0 = ENA)		0	SEC.
ISLAND DISTANCE (BETWEEN FEED WIRES)	T1:	0	FT.
	T2:	0	FT.
NUMBER OF DAX'S		0 ☐ 1 ☐ 2 ■ 3 ☐ 4 ■	
DAX A TRACK ASSIGNMENT		T1 ■	T2 ☐
DAX A DISTANCE (0 = PREEMPT)		232	FT.
DAX A WARNING TIME		32	SEC.
DAX B TRACK ASSIGNMENT		T1 ☐	T2 ■
DAX B DISTANCE (0 = PREEMPT)		983	FT.
DAX B WARNING TIME		30	SEC.
DAX C TRACK ASSIGNMENT		T1 ■	T2 ☐
DAX C DISTANCE (0 = PREEMPT)		3650	FT.
DAX C WARNING TIME		60	SEC.
DAX D TRACK ASSIGNMENT		T1 ☐	T2 ■
DAX D DISTANCE (0 = PREEMPT)		3650	FT.
DAX D WARNING TIME		60	SEC.
SLAVING MASTER/SLAVE		MASTER ■	SLAVE ☐
PASSWORD ENABLED		DISABLED ■	ENABLED ☐
RECORDER INSTALLED		NOT INSTALLED ■	INSTALLED ☐
RS-232-C BAUD RATE			BPS
RS-232-C DATE BITES		7 ☐	8 ☐
RS-232-C STOP BITS		1 ☐	2 ☐
RS-232-C PARITY		NONE ☐	MARK ☐
		ODD ☐ EVEN ☐	SPACE ☐
DATE (E.G., MON 13 MAY 1991)		NOT REQUIRED *	
TIME (E.G., 06,25,43 PM)		NOT REQUIRED *	
DAYLIGHT SAVINGS		ON ☐	OFF ■

EXPANDED PROGRAMMING DESIGN

SWITCH TO MS (ENTER EZ VALUE)	T1:	10	EZ
	T2:	10	EZ
TRANSFER DELAY MS TO GCP (0 = OFF)	T1:	0	SEC.
	T2:	0	SEC.
PRIME PREDICTION OFFSET (0 = OFF)	T1:	0	FT.
	T2:	0	FT.
PICKUP DELAY PRIME		0	SEC.
PICKUP DELAY DAX A		8	SEC.
PICKUP DELAY DAX B		17	SEC.
PICKUP DELAY DAX C		0	SEC.
PICKUP DELAY DAX D		0	SEC.
COMPENSATION VALUE	T1:	NOT REQUIRED **	
COMPENSATION VALUE	T2:	NOT REQUIRED **	
ENHANCED DETECTION (ED)	T1:	ON ☐	OFF ■
	T2:	ON ☐	OFF ■
BACK TO BACK T1 AND T2 (WHEN ED IS ON)		NO ☐	YES ■
STATION STOP TIMER (WHEN ED IS ON)	T1:	N/A (SEE NOTE1)	SEC.
	T2:	N/A (SEE NOTE1)	SEC.
# OF TRACK WIRES - 4 OR 6	T1:	4 ☐	6 ■
	T2:	4 ☐	6 ■
LOW EX ADJUSTMENT	T1:	0	
	T2:	0	
LOW EZ DETECTION	T1:	ON ☐	OFF ■
	T2:	ON ☐	OFF ■
LOW EZ DETECTION TIMER	T1:	N/A (SEE NOTE2)	MIN.
	T2:	N/A (SEE NOTE2)	MIN.
POSITIVE START (0 = OFF) (ENTER EZ VALUE)	T1:	0	EZ
	T2:	0	EZ
POSITIVE START TIMEOUT (0 = NONE) (WHEN POTISIVE START IS ON)	T1:	0	MIN.
	T2:	0	MIN.
SET AT OPERATION		NORMAL ■	DIAGNOSTIC ☐
DIAGNOSTIC MESSAGES		ON ☐	OFF ■
DAX MESSAGES		ON ☐	OFF ■
ADVANCE PREEMP TIMER (0 = OFF)		0	SEC.

** THE COMPENSATION VALUE IS PROVIDED BY THE 3000 GCP SYSTEM AND NO ADDITIONAL PROGRAMMING IS NORMALLY REQUIRED.

THIS PLAN ☐ DOES ☒ DOES NOT SUPERSEDES PLANS DATED.

IL2006019 / 10-25-10

* PROGRAMMED AT INSTALLATION DURING CALIBRATION PROCEDURE

☆ = 120' MINIMUM ISLAND DISTANCE TO BE ENTERED BY FIELD PERSONNEL FOR NON-DAXING APPLICATIONS WHEN ROAD IS 20' OR LESS WIDE.

☆☆ = INDICATE ON AS-IN-SERVICE DRAWINGS

FIELD REVISION
SAT/DPL
08/08/13

= IN
= OUT
= EXISTING
= NOTE

NOTES.

1. WHEN ED SET TO OFF, DEFAULT NOT DISPLAYED WHEN ED SET TO ON, DEFAULT IS 10 SEC.
2. WHEN LOW EZ DETECTION SET TO OFF, DEFAULT NOT DISPLAYED WHEN LOW EZ DETECTION SET TO ON, DEFAULT IS 10 MIN.

= IN
= OUT

GE TRANSPORTATION
INTELLIGENT CONTROL SYSTEMS
Jacksonville, Florida
CSX PROJ #, IL2011037A DATE, 01-29-13
DESIGNED BY, SAT CHECKED BY, DPL

3000D2.C02
REV. 05-06-05

8'X8' CROSSING HOUSE

CSX TRANSPORTATION
RAIL TRANSPORT GROUP ENGINEERING
COMMUNICATIONS AND SIGNALS

VERMONT STREET
UNION STREET (163418D CSX TRACKS)
71-2CWU DETECTION DEVICE PROGRAM
BLUE ISLAND, IL M.P. DC-15.71

DESIGNED	DIGITIZED	CHECKED	DATE
XRL	XRL	XRL	10-25-10

DESIGN DATE	REV. NO.	DRAWING	SHEET NO	FILE	SHEET
10-25-10	2 1	-----	-----	DC01548	C49

01-29-13

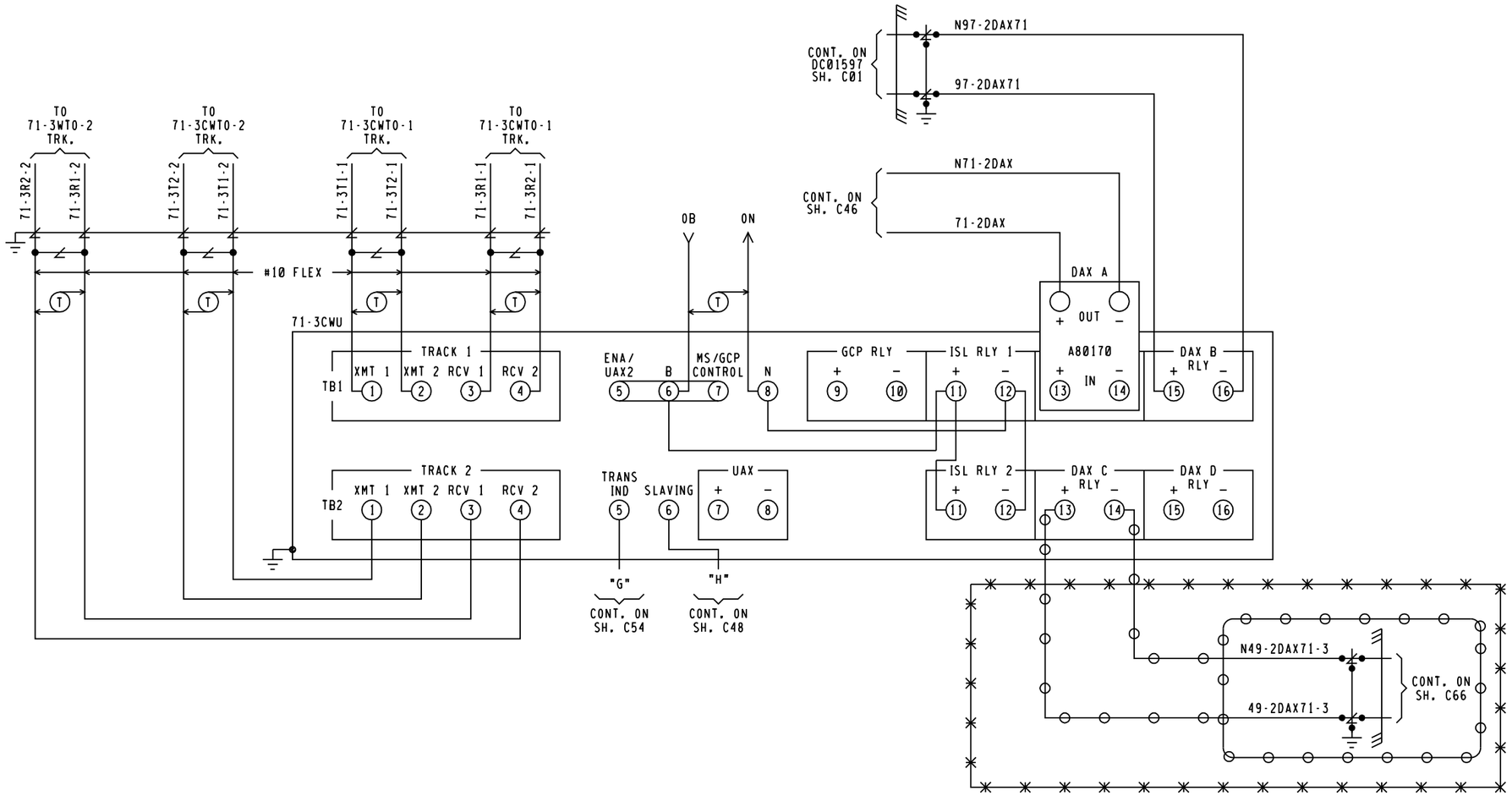

71-3CWU
3000D2 MODULES REQUIRED

80211 IPI ISLAND (NOT USED)	80211 IPI ISLAND (NOT USED)	80012 TRANSCEIVER	80012 TRANSCEIVER	80013 RELAY DRIVE	80214 PROCESSOR	80115 RECORDER (NOT USED)	80016 DAX	80016 DAX (NOT USED)	80020-1 CONTROL INTERFACE	
M1	M2	M3	M4	M5	M6	M7	M8	M9	M10	

80211 IPI ISLAND (NOT USED)	80211 IPI ISLAND (NOT USED)	80012 TRANSCEIVER	80012 TRANSCEIVER	80013 RELAY DRIVE	80214 PROCESSOR	80115 RECORDER (NOT USED)	80016 DAX	80016 DAX (NOT USED)	80020-2 CONTROL INTERFACE	80028 TRANSFER TIMER
M11	M12	M13	M14	M15	M16	M17	M18	M19	M20	M21

FRONT VIEW

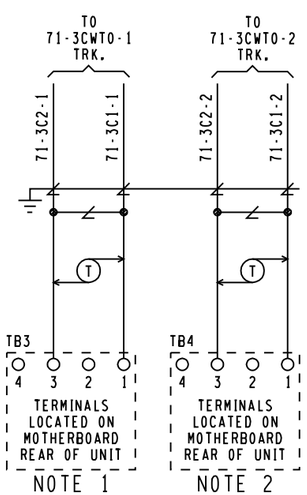

IPI
MODULE 80211

SLOT M1 & M11
NOT USED

IPI
MODULE 80211

SLOT M2 & M12
NOT USED

THIS PLAN ☐ DOES ☒ DOES NOT SUPERSEDES PLANS DATED,

IL2006019 / 10-25-10

NOTE,

1. FOR SIX WIRE OPERATION, THE JUMPER LINKS CONNECTING TB3-1 AND 2 AND TB3-3 AND 4 SHOULD BE REMOVED FOR TRACK NUMBER 1 AND A SHORT LENGTH OF STRANDED TWISTED PAIR WIRE CONNECTED TO TERMINALS TB3-1 AND TB3-3 . THE TWISTED PAIR WIRE IS THEN ROUTED THROUGH THE EXIT HOLE IN THE SIDE OF THE CASE AND TERMINATED AT AAR TERMINALS. A NUMBER 10 AWG TWISTED PAIR CAN THEN BE USED FOR INTERCONNECTING THE TRACK ARRESTERS.
2. FOR SIX WIRE OPERATION, THE JUMPER LINKS CONNECTING TB4-1 AND 2 AND TB4-3 AND 4 SHOULD BE REMOVED FOR TRACK NUMBER 2 AND A SHORT LENGTH OF STRANDED TWISTED PAIR WIRE CONNECTED TO TERMINALS TB4-1 AND TB4-3. THE TWISTED PAIR WIRE IS THEN ROUTED THROUGH THE EXIT HOLE IN THE SIDE OF THE CASE AND TERMINATED AT AAR TERMINALS. A NUMBER 10 AWG TWISTED PAIR CAN THEN BE USED FOR INTERCONNECTING THE TRACK ARRESTERS.

MODULE 80028
S4 DIP SWITCH POSITIONS *

SWITCH #	16	8	4	2	1
SWITCH POSITION	UP	DOWN	UP	DOWN	UP

*MAY BE SET PER FIELD CONDITIONS

MODULE 80028
S1 DIP SWITCH POSITIONS

SWITCH #	A	B	C	D
DAX USED	LEFT	LEFT	RIGHT	RIGHT

LEFT INDICATES DAX USED

FIELD REVISION
SAT/DPL
08/08/13
= IN
= OUT
= EXISTING
= NOTE

= IN
= OUT

GE TRANSPORTATION
INTELLIGENT CONTROL SYSTEMS
Jacksonville, Florida
CSX PROJ #, IL2011037A DATE, 01-29-13
DESIGNED BY, SAT CHECKED BY, DPL

3000D2.C01
REV. 05-06-05

8'X8' CROSSING HOUSE

CSX TRANSPORTATION
RAIL TRANSPORT GROUP ENGINEERING
COMMUNICATIONS AND SIGNALS

VERMONT STREET
UNION STREET (163418D CSX TRACKS)
71-3CWU CROSSING DETECTION CIRCUITRY
BLUE ISLAND, IL M.P. DC-15.71

DESIGNED	DIGITIZED	CHECKED	DATE
XRL	XRL	XRL	10-25-10

01-29-13	DESIGN DATE	REV. NO.	DRAWING	SHEET NO	FILE	SHEET
	10-25-10	2 1	-----	-----	DC01548	C50

3000 GCP APPLICATION DESIGN CARD

EQUIPMENT: 3000 ☐ 3000ND ☐ 3000D2 ■ 3000ND2 ☐

ISLAND FREQUENCY: T1: N/A KHZ T2: N/A KHZ — 71-3 CWU

SOFTWARE LEVEL (DISPLAYED DURING BOOT-UP)		☆☆	
NUMBER OF TRACKS (NUMBER OF TRANSCEIVER MODULES, 1 OR 2)		1 ☐	2 ■
FREQUENCY (MS/GCP)	T1:	348	HZ
	T2:	645	HZ
UNIDIRECTIONAL / BIDIRECTIONAL	T1:	UNI ☐	BI ■
	T2:	UNI ■	BI ☐
XMIT LEVEL	T1:	HI ☐	MED ■
	T2:	HI ☐	MED ■
PREDICTOR/MOTION SENSOR	T1:	PRED ■	MS ☐
	T2:	PRED ■	MS ☐
WARNING TIME SELECTED	T1:	99	SEC.
	T2:	99	SEC.
APPROACH DISTANCE SELECTED	T1:	2100	FT.
	T2:	961	FT.
APPROACH DISTANCE COMPUTED	T1:	NOT REQUIRED *	
	T2:	NOT REQUIRED *	
UAX PICKUP DELAY (UAX1) (0 = OFF)		0	SEC.
ENA/UAX2 DELAY (0 = ENA)		0	SEC.
ISLAND DISTANCE (BETWEEN FEED WIRES)	T1:	0	FT.
	T2:	0	FT.
NUMBER OF DAX'S		0 ☐ 1 ☐ 2 ■ 3 ■ 4 ☐	
DAX A TRACK ASSIGNMENT		T1 ■	T2 ☐
DAX A DISTANCE (0 = PREEMPT)		232	FT.
DAX A WARNING TIME		32	SEC.
DAX B TRACK ASSIGNMENT		T1 ☐	T2 ■
DAX B DISTANCE (0 = PREEMPT)		983	FT.
DAX B WARNING TIME		30	SEC.
DAX C TRACK ASSIGNMENT		T1 ☐	T2 ■
DAX C DISTANCE (0 = PREEMPT)		3650	FT.
DAX C WARNING TIME		60	SEC.
DAX D TRACK ASSIGNMENT		T1 ☐	T2 ☐
DAX D DISTANCE (0 = PREEMPT)			FT.
DAX D WARNING TIME			SEC.
SLAVING MASTER/SLAVE		MASTER ☐	SLAVE ■
PASSWORD ENABLED		DISABLED ■	ENABLED ☐
RECORDER INSTALLED		NOT INSTALLED ■	INSTALLED ☐
RS-232-C BAUD RATE			BPS
RS-232-C DATE BITES		7 ☐	8 ☐
RS-232-C STOP BITS		1 ☐	2 ☐
RS-232-C PARITY		NONE ☐	MARK ☐
		ODD ☐ EVEN ☐	SPACE ☐
DATE (E.G., MON 13 MAY 1991)		NOT REQUIRED *	
TIME (E.G., 06,25,43 PM)		NOT REQUIRED *	
DAYLIGHT SAVINGS		ON ☐	OFF ■

EXPANDED PROGRAMMING DESIGN

SWITCH TO MS (ENTER EZ VALUE)	T1:	10	EZ
	T2:	10	EZ
TRANSFER DELAY MS TO GCP (0 = OFF)	T1:	0	SEC.
	T2:	0	SEC.
PRIME PREDICTION OFFSET (0 = OFF)	T1:	0	FT.
	T2:	0	FT.
PICKUP DELAY PRIME		0	SEC.
PICKUP DELAY DAX A		8	SEC.
PICKUP DELAY DAX B		17	SEC.
PICKUP DELAY DAX C		0	SEC.
PICKUP DELAY DAX D		0	SEC.
COMPENSATION VALUE	T1:	NOT REQUIRED **	
COMPENSATION VALUE	T2:	NOT REQUIRED **	
ENHANCED DETECTION (ED)	T1:	ON ☐	OFF ■
	T2:	ON ☐	OFF ■
BACK TO BACK T1 AND T2 (WHEN ED IS ON)		NO ☐	YES ■
STATION STOP TIMER (WHEN ED IS ON)	T1:	N/A (SEE NOTE1)	SEC.
	T2:	N/A (SEE NOTE1)	SEC.
# OF TRACK WIRES - 4 OR 6	T1:	4 ☐	6 ■
	T2:	4 ☐	6 ■
LOW EX ADJUSTMENT	T1:	0	
	T2:	0	
LOW EZ DETECTION	T1:	ON ☐	OFF ■
	T2:	ON ☐	OFF ■
LOW EZ DETECTION TIMER	T1:	N/A (SEE NOTE2)	MIN.
	T2:	N/A (SEE NOTE2)	MIN.
POSITIVE START (0 = OFF) (ENTER EZ VALUE)	T1:	0	EZ
	T2:	0	EZ
POSITIVE START TIMEOUT (0 = NONE) (WHEN POTISIVE START IS ON)	T1:	0	MIN.
	T2:	0	MIN.
SET AT OPERATION		NORMAL ■	DIAGNOSTIC ☐
DIAGNOSTIC MESSAGES		ON ☐	OFF ■
DAX MESSAGES		ON ☐	OFF ■
ADVANCE PREEMP TIMER (0 = OFF)		0	SEC.

** THE COMPENSATION VALUE IS PROVIDED BY THE 3000 GCP SYSTEM AND NO ADDITIONAL PROGRAMMING IS NORMALLY REQUIRED.

THIS PLAN ☐ DOES ☒ DOES NOT SUPERSEDES PLANS DATED,

IL2006019 / 10-25-10

* PROGRAMMED AT INSTALLATION DURING CALIBRATION PROCEDURE

☆ = 120' MINIMUM ISLAND DISTANCE TO BE ENTERED BY FIELD PERSONNEL FOR NON-DAXING APPLICATIONS WHEN ROAD IS 20' OR LESS WIDE.

☆☆ = INDICATE ON AS-IN-SERVICE DRAWINGS

FIELD REVISION
SAT/DPL
08/08/13

= IN
= OUT
= EXISTING
= NOTE

= IN
= OUT

GE TRANSPORTATION
INTELLIGENT CONTROL SYSTEMS
Jacksonville, Florida
CSX PROJ #, IL2011037A DATE, 01-29-13
DESIGNED BY, SAT CHECKED BY, DPL

NOTES,

1. WHEN ED SET TO OFF, DEFAULT NOT DISPLAYED
   WHEN ED SET TO ON, DEFAULT IS 10 SEC.
2. WHEN LOW EZ DETECTION SET TO OFF, DEFAULT NOT DISPLAYED
   WHEN LOW EZ DETECTION SET TO ON, DEFAULT IS 10 MIN.

8'X8' CROSSING HOUSE

CSX TRANSPORTATION
RAIL TRANSPORT GROUP ENGINEERING
COMMUNICATIONS AND SIGNALS

VERMONT STREET
UNION STREET (163418D CSX TRACKS)
71-3CWU DETECTION DEVICE PROGRAM
BLUE ISLAND, IL M.P. DC-15.71

3000D2.C02
REV. 05-06-05

DESIGNED	DIGITIZED	CHECKED	DATE
XRL	XRL	XRL	10-25-10

01-29-13	DESIGN DATE	REV. NO.	DRAWING	SHEET NO	FILE	SHEET
	10-25-10	2 1	-----	-----	DC01548	C51

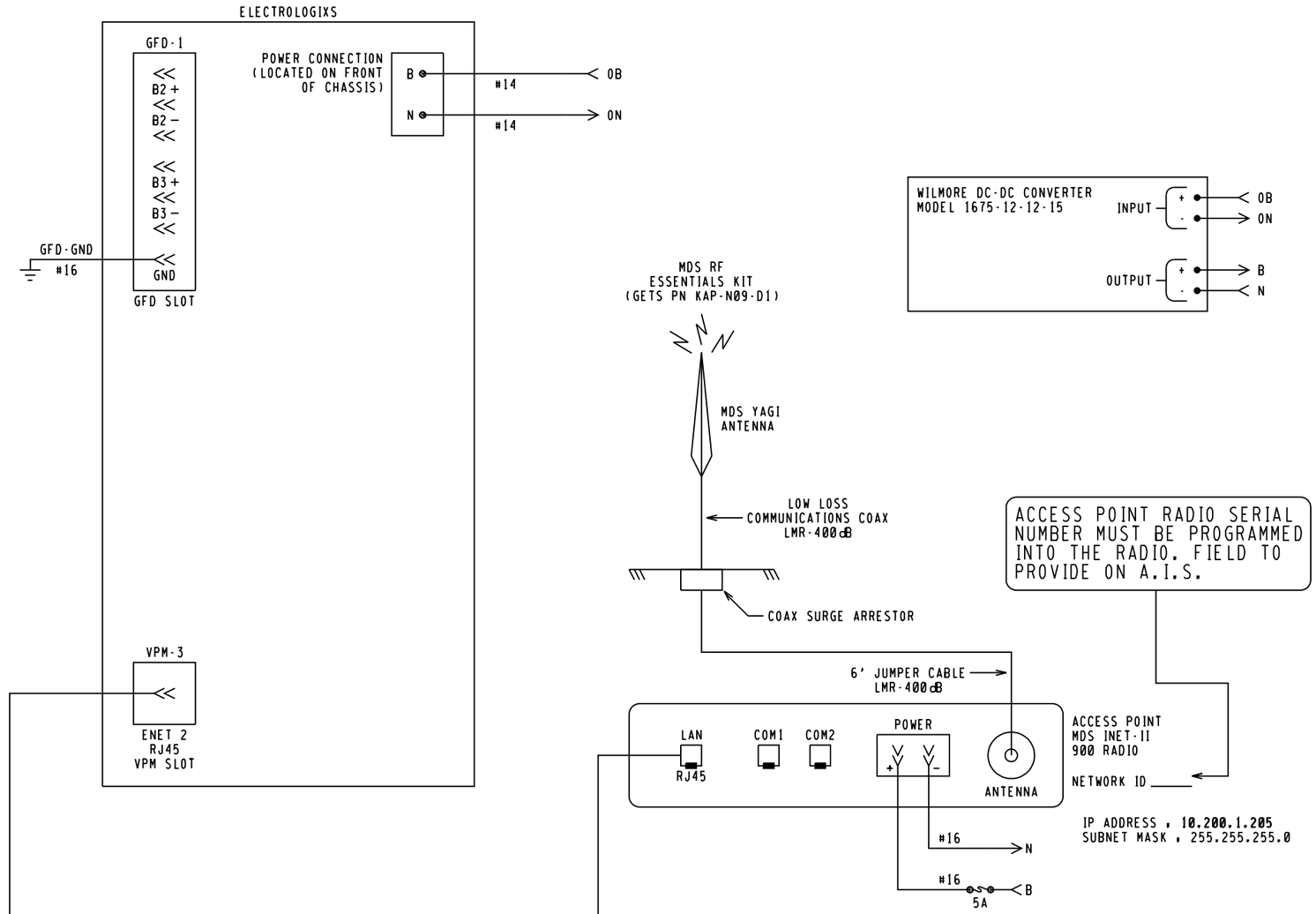

NOTES,

1. THE GROUND CONNECTION MAY BE ATTACHED TO TERMINALS 1, 10 OR BOTH.

LOCATION B REMOTE (49CWU)

NEW WORK

GE TRANSPORTATION
INTELLIGENT CONTROL SYSTEMS
Jacksonville, Florida

CSX PROJ #,IL2011037A DATE,01-29-13
DESIGNED BY,SAT CHECKED BY,DPL

CSX TRANSPORTATION
RAIL TRANSPORT GROUP ENGINEERING
COMMUNICATIONS AND SIGNALS

VERMONT STREET

ELECTROLOGICS CIRCUITS
BLUE ISLAND, IL M.P. DC-15.48

DESIGNED	DIGITIZED	CHECKED	DATE
GET/SAT	GET/SAT	GET/DPL	01-29-13

DESIGN DATE	REV. NO.	DRAWING	SHEET NO	FILE	SHEET
01-29-13	2	-----	-----	DC01548	C64

SITE SPECIFIC MDR DESCRIPTIONS AND SETTINGS

NAME		MDR1			MDR2			MDR3			MDR4			MDR5			MDR6		
FUNCTION		AX1			AX2			AX3			AX4			AX5			AX6		
WARNING TIME		60			60			NA			NA			NA			NA		
CW/MD		CW*			CW*			NA			NA			NA			NA		
AP TIME(PREEMPT)		NA			NA			NA			NA			NA			NA		
CWE-WT		80			80			NA			NA			NA			NA		
AUX RECOVERY DELAY		0			0			NA			NA			NA			NA		
TRACK		TK 1	TK 2	TK 3	TK 1	TK 2	TK 3	TK 1	TK 2	TK 3	TK 1	TK 2	TK 3	TK 1	TK 2	TK 3	TK 1	TK 2	TK 3
TRACK ASSIGNED		ASSIGNED	UNASSIGNED	UNASSIGNED	UNASSIGNED	ASSIGNED	UNASSIGNED	UNASSIGNED	UNASSIGNED	UNASSIGNED	UNASSIGNED	UNASSIGNED	UNASSIGNED	UNASSIGNED	UNASSIGNED	UNASSIGNED	UNASSIGNED	UNASSIGNED	UNASSIGNED
OFFSET DISTANCE		2456'	NA	NA	NA	1973'	NA	NA	NA	NA	NA	NA	NA	NA	NA	NA	NA	NA	NA
MD RESTART		0*	NA	NA	NA	0*	NA	NA	NA	NA	NA	NA	NA	NA	NA	NA	NA	NA	NA
SUDDEN SHUNT ZONE		0*	NA	NA	NA	0*	NA	NA	NA	NA	NA	NA	NA	NA	NA	NA	NA	NA	NA
POSITIVE START	PSEN	DISABLE	NA	NA	NA	DIABLE	NA	NA	NA	NA	NA	NA	NA	NA	NA	NA	NA	NA	NA
	PSRX	NA	NA	NA	NA	NA	NA	NA	NA	NA	NA	NA	NA	NA	NA	NA	NA	NA	NA
	PST	NA	NA	NA	NA	NA	NA	NA	NA	NA	NA	NA	NA	NA	NA	NA	NA	NA	NA
POST JOINT DETECT	PJEN	DISABLE	NA	NA	NA	DISABLE	NA	NA	NA	NA	NA	NA	NA	NA	NA	NA	NA	NA	NA
	PJRX	NA	NA	NA	NA	NA	NA	NA	NA	NA	NA	NA	NA	NA	NA	NA	NA	NA	NA
	PJDT	NA	NA	NA	NA	NA	NA	NA	NA	NA	NA	NA	NA	NA	NA	NA	NA	NA	NA
CLEAR JOINT LOS	CJ-LOS MODE	STANDARD	NA	NA	NA	STANDARD	NA	NA	NA	NA	NA	NA	NA	NA	NA	NA	NA	NA	NA
	CJ-LOS RX	15	NA	NA	NA	15	NA	NA	NA	NA	NA	NA	NA	NA	NA	NA	NA	NA	NA
	CJ-LOS TIME	5	NA	NA	NA	5	NA	NA	NA	NA	NA	NA	NA	NA	NA	NA	NA	NA	NA

BASIC TRACK SETUP

	TRACK 1	TRACK 2
FREQUENCY	979 HZ	979 HZ
MASTER/SLAVE	MASTER	SLAVE
RX ADJUST	100 *	100 *
TCA	*	*
DIRECTION MODE	UNI	UNI
LIA	*	*
ADVANCED APPROACH	*	*
NBS COMP RX	*	*
TRK ISLAND ASSIGN	NA	NA
APPROACH LENGTH	1021'	1086'
AUTO RX	ENABLE	ENABLE

VPM3 ETHERNET REMOTE SETUP

REMOTE 1 [60 CWU]	
LOC NETWORK ID	1003
DESTINATION NETWORK ID	1001
DESTINATION IP ADDRESS	10.200.1.101
RP 2000 PORT NUMBER	8280
REMOTE 2 F HOUSE [10-3 CWU]	
LOC NETWORK ID	1003
DESTINATION NETWORK ID	1010
DESTINATION IP ADDRESS	10.200.1.110
RP 2000 PORT NUMBER	8280

VPM3 ETHERNET SETUP

	IP ADDRESS
ETHERNET PORT 1 (TOP)	192.168.0.11
ETHERNET PORT 2 (BOTTOM)	10.200.1.103

ADVANCED TRACK SETUP

		TRACK 1	TRACK 2
MOTION DET TIMER	MDEN	DISABLE	DISABLE
	MDTT	10 MIN	10 MIN
FALSE SHUNT	FSEN	DISABLE	DISABLE
	FSRX	NA	NA
	FST	NA	NA
APPROACH RELEASE	AREN	DISABLE	DISABLE
	ARRX	NA	NA
	ART	NA	NA
LOS TIME		16 SEC	16 SEC
IJ-LOS TIME		5 SEC	5 SEC
NRML*SHRT*VRYSHRT		*	*

ISLAND SETUP (NOT USED)

	TRACK 1	TRACK 2
ENABLE/DISABLE	DISABLE	DISABLE
FREQUENCY	X.X KHZ	X.X KHZ
LOSS OF SHUNT	2 SEC.	2 SEC.
FAULT DELAY	1 OR 2	1 OR 2

NOTES:
* = FIELD ADJUSTMENT
NA = NOT APPLICABLE

LOCATION B REMOTE (49CWU)

NEW WORK
GE TRANSPORTATION
INTELLIGENT CONTROL SYSTEMS
Jacksonville, Florida
CSX PROJ #:IL2011037A DATE:01-29-13
DESIGNED BY:SAT CHECKED BY:DPL

C4R-3.C02
REV. 02-29-12

CSX TRANSPORTATION
RAIL TRANSPORT GROUP ENGINEERING
COMMUNICATIONS AND SIGNALS

VERMONT STREET

XP4 MODULE SETUP INFORMATION (49CWU)
BLUE ISLAND, IL M.P. DC-15.48

DESIGNED	DIGITIZED	CHECKED	DATE
GET/SAT	GET/SAT	GET/DPL	01-29-13

DESIGN DATE	REV. NO.	DRAWING	SHEET NO	FILE	SHEET
01-29-13	2	-----	-----	DC01548	C65

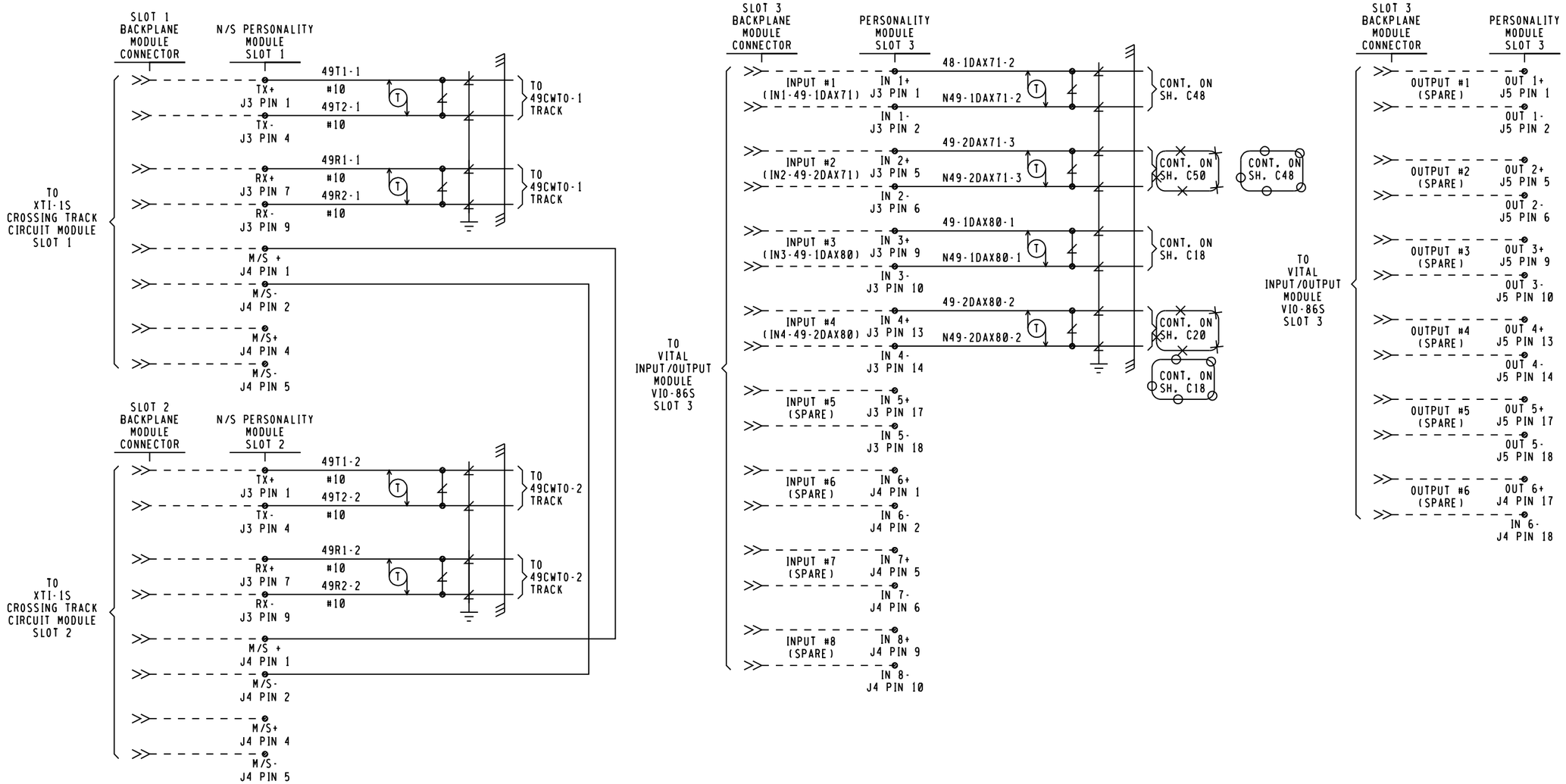

NOTES
1. ALL WIRE THIS SHEET #16 AWG UNLESS NOTED.
2. APPROACH DISABLE JUMPER INPUT. THIS INPUT IS USED IN COMBINATION WITH THE SOFT APPROACH DISABLE ACCESSED THROUGH THE CDU-1 KEYPAD. BOTH BITS MUST BE HIGH TO DISABLE AN APPROACH. THE OPERATOR IS SOLELY RESPONSIBLE FOR CROSSING PROTECTION WHEN THE APPROACH DISABLE FUNCTION IS ACTIVATED.

LOCATION B (49CWU)

FIELD REVISION
SAT/DPL
08/08/13
= IN
= OUT
= EXISTING
= NOTE

NEW WORK
GE TRANSPORTATION
INTELLIGENT CONTROL SYSTEMS
Jacksonville, Florida
CSX PROJ #, IL2011037A DATE, 01-29-13
DESIGNED BY, SAT CHECKED BY, DPL

C4R-3.C01
REV. 12-12-11

CSX TRANSPORTATION
RAIL TRANSPORT GROUP ENGINEERING
COMMUNICATIONS AND SIGNALS

VERMONT STREET

XP4 MODULE CONNECTOR USAGE
BLUE ISLAND, IL M.P. DC-15.48

DESIGNED	DIGITIZED	CHECKED	DATE
GET/SAT	GET/SAT	GET/DPL	01-29-13

DESIGN DATE	REV. NO.	DRAWING	SHEET NO	FILE	SHEET
01-29-13	2	-----	-----	DC01548	C66

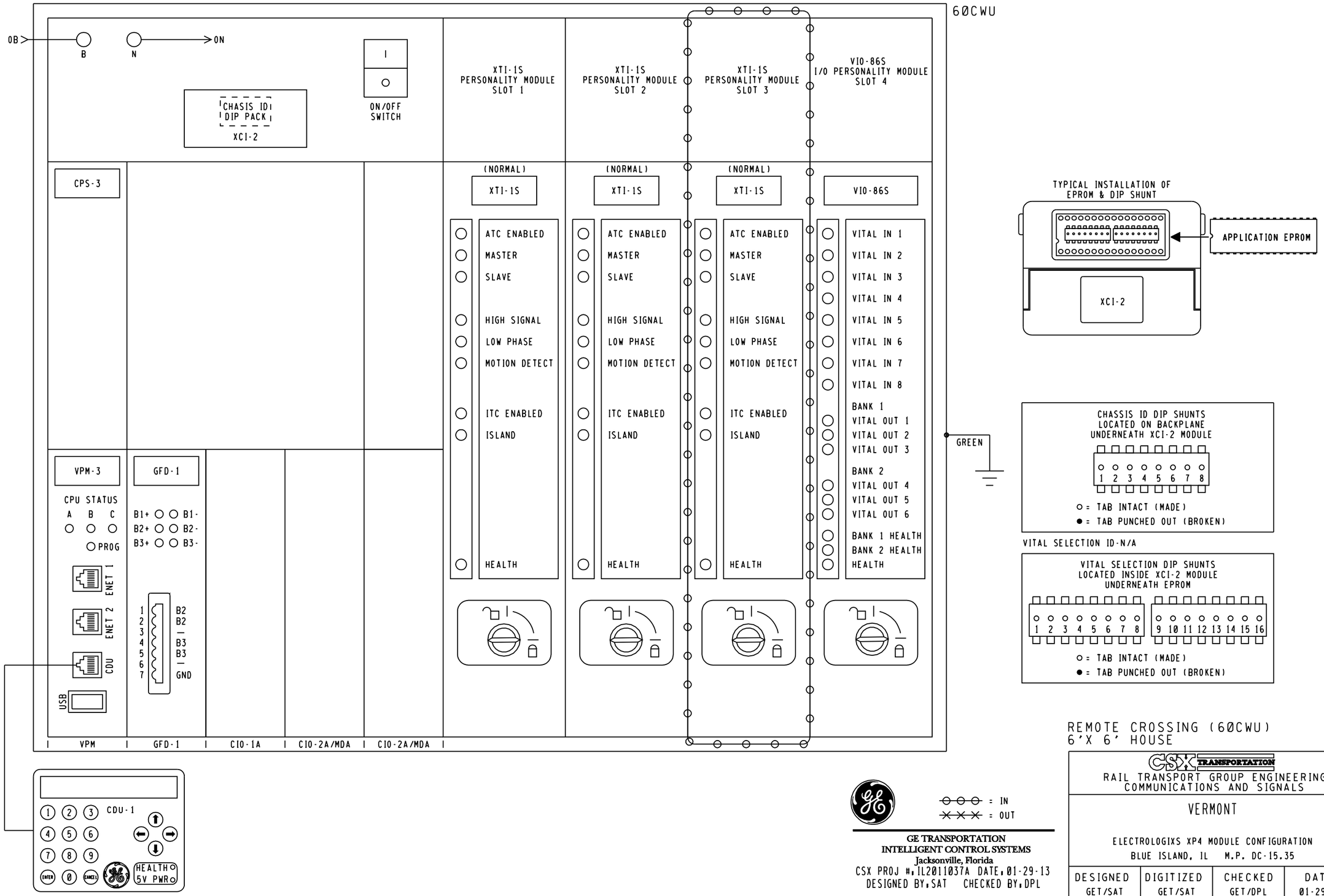
60CWU
OB
B
N
ON
CHASIS ID DIP PACK
XCI-2
ON/OFF SWITCH
XTI-1S PERSONALITY MODULE SLOT 1
XTI-1S PERSONALITY MODULE SLOT 2
XTI-1S PERSONALITY MODULE SLOT 3
VIO-86S I/O PERSONALITY MODULE SLOT 4
CPS-3
(NORMAL)
XTI-1S
VIO-86S
ATC ENABLED
MASTER
SLAVE
HIGH SIGNAL
LOW PHASE
MOTION DETECT
ITC ENABLED
ISLAND
HEALTH
VITAL IN 1
VITAL IN 2
VITAL IN 3
VITAL IN 4
VITAL IN 5
VITAL IN 6
VITAL IN 7
VITAL IN 8
BANK 1
VITAL OUT 1
VITAL OUT 2
VITAL OUT 3
BANK 2
VITAL OUT 4
VITAL OUT 5
VITAL OUT 6
BANK 1 HEALTH
BANK 2 HEALTH
GREEN
VPM-3
CPU STATUS
A B C
PROG
ENET 1
ENET 2
CDU
USB
GFD-1
B1+ B1-
B2+ B2-
B3+ B3-
B2
B2
B3
B3
GND
VPM
GFD-1
CIO-1A
CIO-2A/MDA
CIO-2A/MDA
CDU-1
HEALTH
5V PWR
TYPICAL INSTALLATION OF EPROM & DIP SHUNT
APPLICATION EPROM
XCI-2
CHASSIS ID DIP SHUNTS LOCATED ON BACKPLANE UNDERNEATH XCI-2 MODULE
1 2 3 4 5 6 7 8
○ = TAB INTACT (MADE)
● = TAB PUNCHED OUT (BROKEN)
VITAL SELECTION ID-N/A
VITAL SELECTION DIP SHUNTS LOCATED INSIDE XCI-2 MODULE UNDERNEATH EPROM
1 2 3 4 5 6 7 8
9 10 11 12 13 14 15 16
○ = TAB INTACT (MADE)
● = TAB PUNCHED OUT (BROKEN)
= IN
= OUT
GE TRANSPORTATION
INTELLIGENT CONTROL SYSTEMS
Jacksonville, Florida
CSX PROJ #: IL2011037A DATE: 01-29-13
DESIGNED BY: SAT CHECKED BY: DPL
REMOTE CROSSING (60CWU)
6' X 6' HOUSE
CSX TRANSPORTATION
RAIL TRANSPORT GROUP ENGINEERING
COMMUNICATIONS AND SIGNALS
VERMONT
ELECTROLOGIXS XP4 MODULE CONFIGURATION
BLUE ISLAND, IL M.P. DC-15.35
DESIGNED GET/SAT
DIGITIZED GET/SAT
CHECKED GET/DPL
DATE 01-29-13
DESIGN DATE 01-29-13
REV. NO. 4
DRAWING -----
SHEET NO -----
FILE DC01535
SHEET E06 X X

RS 930L SETUP	
TRANSMIT RATE	5.2 Mbs
IP ADDRESS	10.200.1.304
PORT 7 MODE	MASTER
PORT 9 MODE	MASTER

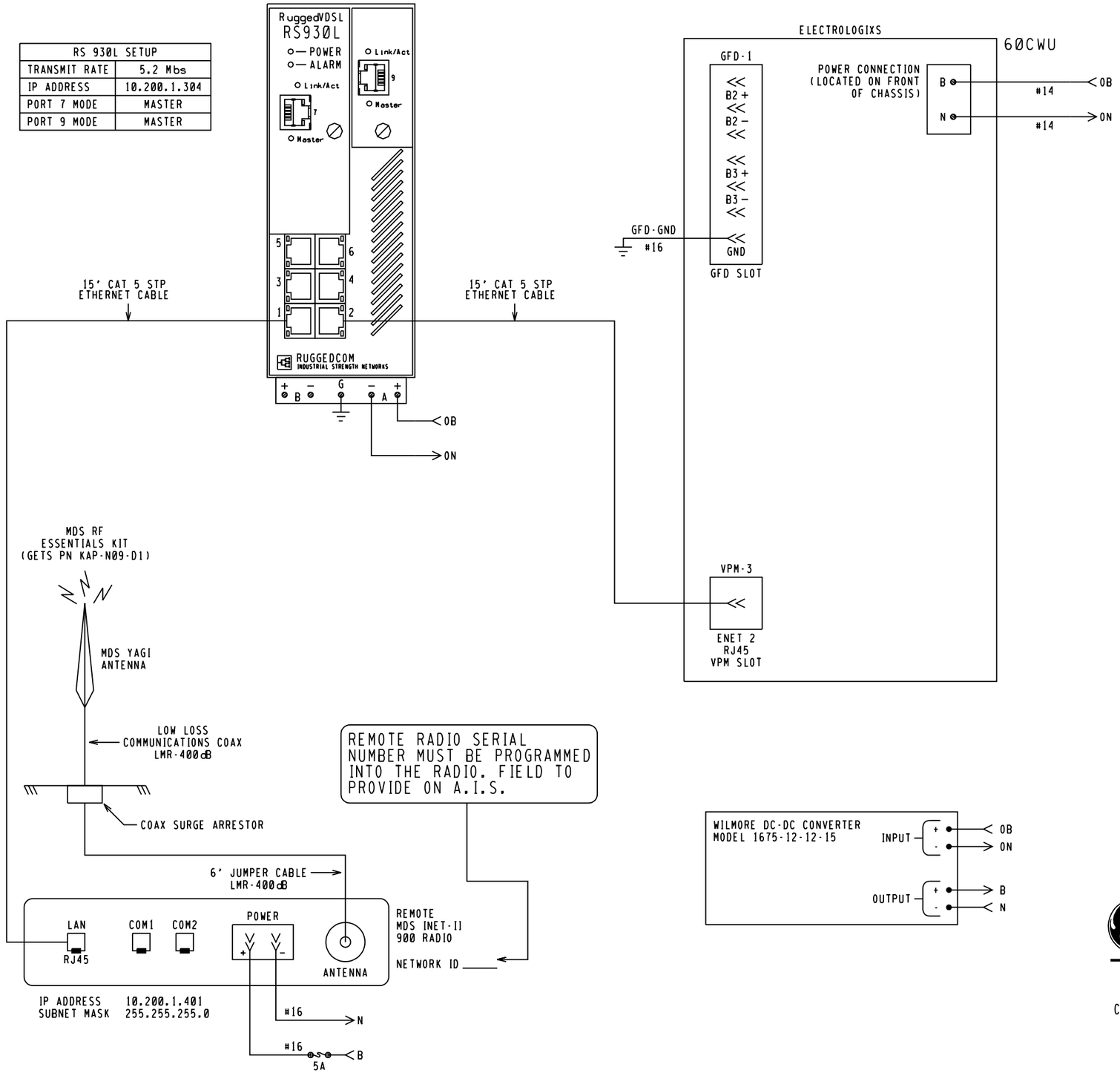

NOTE:

(✕) = SUPPLIED & WIRED BY RAILROAD.

FIELD SET
03/19/13

NEW WORK

GE TRANSPORTATION
INTELLIGENT CONTROL SYSTEMS
Jacksonville, Florida
CSX PROJ #: IL2011037A DATE: 01-29-13
DESIGNED BY: SAT CHECKED BY: DPL

REMOTE CROSSING (60CWU)
6'X 6' HOUSE

CSX TRANSPORTATION
RAIL TRANSPORT GROUP ENGINEERING
COMMUNICATIONS AND SIGNALS

VERMONT

60CWU ELECTROLOGIXS XP4 CIRCUITS
BLUE ISLAND, IL M.P. DC-15.35

DXOELX3.C11
REV. 08-31-10

DESIGNED	DIGITIZED	CHECKED	DATE
GET/DLK	GET/SAT	GET/FAP	08-25-12

DESIGN DATE	REV. NO.	DRAWING	SHEET NO	FILE	SHEET
08-25-12	3	-----	-----	DC01535	C16

SITE SPECIFIC MDR DESCRIPTIONS AND SETTINGS

NAME		MDR1			MDR2			MDR3			MDR4				MDR5			MDR6		
FUNCTION		10-1AX			10-2AX			AX4		10-3	AX4				AX5			AX6		
WARNING TIME		60			60			NA		60	NA				NA			NA		
CW/MD		CW			CW			NA		CW	NA				NA			NA		
AP TIME(PREEMPT)		X			X			NA		X	NA				NA			NA		
CWE-WT		64			64			NA		64	NA				NA			NA		
AUX RECOVERY DELAY		10			10			NA		10	NA				NA			NA		
TRACK		TK 1	TK 2	TK 3	TK 1	TK 2	TK 3	TK 1	TK 2	TK 3	TK 1	TK 2	TK 3	TK 4	TK 1	TK 2	TK 3	TK 1	TK 2	TK 3
TRACK ASSIGNED		ASSIGNED	ASSIGNED	ASSIGNED	UNASSIGNED	ASSIGNED	UNASSIGNED	UNASSIGNED	UNASSIGNED	UNASSIGNED	UNASSIGNED	UNASSIGNED	UNASSIGNED	UNASSIGNED	UNASSIGNED	UNASSIGNED	UNASSIGNED	UNASSIGNED	UNASSIGNED	UNASSIGNED
OFFSET DISTANCE		914'	NA	NA	NA	874'	NA	NA	NA	NA	NA	NA	NA	NA	NA	NA	NA	NA	NA	NA
MD RESTART		X	NA	NA	NA	X	NA	NA	NA	NA	NA	NA	NA	NA	NA	NA	NA	NA	NA	NA
SUDDEN SHUNT ZONE		X	NA	NA	NA	X	NA	NA	NA	NA	NA	NA	NA	NA	NA	NA	NA	NA	NA	NA
POSITIVE START	PSEN	DISABLE	NA	NA	NA	DISABLE	NA	NA	NA	NA	NA	NA	NA	NA	NA	NA	NA	NA	NA	NA
	PSRX	NA	NA	NA	NA	NA	NA	NA	NA	NA	NA	NA	NA	NA	NA	NA	NA	NA	NA	NA
	PST	NA	NA	NA	NA	NA	NA	NA	NA	NA	NA	NA	NA	NA	NA	NA	NA	NA	NA	NA
POST JOINT DETECT	PJEN	DISABLE	NA	NA	NA	DISABLE	NA	NA	NA	NA	NA	NA	NA	NA	NA	NA	NA	NA	NA	NA
	PJRX	15	NA	NA	NA	15	NA	NA	NA	NA	NA	NA	NA	NA	NA	NA	NA	NA	NA	NA
	PJDT	15	NA	NA	NA	15	NA	NA	NA	NA	NA	NA	NA	NA	NA	NA	NA	NA	NA	NA
CLEAR JOINT LOS	CJ-LOS MODE	STANDARD	NA	NA	NA	STANDARD	NA	NA	NA	NA	NA	NA	NA	NA	NA	NA	NA	NA	NA	NA
	CJ-LOS RX	15	NA	NA	NA	15	NA	NA	NA	NA	NA	NA	NA	NA	NA	NA	NA	NA	NA	NA
	CJ-LOS TIME	5	NA	NA	NA	5	NA	NA	NA	NA	NA	NA	NA	NA	NA	NA	NA	NA	NA	NA

DISABLE
15
15
STANDARD

1058'
X
X
DISABLE

BASIC TRACK SETUP

	TRACK 1	TRACK 2	TRACK 3
FREQUENCY	151 HZ	151 HZ	979 HZ
MASTER/SLAVE	MASTER	SLAVE	MASTER
RX ADJUST	X	X	X
TCA	X	X	X
DIRECTION MODE	BI	BI	UNI
LIA	X	X	X
ADVANCED APPROACH	X	X	X
NBS COMP RX	X	X	X
TRK ISLAND ASSIGN	NA	NA	NA
APPROACH LENGTH	3061'	3061'	975'
AUTO RX	DISABLE	DISABLE	DISABLE

VPM3 ETHERNET SETUP

	IP ADDRESS
ETHERNET PORT 1 (TOP)	192.168.0.11
ETHERNET PORT 2 (BOTTOM)	10.200.1.101

VPM3 ETHERNET REMOTE SETUP

REMOTE 1 [D HOUSE]	
LOC NETWORK ID	1001
DESTINATION NETWORK ID	1000
DESTINATION IP ADDRESS	10.200.1.100
RP 2000 PORT NUMBER	8280
REMOTE 2 VERMONT B HOUSE [49CWU]	
LOC NETWORK ID	1001
DESTINATION NETWORK ID	1003
DESTINATION IP ADDRESS	10.200.1.103
RP 2000 PORT NUMBER	8280
REMOTE 3 F HOUSE [10-3CWU]	
LOC NETWORK ID	1001
DESTINATION NETWORK ID	1010
DESTINATION IP ADDRESS	10.200.1.110
RP 2000 PORT NUMBER	8280

ADVANCED TRACK SETUP

		TRACK 1	TRACK 2	TRACK 3
MOTION DET TIMER	MDEN	ENABLE	ENABLE	ENABLE
	MDTT	10 MIN	10 MIN	10 MIN
FALSE SHUNT	FSEN	DISABLE	DISABLE	DISABLE
	FSRX	NA	NA	NA
	FST	NA	NA	NA
APPROACH RELEASE	AREN	DISABLE	DISABLE	DISABLE
	ARRX	NA	NA	NA
	ART	NA	NA	NA
LOS TIME		16 SEC	16 SEC	16 SEC
IJ-LOS TIME		5 SEC	5 SEC	5 SEC
NRML*SHRT*VRYSHRT		NORMAL	NORMAL	NORMAL

ISLAND SETUP (NOT USED)

	TRACK 1	TRACK 2	TRACK 3
ENABLE/DISABLE			
FREQUENCY			
LOSS OF SHUNT			
FAULT DELAY			

IXC-20S SETUP (NA)

LAMP BANK 1	
LAMP BANK 2	
GATE 1 DELAY	
GATE 2 DELAY	
FLASH RATE	

NOTES:

X = FIELD ADJUSTMENT TO BE MADE ACCORDING TO XP4 INSTRUCTION MANUAL
NA = NON-APPLICABLE

= IN
= OUT

GE TRANSPORTATION
INTELLIGENT CONTROL SYSTEMS
Jacksonville, Florida
CSX PROJ #:IL2011037A DATE:01-29-13
DESIGNED BY:SAT CHECKED BY:DPL

REMOTE CROSSING (XP4-60CWU)
6'X 6' HOUSE

CSX TRANSPORTATION
RAIL TRANSPORT GROUP ENGINEERING
COMMUNICATIONS AND SIGNALS

VERMONT

XP4 60CWU MODULE SETUP INFORMATION
BLUE ISLAND, IL M.P. DC-15.35

DESIGNED	DIGITIZED	CHECKED	DATE
GET/DLK	GET/SAT	GET/FAP	08-25-12

DESIGN DATE	REV. NO.	DRAWING	SHEET NO	FILE	SHEET
08-25-12	3	-----	-----	DC01535	C17

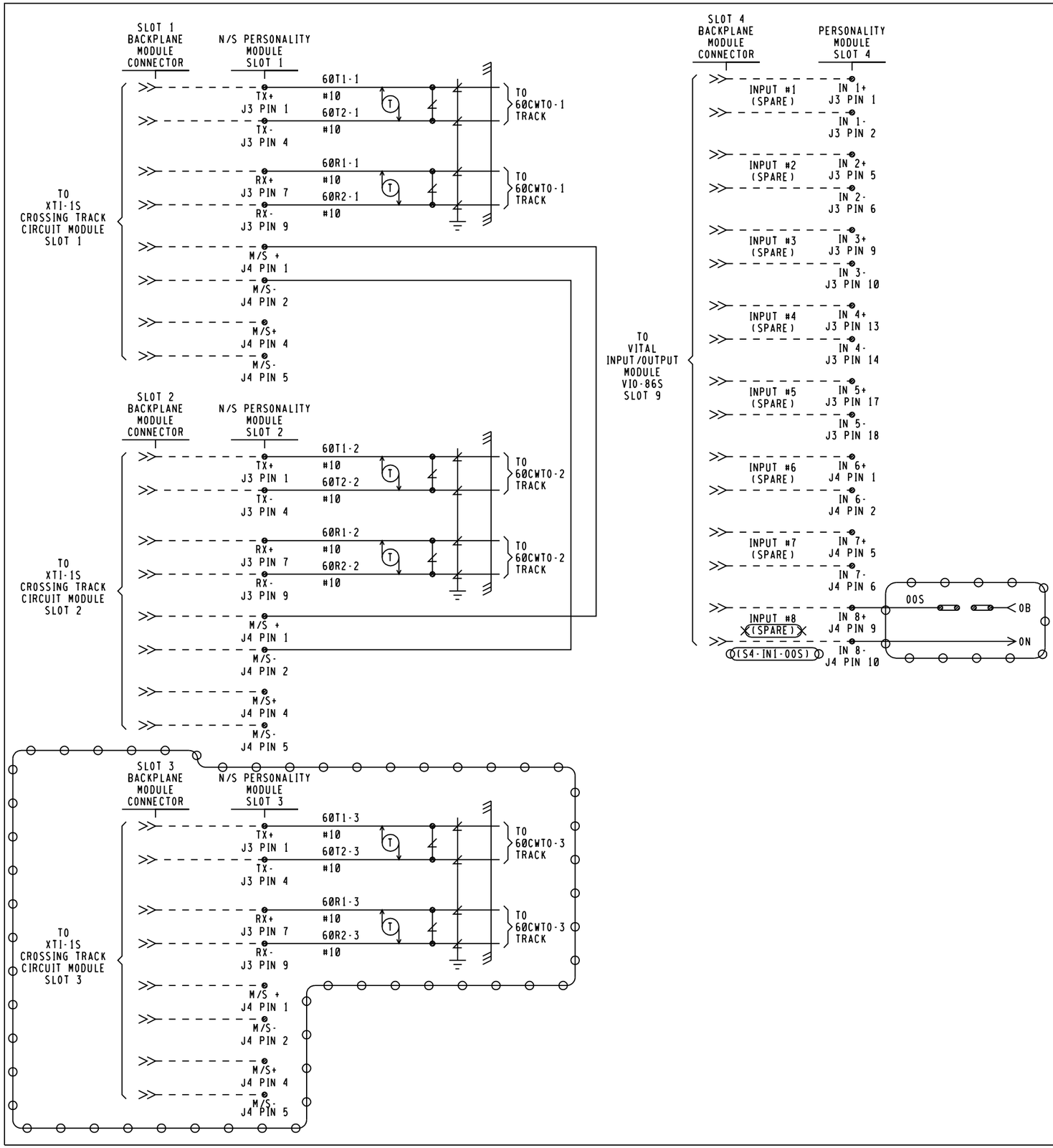

THIS PLAN ☐ DOES ☒ DOES NOT SUPERSEDES PLANS DATED.

IL2011037 / 08-25-12
(NEW WORK)

= IN
= OUT

GE TRANSPORTATION
INTELLIGENT CONTROL SYSTEMS
Jacksonville, Florida
CSX PROJ #, IL2011037A DATE, 01-29-13
DESIGNED BY, SAT CHECKED BY, DPL

NOTES
1. ALL WIRE THIS SHEET #16 AWG UNLESS NOTED.
2. APPROACH DISABLE JUMPER INPUT. THIS INPUT IS USED IN COMBINATION WITH THE SOFT APPROACH DISABLE ACCESSED THROUGH THE CDU-1 KEYPAD. BOTH BITS MUST BE HIGH TO DISABLE AN APPROACH. THE OPERATOR IS SOLELY RESPONSIBLE FOR CROSSING PROTECTION WHEN THE APPROACH DISABLE FUNCTION IS ACTIVATED.

REMOTE CROSSING (60CWU)
6'X 6' HOUSE

CSX TRANSPORTATION
RAIL TRANSPORT GROUP ENGINEERING
COMMUNICATIONS AND SIGNALS

VERMONT

XP4 MODULE CONNECTOR USAGE
BLUE ISLAND, IL M.P. DC-15.35

C4R-3.C01
REV. 12-12-11

DESIGNED	DIGITIZED	CHECKED	DATE
GET/DLK	GET/SAT	GET/FAP	08-25-12

01-29-13	DESIGN DATE	REV. NO.	DRAWING	SHEET NO	FILE	SHEET
	08-25-12	4 3	-----	-----	DC01535	C18