INDEX

CONTENTS

SH. NO.		REVISION NO. 1	2	3	4	5	6	7	8	9
I01	TITLE, NOTES, INDEX & REVISIONS									
I02	TITLE, NOTES, INDEX & REVISIONS									
I03	TITLE, NOTES, INDEX & REVISIONS									
S01	TRACK & SIGNAL PLAN (SIGNALS 2 & 6)									
S02	TRACK & SIGNAL PLAN (UNION STREET 163418D CSX TRACKS)									
S03	TRACK & SIGNAL PLAN (LOCATION B, SWITCHES A1, B1, A5 & B5)									
S04	TRACK & SIGNAL PLAN (SWITCH A9)									
S05	TRACK & SIGNAL PLAN (LOCATION C, SWITCHES A7, B7 & B9)									
S06	TRACK & SIGNAL PLAN (SIGNALS 4,8,12 & 16)									
S07	TRACK & SIGNAL PLAN (UNION STREET 283160U CN TRACKS)									
S08	TRACK & SIGNAL PLAN (SIGNALS 10 & 14, SWITCHES A3 & B3)									
P01	ELECTROLOGIXS PROGRAM (LOCATION A)									
P02	ELECTROLOGIXS PROGRAM (LOCATION B)									
P03	ELECTROLOGIXS PROGRAM (LOCATION C)									
G01	ELECTROLOGIXS I/O EQUIVALENT CIRCUITS (LOCATION A)									
G02	OFFICE CONTROL & INDICATION EQUIVALENT CIRCUITS (LOCATION A)									
G03	ELECTROLOGIXS I/O EQUIVALENT CIRCUITS (LOCATION B)									
G04	ELECTROLOGIXS I/O EQUIVALENT CIRCUITS (LOCATION C)									
E01	POWER DISTRIBUTION (LOCATION A)									
E02	TRACK CIRCUITS (LOCATION A)									
E03	RACK 1 LAYOUT (LOCATION A)									
E04	ELECTROLOGIXS MODULE CONFIGURATION (LOCATION A)									
E05	POWER DISTRIBUTION (LOCATION B)									
E06	TRACK CIRCUITS (LOCATION B)									
E07	RACK 1 LAYOUT (LOCATION B)									
E08	RACK 2 LAYOUT (LOCATION B)									
E09	ELECTROLOGIXS MODULE CONFIGURATION (LOCATION B)									
E10	POWER DISTRIBUTION (LOCATION C)									
E11	TRACK CIRCUITS (LOCATION C)									
E12	RACK 1 LAYOUT (LOCATION C)									
E13	RACK 2 LAYOUT (LOCATION C)									
E14	ELECTROLOGIXS MODULE CONFIGURATION (LOCATION C)									
E15	POWER DISTRIBUTION (UNION STREET 163418D CSX TRACKS)									
E16	POWER DISTRIBUTION (UNION STREET 283160U CN TRACKS)									
E17	ELECTROLOGIXS MODULE XP4 CONFIGURATION (LOCATION B 49CWU)									
E18	ACCESS POINT INET-II 900 RADIO DETAILS (LOCATION B)									

= DESIGN COMPLETED

= REVISION COMPLETED

REVISIONS

REV. NO.	PROJECT NO.	DESIGN DATE	IN SERVICE DATE	REVISION DATE
1	IL2006019	10-25-10		
2	IL2011037A	01-29-13		

TO BE COMPLETED ON A.I.S.

THIS PLAN ☐ DOES ☒ DOES NOT SUPERSEDES PLANS DATED,

IL2006019 / 10-25-10

= NOTE

= IN

= OUT

GE TRANSPORTATION
INTELLIGENT CONTROL SYSTEMS
Jacksonville, Florida
CSX PROJ #,IL2011037A DATE,01-29-13
DESIGNED BY,SAT CHECKED BY,DPL

CSX TRANSPORTATION
RAIL TRANSPORT GROUP ENGINEERING
COMMUNICATIONS AND SIGNALS

VERMONT STREET

TITLE, NOTES, INDEX & REVISIONS
BLUE ISLAND, IL M.P. DC-15.48

DX0ELX3.I01WCM
REV. 05-31-09

DESIGNED	DIGITIZED	CHECKED	DATE
XRL	XRL	XRL	10-25-10

01-29-13	DESIGN DATE	REV. NO.	DRAWING	SHEET NO	FILE	SHEET
	10-25-10	2 1	-----	-----	DC01548	I01

INDEX

CONTENTS

SH. NO.		REVISION NO. 1	2	3	4	5	6	7	8	9
C01	ELECTROLOGIXS CIRCUITS (LOCATION A)									
C02	WCM CIRCUITS (LOCATION A)									
C03	ELECTROLOGIXS TRACK CIRCUITS (LOCATION A)									
C04	SIGNAL 2 LIGHTING CIRCUITS (LOCATION A)									
C05	SIGNAL 6 LIGHTING CIRCUITS (LOCATION A)									
C06	SIGNAL 10 LIGHTING CIRCUITS (LOCATION A)									
C07	SIGNAL 14 LIGHTING CIRCUITS (LOCATION A)									
C08	ELECTROLOGIXS I/O CIRCUITS (LOCATION A)									
C09	ELECTROLOGIXS I/O CIRCUITS (LOCATION A)									
C10	SWITCH 3 CIRCUITS (LOCATION A)									
C11	SWITCH A5 CIRCUITS (LOCATION A)									
C12	WAGO TERMINAL BOARDS (LOCATION A)									
C13	CUSTOM LOCAL CONTROL PANEL LAYOUT (LOCATION A)									
C14	CUSTOM LCP INDICATION CIRCUITS (LOCATION A)									
C15	CUSTOM LCP INDICATION CIRCUITS (LOCATION A)									
C16	CUSTOM LCP CONTROL CIRCUITS (LOCATION A)									
C17	CUSTOM LCP I/O CARDS (LOCATION A)									
C18	80-1CWU CROSSING DETECTION CIRCUITRY (LOCATION A)		⊘							
C19	80-1CWU DETECTION DEVICE PROGRAM (LOCATION A)		⊘							
C20	80-2CWU CROSSING DETECTION CIRCUITRY (LOCATION A)		⊘							
C21	80-2CWU DETECTION DEVICE PROGRAM (LOCATION A)		⊘							
C22	ELECTROLOGIXS CIRCUITS (LOCATION B)									
C23	ELECTROLOGIXS I/O CIRCUITS (LOCATION B)									
C24	ELECTROLOGIXS I/O CIRCUITS (LOCATION B)									
C25	SWITCH 1 CIRCUITS (LOCATION B)									
C26	SWITCH B5 CIRCUITS (LOCATION B)									
C27	WAGO TERMINAL BOARDS (LOCATION B)									
C28	LOCAL CONTROL PANEL & LAYOUT (LOCATION B)									
C29	LOCAL CONTROL PANEL I/O CARD (LOCATION B)									
C30	48CWU CROSSING DETECTION CIRCUITRY (LOCATION B)									
C31	48CWU DETECTION DEVICE PROGRAM (LOCATION B)									
C32	ELECTROLOGIXS CIRCUITS (LOCATION C)									
C33	ELECTROLOGIXS TRACK CIRCUITS (LOCATION C)									

= DESIGN COMPLETED

= REVISION COMPLETED

REVISIONS

REV. NO.	PROJECT NO.	DESIGN DATE	IN SERVICE DATE	REVISION DATE
1	IL2006019	10-25-10		
2	IL2011037A	01-29-13		

TO BE COMPLETED ON A.I.S.

THIS PLAN ☐ DOES ☒ DOES NOT SUPERSEDES PLANS DATED,

IL2006019 / 10-25-10

= NOTE

= IN

= OUT

GE TRANSPORTATION
INTELLIGENT CONTROL SYSTEMS
Jacksonville, Florida
CSX PROJ #, IL2011037A DATE, 01-29-13
DESIGNED BY, SAT CHECKED BY, DPL

CSX TRANSPORTATION
RAIL TRANSPORT GROUP ENGINEERING
COMMUNICATIONS AND SIGNALS

VERMONT STREET

TITLE, NOTES, INDEX & REVISIONS
BLUE ISLAND, IL M.P. DC-15.48

DX0ELX3.101WCM
REV. 05-31-09

DESIGNED	DIGITIZED	CHECKED	DATE
XRL	XRL	XRL	10-25-10

01-29-13	DESIGN DATE	REV. NO.	DRAWING	SHEET NO	FILE	SHEET
	10-25-10	2 1	-----	-----	DC01548	102

INDEX

CONTENTS

SH. NO.		REVISION NO. 1	2	3	4	5	6	7	8	9
C34	SIGNALS 4 & 8 LIGHTING CIRCUITS (LOCATION C)									
C35	SIGNAL 12 LIGHTING CIRCUITS (LOCATION C)									
C36	SIGNAL 16 LIGHTING CIRCUITS (LOCATION C)									
C37	ELECTROLOGIXS I/O CIRCUITS (LOCATION C)									
C38	ELECTROLOGIXS I/O CIRCUITS (LOCATION C)									
C39	SWITCH 7 CIRCUITS (LOCATION C)									
C40	SWITCH 9 CIRCUITS (LOCATION C)									
C41	WAGO TERMINAL BOARDS (LOCATION C)									
C42	LOCAL CONTROL PANEL & LAYOUT (LOCATION C)									
C43	LOCAL CONTROL PANEL I/O CARD (LOCATION C)									
C44	37CWU CROSSING DETECTION CIRCUITRY (LOCATION C)									
C45	37CWU DETECTION DEVICE PROGRAM (LOCATION C)									
C46	71-1CWU CROSSING DETECTION CIRCUITRY (UNION STREET 163418D CSX TRACKS)									
C47	71-1CWU DETECTION DEVICE PROGRAM (UNION STREET 163418D CSX TRACKS)									
C48	71-2CWU CROSSING DETECTION CIRCUITRY (UNION STREET 163418D CSX TRACKS)		⊘							
C49	71-2CWU DETECTION DEVICE PROGRAM (UNION STREET 163418D CSX TRACKS)		⊘							
C50	71-3CWU CROSSING DETECTION CIRCUITRY (UNION STREET 163418D CSX TRACKS)		⊘							
C51	71-3CWU DETECTION DEVICE PROGRAM (UNION STREET 163418D CSX TRACKS)		⊘							
C52	CROSSING WARNING DEVICE GATE CIRCUITRY (UNION STREET 163418D CSX TRACKS)									
C53	CROSSING WARNING DEVICE LIGHT CIRCUITRY (UNION STREET 163418D CSX TRACKS)									
C54	CROSSING RECORDER CIRCUITS (UNION STREET 163418D CSX TRACKS)									
C55	CROSSING RECORDER PROGRAM (UNION STREET 163418D CSX TRACKS)									
C56	87-1CWU CROSSING DETECTION CIRCUITRY (UNION STREET 283160U CN TRACKS)									
C57	87-1CWU DETECTION DEVICE PROGRAM (UNION STREET 283160U CN TRACKS)									
C58	87-2CWU CROSSING DETECTION CIRCUITRY (UNION STREET 283160U CN TRACKS)									
C59	87-2CWU DETECTION DEVICE PROGRAM (UNION STREET 283160U CN TRACKS)									
C60	CROSSING WARNING DEVICE GATE CIRCUITRY (UNION STREET 283160U CN TRACKS)									
C61	CROSSING WARNING DEVICE LIGHT CIRCUITRY (UNION STREET 283160U CN TRACKS)									
C62	CROSSING RECORDER CIRCUITS (UNION STREET 283160U CN TRACKS)									
C63	CROSSING RECORDER PROGRAM (UNION STREET 283160U CN TRACKS)									
C64	ELECTROLOGIXS CIRCUITS (LOCATION B 49CWU)		⊘							
C65	XP4 MODULE SETUP CONFIGURATION (LOCATION B 49CWU)		⊘							
C66	XP4 MODULE CONNECTOR USAGE (49CWU)		⊘							

= DESIGN COMPLETED

= REVISION COMPLETED

REVISIONS

REV. NO.	PROJECT NO.	DESIGN DATE	IN SERVICE DATE	REVISION DATE
1	IL2006019	10-25-10		
2	IL2011037A	01-29-13		

TO BE COMPLETED ON A.I.S.

THIS PLAN ☐ DOES ☒ DOES NOT SUPERSEDES PLANS DATED,

IL2006019 / 10-25-10

= NOTE

= IN

= OUT

GE TRANSPORTATION
INTELLIGENT CONTROL SYSTEMS
Jacksonville, Florida
CSX PROJ #, IL2011037A DATE, 01-29-13
DESIGNED BY, SAT CHECKED BY, DPL

CSX TRANSPORTATION
RAIL TRANSPORT GROUP ENGINEERING
COMMUNICATIONS AND SIGNALS

VERMONT STREET

TITLE, NOTES, INDEX & REVISIONS
BLUE ISLAND, IL M.P. DC-15.48

DXOELX3.101WCM
REV. 05-31-09

DESIGNED	DIGITIZED	CHECKED	DATE
XRL	XRL	XRL	10-25-10

DESIGN DATE	REV. NO.	DRAWING	SHEET NO	FILE	SHEET
01-29-13 / 10-25-10	2 / 1	-----	-----	DC01548	103

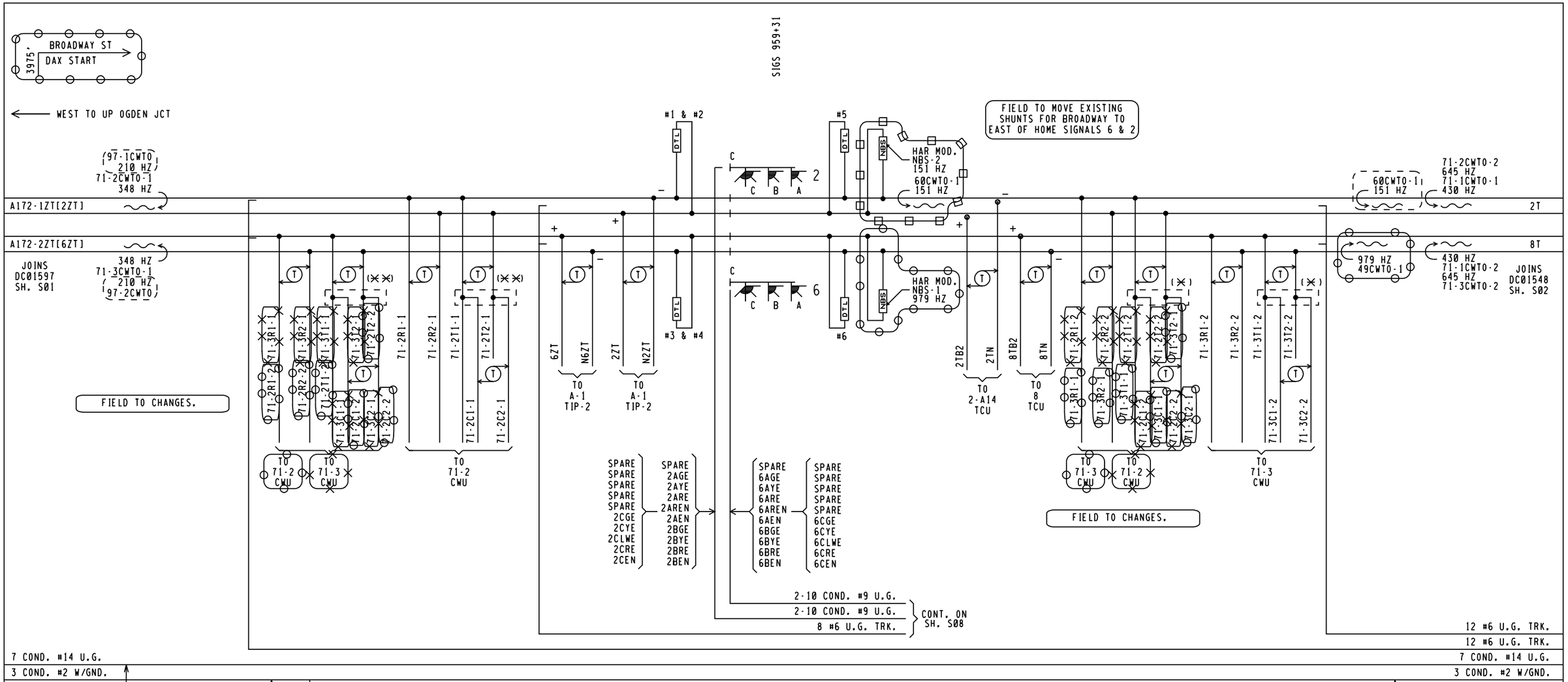

THIS PLAN ☐ DOES ☒ DOES NOT SUPERSEDES PLANS DATED,

IL2006019 / 10-25-10

NOTES,

1. (✕) = JCT. BOX, LENGTH OF CABLE FROM JCT. BOX TO TRACK SHOULD NOT EXCEED 25 FEET.
2. (✕✕) = JCT. BOX W/SAF MOD. 80074 SIM. TRK. BURIAL ASSEMBLY. THE LENGTH OF U.G. CABLE FROM THIS SIM. TRK. BURIAL ASSEMBLY TO TRACK SHOULD NOT EXCEED 25 FEET.

SHUNT CASE

DTL #1 & #3
HARMON FSS-1A 210 HZ MULTI FREQ. NBS
HPN 250849-000
HARMON FSS LOAD 1000'
HPN 227032-003

SHUNT CASE

DTL #2 & #4
SAF. 62775-1543 348 HZ MULTI FREQ. NBS
SAF. #8V617-2000'

SHUNT CASE

DTL #5
SAF. 62775-3497 430 HZ MULTI FREQ. NBS
SAF. #8V617-2000'

SHUNT CASE

DTL #6
SAF. 62775-3497 430 HZ MULTI FREQ. NBS
SAF. #8V617-400'

FIELD REVISION
SAT/DPL
07/29/13
= IN
= EXISTING
= NOTE

= EXISTING
= IN
= OUT

GE TRANSPORTATION
INTELLIGENT CONTROL SYSTEMS
Jacksonville, Florida
CSX PROJ #, IL2011037A DATE, 01-29-13
DESIGNED BY, SAT CHECKED BY, DPL

DXOELX3.S01A
REV. 05-31-09

CSX TRANSPORTATION
RAIL TRANSPORT GROUP ENGINEERING
COMMUNICATIONS AND SIGNALS

VERMONT STREET
(SIGNALS 2 & 6)
TRACK AND SIGNAL PLAN
BLUE ISLAND, IL M.P. DC-15.48

DESIGNED	DIGITIZED	CHECKED	DATE
XRL	XRL	XRL	10-25-10

DESIGN DATE	REV. NO.	DRAWING	SHEET NO	FILE	SHEET
01-29-13 / ~~10-25-10~~	2 / ~~1~~	-----	-----	DC01548	S01

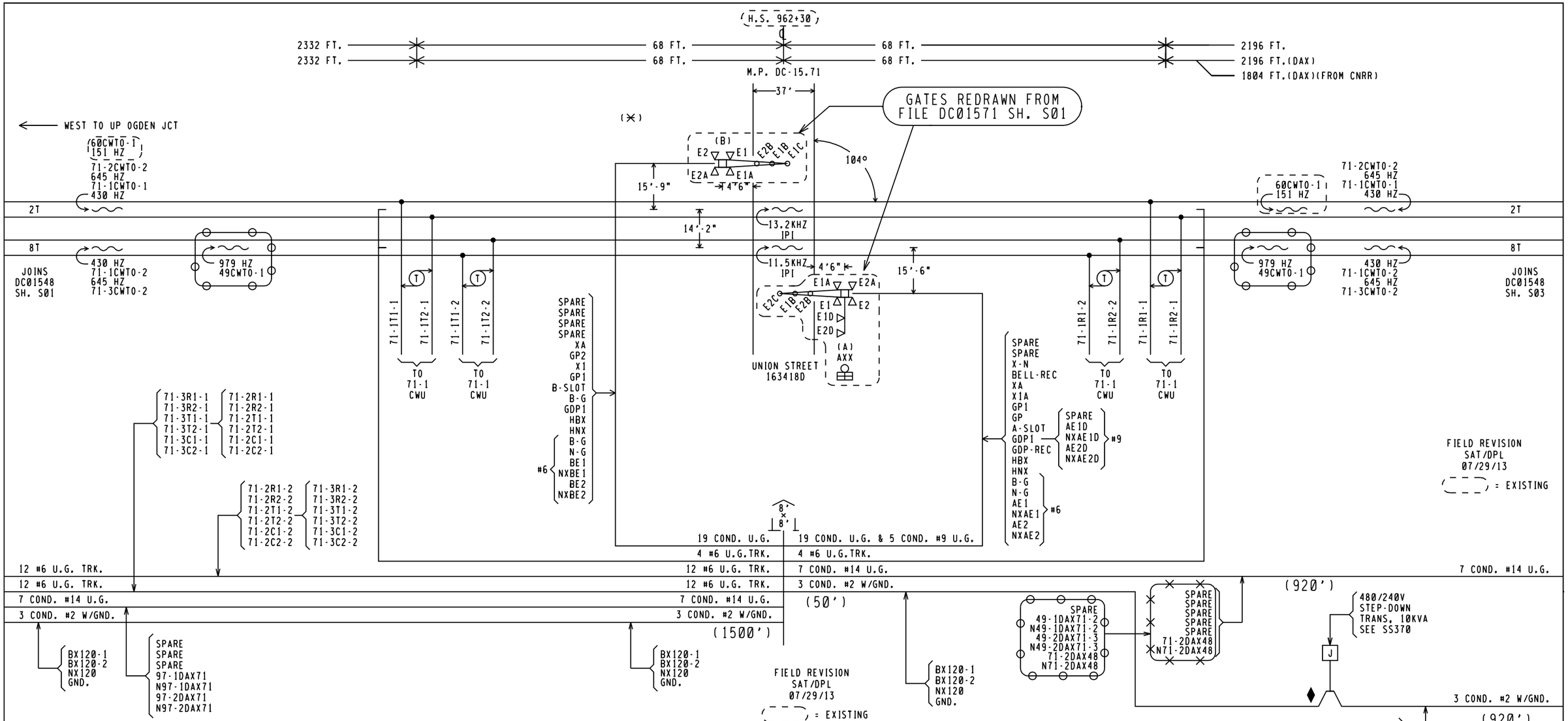

APPROACH LENGTHS TABLE DC, AFO, TYPE C, MOTION, CWT, OR OTHER	WESTWARD TRACK 1 CWT	EASTWARD TRACK 1 CWT	WESTWARD TRACK 2 CWT	EASTWARD TRACK 2 CWT	EASTWARD CNRR CWT
STANDARD MINIMUM WARNING TIME IN SECONDS	25	25	25	25	25
ROADWAY GATE TIME IN SECONDS	5	5	5	5	5
CLEARANCE TIME IN SECONDS	2	2	2	2	2
DOT TRAFFIC LIGHT SIMULTANEOUS PREEMPT TIME IN SECONDS ✳	0	0	0	0	0
DESIGNED WARNING TIME FOR TRAINS AT TIME TABLE SPEED	32 SEC.	32 SEC.	32 SEC.	32 SEC.	32 SEC.
DOT TRAFFIC LIGHT ADVANCE PREEMPT TIME IN SECONDS ✳	0	0	0	0	0
CONTROL EQUIPMENT DECISION TIME IN SECONDS	4	4	4	4	4
DESIGNED DETECTION TIME FOR TRAINS AT TIME TABLE SPEED	36 SEC.	36 SEC.	36 SEC.	36 SEC.	36 SEC.
TIME TABLE MAXIMUM TRAIN SPEED IN MILES PER HOUR	40	40/30	40	40/30	30
BUFFER SPEED IN MILES PER HOUR	5	5	5	5	5
TOTAL WARNING SYSTEM DESIGN SPEED IN MILES PER HOUR	45	45	45	45	35
APPROACH DISTANCE TO ISLAND EDGE IN FEET	2332	2196	2332	2196	1804
HALF WIDTH OF ISLAND IN FEET	68	68	68	68	68
APPROXIMATE MILE POSTS FOR APPROACH CIRCUIT	16.16	15.28	16.16	15.28	ELS-19.23 (DC-15.35)

✳AUTHORIZING AGENCY, NONE
✳DATE OF REQUIREMENT, NONE
✳AMOUNT OF TIME (SEC.), NONE

FIELD TO PROVIDE GATE LENGTHS

NOTES:

1. 20 WATT BULBS ON GATE ARMS. ALL OTHERS TO BE 25 WATT BULBS.
2. GATE LENGTH (A) XX' (B) XX'
3. (✳) = LOCATION OF HOUSE
4. TRANSMITTER LEADS FOR MOTION OR PREDICTOR EQUIPMENT SHOULD BE CONNECTED ON THE BUNGALOW OR SHORT LEAD SIDE OF THE CROSSING.
5. ISLAND TRACK LEADS SHOULD BE CONNECTED 50 FEET FROM ROAD EDGE BUT ON NARROW ROADS (20' OR LESS) ISLAND LENGTH SHALL BE 120 FEET.
6. WARNING SYSTEM APPROACH CIRCUIT DISTANCES ARE TO BE MEASURED FROM THE ISLAND TRACK CONNECTIONS.
7. ♦ = CABLE LENGTH TO BE KEPT AS SHORT AS POSSIBLE, NOT TO EXCEED 50'.

THIS PLAN ☐ DOES ☒ DOES NOT SUPERSEDES PLANS DATED,
IL2006019 / 10-25-10

= EXISTING
= NOTE
= IN
= OUT

GE TRANSPORTATION
INTELLIGENT CONTROL SYSTEMS
Jacksonville, Florida
CSX PROJ #, IL2011037A DATE, 01-29-13
DESIGNED BY, SAT CHECKED BY, DPL
2TRKPMD3RCPML.S01
REV. 12-14-09

CSX TRANSPORTATION
RAIL TRANSPORT GROUP ENGINEERING
COMMUNICATIONS AND SIGNALS

VERMONT STREET
UNION ST. (163418D)
(CSX TRACKS)
TRACK AND SIGNAL PLAN
BLUE ISLAND, IL M.P. DC-15.71

DESIGNED	DIGITIZED	CHECKED	DATE
XRL	XRL	XRL	10-25-10

01-29-13	DESIGN DATE	REV. NO.	DRAWING	SHEET NO	FILE	SHEET
	10-25-10	2 1	-----	-----	DC01548	S02

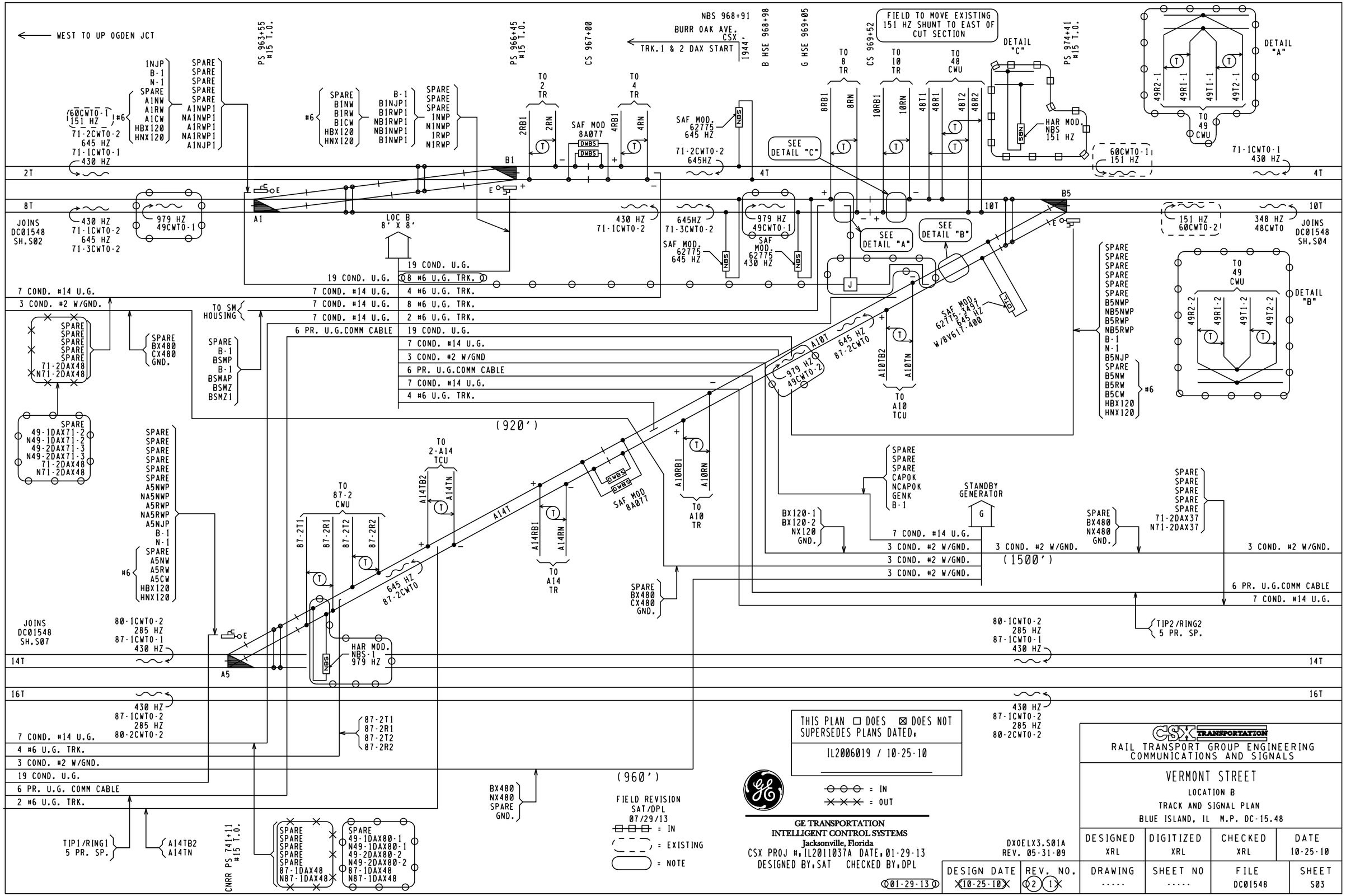
WEST TO UP OGDEN JCT
PS 963+55 #15 T.O.
PS 966+45 #15 T.O.
CS 967+00
NBS 968+91
BURR OAK AVE. CSX
TRK.1 & 2 DAX START
1944'
B HSE 968+98
G HSE 969+05
CS 969+52
FIELD TO MOVE EXISTING 151 HZ SHUNT TO EAST OF CUT SECTION
PS 974+41 #15 T.O.
DETAIL "C"
DETAIL "A"
DETAIL "B"
TO 2 TR
TO 4 TR
TO 8 TR
TO 10 TR
TO 48 CWU
TO 49 CWU
SAF MOD 8A077
SAF MOD. 62775 645 HZ
SAF MOD. 62775 430 HZ
HAR MOD. NBS 151 HZ
SEE DETAIL "C"
SEE DETAIL "A"
SEE DETAIL "B"
LOC B 8' X 8'
JOINS DC01548 SH.S02
JOINS DC01548 SH.S04
JOINS DC01548 SH.S07
TO SM HOUSING
TO 2-A14 TCU
TO 87-2 CWU
TO A10 TCU
TO A10 TR
TO A14 TR
STANDBY GENERATOR
(920')
(1500')
(960')
HAR MOD. NBS-1 979 HZ
CNRR PS 741+11 #15 T.O.
TIP1/RING1 5 PR. SP.
TIP2/RING2 5 PR. SP.
THIS PLAN ☐ DOES ☒ DOES NOT SUPERSEDES PLANS DATED,
IL2006019 / 10-25-10
FIELD REVISION SAT/DPL 07/29/13
= IN
= EXISTING
= NOTE
= IN
= OUT
GE TRANSPORTATION INTELLIGENT CONTROL SYSTEMS
Jacksonville, Florida
CSX PROJ #, IL2011037A DATE, 01-29-13
DESIGNED BY, SAT CHECKED BY, DPL
01-29-13
DXOELX3.S01A
REV. 05-31-09
CSX TRANSPORTATION
RAIL TRANSPORT GROUP ENGINEERING
COMMUNICATIONS AND SIGNALS
VERMONT STREET
LOCATION B
TRACK AND SIGNAL PLAN
BLUE ISLAND, IL M.P. DC-15.48
DESIGNED XRL
DIGITIZED XRL
CHECKED XRL
DATE 10-25-10
DESIGN DATE 10-25-10
REV. NO. 2 1
DRAWING -----
SHEET NO -----
FILE DC01548
SHEET S03

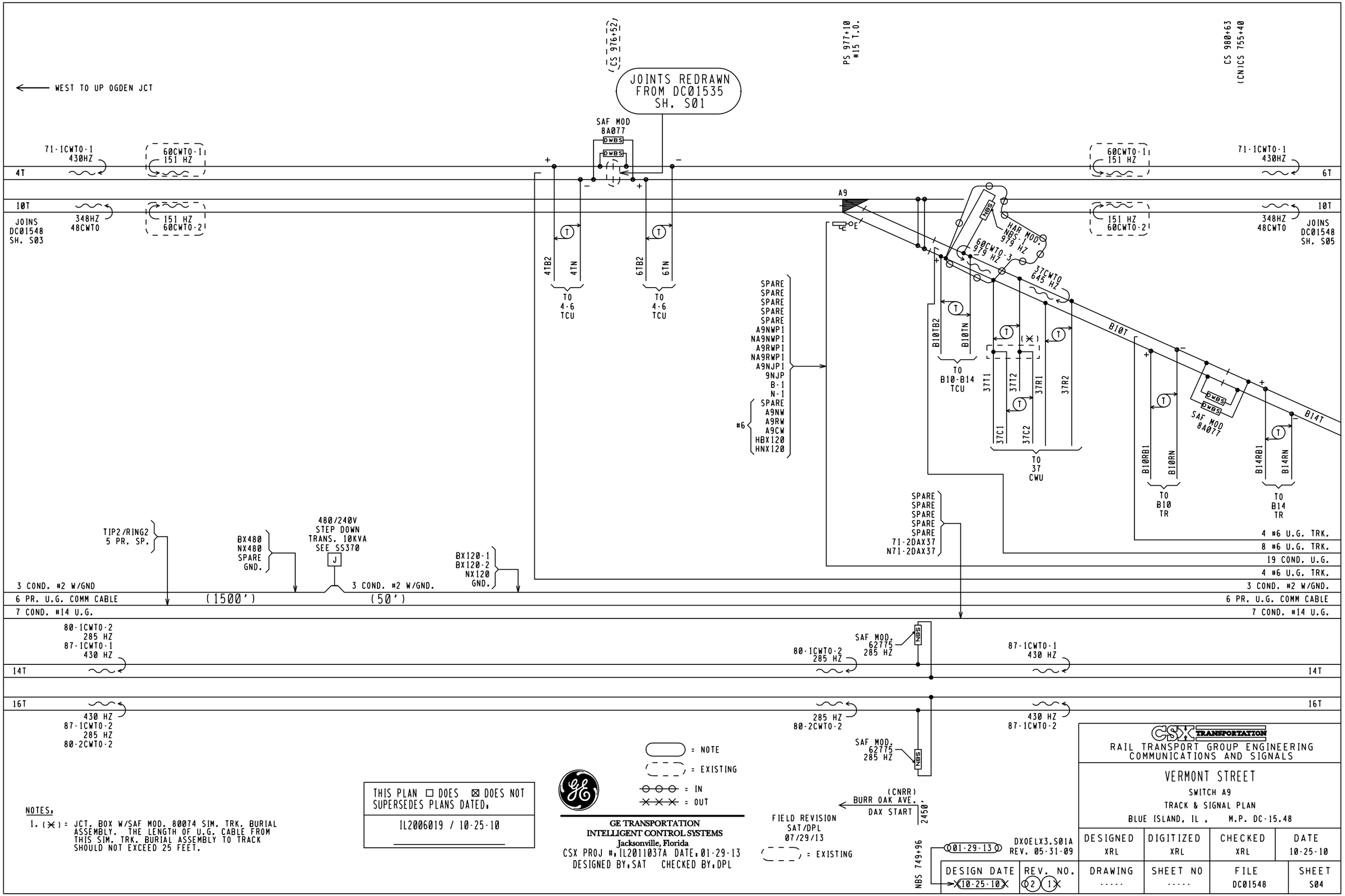

NOTES:

1. (✕) = JCT. BOX W/SAF MOD. 80074 SIM. TRK. BURIAL ASSEMBLY. THE LENGTH OF U.G. CABLE FROM THIS SIM. TRK. BURIAL ASSEMBLY TO TRACK SHOULD NOT EXCEED 25 FEET.

THIS PLAN ☐ DOES ☒ DOES NOT SUPERSEDES PLANS DATED,

IL2006019 / 10-25-10

GE TRANSPORTATION
INTELLIGENT CONTROL SYSTEMS
Jacksonville, Florida
CSX PROJ #, IL2011037A DATE, 01-29-13
DESIGNED BY, SAT CHECKED BY, DPL

CSX TRANSPORTATION
RAIL TRANSPORT GROUP ENGINEERING
COMMUNICATIONS AND SIGNALS

VERMONT STREET
SWITCH A9
TRACK & SIGNAL PLAN
BLUE ISLAND, IL , M.P. DC-15.48

DESIGNED	DIGITIZED	CHECKED	DATE
XRL	XRL	XRL	10-25-10

DESIGN DATE	REV. NO.	DRAWING	SHEET NO	FILE	SHEET
10-25-10	2 1	-----	-----	DC01548	S04

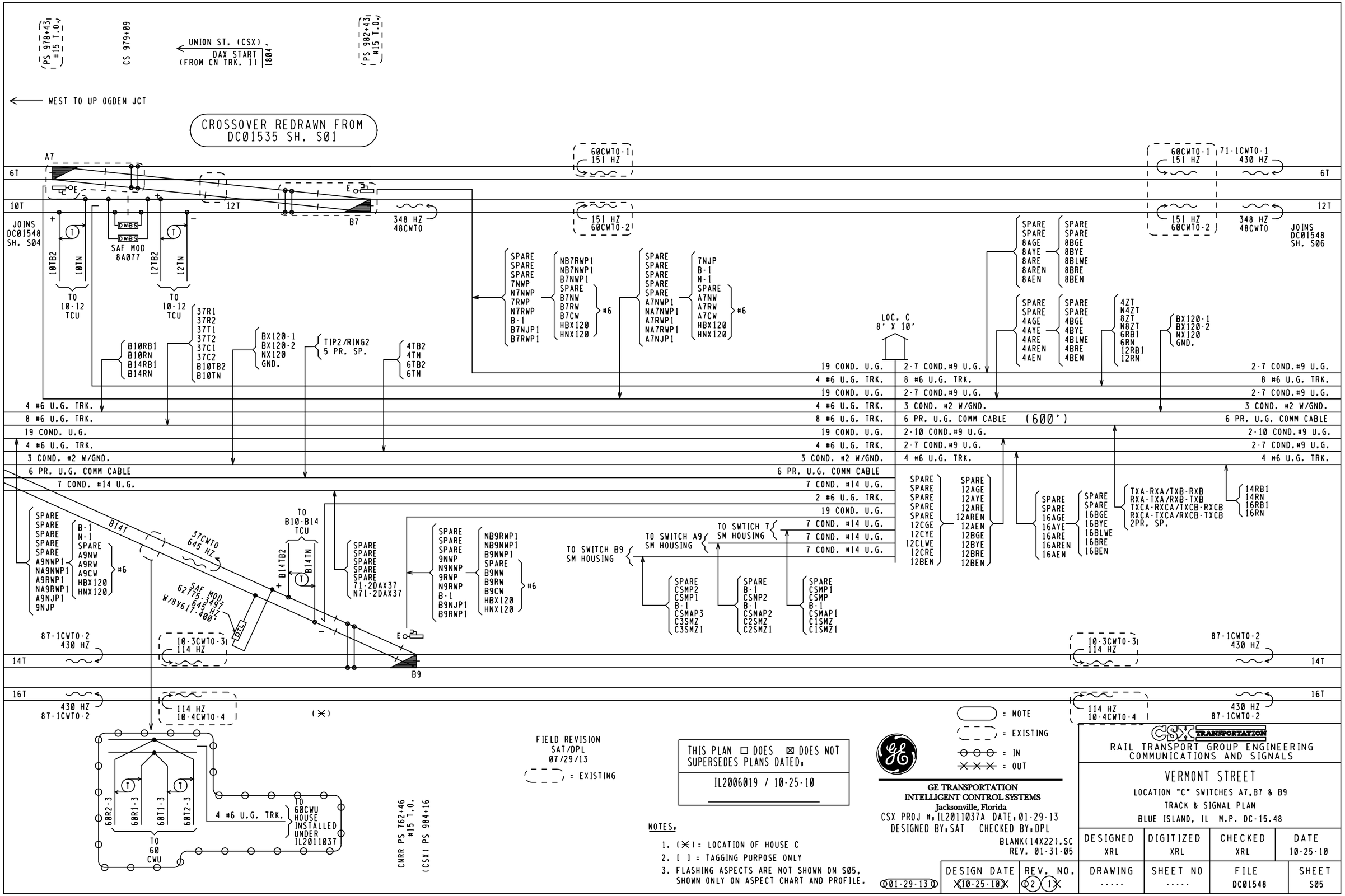
(PS 978+43 #15 T.O.)
CS 979+09
UNION ST. (CSX)
DAX START (FROM CN TRK. 1)
1804'
(PS 982+43 #15 T.O.)
WEST TO UP OGDEN JCT
CROSSOVER REDRAWN FROM DC01535 SH. S01
A7
B7
B9
6T
10T
12T
14T
16T
JOINS DC01548 SH. S04
JOINS DC01548 SH. S06
SAF MOD 8A077
10TB2
10TN
12TB2
12TN
TO 10-12 TCU
B14T
B14TB2
B14TN
TO B10-B14 TCU
37CWTO 645 HZ
SAF MOD 62775-3491 645 HZ W/8V617-400
60CWTO-1 151 HZ
151 HZ 60CWTO-2
348 HZ 48CWTO
71-1CWTO-1 430 HZ
87-1CWTO-2 430 HZ
10-3CWTO-3 114 HZ
114 HZ 10-4CWTO-4
430 HZ 87-1CWTO-2
LOC. C 8' X 10'
19 COND. U.G.
4 #6 U.G. TRK.
2-7 COND.#9 U.G.
8 #6 U.G. TRK.
3 COND. #2 W/GND.
6 PR. U.G. COMM CABLE (600')
2-10 COND.#9 U.G.
7 COND. #14 U.G.
2 #6 U.G. TRK.
TO SWITCH A9 SM HOUSING
TO SWITCH 7 SM HOUSING
TO SWITCH B9 SM HOUSING
TXA-RXA/TXB-RXB
RXA-TXA/RXB-TXB
TXCA-RXCA/TXCB-RXCB
RXCA-TXCA/RXCB-TXCB
2PR. SP.
60R2-3
60R1-3
60T1-3
60T2-3
TO 60 CWU
TO 60CWU HOUSE INSTALLED UNDER IL2011037
CNRR PS 762+46 #15 T.O.
(CSX) PS 984+16
= NOTE
= EXISTING
= IN
= OUT
FIELD REVISION SAT/DPL 07/29/13
THIS PLAN ☐ DOES ☒ DOES NOT SUPERSEDES PLANS DATED,
IL2006019 / 10-25-10
NOTES,
1. (✕) = LOCATION OF HOUSE C
2. [ ] = TAGGING PURPOSE ONLY
3. FLASHING ASPECTS ARE NOT SHOWN ON S05, SHOWN ONLY ON ASPECT CHART AND PROFILE.
GE TRANSPORTATION
INTELLIGENT CONTROL SYSTEMS
Jacksonville, Florida
CSX PROJ #,IL2011037A DATE,01-29-13
DESIGNED BY,SAT CHECKED BY,DPL
BLANK(14X22).SC
REV. 01-31-05
CSX TRANSPORTATION
RAIL TRANSPORT GROUP ENGINEERING
COMMUNICATIONS AND SIGNALS
VERMONT STREET
LOCATION "C" SWITCHES A7,B7 & B9
TRACK & SIGNAL PLAN
BLUE ISLAND, IL M.P. DC-15.48
DESIGNED XRL
DIGITIZED XRL
CHECKED XRL
DATE 10-25-10
DRAWING -----
SHEET NO -----
FILE DC01548
SHEET S05
01-29-13
DESIGN DATE 10-25-10
REV. NO. 2 1

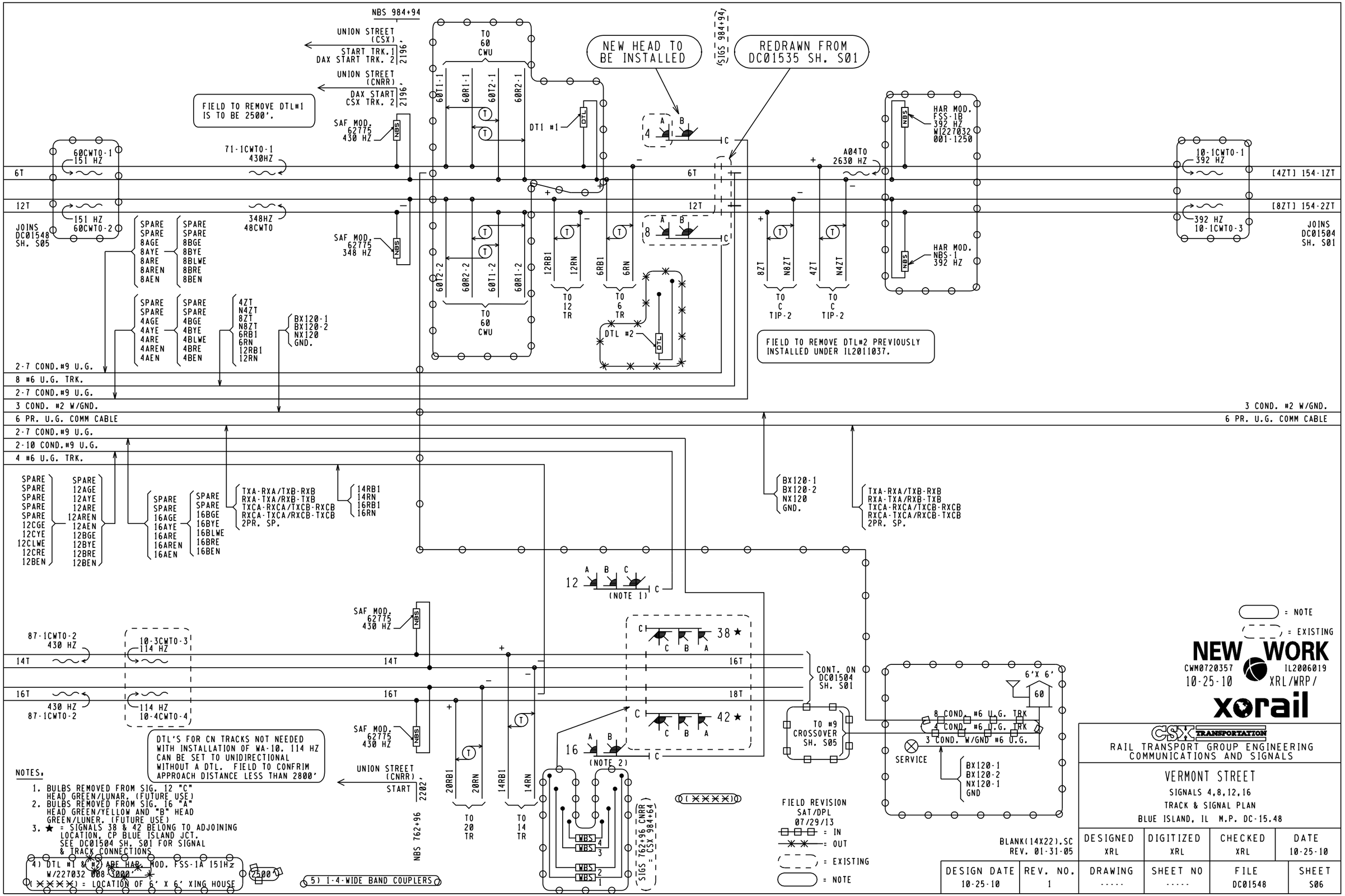

NOTES:

1. BULBS REMOVED FROM SIG. 12 "C" HEAD GREEN/LUNAR. (FUTURE USE)
2. BULBS REMOVED FROM SIG. 16 "A" HEAD GREEN/YELLOW AND "B" HEAD GREEN/LUNER. (FUTURE USE)
3. ★ = SIGNALS 38 & 42 BELONG TO ADJOINING LOCATION, CP BLUE ISLAND JCT. SEE DC01504 SH. S01 FOR SIGNAL & TRACK CONNECTIONS
4. DTL #1 & #2 ARE HAR. MOD. FSS-1A 151Hz W/227032 008-3000
(XXXXX) = LOCATION OF 6' X 6' XING HOUSE
5. 1-4-WIDE BAND COUPLERS

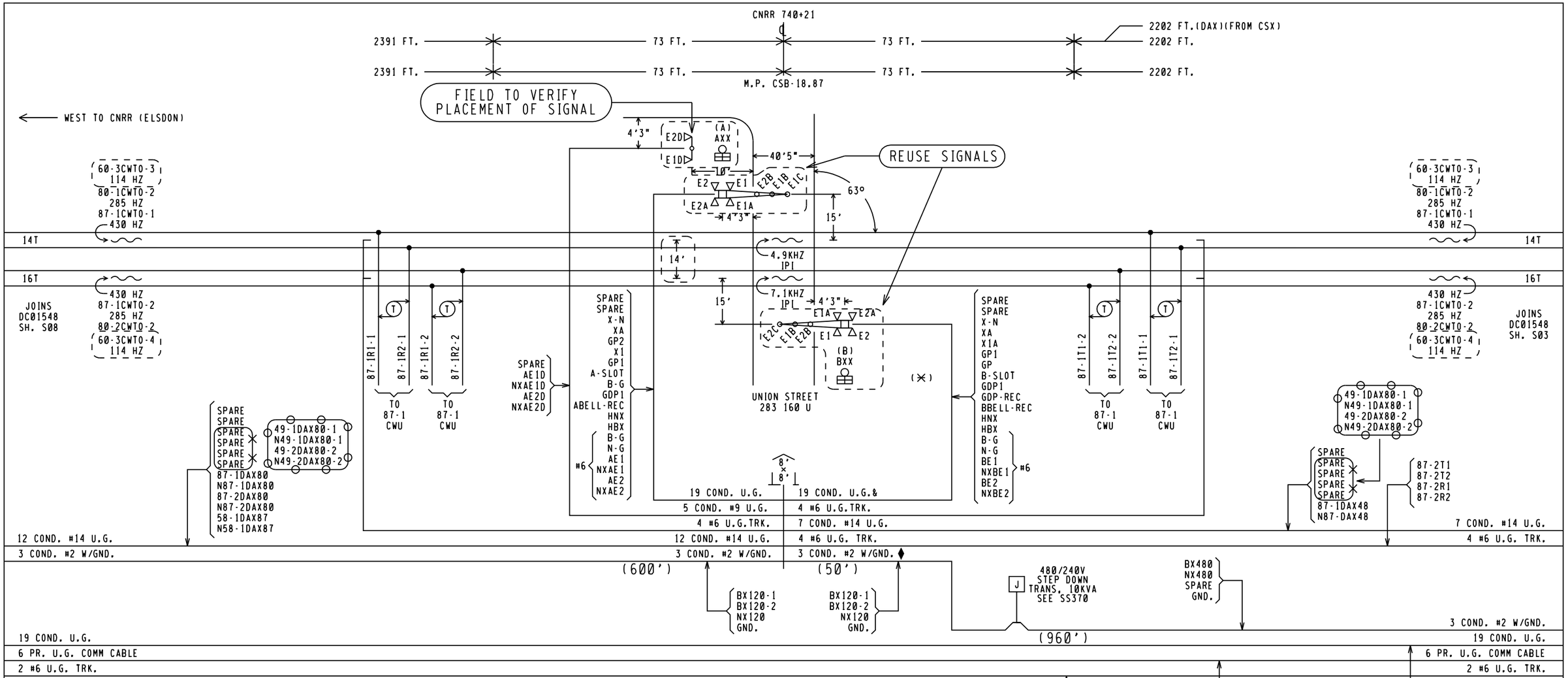

APPROACH LENGTHS TABLE DC, AFO, TYPE C, MOTION, CWT, OR OTHER	WESTWARD TRACK 1 CWT	EASTWARD TRACK 1 CWT	WESTWARD TRACK 2 CWT	EASTWARD TRACK 2 CWT	EASTWARD CSX CWT
STANDARD MINIMUM WARNING TIME IN SECONDS	25	25	25	25	25
ROADWAY GATE TIME IN SECONDS	5	5	5	5	5
CLEARANCE TIME IN SECONDS	3	3	3	3	3
DOT TRAFFIC LIGHT SIMULTANEOUS PREEMPT TIME IN SECONDS ✳	0	0	0	0	0
DESIGNED WARNING TIME FOR TRAINS AT TIME TABLE SPEED	33 SEC.	33 SEC.	33 SEC.	33 SEC.	33 SEC.
DOT TRAFFIC LIGHT ADVANCE PREEMPT TIME IN SECONDS ✳	0	0	0	0	0
CONTROL EQUIPMENT DECISION TIME IN SECONDS	4	4	4	4	4
DESIGNED DETECTION TIME FOR TRAINS AT TIME TABLE SPEED	37 SEC.	37 SEC.	37 SEC.	37 SEC.	37 SEC.
TIME TABLE MAXIMUM TRAIN SPEED IN MILES PER HOUR	40	40/30	40	40/30	30
BUFFER SPEED IN MILES PER HOUR	5	5	5	5	5
TOTAL WARNING SYSTEM DESIGN SPEED IN MILES PER HOUR	45	45	45	45	35
APPROACH DISTANCE TO ISLAND EDGE IN FEET	2391	2202	2391	2202	1848
HALF WIDTH OF ISLAND IN FEET	73	73	73	73	73
APPROXIMATE MILE POSTS FOR APPROACH CIRCUIT	18.40	19.15	18.40	19.15	DC-15.35 (ELS-19.23)

✳AUTHORIZING AGENCY, NONE
✳DATE OF REQUIREMENT, NONE
✳AMOUNT OF TIME (SEC.), NONE

FIELD REVISION
SAT/DPL
07/29/13

= EXISTING

NOTES.

1. 20 WATT BULBS ON GAT ARMS ALL OTHERS TO BE 25 WATT BULBS.
2. GATE LENGTH (A) 24' (B) 24'
3. (✳) = LOCATION OF HOUSE
4. TRANSMITTER LEADS FOR MOTION OR PREDICTOR EQUIPMENT SHOULD BE CONNECTED ON THE BUNGALOW OR SHORT LEAD SIDE OF THE CROSSING.
5. ISLAND TRACK LEADS SHOULD BE CONNECTED 50 FEET FROM ROAD EDGE BUT ON NARROW ROADS (20' OR LESS) ISLAND LENGTH SHALL BE 120 FEET.
6. WARNING SYSTEM APPROACH CIRCUIT DISTANCES ARE TO BE MEASURED FROM THE ISLAND TRACK CONNECTIONS.
7. ♦ = CABLE LENGTH TO BE KEPT AS SHORT AS POSSIBLE, NOT TO EXCEED 50'.

A14TB2
A14TN

TIP1/RING1
5 PR. SP.

#6 SPARE A5NW A5RW A5CW HBX120 HNX120

SPARE SPARE SPARE SPARE SPARE SPARE A5NWP NA5NWP A5RWP NA5RWP A5NJP B-1 N-1

THIS PLAN ☐ DOES ☒ DOES NOT SUPERSEDES PLANS DATED,

IL2006019 / 10-25-10

= NOTE
= EXISTING
= IN
= OUT

GE TRANSPORTATION
INTELLIGENT CONTROL SYSTEMS
Jacksonville, Florida
CSX PROJ #,IL2011037A DATE,01-29-13
DESIGNED BY,SAT CHECKED BY,DPL

2TRKPMD3RCPML.S01
REV. 12-14-09

CSX TRANSPORTATION
RAIL TRANSPORT GROUP ENGINEERING
COMMUNICATIONS AND SIGNALS

VERMONT STREET
UNION ST. (283160U)
(CN TRACKS)
TRACK AND SIGNAL PLAN
BLUE ISLAND, IL M.P. CSB-18.87

DESIGNED	DIGITIZED	CHECKED	DATE
XRL	XRL	XRL	10-25-10

01-29-13	DESIGN DATE	REV. NO.	DRAWING	SHEET NO	FILE	SHEET
	10-25-10	2 1	-----	-----	DC01548	S07

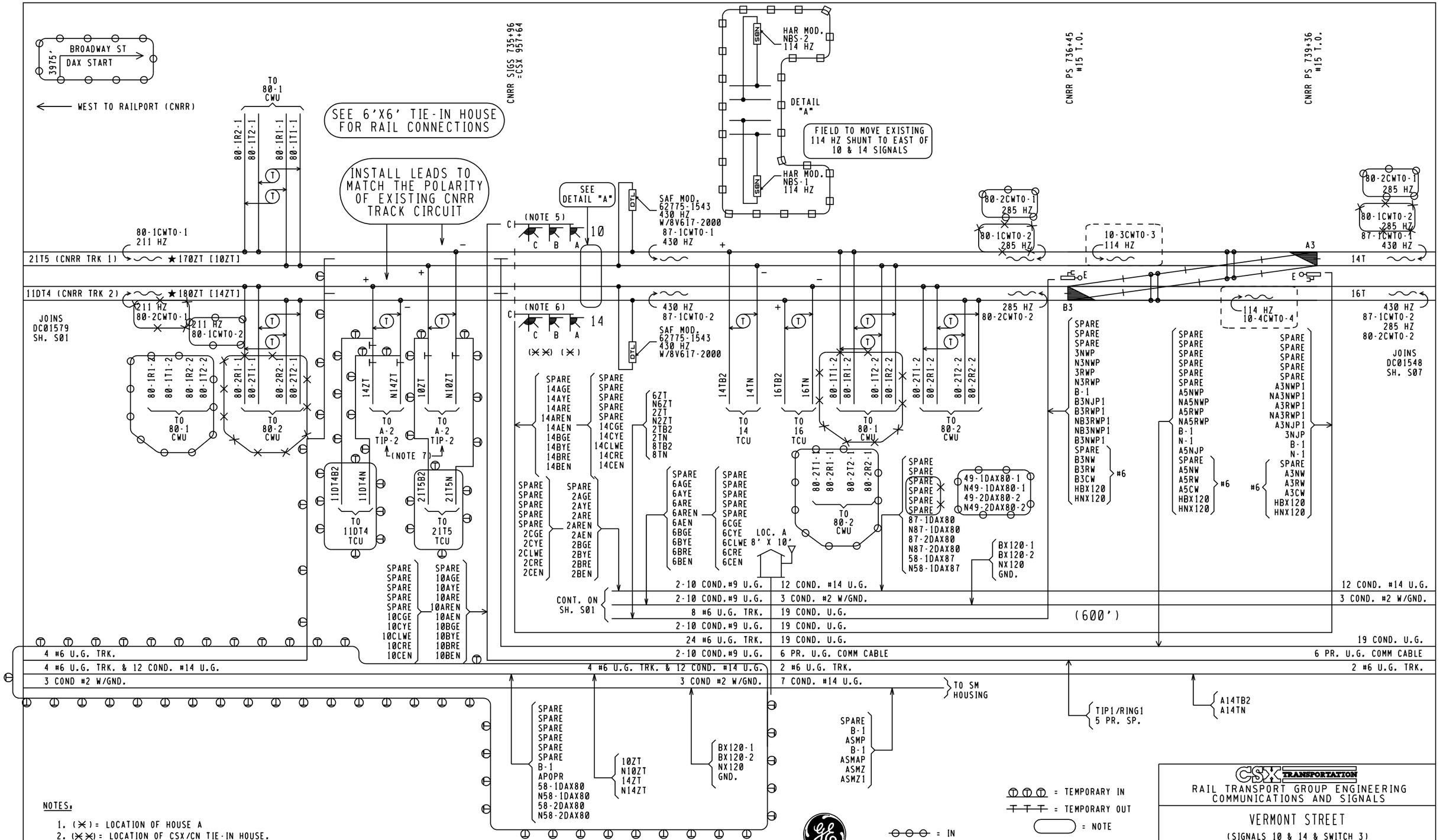

NOTES:

1. (✕) = LOCATION OF HOUSE A
2. (✕✕) = LOCATION OF CSX/CN TIE-IN HOUSE.
3. FLASHING ASPECTS ARE NOT SHOWN ON S08, SHOWN ONLY ON ASPECT CHART AND PROFILE.
4. ★ = FUTURE USE
5. BULBS REMOVED FROM SIG. 10 "A" HEAD GREEN/YELLOW AND "C" HEAD LUNAR. (FUTURE USE)
6. BULBS REMOVED FROM SIG. 14 "C" HEAD LUNAR. (FUTURE USE)
7. THE 4 TRACK WIRES FOR WEST SIDE OF JOINTS ARE FOR FUTURE EC TRACK CIRCUITS 10ZT & 14ZT.

FIELD REVISION
SAT/DPL
07/29/13

THIS PLAN ☐ DOES ☒ DOES NOT SUPERSEDES PLANS DATED:

IL2006019 / 10-25-10

GE TRANSPORTATION
INTELLIGENT CONTROL SYSTEMS
Jacksonville, Florida
CSX PROJ #: IL2011037A DATE: 01-29-13
DESIGNED BY: SAT CHECKED BY: DPL

01-29-13

CSX TRANSPORTATION
RAIL TRANSPORT GROUP ENGINEERING
COMMUNICATIONS AND SIGNALS

VERMONT STREET
(SIGNALS 10 & 14 & SWITCH 3)
TRACK AND SIGNAL PLAN
BLUE ISLAND, IL M.P. DC-15.48

DXOELX3.S01A
REV. 05-31-09

DESIGNED	DIGITIZED	CHECKED	DATE
XRL	XRL	XRL	10-25-10

DESIGN DATE	REV. NO.	DRAWING	SHEET NO	FILE	SHEET
10-25-10	2 1	-----	-----	DC01548	S08

49CWU

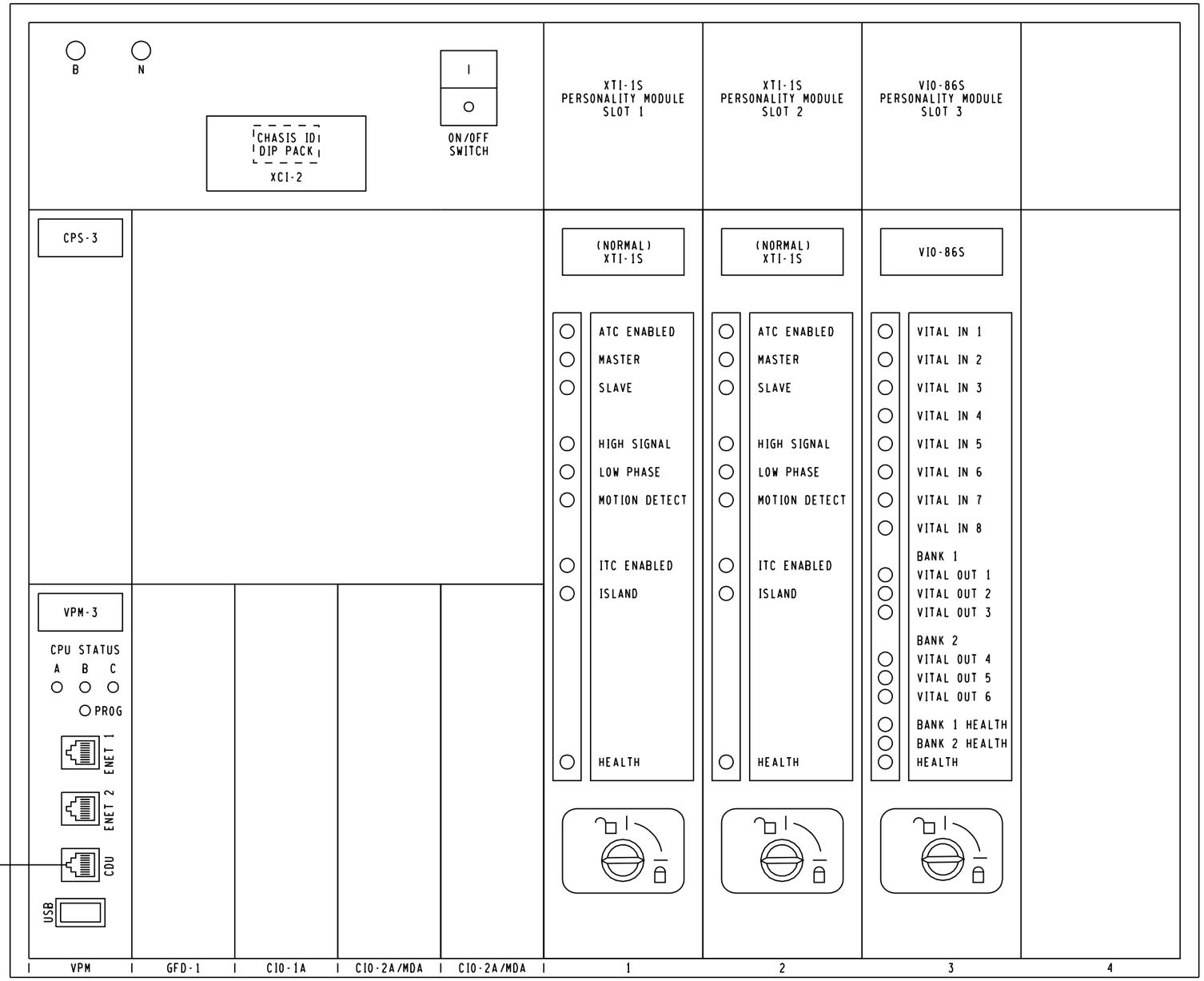

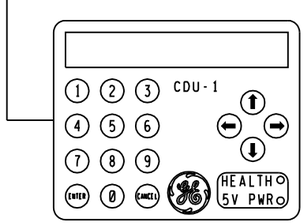

MODULE LEGEND:

CDU-1 = CONTROL DISPLAY UNIT
CPS-3 = CENTRAL POWER SUPPLY
VPM-3 = VITAL PERIPHERAL MASTER
GFD-1 = GROUND FAULT DETECTOR
CIO-1A = COMMUNICATION INPUT/OUTPUT
CIO-2A = COMMUNICATION INPUT/OUTPUT
CIO-MDA = COMMUNICATION INPUT/OUTPUT
XCI-2 = CHASSIS INFORMATION
VLD-R16S = VITAL LAMP DRIVER
VIO-86S = VITAL INPUTS/OUTPUTS

TYPICAL INSTALLATION OF EPROM & DIP SHUNT

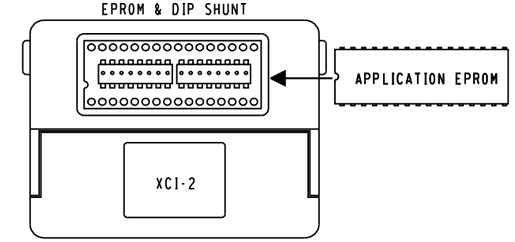

PROGRAM NAME:

CHASSIS ID:

CHASSIS ID DIP SHUNTS LOCATED ON BACKPLANE UNDERNEATH XCI-2 MODULE

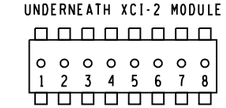

○ = TAB INTACT (MADE)
● = TAB PUNCHED OUT (BROKEN)

VITAL SELECTION ID-N/A

VITAL SELECTION DIP SHUNTS LOCATED INSIDE XCI-2 MODULE UNDERNEATH EPROM

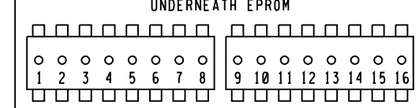

○ = TAB INTACT (MADE)
● = TAB PUNCHED OUT (BROKEN)

LOCATION B CROSSING (49CWU)

NEW WORK

GE TRANSPORTATION
INTELLIGENT CONTROL SYSTEMS
Jacksonville, Florida

CSX PROJ #: IL2011037A DATE: 01-29-13
DESIGNED BY: SAT CHECKED BY: DPL

CSX TRANSPORTATION
RAIL TRANSPORT GROUP ENGINEERING
COMMUNICATIONS AND SIGNALS

VERMONT STREET

ELECTROLOGIXS MODULE XP4 CONFIGURATION (49CWU)
BLUE ISLAND, IL M.P. DC-15.48

SEE0SELX3.E04WCM
REV. 08-31-10

DESIGNED	DIGITIZED	CHECKED	DATE
GET/SAT	GET/SAT	GET/DPL	01-29-13

DESIGN DATE	REV. NO.	DRAWING	SHEET NO	FILE	SHEET
01-29-13	2	-----	-----	DC01548	E17

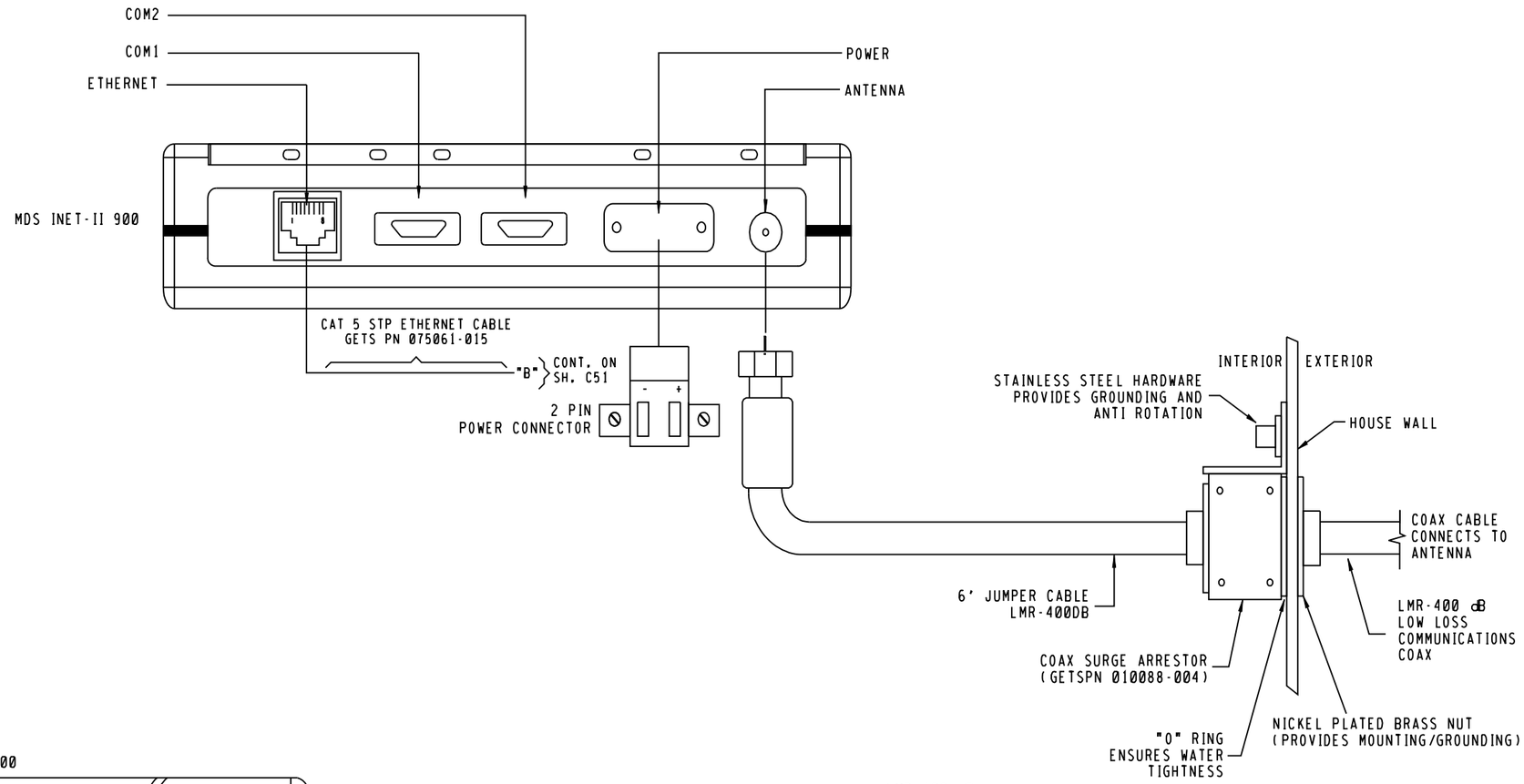

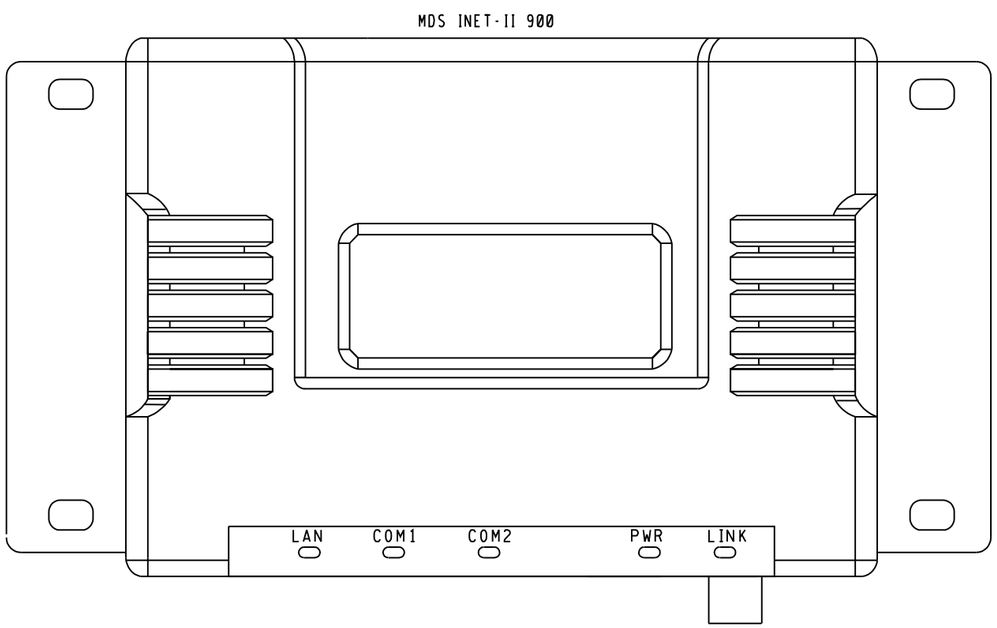

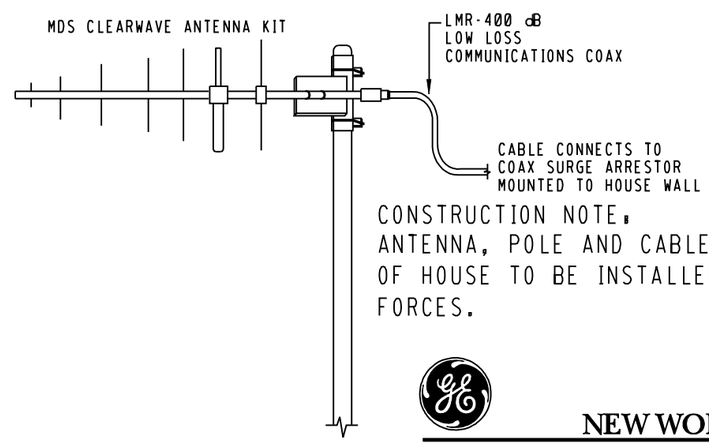

CONSTRUCTION NOTE:
ANTENNA, POLE AND CABLE TO OUTSIDE OF HOUSE TO BE INSTALLED BY FIELD FORCES.

LOCATION B

NEW WORK

GE TRANSPORTATION
INTELLIGENT CONTROL SYSTEMS
Jacksonville, Florida
CSX PROJ #:1L2011037A DATE:01-29-13
DESIGNED BY:SAT CHECKED BY:DPL

DX0ELX3.E07
REV. 05-31-09

CSX TRANSPORTATION
RAIL TRANSPORT GROUP ENGINEERING
COMMUNICATIONS AND SIGNALS

VERMONT STREET

ACCESS POINT INET-II 900 RADIO DETAILS
BLUE ISLAND, IL M.P. DC-15.48

DESIGNED	DIGITIZED	CHECKED	DATE
GET/SAT	GET/SAT	GET/DPL	01-29-13

DESIGN DATE	REV. NO.	DRAWING	SHEET NO	FILE	SHEET
01-29-13	2	-----	-----	DC01548	E18

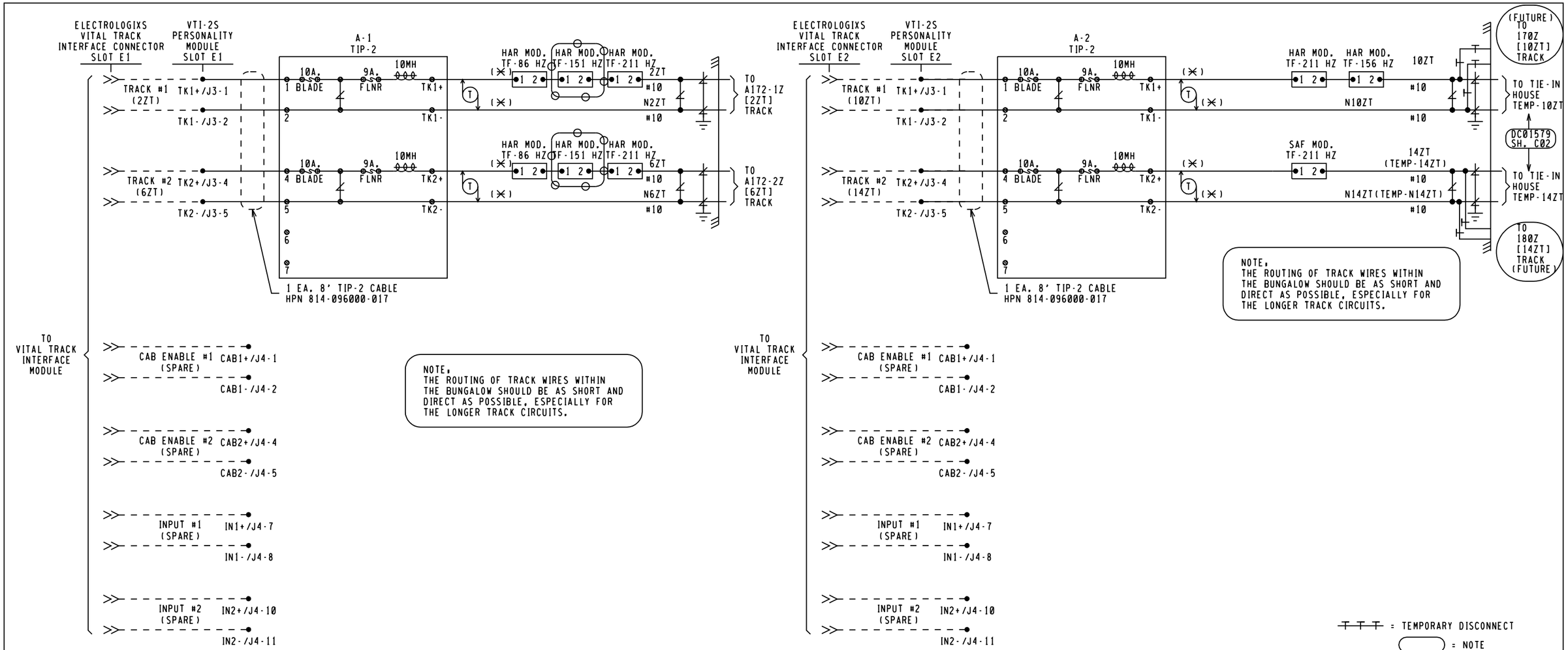

A-2 TIP-2 IS CONNECTED DIRECTLY TO 1 TIP-2 IN TEMP. TIE-IN HOUSE THROUGH U.G. TRACK CABLE

VTI-2S PERSONALITY MODULE SLOT E1 PLUG CONNECTORS

J3		J4	
TK1+ ■	1	CAB1+ □	1
TK1- ■	2	CAB1- □	2
— □	3	— □	3
TK2+ ■	4	CAB2+ □	4
TK2- ■	5	CAB2- □	5
— □	6	— □	6
— □	7	IN1+ □	7
		IN1- □	8
		— □	9
		IN2+ □	10
		IN2- □	11

■ = WIRE PRESENT

VTI-2S PERSONALITY MODULE SLOT E2 PLUG CONNECTORS

J3		J4	
TK1+ ■	1	CAB1+ □	1
TK1- ■	2	CAB1- □	2
— □	3	— □	3
TK2+ ■	4	CAB2+ □	4
TK2- ■	5	CAB2- □	5
— □	6	— □	6
— □	7	IN1+ □	7
		IN1- □	8
		— □	9
		IN2+ □	10
		IN2- □	11

■ = WIRE PRESENT

THIS PLAN ☐ DOES ☒ DOES NOT SUPERSEDES PLANS DATED,

IL2006019 / 10-25-10

~~T T T~~ = TEMPORARY DISCONNECT

( ) = NOTE

NEW WORK
CWM0720357 IL2006019
10-25-10 XRL/WRP/
xorail

NOTES,

1. [ ] = TAGGING PURPOSES ONLY
2. ---- = INTERNAL CONNECTION
3. (✕) = WIRED BY RAILROAD

(- - -) = EXISTING
~~O O O~~ = IN
~~X X X~~ = OUT

GE TRANSPORTATION
INTELLIGENT CONTROL SYSTEMS
Jacksonville, Florida
CSX PROJ #,IL2011037A DATE,01-29-13
DESIGNED BY,SAT CHECKED BY,DPL

DX0ELX3.C03
REV. 05-31-09

LOCATION A

CSX TRANSPORTATION
RAIL TRANSPORT GROUP ENGINEERING
COMMUNICATIONS AND SIGNALS

VERMONT STREET

ELECTROLOGIXS TRACK CIRCUITS
BLUE ISLAND, IL M.P. DC-15.48

DESIGNED	DIGITIZED	CHECKED	DATE
XRL	XRL	XRL	10-25-10

01-29-13	DESIGN DATE	REV. NO.	DRAWING	SHEET NO	FILE	SHEET
	10-25-10	2 1	-----	-----	DC01548	C03

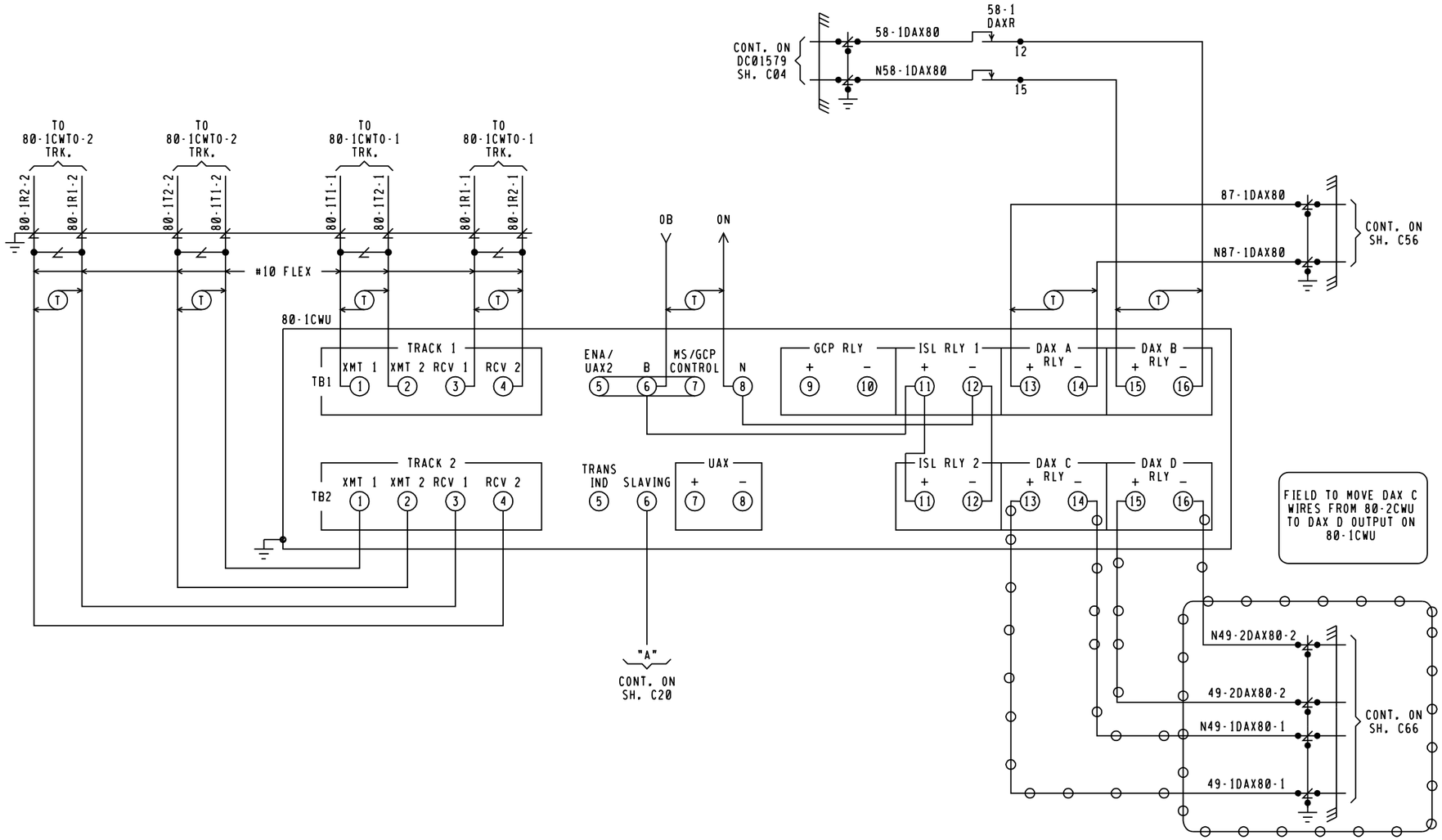

FIELD TO MOVE DAX C WIRES FROM 80-2CWU TO DAX D OUTPUT ON 80-1CWU

80-1CWU
3000D2 MODULES REQUIRED

M1	M2	M3	M4	M5	M6	M7	M8	M9	M10
80211 IPI ISLAND (NOT USED)	80211 IPI ISLAND (NOT USED)	80012 TRANSCEIVER	80012 TRANSCEIVER	80013 RELAY DRIVE	80214 PROCESSOR	80115 RECORDER (NOT USED)	80016 DAX	80016 DAX (NOT USED)	80020-1 CONTROL INTERFACE

M11	M12	M13	M14	M15	M16	M17	M18	M19	M20	M21
80211 IPI ISLAND (NOT USED)	80211 IPI ISLAND (NOT USED)	80012 TRANSCEIVER	80012 TRANSCEIVER	80013 RELAY DRIVE	80214 PROCESSOR	80115 RECORDER (NOT USED)	80016 DAX	80016 DAX (NOT USED)	80020-2 CONTROL INTERFACE	80028 TRANSFER TIMER

FRONT VIEW

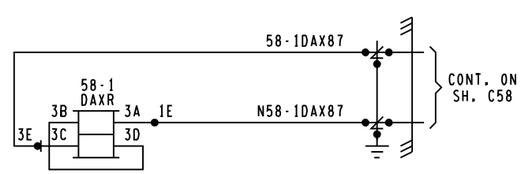

FIELD REVISION
SAT/DPL
08/08/13
= IN
= OUT
= EXISTING
= NOTE

THIS PLAN ☐ DOES ☒ DOES NOT SUPERSEDES PLANS DATED,

IL2006019 / 10-25-10

= IN
= OUT

IPI
MODULE 80211

SLOT M1 & M11
NOT USED

IPI
MODULE 80211

SLOT M2 & M12
NOT USED

MODULE 80028
S4 DIP SWITCH POSITIONS *

SWITCH #	16	8	4	2	1
SWITCH POSITION	UP	DOWN	UP	DOWN	UP

*MAY BE SET PER FIELD CONDITIONS

MODULE 80028
S1 DIP SWITCH POSITIONS

SWITCH #	A	B	C	D
DAX USED	LEFT	LEFT	RIGHT	RIGHT

LEFT

LEFT INDICATES DAX USED

LEFT

GE TRANSPORTATION
INTELLIGENT CONTROL SYSTEMS
Jacksonville, Florida
CSX PROJ #,IL2011037A DATE,01-29-13
DESIGNED BY,SAT CHECKED BY,DPL

3000D2.C01
REV. 05-06-05

LOCATION A

CSX TRANSPORTATION
RAIL TRANSPORT GROUP ENGINEERING
COMMUNICATIONS AND SIGNALS

VERMONT STREET

80-1CWU CROSSING DETECTION CIRCUITRY
BLUE ISLAND, IL M.P. DC-15.48

DESIGNED	DIGITIZED	CHECKED	DATE
XRL	XRL	XRL	10-25-10

01-29-13	DESIGN DATE	REV. NO.	DRAWING	SHEET NO	FILE	SHEET
	10-25-10	2 1	-----	-----	DC01548	C18