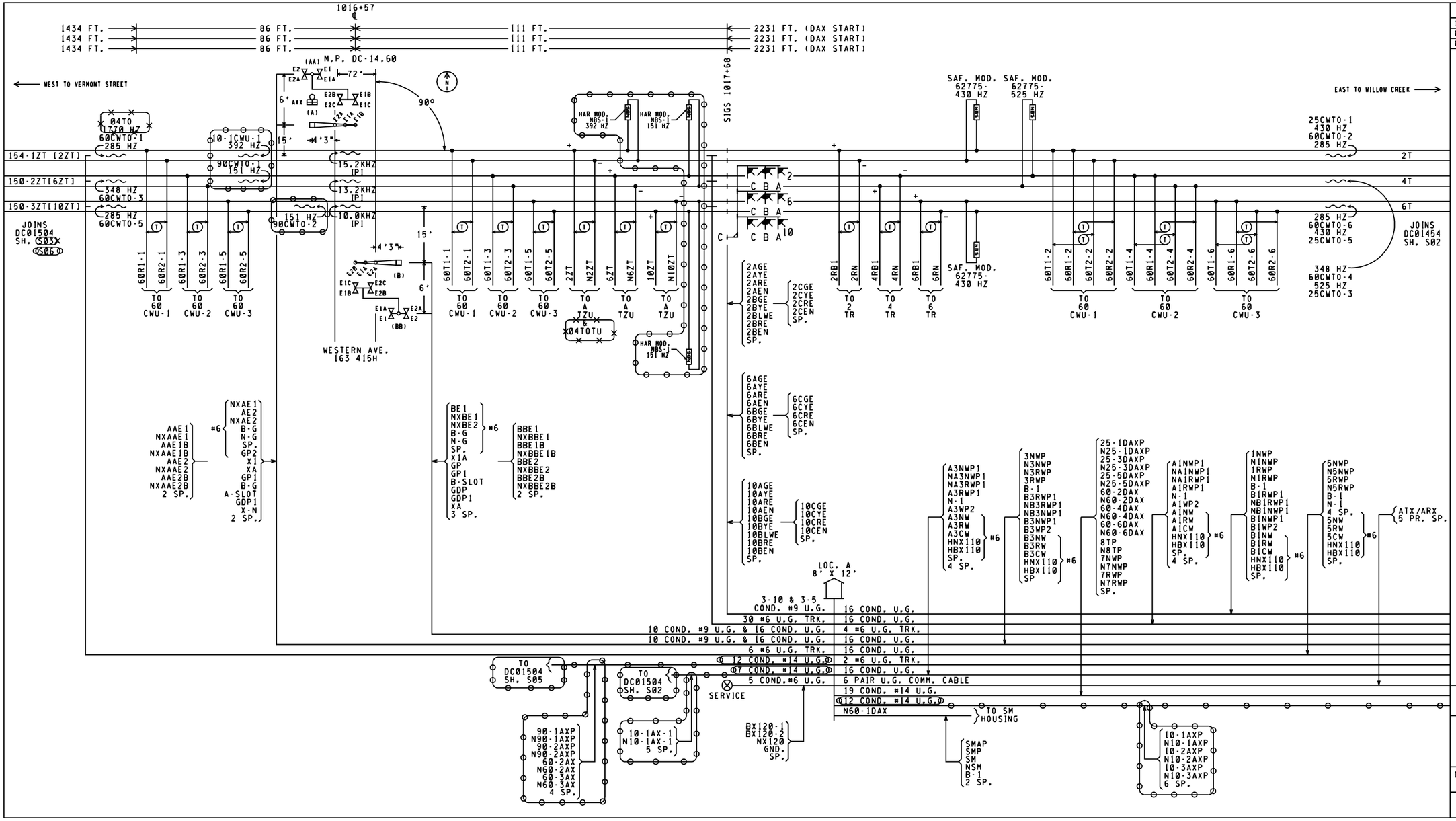

REVISIONS	
10-21-02 SWE	IL2002002
05-27-03 SWE	IL2002032
08-01-12 IRS IL2012032	

NOTES:

1. (✕) = LOCATION OF HOUSE
2. [ ] = TAGGING PURPOSE ONLY
3. 20 WATT BULBS ON GATE ARMS ALL OTHERS WILL BE 25 WATT BULBS.
4. LENGTH OF GATE (A) 32' GATE (B) 32' LENGTH OF CANTILEVER (AA) 20' (BB) 20'
5. (N) = APPROXIMATE COMPASS NORTH.
6. THE TRANSMITTER LEADS FOR MOTION OR PREDICTOR EQUIPMENT SHOULD BE CONNECTED ON THE BUNGALOW OR SHORT LEAD SIDE OF CROSSING.
7. WARNING SYSTEM APPROACH CIRCUIT DISTANCES ARE TO BE MEASURED FROM THE ISLAND TRACK CONNECTIONS.

FIELD SET
03/19/13

: IN
: OUT

GE TRANSPORTATION
INTELLIGENT CONTROL SYSTEMS
Jacksonville, Florida
CSX PROJ #: IL2011037A DATE: 01-29-13
DESIGNED BY: SAT CHECKED BY: DPL

CSX TRANSPORTATION
RAIL TRANSPORT GROUP ENGINEERING
COMMUNICATIONS AND SIGNALS

CHATHAM

TRACK AND SIGNAL PLAN
BLUE ISLAND, IL M.P. DC-14.54

DESIGNED	DIGITIZED	CHECKED	DATE
SWE/STL	SWE/JSH	SWE/MJH	03-22-02

NEXT FILE	NEXT SH	FILE	SHEET
DC01454	S02	DC01454	S01

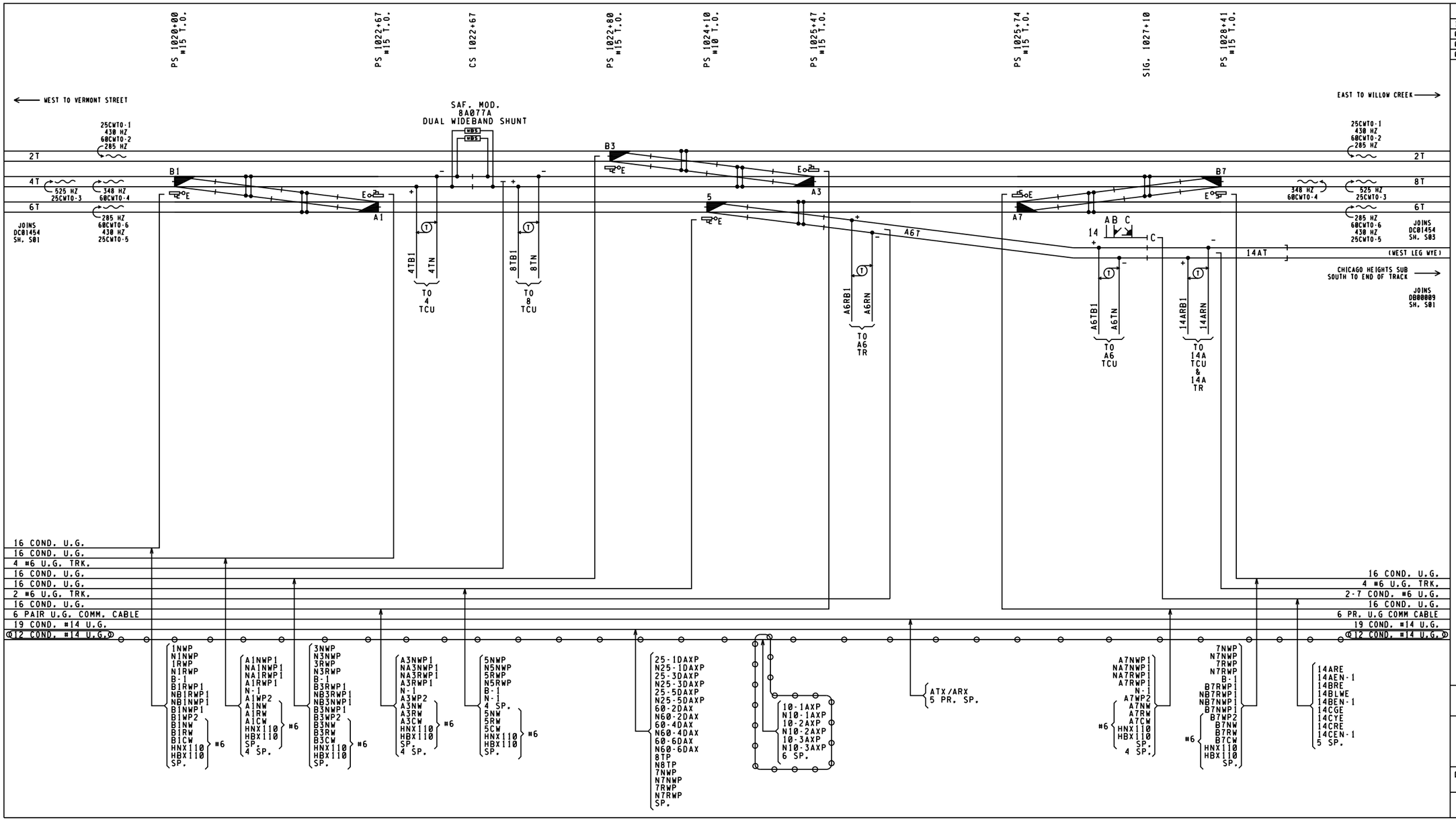

REVISIONS	
10-21-02 SWE	IL2002002
05-27-03 SWE	IL2002032
02-04-04 IRS IL1997024	
08-01-12 IRS IL2012032	

FIELD SET
03/19/13

: IN
: OUT

GE TRANSPORTATION
INTELLIGENT CONTROL SYSTEMS
Jacksonville, Florida
CSX PROJ #, IL2011037A DATE, 01-29-13
DESIGNED BY, SAT CHECKED BY, DPL

CSX TRANSPORTATION
RAIL TRANSPORT GROUP ENGINEERING
COMMUNICATIONS AND SIGNALS

CHATHAM

TRACK AND SIGNAL PLAN
BLUE ISLAND, IL M.P. DC-14.54

DESIGNED	DIGITIZED	CHECKED	DATE
SWE/STL	SWE/JSH	SWE/MJH	03-22-02

NEXT FILE	NEXT SH	FILE	SHEET
DC01454	S03	DC01454	S02

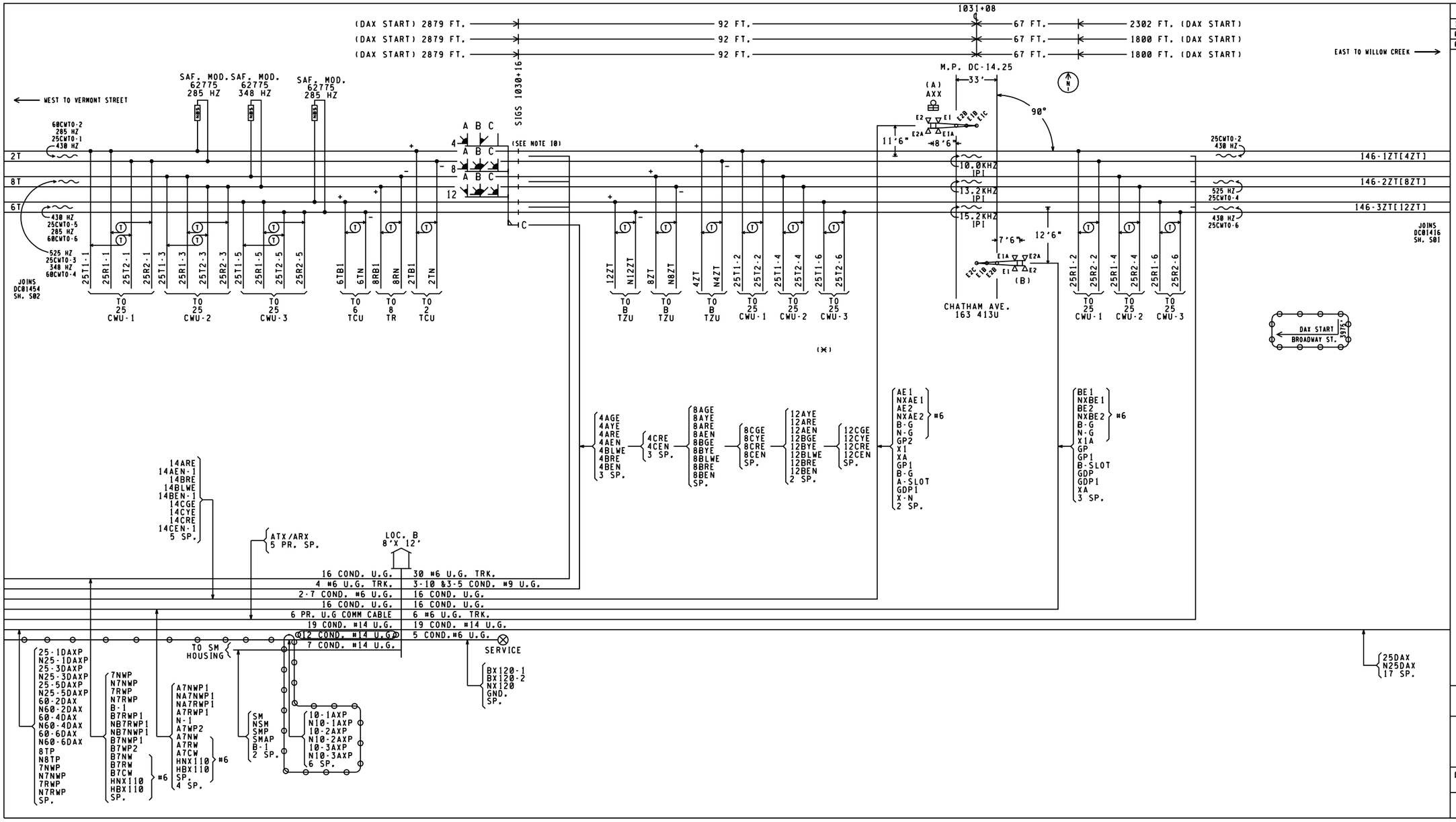

REVISIONS	
10-21-02 SWE	IL2002002
05-27-03 SWE	IL2002032
08-01-12 IRS IL2012032	

NOTES:

1) (✕) : LOCATION OF HOUSE
2) [ ] = TAGGING PURPOSE ONLY
3) 20 WATT BULBS ON GATE ARMS ALL OTHERS WILL BE 25 WATT BULBS.
4) LENGTH OF GATE (A) 25' GATE (B) 25'
5) (N) : APPROXIMATE COMPASS NORTH.
6) THE TRANSMITTER LEADS FOR MOTION OR PREDICTOR EQUIPMENT SHOULD BE CONNECTED ON THE BUNGALOW OR SHORT LEAD SIDE OF CROSSING.
7) ISLAND TRACK LEADS SHOULD BE CONNECTED 50 FEET FROM ROAD EDGE BUT ON NARROW ROADS (20' OR LESS) ISLAND LENGTH SHALL BE 120 FEET.
8) WARNING SYSTEM APPROACH CIRCUIT DISTANCES ARE TO BE MEASURED FROM THE ISLAND TRACK CONNNECTIONS.
9) FLASHING ASPECTS NOT SHOWN, SHOWN ONLY ON ASPECT CHART & PROFILE.
10) SIGNAL 4 "B" & "C" HEAD GREEN AND YELLOW TO BE BLANKED.

FIELD SET
03/19/13
⊖⊖⊖ : IN
✕✕✕ : OUT

GE TRANSPORTATION
INTELLIGENT CONTROL SYSTEMS
Jacksonville, Florida
CSX PROJ #.IL2011037A DATE.01-29-13
DESIGNED BY.SAT CHECKED BY.DPL

CSX TRANSPORTATION
RAIL TRANSPORT GROUP ENGINEERING
COMMUNICATIONS AND SIGNALS

CHATHAM

TRACK AND SIGNAL PLAN
BLUE ISLAND, IL M.P. DC-14.54

DESIGNED	DIGITIZED	CHECKED	DATE
SWE/STL	SWE/JSH	SWE/MJH	03-22-02
NEXT FILE	NEXT SH	FILE	SHEET
DC01454	G01	DC01454	S03

(TOP)

10-1AXR	10-2AXR	10-3AXR	25-1DAXR	25-3DAXR	25-5DAXR	60-2DAXR	60-4DAXR	60-6DAXR	60-2TOR	60-2AXR	60-3AXR
12 F	12 F	12 F	12 F	12 F	12 F	12 F	12 F	12 F	12	12 F	12 F
15 F	15 F	15 F	15 F	15 F	15 F	15	15 F	15	15	15	15
22	22	22	22	22	22	22	22	22	22	22	22
23	23	23	23 F	23 F	23 F	23	23 F	23 F	23 F	23	23
25	25	25	25 F	25 F	25 F	25	25	25	25	25	25
32	32	32	32	32	32	32	32	32	32 F	32	32
35	35	35	35	35	35	35	35	35	35	35	35
B8	B8	B8	B8	B8	B8	B8	B8	B8	B8	B8	B8
C30	C30	C30	C30	C30	C30	C30	C30	C30	C30	C30	C30

10-1BXR	10-2BXR	10-3BXR	XR	XPR	EOR	GPR	APOR	8TPPR	25-1EXSR	8TPR
12 F	12 F	12 F	12 FB	22 F	12 FB	12 B	12 FB	12 F	12 B	12
15 F	15 F	15 F	15 FB	25 F	15 FB	15 B	15 FB	15 F	15	15
22	22	22	22		32 FB	22	22 FB	22	22 B	22 B
23	23	23	23		35 FB	25	25 FB	23	23 F	23
25	25	25	25 F			32 F	32 F	25 F	25 F	25 F
32	32	32	32			35 B	35 F	32 FB	32	32
35	35	35	35					35	35	35
B8	B8	B8	B8	B36	B81	B82	B62	B4	B4	B4
C30	C30	C30	C30	C30	C30	C30	C30	C30	C30	C30

SHELF MOUNTED

CROSSING RACK

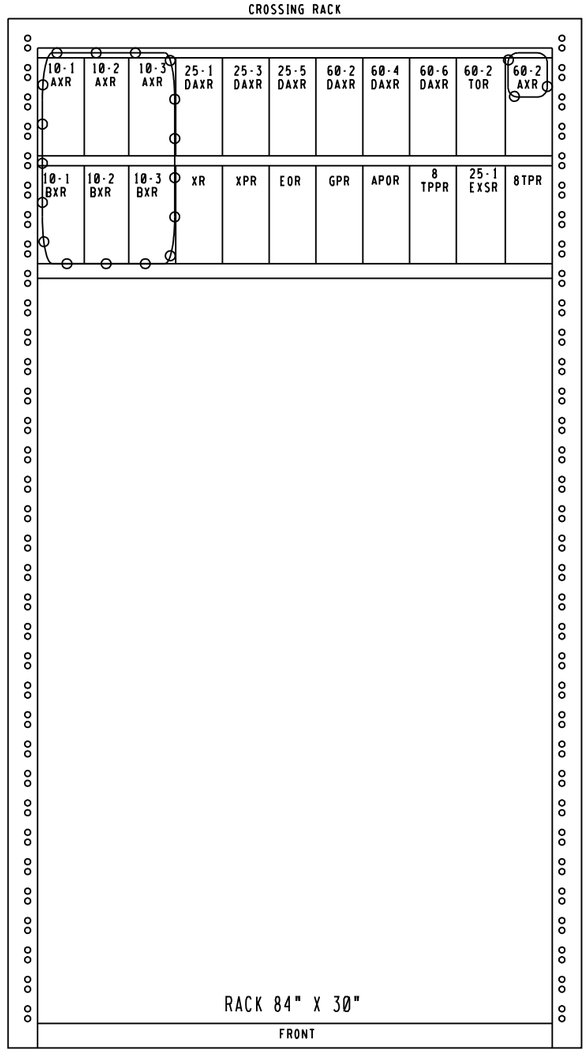

FIELD SET
03/19/13

⊖⊖⊖ = IN
⊗⊗⊗ = OUT

GE TRANSPORTATION
INTELLIGENT CONTROL SYSTEMS
Jacksonville, Florida
CSX PROJ #: IL2011037A DATE: 01-29-13
DESIGNED BY: SAT CHECKED BY: DPL

LOCATION A - 8'X 12' RELAY HOUSE

REVISIONS	
10-21-02 SWE	IL2002002
05-27-03 SWE	IL2002032

CHATHAM → WILLOW CREEK TO BLUE ISLAND JCT.

BLUE ISLAND, IL M.P. DC-14.54 → WESTERN AVE., 163 415H, MP. DC-14.60

CSX TRANSPORTATION
RAIL TRANSPORT GROUP ENGINEERING
COMMUNICATIONS AND SIGNALS

RACK 2 LAYOUT

DESIGNED	DIGITIZED	CHECKED	DATE
SWE/STL	SWE/JSH	SWE/MJH	03-22-02
NEXT FILE	NEXT SH	FILE	SHEET
DC01454	E04	DC01454	E03

REV. 08-23-01 8X8VHLC1.E02

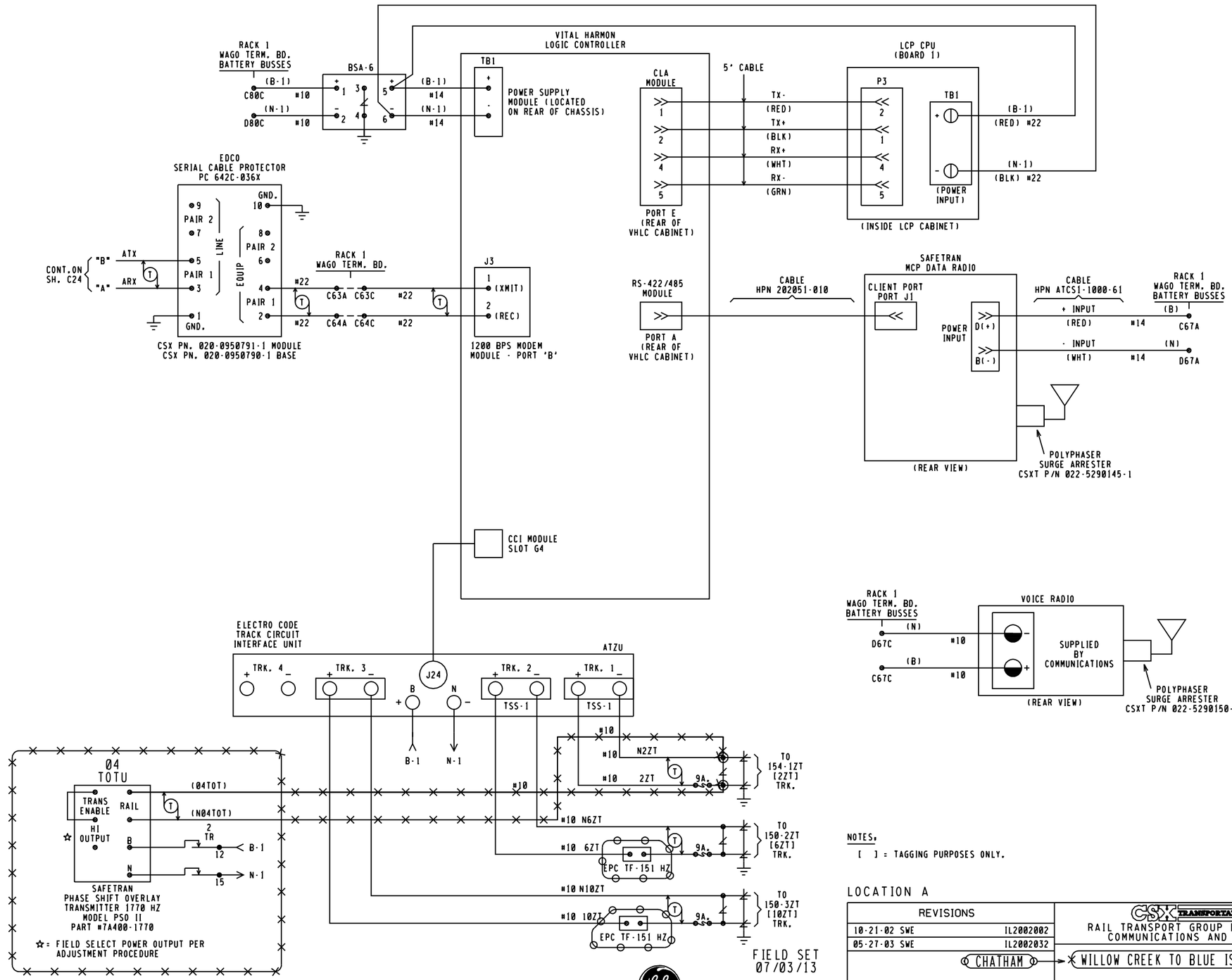

NOTES:

[ ] = TAGGING PURPOSES ONLY.

LOCATION A

REVISIONS	
10-21-02 SWE	IL2002002
05-27-03 SWE	IL2002032

CHATHAM → WILLOW CREEK TO BLUE ISLAND JCT.

BLUE ISLAND, IL M.P. DC-14.54 → VHLC CIRCUITS CHATHAM, MP. DC-14.54

CSX TRANSPORTATION
RAIL TRANSPORT GROUP ENGINEERING
COMMUNICATIONS AND SIGNALS

DESIGNED	DIGITIZED	CHECKED	DATE
SWE/STL	SWE/JSH	SWE/MJH	03-22-02
NEXT FILE	NEXT SH	FILE	SHEET
DC01454	C02	DC01454	C01

GE TRANSPORTATION
INTELLIGENT CONTROL SYSTEMS
Jacksonville, Florida
CSX PROJ #, IL2011037A DATE, 07-03-13
DESIGNED BY, SAT CHECKED BY, DPL

REV. 06-28-01 VHLC2.C01

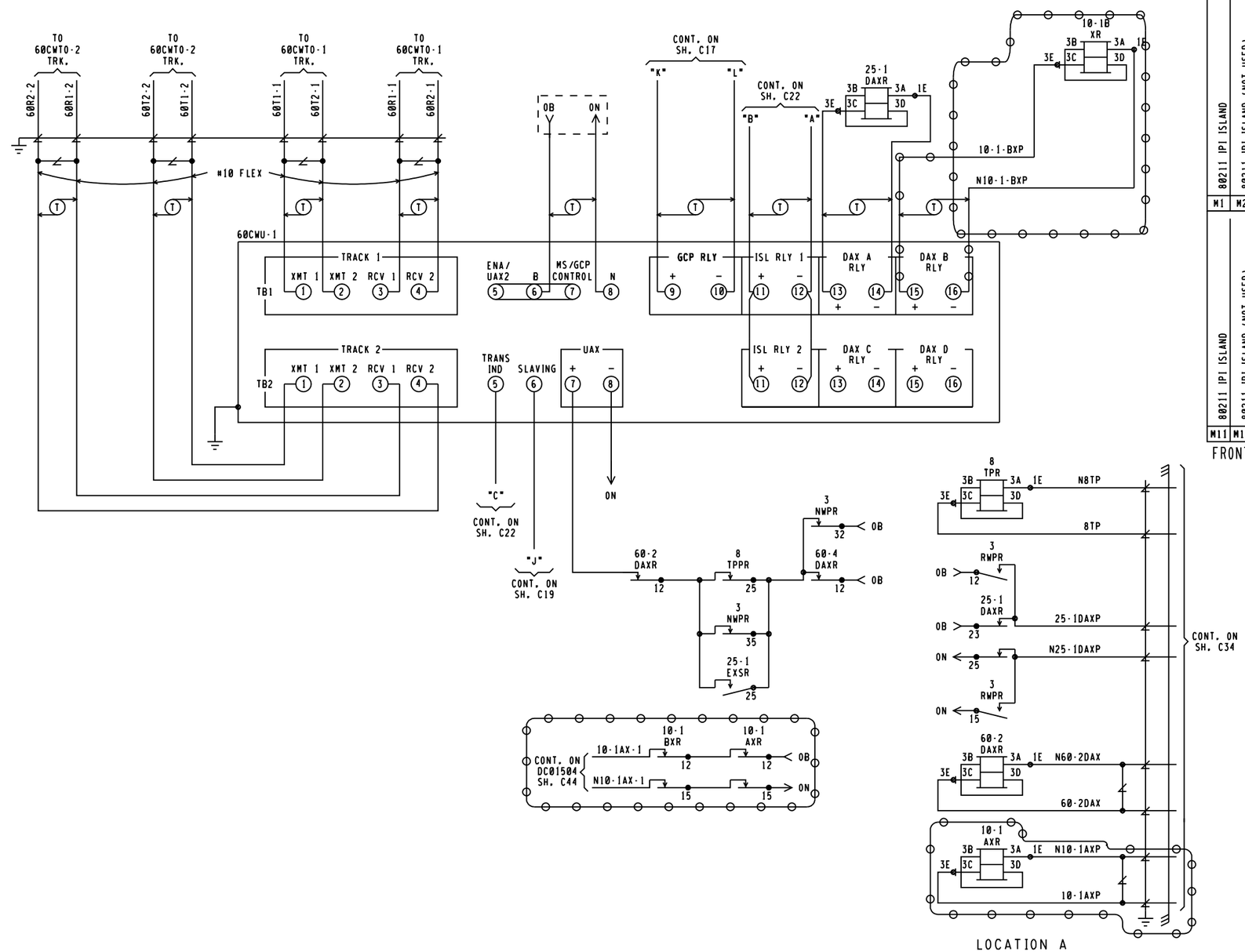

60CWU-1
3000D2 MODULES REQUIRED

M1	M2	M3	M4	M5	M6	M7	M8	M9	M10	
80211 IPI ISLAND	80211 IPI ISLAND (NOT USED)	80012 TRANSCIEVER	80012 TRANSCIEVER	80013 RELAY DRIVE	80214 PROCESSOR	80015 RECORDER (NOT USED)	80016 DAX	80016 DAX (NOT USED)	80020-1 CONTROL INTERFACE	

M11	M12	M13	M14	M15	M16	M17	M18	M19	M20	M21
80211 IPI ISLAND	80211 IPI ISLAND (NOT USED)	80012 TRANSCIEVER	80012 TRANSCIEVER	80013 RELAY DRIVE	80214 PROCESSOR	80015 RECORDER (NOT USED)	80016 DAX	80016 DAX (NOT USED)	80020-2 CONTROL INTERFACE	80028 TRANSFER TIMER

FRONT VIEW

FIELD SET
03/19/13

: IN
: OUT

GE TRANSPORTATION
INTELLIGENT CONTROL SYSTEMS
Jacksonville, Florida
CSX PROJ #: IL2011037A DATE: 01-29-13
DESIGNED BY: SAT CHECKED BY: DPL

LOCATION A

IPI
MODULE 80211

SLOT M1 & M11
15.2KHZ

PLACE SHORTING BLOCK ACROSS 15.2KHZ PIN PAIRS

MODULE 80028
S4 DIP SWITCH POSITIONS *

SWITCH #	16	8	4	2	1
SWITCH POSITION	UP	DOWN	UP	DOWN	UP

* MAY BE SET PER FIELD CONDITIONS

MODULE 80028
S1 DIP SWITCH POSITIONS

SWITCH #	A	B	C	D
DAX USED	LEFT	RIGHT	RIGHT	RIGHT

LEFT INDICATES DAX USED

LEFT

REVISIONS	
10-21-02 SWE	IL2002002
05-27-03 SWE	IL2002032

CSX TRANSPORTATION
RAIL TRANSPORT GROUP ENGINEERING
COMMUNICATIONS AND SIGNALS

CHATHAM → WILLOW CREEK TO BLUE ISLAND JCT.

CROSSING DETECTION CIRCUITRY

BLUE ISLAND, IL M.P. DC-14.54 → WESTERN AVE. 163 415H, MP. DC-14.60

DESIGNED	DIGITIZED	CHECKED	DATE
SWE/STL	SWE/JSH	SWE/MJH	03-22-02
NEXT FILE	NEXT SH	FILE	SHEET
DC01454	C16	DC01454	C15

REV: 12-18-01 3000D2.C01

3000 GCP APPLICATION DESIGN CARD

EQUIPMENT: 3000 [ ] 3000D2 [■]
3000ND [ ] 3000ND2 [ ]

ISLAND FREQUENCY: T1: 15.2 KHZ T2: N/A KHZ 60 CWU-1

SOFTWARE LEVEL (DISPLAYED DURING BOOT-UP)		☆☆
NUMBER OF TRACKS (NUMBER OF TRANSCEIVER MODULES, 1 OR 2)		1 [ ] 2 [■]
FREQUENCY (MS/GCP)	T1:	285 HZ
	T2:	285 HZ
UNIDIRECTIONAL / BIDIRECTIONAL	T1:	UNI [■] BI [ ]
	T2:	UNI [■] BI [ ]
XMIT LEVEL	T1:	HI [ ] MED [■]
	T2:	HI [ ] MED [■]
PREDICTOR/MOTION SENSOR	T1:	PRED [■] MS [ ]
	T2:	PRED [■] MS [ ]
WARNING TIME SELECTED	T1:	28 SEC.
	T2:	28 SEC.
APPROACH DISTANCE SELECTED	T1:	1434 FT.
	T2:	1248 FT.
APPROACH DISTANCE COMPUTED	T1:	NOT REQUIRED *
	T2:	NOT REQUIRED *
UAX PICKUP DELAY (UAX1) (0 = OFF)		25 SEC.
ENA/UAX2 DELAY (0 = ENA)		0 SEC.
ISLAND DISTANCE (BETWEEN FEED WIRES)	T1:	197 FT.
	T2:	0 FT.
NUMBER OF DAX'S		0 [ ] 1 [■] 2 [■] 3 [ ] 4 [ ]
DAX A TRACK ASSIGNMENT		T1 [■] T2 [ ]
DAX A DISTANCE (0 = PREEMPT)		1445 FT.
DAX A WARNING TIME		28 SEC.
DAX B TRACK ASSIGNMENT		T1 [ ] T2 [■]
DAX B DISTANCE (0 = PREEMPT)		2234 FT.
DAX B WARNING TIME		60 SEC.
DAX C TRACK ASSIGNMENT		T1 [ ] T2 [ ]
DAX C DISTANCE (0 = PREEMPT)		FT.
DAX C WARNING TIME		SEC.
DAX D TRACK ASSIGNMENT		T1 [ ] T2 [ ]
DAX D DISTANCE (0 = PREEMPT)		FT.
DAX D WARNING TIME		SEC.
SLAVING MASTER/SLAVE		MASTER [ ] SLAVE [■]
PASSWORD ENABLED		DISABLED [■] ENABLED [ ]
RECORDER INSTALLED		NOT INSTALLED [■] INSTALLED [ ]
RS-232-C BAUD RATE		BPS
RS-232-C DATE BITES		7 [ ] 8 [ ]
RS-232-C STOP BITS		1 [ ] 2 [ ]
RS-232-C PARITY		NONE [ ] MARK [ ]
		ODD [ ] SPACE [ ]
		EVEN [ ]
DATE (E.G., MON 13 MAY 1991)		NOT REQUIRED *
TIME (E.G., 06:25:43 PM)		NOT REQUIRED *
DAYLIGHT SAVINGS		ON [ ] OFF [■]

* PROGRAMMED AT INSTALLATION DURING CALIBRATION PROCEDURE
☆ = 120' MINIMUM ISLAND DISTANCE TO BE ENTERED BY FIELD PERSONNEL FOR NON-DAXING APPLICATIONS WHEN ROAD IS 20' OR LESS WIDE.
☆☆ = INDICATE ON AS-IN-SERVICE DRAWINGS

EXPANDED PROGRAMMING DESIGN

SWITCH TO MS (ENTER EZ VALUE)	T1:	10 EZ
	T2:	10 EZ
TRANSFER DELAY MS TO GCP (0 = OFF)	T1:	0 SEC.
	T2:	0 SEC.
PRIME PREDICTION OFFSET (0 = OFF)	T1:	0 FT.
	T2:	0 FT.
PICKUP DELAY PRIME		15 SEC.
PICKUP DELAY DAX A		15 SEC.
PICKUP DELAY DAX B		15 0 SEC.
PICKUP DELAY DAX C		0 SEC.
PICKUP DELAY DAX D		0 SEC.
COMPENSATION VALUE	T1:	NOT REQUIRED **
COMPENSATION VALUE	T2:	NOT REQUIRED **
ENHANCED DETECTION (ED)	T1:	ON [ ] OFF [■]
	T2:	ON [ ] OFF [■]
BACK TO BACK T1 AND T2 (WHEN ED IS ON)		NO [■] YES [ ]
STATION STOP TIMER (WHEN ED IS ON)	T1:	10 SEC.
	T2:	10 SEC.
# OF TRACK WIRES - 4 OR 6	T1:	4 [■] 6 [ ]
	T2:	4 [■] 6 [ ]
LOW EX ADJUSTMENT	T1:	0
	T2:	0
LOW EZ DETECTION	T1:	ON [ ] OFF [■]
	T2:	ON [ ] OFF [■]
LOW EZ DETECTION TIMER	T1:	10 MIN.
	T2:	10 MIN.
POSITIVE START (0 = OFF) (ENTER EZ VALUE)	T1:	0 EZ
	T2:	0 EZ
POSITIVE START TIMEOUT (0 = NONE) (WHEN POTISIVE START IS ON)	T1:	0 MIN.
	T2:	0 MIN.
SET AT OPERATION		NORMAL [■] DIAGNOSTIC [ ]
DIAGNOSTIC MESSAGES		ON [ ] OFF [■]
DAX MESSAGES		ON [ ] OFF [■]
ADVANCE PREEMP TIMER (0 = OFF)		0 SEC.

** THE COMPENSATION VALUE IS PROVIDED BY THE 3000 GCP SYSTEM AND NO ADDITIONAL PROGRAMMING IS NORMALLY REQUIRED.

APPROACH LENGTHS TABLE	WESTWARD TRACK 1 CWT	EASTWARD TRACK 1 CWT	WESTWARD TRACK 2 CWT	EASTWARD TRACK 2 CWT	WESTWARD TRACK 3 CWT	EASTWARD TRACK 3 CWT
DC, AFO, TYPE C, MOTION, CWT, OR OTHER	20	20	20	20	20	20
STANDARD MINIMUM WARNING TIME	5	5	5	5	5	5
ROADWAY GATE TIME	3	3	3	3	3	3
CLEARANCE TIME	0	0	0	0	0	0
DOT TRAFFIC LIGHT SIMULTANEOUS PREEMPT TIME ✳ DESIGNED WARNING TIME FOR TRAINS AT TIME TABLE SPEED	28	28	28	28	28	28
DOT TRAFFIC LIGHT ADVANCE PREEMPT TIME ✳	0	0	0	0	0	0
CONTROL EQUIPMENT DECISION TIME	4	4	4	4	4	4
DESIGNED DETECTION TIME FOR TRAINS AT TIME TABLE SPEED	32	32	32	32	32	32
TIME TABLE MAXIMUM TRAIN SPEED IN MILES PER HOUR	30	30	30	30	30	30
BUFFER SPEED IN MILES PER HOUR	5	5	5	5	5	5
TOTAL WARNING SYSTEM DESIGN SPEED	35	35	35	35	35	35
APPROACH DISTANCE TO ISLAND EDGE IN FEET	1592'	1434'	1592'	1434'	1592'	1434'
HALF WIDTH OF ISLAND IN FEET	50 + 86	50 + 86	50 + 86	50 + 86	50 + 86	50 + 86
APPROXIMATE MILE POSTS FOR APPROACH CIRCUIT	14.28^2	14.97^2	14.28^2	14.97^2	14.28^2	14.97^2

✳ AUTHORIZING AGENCY, NONE
✳ DATE OF REQUIREMENT, NONE
✳ AMOUNT OF TIME (SEC.), NONE

FIELD SET
03/19/13
⊖⊖⊖ : IN
✕✕✕ : OUT

GE TRANSPORTATION
INTELLIGENT CONTROL SYSTEMS
Jacksonville, Florida
CSX PROJ #, IL2011037A DATE, 01-29-13
DESIGNED BY, SAT CHECKED BY, DPL

LOCATION A

REVISIONS	
10-21-02 SWE	IL2002002

CSX TRANSPORTATION
RAIL TRANSPORT GROUP ENGINEERING
COMMUNICATIONS AND SIGNALS

CHATHAM → WILLOW CREEK TO BLUE ISLAND JCT.

DETECTION DEVICE PROGRAM

BLUE ISLAND, IL M.P. DC-14.54 → WESTERN AVE., 163 415H, MP. DC-14.60

DESIGNED	DIGITIZED	CHECKED	DATE
SWE/STL	SWE/JSH	SWE/MJH	03-22-02

NEXT FILE	NEXT SH	FILE	SHEET
DC01454	C17	DC01454	C16

REV, 06-05-01 3000D2.C02

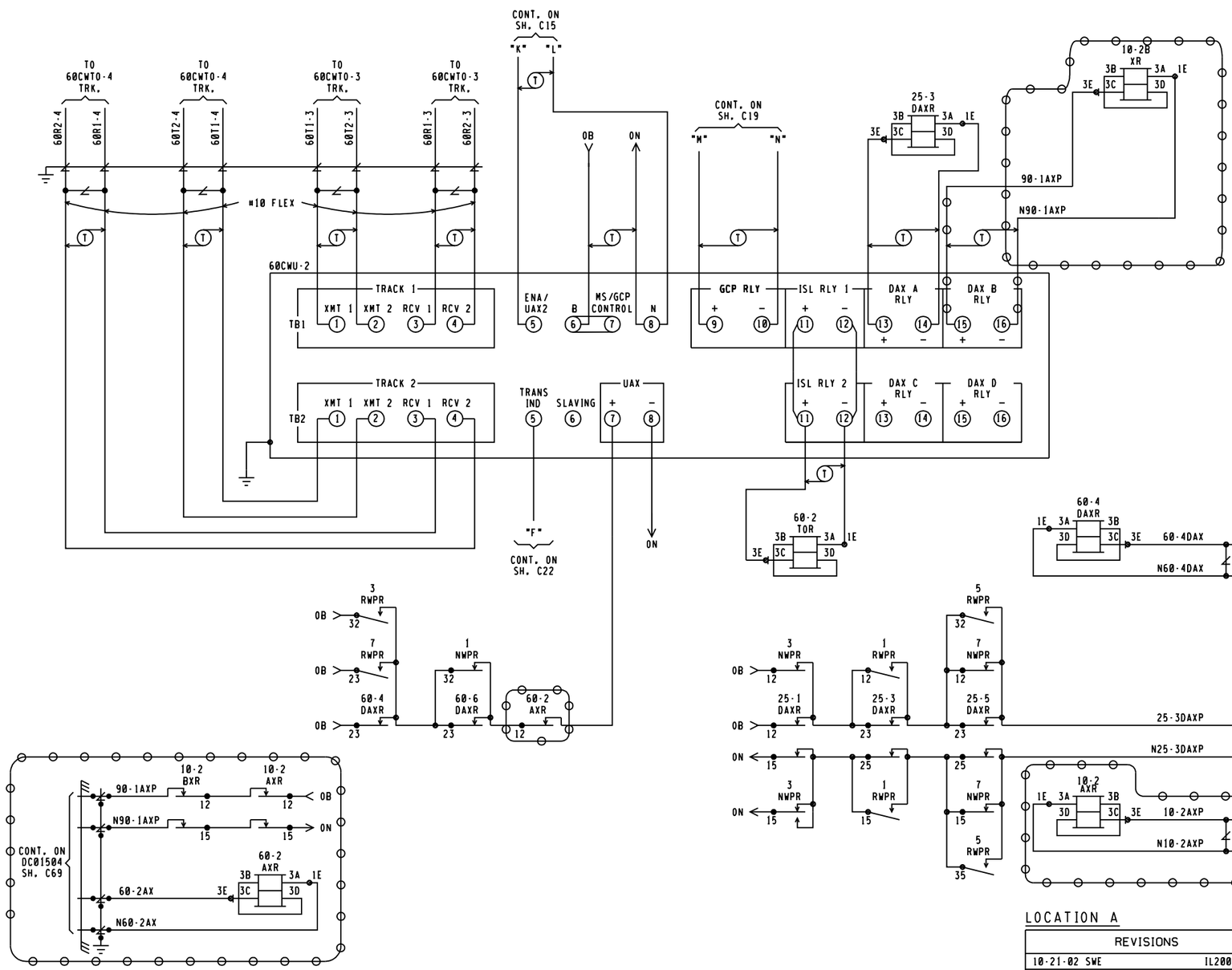

60CWU-2
3000D2 MODULES REQUIRED

M1	M2	M3	M4	M5	M6	M7	M8	M9	M10
80211 IPI ISLAND	80211 IPI ISLAND (NOT USED)	80012 TRANSCIEVER	80012 TRANSCIEVER	80013 RELAY DRIVE	80214 PROCESSOR	80015 RECORDER (NOT USED)	80016 DAX	80016 DAX (NOT USED)	80020-1 CONTROL INTERFACE

M11	M12	M13	M14	M15	M16	M17	M18	M19	M20	M21
80211 IPI ISLAND	80211 IPI ISLAND (NOT USED)	80012 TRANSCIEVER	80012 TRANSCIEVER	80013 RELAY DRIVE	80214 PROCESSOR	80015 RECORDER (NOT USED)	80016 DAX	80016 DAX (NOT USED)	80020-4 CONTROL INTERFACE	80020 TRANSFER TIMER

FRONT VIEW

IPI
MODULE 80211

SLOT M1 & M11
13.2KHZ

PLACE SHORTING BLOCK ACROSS 13.2KHZ PIN PAIRS

MODULE 80028
S4 DIP SWITCH POSITIONS *

SWITCH #	16	8	4	2	1
SWITCH POSITION	UP	DOWN	UP	DOWN	UP

* MAY BE SET PER FIELD CONDITIONS

MODULE 80028
S1 DIP SWITCH POSITIONS

SWITCH #	A	B	C	D
DAX USED	LEFT	RIGHT	RIGHT	RIGHT

LEFT INDICATES DAX USED

LEFT

FIELD SET
03/19/13

= IN
= OUT

GE TRANSPORTATION
INTELLIGENT CONTROL SYSTEMS
Jacksonville, Florida
CSX PROJ #: IL2011037A DATE: 01-29-13
DESIGNED BY: SAT CHECKED BY: DPL

LOCATION A

REVISIONS	
10-21-02 SWE	IL2002002
05-27-03 SWE	IL2002032

CSX TRANSPORTATION
RAIL TRANSPORT GROUP ENGINEERING
COMMUNICATIONS AND SIGNALS

CHATHAM → WILLOW CREEK TO BLUE ISLAND JCT.

CROSSING DETECTION CIRCUITRY

BLUE ISLAND, IL M.P. DC-14.54 → WESTERN AVE., 163 415H, MP. DC-14.60

DESIGNED	DIGITIZED	CHECKED	DATE
SWE/STL	SWE/JSH	SWE/MJH	03-22-02

NEXT FILE	NEXT SH	FILE	SHEET
DC01454	C18	DC01454	C17

REV: 12-18-01 3000D2.C01

3000 GCP APPLICATION DESIGN CARD

EQUIPMENT: 3000 [ ] 3000D2 [■] 3000ND [ ] 3000ND2 [ ]

ISLAND FREQUENCY: T1: 13.2 KHZ T2: N/A KHZ 60 CWU-2

SOFTWARE LEVEL (DISPLAYED DURING BOOT-UP)		☆☆	
NUMBER OF TRACKS (NUMBER OF TRANSCEIVER MODULES, 1 OR 2)		1 [ ]	2 [■]
FREQUENCY (MS/GCP)	T1:	348 HZ	
	T2:	348 HZ	
UNIDIRECTIONAL / BIDIRECTIONAL	T1:	UNI [■]	BI [ ]
	T2:	UNI [■]	BI [ ]
XMIT LEVEL	T1:	HI [ ]	MED [■]
	T2:	HI [ ]	MED [■]
PREDICTOR/MOTION SENSOR	T1:	PRED [■]	MS [ ]
	T2:	PRED [■]	MS [ ]
WARNING TIME SELECTED	T1:	28 SEC.	
	T2:	28 SEC.	
APPROACH DISTANCE SELECTED	T1:	1434 FT.	
	T2:	1248 FT.	
APPROACH DISTANCE COMPUTED	T1:	NOT REQUIRED *	
	T2:	NOT REQUIRED *	
UAX PICKUP DELAY (UAX1) (0 = OFF)		25 SEC.	
ENA/UAX2 DELAY (0 = ENA)		0 SEC.	
ISLAND DISTANCE (BETWEEN FEED WIRES)	T1:	197 FT.	
	T2:	0 FT.	
NUMBER OF DAX'S		0 [ ] 1 [■] 2 [■] 3 [ ] 4 [ ]	
DAX A TRACK ASSIGNMENT		T1 [■]	T2 [ ]
DAX A DISTANCE (0 = PREEMPT)		1445 FT.	
DAX A WARNING TIME		28 SEC.	
DAX B TRACK ASSIGNMENT		T1 [ ]	T2 [■]
DAX B DISTANCE (0 = PREEMPT)		2234 FT.	
DAX B WARNING TIME		60 SEC.	
DAX C TRACK ASSIGNMENT		T1 [ ]	T2 [ ]
DAX C DISTANCE (0 = PREEMPT)		FT.	
DAX C WARNING TIME		SEC.	
DAX D TRACK ASSIGNMENT		T1 [ ]	T2 [ ]
DAX D DISTANCE (0 = PREEMPT)		FT.	
DAX D WARNING TIME		SEC.	
SLAVING MASTER/SLAVE		MASTER [■]	SLAVE [ ]
PASSWORD ENABLED		DISABLED [■]	ENABLED [ ]
RECORDER INSTALLED		NOT INSTALLED [■]	INSTALLED [ ]
RS-232-C BAUD RATE		BPS	
RS-232-C DATE BITES		7 [ ]	8 [ ]
RS-232-C STOP BITS		1 [ ]	2 [ ]
RS-232-C PARITY		NONE [ ]	MARK [ ]
		ODD [ ]	SPACE [ ]
		EVEN [ ]	
DATE (E.G., MON 13 MAY 1991)		NOT REQUIRED *	
TIME (E.G., 06:25:43 PM)		NOT REQUIRED *	
DAYLIGHT SAVINGS		ON [ ]	OFF [■]

* PROGRAMMED AT INSTALLATION DURING CALIBRATION PROCEDURE
☆ = 120' MINIMUM ISLAND DISTANCE TO BE ENTERED BY FIELD PERSONNEL FOR NON-DAXING APPLICATIONS WHEN ROAD IS 20' OR LESS WIDE.
☆☆ = INDICATE ON AS-IN-SERVICE DRAWINGS

EXPANDED PROGRAMMING DESIGN

SWITCH TO MS (ENTER EZ VALUE)	T1:	10 EZ	
	T2:	10 EZ	
TRANSFER DELAY MS TO GCP (0 = OFF)	T1:	0 SEC.	
	T2:	0 SEC.	
PRIME PREDICTION OFFSET (0 = OFF)	T1:	0 FT.	
	T2:	0 FT.	
PICKUP DELAY PRIME		15 SEC.	
PICKUP DELAY DAX A		15 SEC.	
PICKUP DELAY DAX B		15 0 SEC.	
PICKUP DELAY DAX C		0 SEC.	
PICKUP DELAY DAX D		0 SEC.	
COMPENSATION VALUE	T1:	NOT REQUIRED **	
COMPENSATION VALUE	T2:	NOT REQUIRED **	
ENHANCED DETECTION (ED)	T1:	ON [ ]	OFF [■]
	T2:	ON [ ]	OFF [■]
BACK TO BACK T1 AND T2 (WHEN ED IS ON)		NO [■]	YES [ ]
STATION STOP TIMER (WHEN ED IS ON)	T1:	10 SEC.	
	T2:	10 SEC.	
# OF TRACK WIRES - 4 OR 6	T1:	4 [■]	6 [ ]
	T2:	4 [■]	6 [ ]
LOW EX ADJUSTMENT	T1:	0	
	T2:	0	
LOW EZ DETECTION	T1:	ON [ ]	OFF [■]
	T2:	ON [ ]	OFF [■]
LOW EZ DETECTION TIMER	T1:	10 MIN.	
	T2:	10 MIN.	
POSITIVE START (0 = OFF) (ENTER EZ VALUE)	T1:	0 EZ	
	T2:	0 EZ	
POSITIVE START TIMEOUT (0 = NONE) (WHEN POTISIVE START IS ON)	T1:	0 MIN.	
	T2:	0 MIN.	
SET AT OPERATION		NORMAL [■]	DIAGNOSTIC [ ]
DIAGNOSTIC MESSAGES		ON [ ]	OFF [■]
DAX MESSAGES		ON [ ]	OFF [■]
ADVANCE PREEMP TIMER (0 = OFF)		0 SEC.	

** THE COMPENSATION VALUE IS PROVIDED BY THE 3000 GCP SYSTEM AND NO ADDITIONAL PROGRAMMING IS NORMALLY REQUIRED.

FIELD SET
03/19/13

⊖⊖⊖ = IN
⊗⊗⊗ = OUT

GE TRANSPORTATION
INTELLIGENT CONTROL SYSTEMS
Jacksonville, Florida
CSX PROJ #, IL2011037A DATE, 01-29-13
DESIGNED BY, SAT CHECKED BY, DPL

LOCATION A

REVISIONS	
10-21-02 SWE	IL2002002

CSX TRANSPORTATION
RAIL TRANSPORT GROUP ENGINEERING
COMMUNICATIONS AND SIGNALS

CHATHAM → WILLOW CREEK TO BLUE ISLAND JCT.

DETECTION DEVICE PROGRAM

BLUE ISLAND, IL M.P. DC-14.54 → WESTERN AVE., 163 415H, MP. DC-14.60

DESIGNED	DIGITIZED	CHECKED	DATE
SWE/STL	SWE/JSH	SWE/MJH	03-22-02

NEXT FILE	NEXT SH	FILE	SHEET
DC01454	C19	DC01454	C18

REV, 06-05-01 3000D2.C02

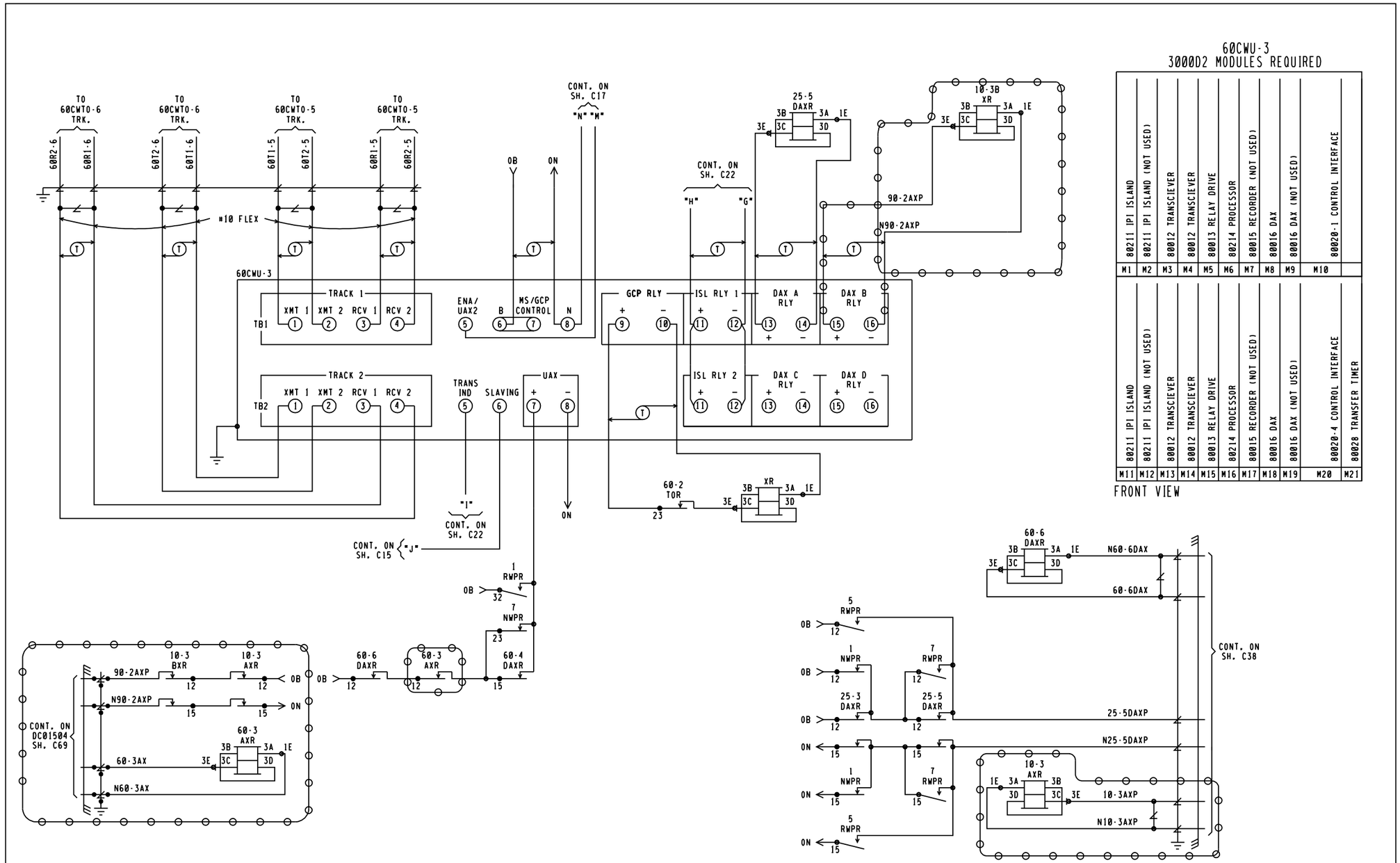

60CWU-3
3000D2 MODULES REQUIRED

M1	M2	M3	M4	M5	M6	M7	M8	M9	M10
80211 IPI ISLAND	80211 IPI ISLAND (NOT USED)	80012 TRANSCIEVER	80012 TRANSCIEVER	80013 RELAY DRIVE	80214 PROCESSOR	80015 RECORDER (NOT USED)	80016 DAX	80016 DAX (NOT USED)	80020-1 CONTROL INTERFACE

M11	M12	M13	M14	M15	M16	M17	M18	M19	M20	M21
80211 IPI ISLAND	80211 IPI ISLAND (NOT USED)	80012 TRANSCIEVER	80012 TRANSCIEVER	80013 RELAY DRIVE	80214 PROCESSOR	80015 RECORDER (NOT USED)	80016 DAX	80016 DAX (NOT USED)	80020-4 CONTROL INTERFACE	80028 TRANSFER TIMER

FRONT VIEW

IPI
MODULE 80211

SLOT M1 & M11
10.0KHZ

PLACE SHORTING BLOCK ACROSS 10.0KHZ PIN PAIRS

MODULE 80028
S4 DIP SWITCH POSITIONS *

SWITCH #	16	8	4	2	1
SWITCH POSITION	UP	DOWN	UP	DOWN	UP

* MAY BE SET PER FIELD CONDITIONS

MODULE 80028
S1 DIP SWITCH POSITIONS

SWITCH #	A	B	C	D
DAX USED	LEFT	RIGHT	RIGHT	RIGHT

LEFT INDICATES DAX USED

LEFT

FIELD SET
03/19/13

= IN
= OUT

GE TRANSPORTATION
INTELLIGENT CONTROL SYSTEMS
Jacksonville, Florida
CSX PROJ #, IL2011037A DATE, 01-29-13
DESIGNED BY, SAT CHECKED BY, DPL

LOCATION A

REVISIONS	
10-21-02 SWE	IL2002002
05-27-03 SWE	IL2002032

CHATHAM → WILLOW CREEK TO BLUE ISLAND JCT.

BLUE ISLAND, IL M.P. DC-14.54 → WESTERN AVE., I63 415H, MP. DC-14.60

CSX TRANSPORTATION
RAIL TRANSPORT GROUP ENGINEERING
COMMUNICATIONS AND SIGNALS

CROSSING DETECTION CIRCUITRY

DESIGNED	DIGITIZED	CHECKED	DATE
SWE/STL	SWE/JSH	SWE/MJH	03-22-02

NEXT FILE	NEXT SH	FILE	SHEET
DC01454	C20	DC01454	C19

REV, 12-18-01 3000D2.C01

3000 GCP APPLICATION DESIGN CARD

EQUIPMENT: 3000 [ ] 3000D2 [■]
3000ND [ ] 3000ND2 [ ]

ISLAND FREQUENCY: T1: 10.0 KHZ T2: N/A KHZ 60 CWU-3

SOFTWARE LEVEL (DISPLAYED DURING BOOT-UP)		☆☆	
NUMBER OF TRACKS (NUMBER OF TRANSCEIVER MODULES, 1 OR 2)		1 [ ]	2 [■]
FREQUENCY (MS/GCP)	T1:	285 HZ	
	T2:	285 HZ	
UNIDIRECTIONAL / BIDIRECTIONAL	T1:	UNI [■]	BI [ ]
	T2:	UNI [■]	BI [ ]
XMIT LEVEL	T1:	HI [ ]	MED [■]
	T2:	HI [ ]	MED [■]
PREDICTOR/MOTION SENSOR	T1:	PRED [■]	MS [ ]
	T2:	PRED [■]	MS [ ]
WARNING TIME SELECTED	T1:	28 SEC.	
	T2:	28 SEC.	
APPROACH DISTANCE SELECTED	T1:	1454 FT.	
	T2:	1248 FT.	
APPROACH DISTANCE COMPUTED	T1:	NOT REQUIRED *	
	T2:	NOT REQUIRED *	
UAX PICKUP DELAY (UAX1) (0 = OFF)		25 SEC.	
ENA/UAX2 DELAY (0 = ENA)		0 SEC.	
ISLAND DISTANCE (BETWEEN FEED WIRES)	T1:	197 FT.	
	T2:	0 FT.	
NUMBER OF DAX'S		0 [ ] 1 [■] 2 [■] 3 [ ] 4 [ ]	
DAX A TRACK ASSIGNMENT		T1 [■]	T2 [ ]
DAX A DISTANCE (0 = PREEMPT)		1445 FT.	
DAX A WARNING TIME		28 SEC.	
DAX B TRACK ASSIGNMENT		T1 [ ]	T2 [■]
DAX B DISTANCE (0 = PREEMPT)		2234 FT.	
DAX B WARNING TIME		60 SEC.	
DAX C TRACK ASSIGNMENT		T1 [ ]	T2 [ ]
DAX C DISTANCE (0 = PREEMPT)		FT.	
DAX C WARNING TIME		SEC.	
DAX D TRACK ASSIGNMENT		T1 [ ]	T2 [ ]
DAX D DISTANCE (0 = PREEMPT)		FT.	
DAX D WARNING TIME		SEC.	
SLAVING MASTER/SLAVE		MASTER [■]	SLAVE [ ]
PASSWORD ENABLED		DISABLED [■]	ENABLED [ ]
RECORDER INSTALLED		NOT INSTALLED [■]	INSTALLED [ ]
RS-232-C BAUD RATE		BPS	
RS-232-C DATE BITES		7 [ ]	8 [ ]
RS-232-C STOP BITS		1 [ ]	2 [ ]
RS-232-C PARITY		NONE [ ]	MARK [ ]
		ODD [ ]	SPACE [ ]
		EVEN [ ]	
DATE (E.G., MON 13 MAY 1991)		NOT REQUIRED *	
TIME (E.G., 06:25:43 PM)		NOT REQUIRED *	
DAYLIGHT SAVINGS		ON [ ]	OFF [■]

* PROGRAMMED AT INSTALLATION DURING CALIBRATION PROCEDURE
☆ = 120' MINIMUM ISLAND DISTANCE TO BE ENTERED BY FIELD PERSONNEL FOR NON-DAXING APPLICATIONS WHEN ROAD IS 20' OR LESS WIDE.
☆☆ = INDICATE ON AS-IN-SERVICE DRAWINGS

EXPANDED PROGRAMMING DESIGN

SWITCH TO MS (ENTER EZ VALUE)	T1:	10 EZ	
	T2:	10 EZ	
TRANSFER DELAY MS TO GCP (0 = OFF)	T1:	0 SEC.	
	T2:	0 SEC.	
PRIME PREDICTION OFFSET (0 = OFF)	T1:	0 FT.	
	T2:	0 FT.	
PICKUP DELAY PRIME		15 SEC.	
PICKUP DELAY DAX A		15 SEC.	
PICKUP DELAY DAX B		15 ~~0~~ SEC.	
PICKUP DELAY DAX C		0 SEC.	
PICKUP DELAY DAX D		0 SEC.	
COMPENSATION VALUE	T1:	NOT REQUIRED **	
COMPENSATION VALUE	T2:	NOT REQUIRED **	
ENHANCED DETECTION (ED)	T1:	ON [ ]	OFF [■]
	T2:	ON [ ]	OFF [■]
BACK TO BACK T1 AND T2 (WHEN ED IS ON)		NO [■]	YES [ ]
STATION STOP TIMER (WHEN ED IS ON)	T1:	10 SEC.	
	T2:	10 SEC.	
# OF TRACK WIRES - 4 OR 6	T1:	4 [■]	6 [ ]
	T2:	4 [■]	6 [ ]
LOW EX ADJUSTMENT	T1:	0	
	T2:	0	
LOW EZ DETECTION	T1:	ON [ ]	OFF [■]
	T2:	ON [ ]	OFF [■]
LOW EZ DETECTION TIMER	T1:	10 MIN.	
	T2:	10 MIN.	
POSITIVE START (0 = OFF) (ENTER EZ VALUE)	T1:	0 EZ	
	T2:	0 EZ	
POSITIVE START TIMEOUT (0 = NONE) (WHEN POTISIVE START IS ON)	T1:	0 MIN.	
	T2:	0 MIN.	
SET AT OPERATION		NORMAL [■]	DIAGNOSTIC [ ]
DIAGNOSTIC MESSAGES		ON [ ]	OFF [■]
DAX MESSAGES		ON [ ]	OFF [■]
ADVANCE PREEMP TIMER (0 = OFF)		0 SEC.	

** THE COMPENSATION VALUE IS PROVIDED BY THE 3000 GCP SYSTEM AND NO ADDITIONAL PROGRAMMING IS NORMALLY REQUIRED.

FIELD SET
03/19/13
~~O~~ : IN
~~X~~ : OUT

GE TRANSPORTATION
INTELLIGENT CONTROL SYSTEMS
Jacksonville, Florida
CSX PROJ #, IL2011037A DATE, 01-29-13
DESIGNED BY, SAT CHECKED BY, DPL

LOCATION A

REVISIONS	
10-21-02 SWE	IL2002002
05-27-03 SWE	IL2002032

CSX TRANSPORTATION
RAIL TRANSPORT GROUP ENGINEERING
COMMUNICATIONS AND SIGNALS

CHATHAM → WILLOW CREEK TO BLUE ISLAND JCT.

DETECTION DEVICE PROGRAM

BLUE ISLAND, IL M.P. DC-14.54 → WESTERN AVE., 163 415H, MP. DC-14.60

DESIGNED	DIGITIZED	CHECKED	DATE
SWE/STL	SWE/JSH	SWE/MJH	03-22-02

NEXT FILE	NEXT SH	FILE	SHEET
DC01454	C21	DC01454	C20

REV, 06-05-01 3000D2.C02

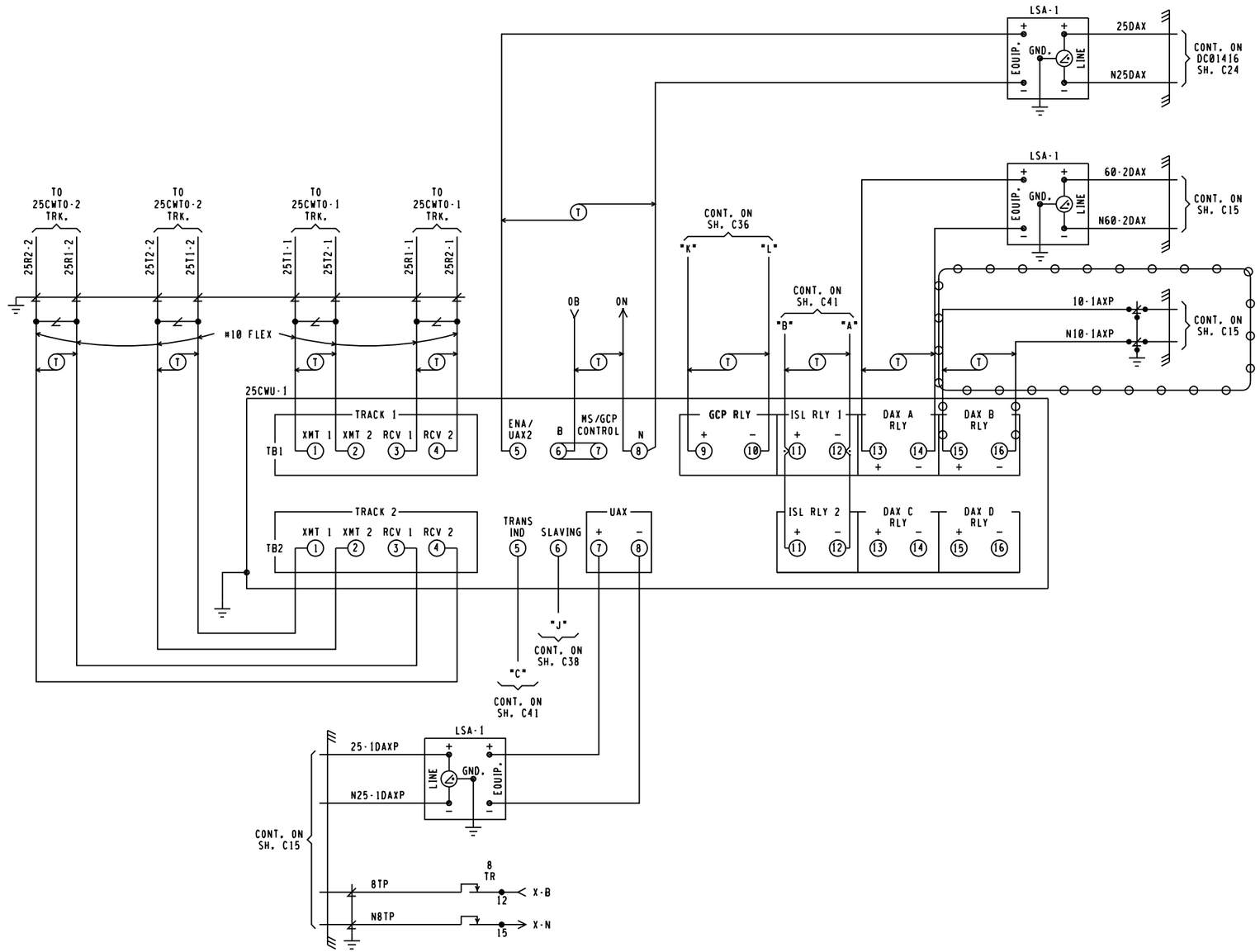

25CWU-1
3000D2 MODULES REQUIRED

M1	M2	M3	M4	M5	M6	M7	M8	M9	M10	
80211 IPI ISLAND (NOT USED)	80211 IPI ISLAND	80012 TRANSCIEVER	80012 TRANSCIEVER	80013 RELAY DRIVE	80214 PROCESSOR	80015 RECORDER (NOT USED)	80016 DAX	80016 DAX (NOT USED)	80020-1 CONTROL INTERFACE	

M11	M12	M13	M14	M15	M16	M17	M18	M19	M20	M21
80211 IPI ISLAND (NOT USED)	80211 IPI ISLAND	80012 TRANSCIEVER	80012 TRANSCIEVER	80013 RELAY DRIVE	80214 PROCESSOR	80015 RECORDER (NOT USED)	80016 DAX	80016 DAX (NOT USED)	80020-2 CONTROL INTERFACE	80028 TRANSFER TIMER

FRONT VIEW

IPI
MODULE 80211

SLOT M2 & M12
10.0KHZ

PLACE SHORTING BLOCK ACROSS 10.0KHZ PIN PAIRS

MODULE 80028
S4 DIP SWITCH POSITIONS *

SWITCH #	16	8	4	2	1
SWITCH POSITION	UP	DOWN	UP	DOWN	UP

* MAY BE SET PER FIELD CONDITIONS

MODULE 80028
S1 DIP SWITCH POSITIONS

SWITCH #	A	B	C	D
DAX USED	LEFT	RIGHT	RIGHT	RIGHT

LEFT INDICATES DAX USED

LEFT

FIELD SET
03/19/13

= IN
= OUT

GE TRANSPORTATION
INTELLIGENT CONTROL SYSTEMS
Jacksonville, Florida
CSX PROJ #, IL2011037A DATE, 01-29-13
DESIGNED BY, SAT CHECKED BY, DPL

LOCATION B

REVISIONS	
10-21-02 SWE	IL2002002
05-27-03 SWE	IL2002032

CSX TRANSPORTATION
RAIL TRANSPORT GROUP ENGINEERING
COMMUNICATIONS AND SIGNALS

CHATHAM → WILLOW CREEK TO BLUE ISLAND JCT.

CROSSING DETECTION CIRCUITRY

BLUE ISLAND, IL M.P. DC-14.54 → CHATHAM AVE., 163 413U, MP. DC-14.25

DESIGNED	DIGITIZED	CHECKED	DATE
SWE/STL	SWE/JSH	SWE/MJH	03-22-02

NEXT FILE	NEXT SH	FILE	SHEET
DC01454	C35	DC01454	C34

REV, 12-18-01 3000D2.C01

APPROACH LENGTHS TABLE	WESTWARD TRACK 1 CWT	EASTWARD TRACK 1 CWT	WESTWARD TRACK 2 CWT	EASTWARD TRACK 2 CWT	WESTWARD TRACK 3 CWT	EASTWARD TRACK 3 CWT
DC, AFO, TYPE C, MOTION, CWT, OR OTHER						
STANDARD MINIMUM WARNING TIME	20	20	20	20	20	20
ROADWAY GATE TIME	5	5	5	5	5	5
CLEARANCE TIME	3	3	3	3	3	3
DOT TRAFFIC LIGHT SIMULTANEOUS PREEMPT TIME ✳	0	0	0	0	0	0
DESIGNED WARNING TIME FOR TRAINS AT TIME TABLE SPEED	28	28	28	28	28	28
DOT TRAFFIC LIGHT ADVANCE PREEMPT TIME ✳	0	0	0	0	0	0
CONTROL EQUIPMENT DECISION TIME	4	4	4	4	4	4
DESIGNED DETECTION TIME FOR TRAINS AT TIME TABLE SPEED	32	32	32	32	32	32
TIME TABLE MAXIMUM TRAIN SPEED IN MILES PER HOUR	30	30	30	30	30	30
BUFFER SPEED IN MILES PER HOUR	5	5	5	5	5	5
TOTAL WARNING SYSTEM DESIGN SPEED	35	35	35	35	35	35
APPROACH DISTANCE TO ISLAND EDGE IN FEET	1592	1592	1592	1592	1592	1592
HALF WIDTH OF ISLAND IN FEET	50	50	50	50	50	50
APPROXIMATE MILE POSTS FOR APPROACH CIRCUIT	13.93	14.57	13.92	14.57	13.92	14.57

✳ AUTHORIZING AGENCY, NONE
✳ DATE OF REQUIREMENT, NONE
✳ AMOUNT OF TIME (SEC.), NONE

3000 GCP APPLICATION DESIGN CARD

EQUIPMENT: 3000 ☐ 3000D2 ■ 3000ND ☐ 3000ND2 ☐

ISLAND FREQUENCY: T1: N/A KHZ T2: 10.0 KHZ 25 CWU-1

SOFTWARE LEVEL (DISPLAYED DURING BOOT-UP)	☆☆	
NUMBER OF TRACKS (NUMBER OF TRANSCEIVER MODULES, 1 OR 2)	1 ☐	2 ■
FREQUENCY (MS/GCP) T1:	430 HZ	
T2:	430 HZ	
UNIDIRECTIONAL / BIDIRECTIONAL T1:	UNI ■	BI ☐
T2:	UNI ■	BI ☐
XMIT LEVEL T1:	HI ☐	MED ■
T2:	HI ☐	MED ■
PREDICTOR/MOTION SENSOR T1:	PRED ■	MS ☐
T2:	PRED ■	MS ☐
WARNING TIME SELECTED T1:	28 SEC.	
T2:	28 SEC.	
APPROACH DISTANCE SELECTED T1:	1248 FT.	
T2:	800 FT.	
APPROACH DISTANCE COMPUTED T1:	NOT REQUIRED *	
T2:	NOT REQUIRED *	
UAX PICKUP DELAY (UAX1) (0 = OFF)	25 SEC.	
ENA/UAX2 DELAY (0 = ENA)	25 SEC.	
ISLAND DISTANCE (BETWEEN FEED WIRES) T1:	0 FT.	
T2:	159 FT.	
NUMBER OF DAX'S	0 ☐ 1 ■ 2 ■ 3 ☐ 4 ☐	
DAX A TRACK ASSIGNMENT	T1 ☐	T2 ■
DAX A DISTANCE (0 = PREEMPT)	1407 FT.	
DAX A WARNING TIME	28 SEC.	
DAX B TRACK ASSIGNMENT	T1 ☐	T2 ■
DAX B DISTANCE (0 = PREEMPT)	3482 FT.	
DAX B WARNING TIME	60 SEC.	
DAX C TRACK ASSIGNMENT	T1 ☐	T2 ☐
DAX C DISTANCE (0 = PREEMPT)	FT.	
DAX C WARNING TIME	SEC.	
DAX D TRACK ASSIGNMENT	T1 ☐	T2 ☐
DAX D DISTANCE (0 = PREEMPT)	FT.	
DAX D WARNING TIME	SEC.	
SLAVING MASTER/SLAVE	MASTER ☐	SLAVE ■
PASSWORD ENABLED	DISABLED ■	ENABLED ☐
RECORDER INSTALLED	NOT INSTALLED ■	INSTALLED ☐
RS-232-C BAUD RATE	BPS	
RS-232-C DATE BITES	7 ☐	8 ☐
RS-232-C STOP BITS	1 ☐	2 ☐
RS-232-C PARITY	NONE ☐	MARK ☐
	ODD ☐	SPACE ☐
	EVEN ☐	
DATE (E.G., MON 13 MAY 1991)	NOT REQUIRED *	
TIME (E.G., 06,25,43 PM)	NOT REQUIRED *	
DAYLIGHT SAVINGS	ON ☐	OFF ■

* PROGRAMMED AT INSTALLATION DURING CALIBRATION PROCEDURE
☆ = 120' MINIMUM ISLAND DISTANCE TO BE ENTERED BY FIELD PERSONNEL FOR NON-DAXING APPLICATIONS WHEN ROAD IS 20' OR LESS WIDE.
☆☆ = INDICATE ON AS-IN-SERVICE DRAWINGS

EXPANDED PROGRAMMING DESIGN

SWITCH TO MS (ENTER EZ VALUE) T1:	10 EZ	
T2:	10 EZ	
TRANSFER DELAY MS TO GCP (0 = OFF) T1:	0 SEC.	
T2:	0 SEC.	
PRIME PREDICTION OFFSET (0 = OFF) T1:	0 FT.	
T2:	0 FT.	
PICKUP DELAY PRIME	15 SEC.	
PICKUP DELAY DAX A	15 SEC.	
PICKUP DELAY DAX B	15 ✕ 0 ✕ SEC.	
PICKUP DELAY DAX C	0 SEC.	
PICKUP DELAY DAX D	0 SEC.	
COMPENSATION VALUE T1:	NOT REQUIRED **	
COMPENSATION VALUE T2:	NOT REQUIRED **	
ENHANCED DETECTION (ED) T1:	ON ☐	OFF ■
T2:	ON ☐	OFF ■
BACK TO BACK T1 AND T2 (WHEN ED IS ON)	NO ■	YES ☐
STATION STOP TIMER (WHEN ED IS ON) T1:	10 SEC.	
T2:	10 SEC.	
# OF TRACK WIRES - 4 OR 6 T1:	4 ■	6 ☐
T2:	4 ■	6 ☐
LOW EX ADJUSTMENT T1:	0	
T2:	0	
LOW EZ DETECTION T1:	ON ☐	OFF ■
T2:	ON ☐	OFF ■
LOW EZ DETECTION TIMER T1:	10 MIN.	
T2:	10 MIN.	
POSITIVE START (0 = OFF) (ENTER EZ VALUE) T1:	0 EZ	
T2:	0 EZ	
POSITIVE START TIMEOUT (0 = NONE) (WHEN POTISIVE START IS ON) T1:	0 MIN.	
T2:	0 MIN.	
SET AT OPERATION	NORMAL ■	DIAGNOSTIC ☐
DIAGNOSTIC MESSAGES	ON ☐	OFF ■
DAX MESSAGES	ON ☐	OFF ■
ADVANCE PREEMP TIMER (0 = OFF)	0 SEC.	

** THE COMPENSATION VALUE IS PROVIDED BY THE 3000 GCP SYSTEM AND NO ADDITIONAL PROGRAMMING IS NORMALLY REQUIRED.

FIELD SET
03/19/13
⊖⊖⊖ : IN
✕✕✕ : OUT

GE TRANSPORTATION
INTELLIGENT CONTROL SYSTEMS
Jacksonville, Florida
CSX PROJ #, IL2011037A DATE, 01-29-13
DESIGNED BY, SAT CHECKED BY, DPL

LOCATION B

REVISIONS	
10-21-02 SWE	IL2002002
05-27-03 SWE	IL2002032

CSX TRANSPORTATION
RAIL TRANSPORT GROUP ENGINEERING
COMMUNICATIONS AND SIGNALS

CHATHAM → WILLOW CREEK TO BLUE ISLAND JCT.

DETECTION DEVICE PROGRAM

BLUE ISLAND, IL M.P. DC-14.54 → CHATHAM AVE., 163 413U, MP. DC-14.25

DESIGNED	DIGITIZED	CHECKED	DATE
SWE/STL	SWE/JSH	SWE/MJH	03-22-02

NEXT FILE	NEXT SH	FILE	SHEET
DC01454	C36	DC01454	C35

REV, 06-05-01 3000D2.C02

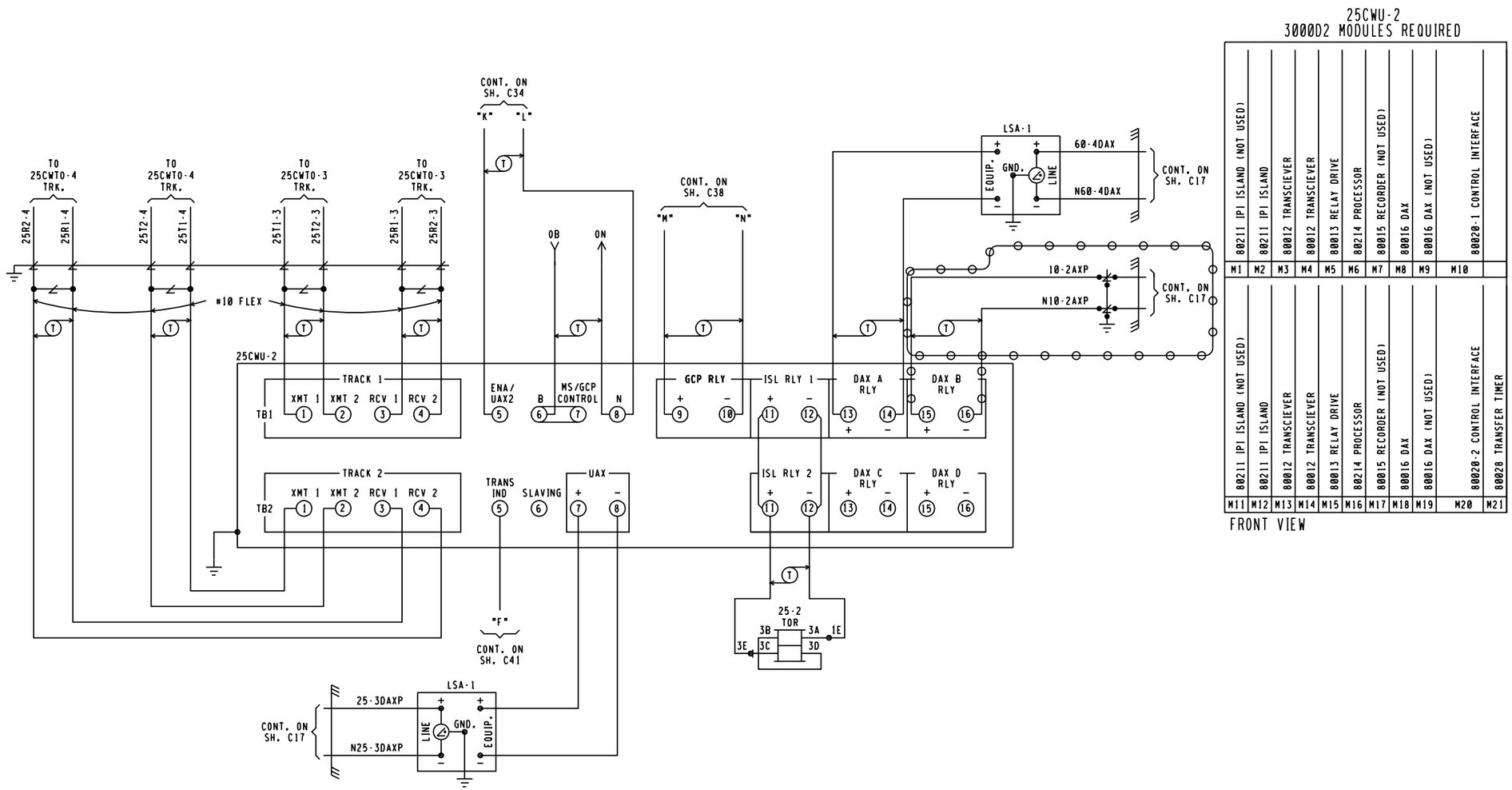

25CWU-2
3000D2 MODULES REQUIRED

80211 IPI ISLAND (NOT USED)	80211 IPI ISLAND	80012 TRANSCIEVER	80012 TRANSCIEVER	80013 RELAY DRIVE	80214 PROCESSOR	80015 RECORDER (NOT USED)	80016 DAX	80016 DAX (NOT USED)	80020-1 CONTROL INTERFACE	
M1	M2	M3	M4	M5	M6	M7	M8	M9	M10	
80211 IPI ISLAND (NOT USED)	80211 IPI ISLAND	80012 TRANSCIEVER	80012 TRANSCIEVER	80013 RELAY DRIVE	80214 PROCESSOR	80015 RECORDER (NOT USED)	80016 DAX	80016 DAX (NOT USED)	80020-2 CONTROL INTERFACE	80028 TRANSFER TIMER
M11	M12	M13	M14	M15	M16	M17	M18	M19	M20	M21

FRONT VIEW

IPI
MODULE 80211

SLOT M2 & M12
13.2KHZ

PLACE SHORTING BLOCK ACROSS 13.2KHZ PIN PAIRS

MODULE 80028
S4 DIP SWITCH POSITIONS *

SWITCH #	16	8	4	2	1
SWITCH POSITION	UP	DOWN	UP	DOWN	UP

* MAY BE SET PER FIELD CONDITIONS

MODULE 80028
S1 DIP SWITCH POSITIONS

SWITCH #	A	B	C	D
DAX USED	LEFT	RIGHT	RIGHT	RIGHT

LEFT INDICATES DAX USED

LEFT

FIELD SET
03/19/13

= IN
= OUT

GE TRANSPORTATION
INTELLIGENT CONTROL SYSTEMS
Jacksonville, Florida
CSX PROJ #, IL2011037A DATE, 01-29-13
DESIGNED BY, SAT CHECKED BY, DPL

LOCATION B

REVISIONS	
10-21-02 SWE	IL2002002

CSX TRANSPORTATION
RAIL TRANSPORT GROUP ENGINEERING
COMMUNICATIONS AND SIGNALS

CHATHAM → WILLOW CREEK TO BLUE ISLAND JCT.

CROSSING DETECTION CIRCUITRY

BLUE ISLAND, IL M.P. DC-14.54 → CHATHAM AVE., 163 413U, MP. DC-14.25

DESIGNED	DIGITIZED	CHECKED	DATE
SWE/STL	SWE/JSH	SWE/MJH	03-22-02

NEXT FILE	NEXT SH	FILE	SHEET
DC01454	C37	DC01454	C36

REV, 12-18-01 3000D2.C01

3000 GCP APPLICATION DESIGN CARD

EQUIPMENT: 3000 [ ] 3000D2 [■] 3000ND [ ] 3000ND2 [ ]

ISLAND FREQUENCY: T1: N/A KHZ T2: 13.2 KHZ 25 CWU-2

SOFTWARE LEVEL (DISPLAYED DURING BOOT-UP)		☆☆	
NUMBER OF TRACKS (NUMBER OF TRANSCEIVER MODULES, 1 OR 2)		1 [ ]	2 [■]
FREQUENCY (MS/GCP)	T1:	525 HZ	
	T2:	525 HZ	
UNIDIRECTIONAL / BIDIRECTIONAL	T1:	UNI [■]	BI [ ]
	T2:	UNI [■]	BI [ ]
XMIT LEVEL	T1:	HI [ ]	MED [■]
	T2:	HI [ ]	MED [■]
PREDICTOR/MOTION SENSOR	T1:	PRED [■]	MS [ ]
	T2:	PRED [■]	MS [ ]
WARNING TIME SELECTED	T1:	28 SEC.	
	T2:	28 SEC.	
APPROACH DISTANCE SELECTED	T1:	1248 FT.	
	T2:	800 FT.	
APPROACH DISTANCE COMPUTED	T1:	NOT REQUIRED *	
	T2:	NOT REQUIRED *	
UAX PICKUP DELAY (UAX1) (0 = OFF)		25 SEC.	
ENA/UAX2 DELAY (0 = ENA)		0 SEC.	
ISLAND DISTANCE (BETWEEN FEED WIRES)	T1:	0 FT.	
	T2:	159 FT.	
NUMBER OF DAX'S		0 [ ] 1 [■] 2 [■] 3 [ ] 4 [ ]	
DAX A TRACK ASSIGNMENT		T1 [ ]	T2 [■]
DAX A DISTANCE (0 = PREEMPT)		1407 FT.	
DAX A WARNING TIME		28 SEC.	
DAX B TRACK ASSIGNMENT		T1 [ ]	T2 [■]
DAX B DISTANCE (0 = PREEMPT)		3482 FT.	
DAX B WARNING TIME		60 SEC.	
DAX C TRACK ASSIGNMENT		T1 [ ]	T2 [ ]
DAX C DISTANCE (0 = PREEMPT)		FT.	
DAX C WARNING TIME		SEC.	
DAX D TRACK ASSIGNMENT		T1 [ ]	T2 [ ]
DAX D DISTANCE (0 = PREEMPT)		FT.	
DAX D WARNING TIME		SEC.	
SLAVING MASTER/SLAVE		MASTER [■]	SLAVE [ ]
PASSWORD ENABLED		DISABLED [■]	ENABLED [ ]
RECORDER INSTALLED		NOT INSTALLED [■]	INSTALLED [ ]
RS-232-C BAUD RATE		BPS	
RS-232-C DATE BITES		7 [ ]	8 [ ]
RS-232-C STOP BITS		1 [ ]	2 [ ]
RS-232-C PARITY		NONE [ ]	MARK [ ]
		ODD [ ]	SPACE [ ]
		EVEN [ ]	
DATE (E.G., MON 13 MAY 1991)		NOT REQUIRED *	
TIME (E.G., 06,25,43 PM)		NOT REQUIRED *	
DAYLIGHT SAVINGS		ON [ ]	OFF [■]

* PROGRAMMED AT INSTALLATION DURING CALIBRATION PROCEDURE
☆ = 120' MINIMUM ISLAND DISTANCE TO BE ENTERED BY FIELD PERSONNEL FOR NON-DAXING APPLICATIONS WHEN ROAD IS 20' OR LESS WIDE.
☆☆ = INDICATE ON AS-IN-SERVICE DRAWINGS

EXPANDED PROGRAMMING DESIGN

SWITCH TO MS (ENTER EZ VALUE)	T1:	10 EZ	
	T2:	10 EZ	
TRANSFER DELAY MS TO GCP (0 = OFF)	T1:	0 SEC.	
	T2:	0 SEC.	
PRIME PREDICTION OFFSET (0 = OFF)	T1:	0 FT.	
	T2:	0 FT.	
PICKUP DELAY PRIME		15 SEC.	
PICKUP DELAY DAX A		15 SEC.	
PICKUP DELAY DAX B		15 ~~0~~ SEC.	
PICKUP DELAY DAX C		0 SEC.	
PICKUP DELAY DAX D		0 SEC.	
COMPENSATION VALUE	T1:	NOT REQUIRED **	
COMPENSATION VALUE	T2:	NOT REQUIRED **	
ENHANCED DETECTION (ED)	T1:	ON [ ]	OFF [■]
	T2:	ON [ ]	OFF [■]
BACK TO BACK T1 AND T2 (WHEN ED IS ON)		NO [■]	YES [ ]
STATION STOP TIMER (WHEN ED IS ON)	T1:	10 SEC.	
	T2:	10 SEC.	
# OF TRACK WIRES - 4 OR 6	T1:	4 [■]	6 [ ]
	T2:	4 [■]	6 [ ]
LOW EX ADJUSTMENT	T1:	0	
	T2:	0	
LOW EZ DETECTION	T1:	ON [ ]	OFF [■]
	T2:	ON [ ]	OFF [■]
LOW EZ DETECTION TIMER	T1:	10 MIN.	
	T2:	10 MIN.	
POSITIVE START (0 = OFF) (ENTER EZ VALUE)	T1:	0 EZ	
	T2:	0 EZ	
POSITIVE START TIMEOUT (0 = NONE) (WHEN POTISIVE START IS ON)	T1:	0 MIN.	
	T2:	0 MIN.	
SET AT OPERATION		NORMAL [■]	DIAGNOSTIC [ ]
DIAGNOSTIC MESSAGES		ON [ ]	OFF [■]
DAX MESSAGES		ON [ ]	OFF [■]
ADVANCE PREEMP TIMER (0 = OFF)		0 SEC.	

** THE COMPENSATION VALUE IS PROVIDED BY THE 3000 GCP SYSTEM AND NO ADDITIONAL PROGRAMMING IS NORMALLY REQUIRED.

FIELD SET
03/19/13
~~OOO~~ : IN
~~XXX~~ : OUT

GE TRANSPORTATION
INTELLIGENT CONTROL SYSTEMS
Jacksonville, Florida
CSX PROJ #, IL2011037A DATE, 01-29-13
DESIGNED BY, SAT CHECKED BY, DPL

LOCATION B

REVISIONS	
10-21-02 SWE	IL2002002

CSX TRANSPORTATION
RAIL TRANSPORT GROUP ENGINEERING
COMMUNICATIONS AND SIGNALS

CHATHAM → WILLOW CREEK TO BLUE ISLAND JCT.

DETECTION DEVICE PROGRAM

BLUE ISLAND, IL M.P. DC-14.54 → CHATHAM AVE., 163 413U, MP. DC-14.25

DESIGNED	DIGITIZED	CHECKED	DATE
SWE/STL	SWE/GBT	SWE/MJH	03-22-02
NEXT FILE	NEXT SH	FILE	SHEET
DC01454	C38	DC01454	C37

REV, 06-05-01 3000D2.C02

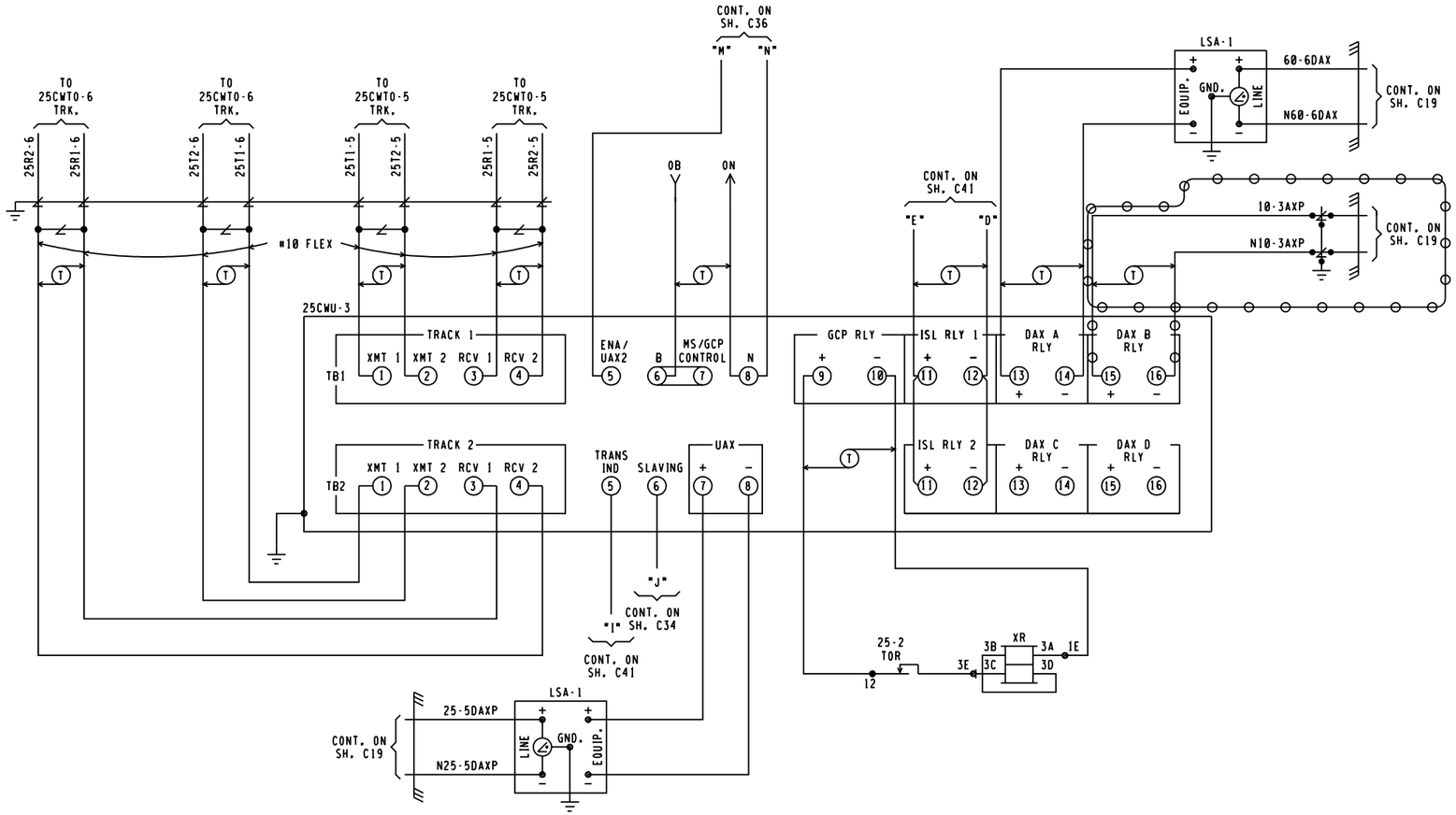

25CWU-3
3000D2 MODULES REQUIRED

M1	M2	M3	M4	M5	M6	M7	M8	M9	M10
80211 IPI ISLAND (NOT USED)	80211 IPI ISLAND	80012 TRANSCIEVER	80012 TRANSCIEVER	80013 RELAY DRIVE	80214 PROCESSOR	80015 RECORDER (NOT USED)	80016 DAX	80016 DAX (NOT USED)	80020-1 CONTROL INTERFACE

M11	M12	M13	M14	M15	M16	M17	M18	M19	M20	M21
80211 IPI ISLAND (NOT USED)	80211 IPI ISLAND	80012 TRANSCIEVER	80012 TRANSCIEVER	80013 RELAY DRIVE	80214 PROCESSOR	80015 RECORDER (NOT USED)	80016 DAX	80016 DAX (NOT USED)	80020-2 CONTROL INTERFACE	80020 TRANSFER TIMER

FRONT VIEW

WILL BE INSTALLED
ON PROJECT IL2002032

IPI
MODULE 80211

SLOT M2 & M12
15.2KHZ

PLACE SHORTING BLOCK ACROSS
15.2KHZ PIN PAIRS

MODULE 80028
S4 DIP SWITCH POSITIONS *

SWITCH #	16	8	4	2	1
SWITCH POSITION	UP	DOWN	UP	DOWN	UP

* MAY BE SET PER FIELD CONDITIONS

MODULE 80028
S1 DIP SWITCH POSITIONS

SWITCH #	A	B	C	D
DAX USED	LEFT	RIGHT	RIGHT	RIGHT

LEFT INDICATES DAX USED

LEFT

FIELD SET
03/19/13

: IN
: OUT

GE TRANSPORTATION
INTELLIGENT CONTROL SYSTEMS
Jacksonville, Florida
CSX PROJ #, IL2011037A DATE, 01-29-13
DESIGNED BY, SAT CHECKED BY, DPL

LOCATION B

REVISIONS	
10-21-02 SWE	IL2002002

CSX TRANSPORTATION
RAIL TRANSPORT GROUP ENGINEERING
COMMUNICATIONS AND SIGNALS

CHATHAM — WILLOW CREEK TO BLUE ISLAND JCT.

CROSSING DETECTION CIRCUITRY

BLUE ISLAND, IL M.P. DC-14.54 — CHATHAM AVE., 163 413U, MP. DC-14.25

DESIGNED	DIGITIZED	CHECKED	DATE
SWE/STL	SWE/JSH	SWE/MJH	03-22-02

NEXT FILE	NEXT SH	FILE	SHEET
DC01454	C39	DC01454	C38

REV, 12-18-01 3000D2.C01

3000 GCP APPLICATION DESIGN CARD

EQUIPMENT: 3000 [ ] 3000D2 [■]
3000ND [ ] 3000ND2 [ ]

ISLAND FREQUENCY: T1: N/A KHZ T2: 15.2 KHZ 25 CWU-3

SOFTWARE LEVEL (DISPLAYED DURING BOOT-UP)		☆☆	
NUMBER OF TRACKS (NUMBER OF TRANSCEIVER MODULES, 1 OR 2)		1 [ ]	2 [■]
FREQUENCY (NS/GCP)	T1:	430 HZ	
	T2:	430 HZ	
UNIDIRECTIONAL / BIDIRECTIONAL	T1:	UNI [■]	BI [ ]
	T2:	UNI [■]	BI [ ]
XMIT LEVEL	T1:	HI [ ]	MED [■]
	T2:	HI [ ]	MED [■]
PREDICTOR/MOTION SENSOR	T1:	PRED [■]	NS [ ]
	T2:	PRED [■]	NS [ ]
WARNING TIME SELECTED	T1:	28 SEC.	
	T2:	28 SEC.	
APPROACH DISTANCE SELECTED	T1:	1248 FT.	
	T2:	800 FT.	
APPROACH DISTANCE COMPUTED	T1:	NOT REQUIRED *	
	T2:	NOT REQUIRED *	
UAX PICKUP DELAY (UAX1) (0 = OFF)		25 SEC.	
ENA/UAX2 DELAY (0 = ENA)		0 SEC.	
ISLAND DISTANCE (BETWEEN FEED WIRES)	T1:	0 FT.	
	T2:	159 FT.	
NUMBER OF DAX'S		0 [ ] 1 [■] 2 [■] 3 [ ] 4 [ ]	
DAX A TRACK ASSIGNMENT		T1 [ ]	T2 [■]
DAX A DISTANCE (0 = PREEMPT)		1407 FT.	
DAX A WARNING TIME		28 SEC.	
DAX B TRACK ASSIGNMENT		T1 [ ]	T2 [■]
DAX B DISTANCE (0 = PREEMPT)		3482 FT.	
DAX B WARNING TIME		60 SEC.	
DAX C TRACK ASSIGNMENT		T1 [ ]	T2 [ ]
DAX C DISTANCE (0 = PREEMPT)		FT.	
DAX C WARNING TIME		SEC.	
DAX D TRACK ASSIGNMENT		T1 [ ]	T2 [ ]
DAX D DISTANCE (0 = PREEMPT)		FT.	
DAX D WARNING TIME		SEC.	
SLAVING MASTER/SLAVE		MASTER [■]	SLAVE [ ]
PASSWORD ENABLED		DISABLED [■]	ENABLED [ ]
RECORDER INSTALLED		NOT INSTALLED [■]	INSTALLED [ ]
RS-232-C BAUD RATE		BPS	
RS-232-C DATE BITES		7 [ ]	8 [ ]
RS-232-C STOP BITS		1 [ ]	2 [ ]
RS-232-C PARITY		NONE [ ]	MARK [ ]
		ODD [ ]	SPACE [ ]
		EVEN [ ]	
DATE (E.G., MON 13 MAY 1991)		NOT REQUIRED *	
TIME (E.G., 06:25:43 PM)		NOT REQUIRED *	
DAYLIGHT SAVINGS		ON [ ]	OFF [■]

* PROGRAMMED AT INSTALLATION DURING CALIBRATION PROCEDURE
☆ : 120' MINIMUM ISLAND DISTANCE TO BE ENTERED BY FIELD PERSONNEL FOR NON-DAXING APPLICATIONS WHEN ROAD IS 20' OR LESS WIDE.
☆☆ : INDICATE ON AS-IN-SERVICE DRAWINGS

EXPANDED PROGRAMMING DESIGN

SWITCH TO MS (ENTER EZ VALUE)	T1:	10 EZ	
	T2:	10 EZ	
TRANSFER DELAY MS TO GCP (0 = OFF)	T1:	0 SEC.	
	T2:	0 SEC.	
PRIME PREDICTION OFFSET (0 = OFF)	T1:	0 FT.	
	T2:	0 FT.	
PICKUP DELAY PRIME		15 SEC.	
PICKUP DELAY DAX A		15 SEC.	
PICKUP DELAY DAX B		15 0 SEC.	
PICKUP DELAY DAX C		0 SEC.	
PICKUP DELAY DAX D		0 SEC.	
COMPENSATION VALUE	T1:	NOT REQUIRED **	
COMPENSATION VALUE	T2:	NOT REQUIRED **	
ENHANCED DETECTION (ED)	T1:	ON [ ]	OFF [■]
	T2:	ON [ ]	OFF [■]
BACK TO BACK T1 AND T2 (WHEN ED IS ON)		NO [■]	YES [ ]
STATION STOP TIMER (WHEN ED IS ON)	T1:	10 SEC.	
	T2:	10 SEC.	
# OF TRACK WIRES - 4 OR 6	T1:	4 [■]	6 [ ]
	T2:	4 [■]	6 [ ]
LOW EX ADJUSTMENT	T1:	0	
	T2:	0	
LOW EZ DETECTION	T1:	ON [ ]	OFF [■]
	T2:	ON [ ]	OFF [■]
LOW EZ DETECTION TIMER	T1:	10 MIN.	
	T2:	10 MIN.	
POSITIVE START (0 = OFF) (ENTER EZ VALUE)	T1:	0 EZ	
	T2:	0 EZ	
POSITIVE START TIMEOUT (0 = NONE) (WHEN POTISIVE START IS ON)	T1:	0 MIN.	
	T2:	0 MIN.	
SET AT OPERATION		NORMAL [■]	DIAGNOSTIC [ ]
DIAGNOSTIC MESSAGES		ON [ ]	OFF [■]
DAX MESSAGES		ON [ ]	OFF [■]
ADVANCE PREEMP TIMER (0 = OFF)		0 SEC.	

** THE COMPENSATION VALUE IS PROVIDED BY THE 3000 GCP SYSTEM AND NO ADDITIONAL PROGRAMMING IS NORMALLY REQUIRED.

FIELD SET
03/19/13
: IN
: OUT

GE TRANSPORTATION
INTELLIGENT CONTROL SYSTEMS
Jacksonville, Florida
CSX PROJ #: IL2011037A DATE: 01-29-13
DESIGNED BY: SAT CHECKED BY: DPL

LOCATION B

REVISIONS	
10-21-02 SWE	IL2002002

CHATHAM → WILLOW CREEK TO BLUE ISLAND JCT.

BLUE ISLAND, IL M.P. DC-14.54 → CHATHAM AVE., 163 413U, MP. DC-14.25

CSX TRANSPORTATION
RAIL TRANSPORT GROUP ENGINEERING
COMMUNICATIONS AND SIGNALS

DETECTION DEVICE PROGRAM

DESIGNED	DIGITIZED	CHECKED	DATE
SWE/STL	SWE/GBT	SWE/MJH	03-22-02

NEXT FILE	NEXT SH	FILE	SHEET
DC01454	C40	DC01454	C39

REV: 06-05-01 3000D2.C02