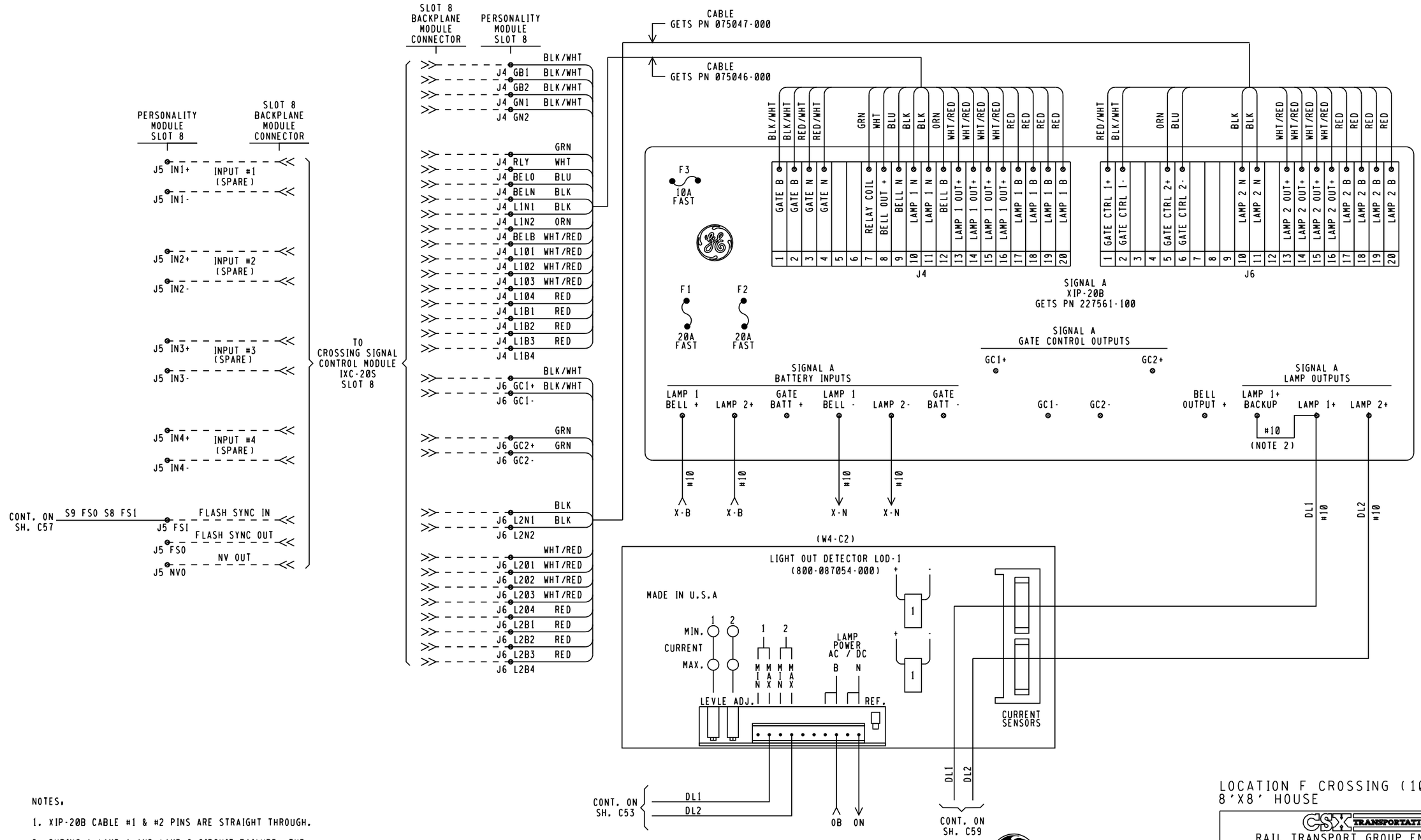

NOTES:

1. XIP-20B CABLE #1 & #2 PINS ARE STRAIGHT THROUGH.
2. DURING A LAMP 1 AND LAMP 2 CIRCUIT FAILURE, THE LAMP 1 BACKUP TERMINAL OUTPUT VOLTAGE IS SLIGHTLY LESS THAN THE LAMP BATTERY BUSS VOLTAGE. IF INTERNAL IXC-20S VOLTAGE REGULATION IS ENABLED, UNDER NORMAL CIRCUMSTANCES AND WITH NO EXTERNAL RESISTANCE APPLIED, THE USER MAY DESIRE TO REMOVE THIS JUMPER AND ADD RESISTANCE BETWEEN THE LAMP 1 BACKUP TERMINAL AND THE LAMP 1 NEAR SIGNAL LOAD(S) TO PROVIDE RESISTIVE BALANCE BETWEEN THE NEAR AND FAR SIGNALS.
3. ALL WIRE THIS SHEET #16 UNLESS NOTED.

LOCATION F CROSSING (10-4CWU)
8'X8' HOUSE

CSX TRANSPORTATION
RAIL TRANSPORT GROUP ENGINEERING
COMMUNICATIONS AND SIGNALS

B.I. JUNCTION
BROADWAY ST. (163416P)
XP4 SIGNAL C CROSSING SIGNAL CONTROL CIRCUITRY
ALSIP, IL M.P. DC-15.04

NEW WORK
GE TRANSPORTATION
INTELLIGENT CONTROL SYSTEMS
Jacksonville, Florida
CSX PROJ #: IL2011037A DATE: 08-08-13
DESIGNED BY: SAT CHECKED BY: DPL

DESIGNED	DIGITIZED	CHECKED	DATE
GET/DLK	GET/SAT	GET/FAP	08-08-13

DESIGN DATE	REV. NO.	DRAWING	SHEET NO	FILE	SHEET
08-08-13	3	-----	-----	DC01504	C57A

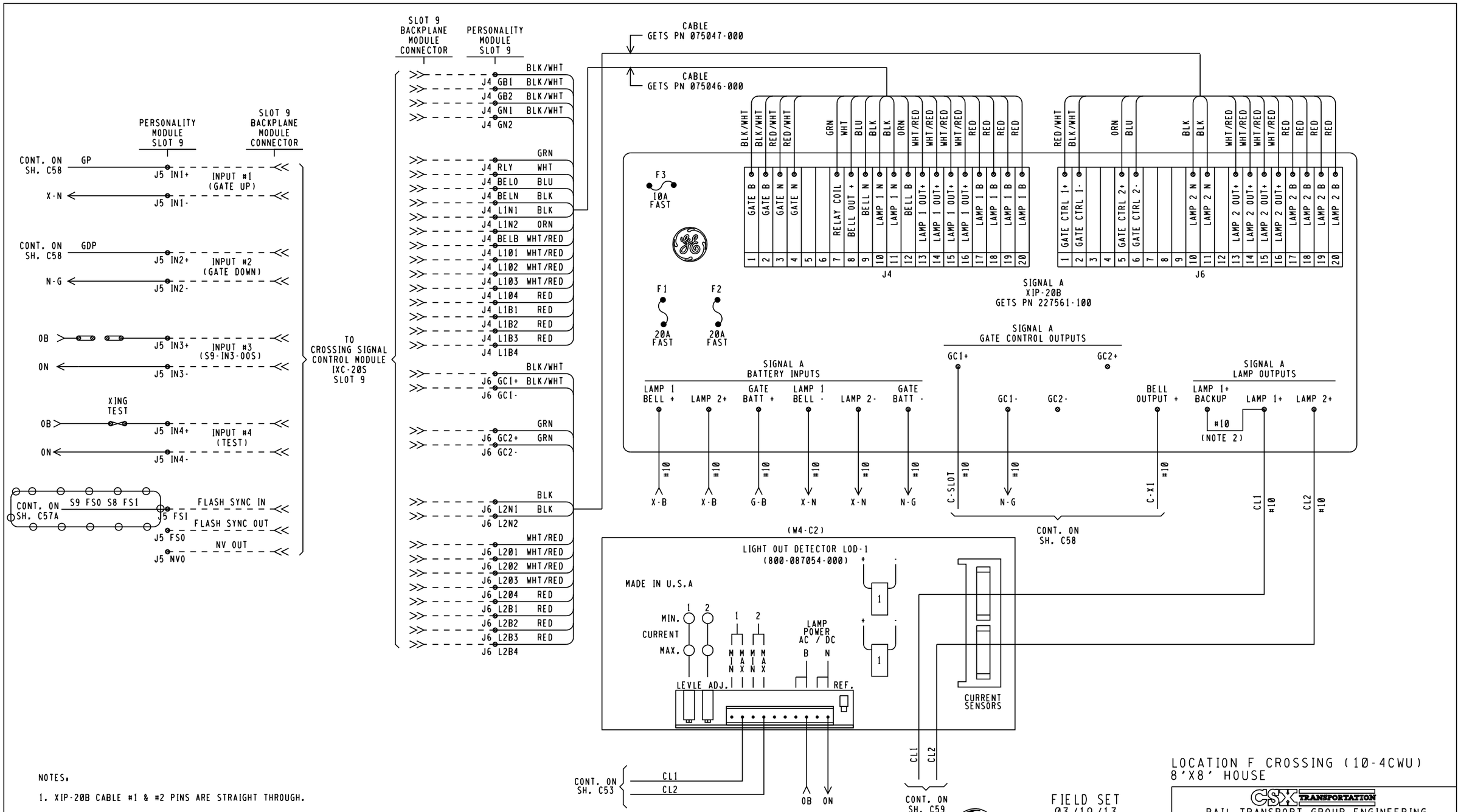

NOTES:

1. XIP-20B CABLE #1 & #2 PINS ARE STRAIGHT THROUGH.
2. DURING A LAMP 1 AND LAMP 2 CIRCUIT FAILURE, THE LAMP 1 BACKUP TERMINAL OUTPUT VOLTAGE IS SLIGHTLY LESS THAN THE LAMP BATTERY BUSS VOLTAGE. IF INTERNAL IXC-20S VOLTAGE REGULATION IS ENABLED, UNDER NORMAL CIRCUMSTANCES AND WITH NO EXTERNAL RESISTANCE APPLIED, THE USER MAY DESIRE TO REMOVE THIS JUMPER AND ADD RESISTANCE BETWEEN THE LAMP 1 BACKUP TERMINAL AND THE LAMP 1 NEAR SIGNAL LOAD(S) TO PROVIDE RESISTIVE BALANCE BETWEEN THE NEAR AND FAR SIGNALS.
3. ALL WIRE THIS SHEET #16 UNLESS NOTED.

FIELD REVISION
SAT/DPL
08/08/13
= IN
= OUT
= NOTE

FIELD SET
03/19/13

NEW WORK

GE TRANSPORTATION
INTELLIGENT CONTROL SYSTEMS
Jacksonville, Florida
CSX PROJ #: IL2011037A DATE: 01-29-13
DESIGNED BY: SAT CHECKED BY: DPL

LOCATION F CROSSING (10-4CWU)
8'X8' HOUSE

CSX TRANSPORTATION
RAIL TRANSPORT GROUP ENGINEERING
COMMUNICATIONS AND SIGNALS

B.I. JUNCTION
BROADWAY ST. (163416P)
XP4 SIGNAL C CROSSING SIGNAL CONTROL CIRCUITRY
ALSIP, IL M.P. DC-15.04

DESIGNED	DIGITIZED	CHECKED	DATE
GET/DLK	GET/SAT	GET/FAP	08-25-12

DESIGN DATE	REV. NO.	DRAWING	SHEET NO	FILE	SHEET
08-25-12	3	-----	-----	DC01504	C57

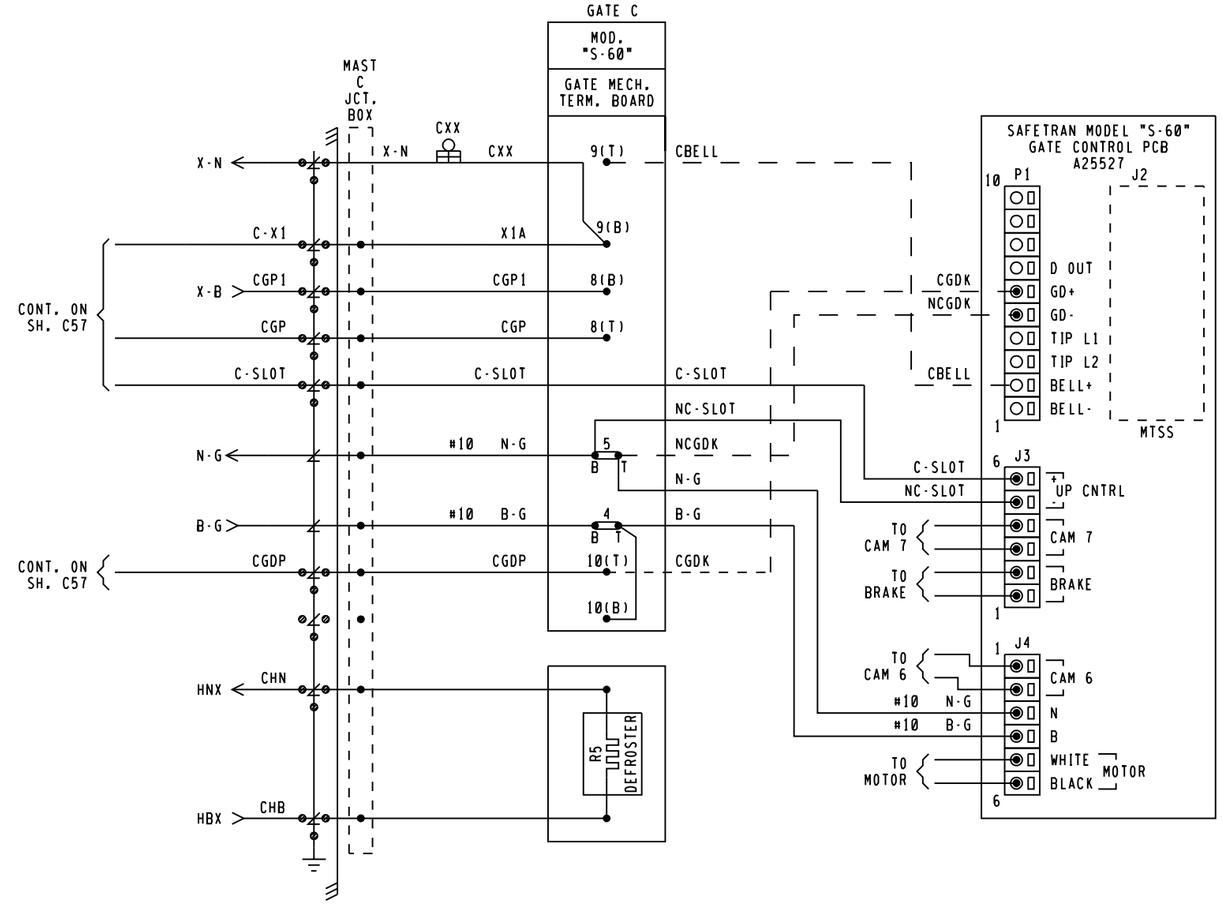

LOCATION F CROSSING (10-4CWU)
8'X8' HOUSE

NEW WORK

GE TRANSPORTATION
INTELLIGENT CONTROL SYSTEMS
Jacksonville, Florida

CSX PROJ #: IL2011037 DATE: 08-25-12
DESIGNED BY: DLK CHECKED BY: FAP

CSX TRANSPORTATION
RAIL TRANSPORT GROUP ENGINEERING
COMMUNICATIONS AND SIGNALS

B.I. JUNCTION
BROADWAY ST. (163416P)
CROSSING WARNING DEVICE GATE CIRCUITRY
ALSIP, IL M.P. DC-15.04

DESIGNED	DIGITIZED	CHECKED	DATE
GET/DLK	GET/SAT	GET/FAP	08-25-12

DESIGN DATE	REV. NO.	DRAWING	SHEET NO	FILE	SHEET
08-25-12	3	-----	-----	DC01504	C58

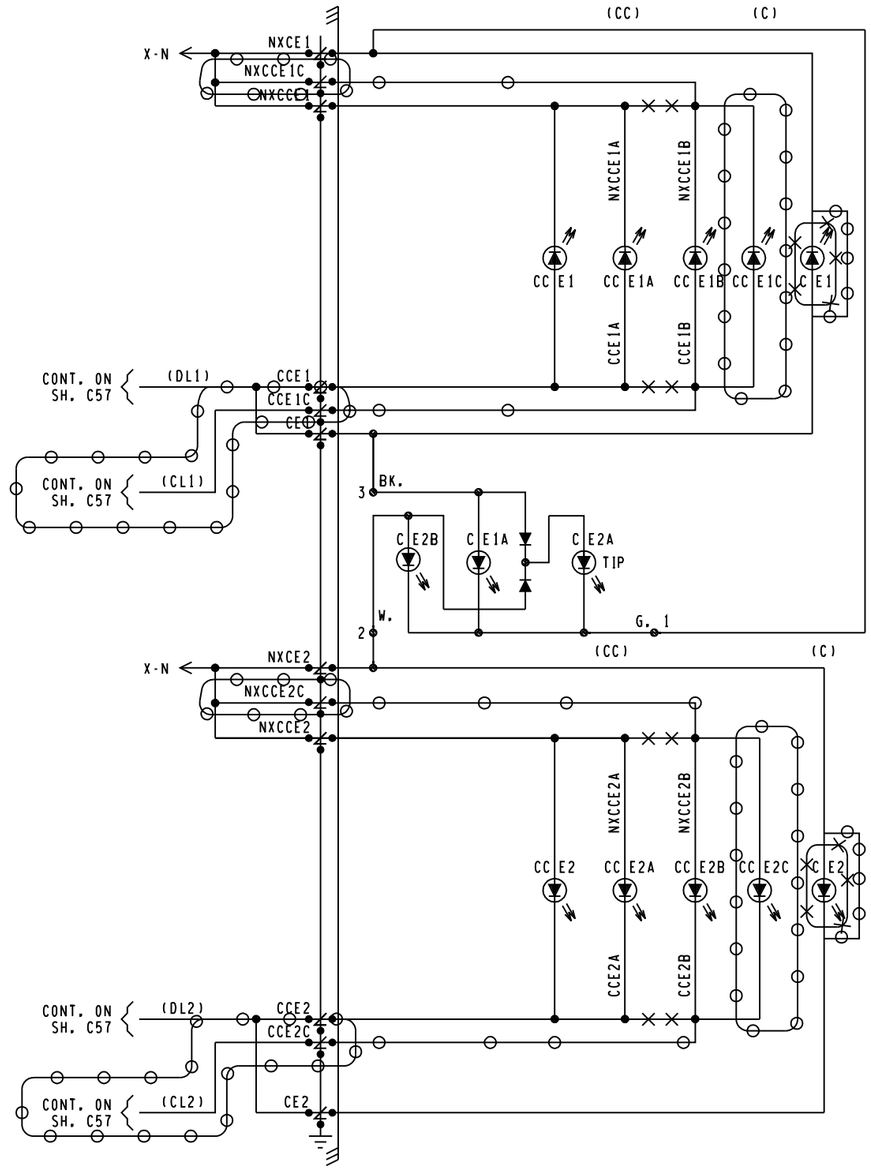

FIELD REVISION
SAT/DPL
08/08/13

= IN

= OUT

= NOTE

NEW WORK

GE TRANSPORTATION
INTELLIGENT CONTROL SYSTEMS
Jacksonville, Florida

CSX PROJ #, IL2011037 DATE, 08-25-12
DESIGNED BY, DLK CHECKED BY, FAP

LOCATION F CROSSING (10-4CWU)
8'X8' HOUSE

CSX TRANSPORTATION
RAIL TRANSPORT GROUP ENGINEERING
COMMUNICATIONS ANC SIGNALS

B.I. JUNCTION
BROACWAY ST. (163416P)
CROSSING WARNING DEVICE LIGHT CIRCUITRY
ALSIP, IL M.P. DC-15.04

CESIGNEC	CIGITIZEC	CHECKEC	CATE
GET/DLK	GET/SAT	GET/FAP	08-25-12

CESIGN CATE	REV. NO.	CRAWING	SHEET NO	FILE	SHEET
08-25-12	3	-----	-----	DC01504	C59

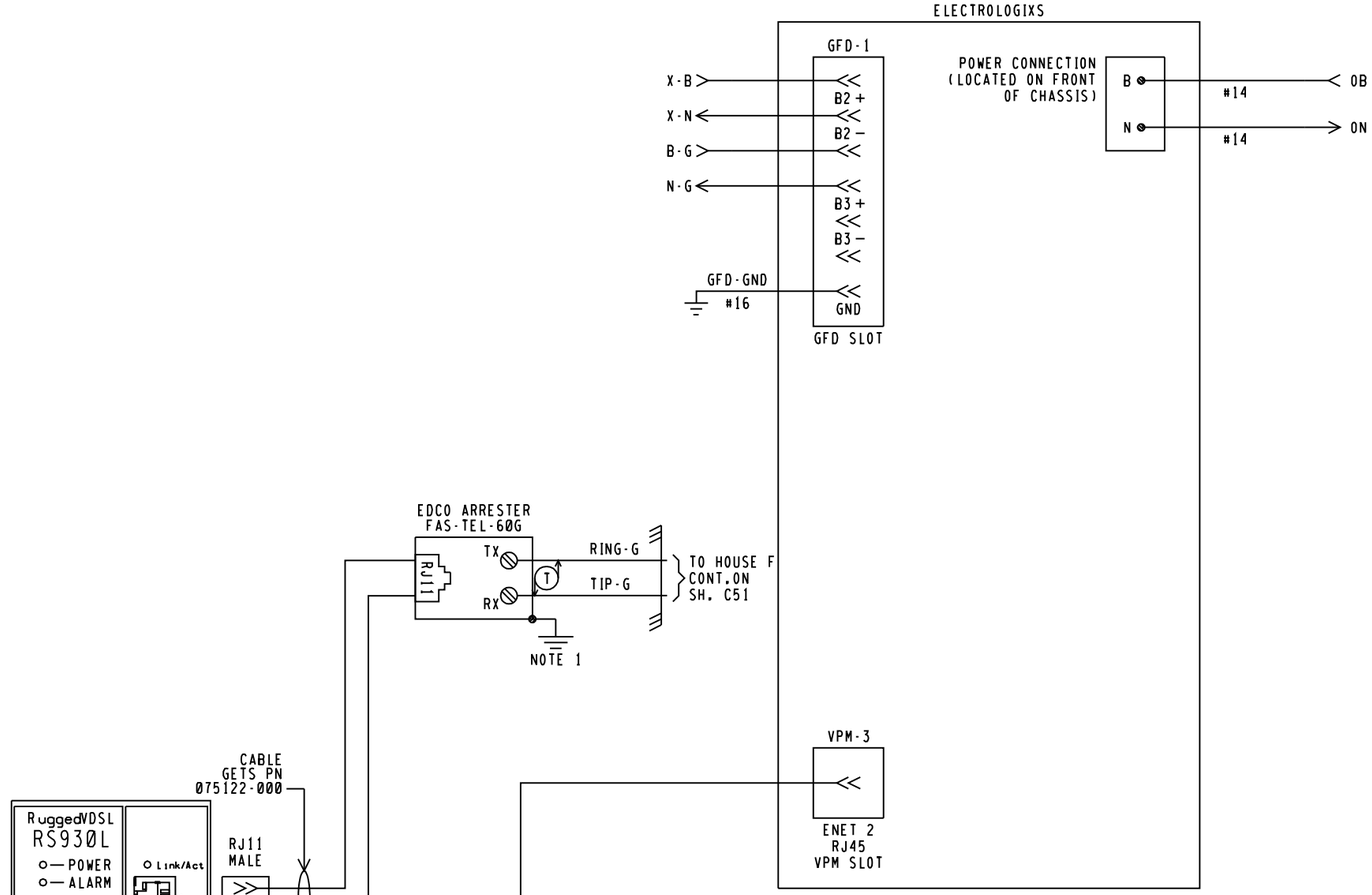

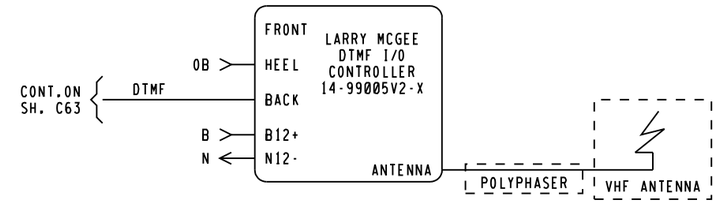

DTMF CONTROLLER SETUP						
DTMF DIGIT SET	1	2	3	4	5	6
	×	×	×	D	D	D
TIME SET	6 (THIS EQUALS 60 SECONDS)					
RADIO CHANNEL SELECT	4 = 160.785 MHZ					

PROGRAMMING FOR DTMF RADIO

REMOTE DTMF CROSSING ACTIVATION (ACTIVATES ENTIRE CROSSING)	
TO ACTIVATE PRESS,	162#
TO DE-ACTIVATE PRESS,	162*
(ACTIVATION WILL TIME OUT AFTER 60 SEC.)	
REMOTE DTMF LIGHTING ACTIVATION (ACTIVATES FLASHING LIGHTS ONLY)	
TO ACTIVATE PRESS,	1621#
TO DE-ACTIVATE PRESS,	1621*
(ACTIVATION WILL TIME OUT AFTER 60 SEC.)	

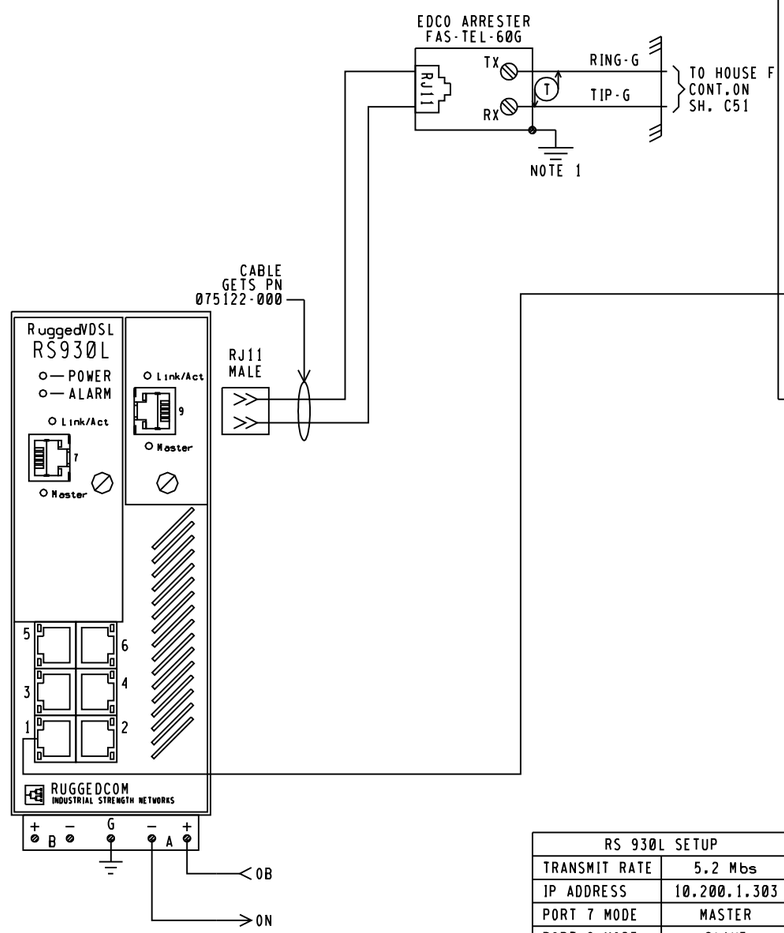

RS 930L SETUP	
TRANSMIT RATE	5.2 Mbs
IP ADDRESS	10.200.1.303
PORT 7 MODE	MASTER
PORT 9 MODE	SLAVE

NOTES,

1. THE GROUND CONNECTION MAY BE ATTACHED TO TERMINALS 1, 10 OR BOTH.

LOCATION G CROSSING (10-5CWU)
6'X6' HOUSE

NEW WORK

GE TRANSPORTATION
INTELLIGENT CONTROL SYSTEMS
Jacksonville, Florida
CSX PROJ #,IL2011037 DATE,08-25-12
DESIGNED BY,DLK CHECKED BY,FAP

CSX TRANSPORTATION
RAIL TRANSPORT GROUP ENGINEERING
COMMUNICATIONS AND SIGNALS

B.I. JUNCTION
BROADWAY ST. (283162H)
10-5CWU ELECTROLOGIXS CIRCUITS
ALSIP, IL M.P. DC-15.04

DESIGNED	DIGITIZED	CHECKED	DATE
GET/DLK	GET/SAT	GET/FAP	08-25-12

DESIGN DATE	REV. NO.	DRAWING	SHEET NO	FILE	SHEET
08-25-12	3	-----	-----	DC01504	C60

SITE SPECIFIC MDR DESCRIPTIONS AND SETTINGS

NAME		105 MDR1			MDR2			MDR3			MDR4			MDR5			MDR6		
FUNCTION		10-5			NA			NA			NA			NA			NA		
WARNING TIME		60			NA			NA			NA			NA			NA		
CW/MD		CW*			NA			NA			NA			NA			NA		
AP TIME(PREEMPT)		30			NA			NA			NA			NA			NA		
CWE-WT		80			NA			NA			NA			NA			NA		
AUX RECOVERY DELAY		5			NA			NA			NA			NA			NA		
TRACK		TK 1	TK 2	TK 3	TK 1	TK 2	TK 3	TK 1	TK 2	TK 3	TK 1	TK 2	TK 3	TK 1	TK 2	TK 3	TK 1	TK 2	TK 3
TRACK ASSIGNED		ASSIGNED	UNASSIGNED	UNASSIGNED	UNASSIGNED	UNASSIGNED	UNASSIGNED	UNASSIGNED	UNASSIGNED	UNASSIGNED	UNASSIGNED	UNASSIGNED	UNASSIGNED	UNASSIGNED	UNASSIGNED	UNASSIGNED	UNASSIGNED	UNASSIGNED	UNASSIGNED
OFFSET DISTANCE		0'	NA	NA	NA	NA	NA	NA	NA	NA	NA	NA	NA	NA	NA	NA	NA	NA	NA
MD RESTART		0*	NA	NA	NA	NA	NA	NA	NA	NA	NA	NA	NA	NA	NA	NA	NA	NA	NA
SUDDEN SHUNT ZONE		0*	NA	NA	NA	NA	NA	NA	NA	NA	NA	NA	NA	NA	NA	NA	NA	NA	NA
POSITIVE START	PSEN	DISABLE	NA	NA	NA	NA	NA	NA	NA	NA	NA	NA	NA	NA	NA	NA	NA	NA	NA
	PSRX	NA	NA	NA	NA	NA	NA	NA	NA	NA	NA	NA	NA	NA	NA	NA	NA	NA	NA
	PST	NA	NA	NA	NA	NA	NA	NA	NA	NA	NA	NA	NA	NA	NA	NA	NA	NA	NA
POST JOINT DETECT	PJEN	DISABLE	NA	NA	NA	NA	NA	NA	NA	NA	NA	NA	NA	NA	NA	NA	NA	NA	NA
	PJRX	NA	NA	NA	NA	NA	NA	NA	NA	NA	NA	NA	NA	NA	NA	NA	NA	NA	NA
	PJDT	NA	NA	NA	NA	NA	NA	NA	NA	NA	NA	NA	NA	NA	NA	NA	NA	NA	NA
CLEAR JOINT LOS	CJ-LOS MODE	STANDARD	NA	NA	NA	NA	NA	NA	NA	NA	NA	NA	NA	NA	NA	NA	NA	NA	NA
	CJ-LOS RX	15	NA	NA	NA	NA	NA	NA	NA	NA	NA	NA	NA	NA	NA	NA	NA	NA	NA
	CJ-LOS TIME	5	NA	NA	NA	NA	NA	NA	NA	NA	NA	NA	NA	NA	NA	NA	NA	NA	NA

BASIC TRACK SETUP	
	TRACK 1
FREQUENCY	267 HZ
MASTER/SLAVE	MASTER
RX ADJUST	100 *
TCA	*
DIRECTION MODE	BI
LIA	*
ADVANCED APPROACH	*
NBS COMP RX	*
TRK ISLAND ASSIGN	NA
APPROACH LENGTH	2507'
AUTO RX	ENABLE

VPM3 ETHERNET REMOTE SETUP	
REMOTE 1 [F HOUSE]	
LOC NETWORK ID	1015
DESTINATION NETWORK ID	1010
DESTINATION IP ADDRESS	10.200.1.110
RP 2000 PORT NUMBER	8280

VPM3 ETHERNET SETUP	
	IP ADDRESS
ETHERNET PORT 1 (TOP)	192.168.0.11
ETHERNET PORT 2 (BOTTOM)	10.200.1.120

ADVANCED TRACK SETUP		
		TRACK 1
MOTION DET TIMER	MDEN	DISABLE
	MDTT	10 MIN
FALSE SHUNT	FSEN	DISABLE
	FSRX	NA
	FST	NA
APPROACH RELEASE	AREN	DISABLE
	ARRX	NA
	ART	NA
LOS TIME		16 SEC
IJ-LOS TIME		5 SEC
NRML*SHRT*VRYSHRT		*

ISLAND SETUP	
	TRACK 1
ENABLE/DISABLE	ENABLE
FREQUENCY	4.9 KHZ
LOSS OF SHUNT	2 SEC.
FAULT DELAY	1 OR 2

GATE DELAY SETUP	
IXC-20S SLOT 4	4 SECONDS

ADJACENT CLEARANCE TIMER	
105MDR1R	18 SECONDS

NOTES:
* = FIELD ADJUSTMENT
NA = NOT APPLICABLE

LOCATION G CROSSING (10-5CWU)
6'X6' HOUSE

FIELD SET
06/11/13

NEW WORK

GE TRANSPORTATION
INTELLIGENT CONTROL SYSTEMS
Jacksonville, Florida
CSX PROJ #:IL2011037A DATE:01-29-13
DESIGNED BY:SAT CHECKED BY:DPL

C4R-3.C02
REV. 02-29-12

CSX TRANSPORTATION
RAIL TRANSPORT GROUP ENGINEERING
COMMUNICATIONS AND SIGNALS

B.I. JUNCTION
BROADWAY ST. (283162H)
XP4 10CWU-5 MODULE SETUP INFORMATION
ALSIP, FL M.P. DC-15.04

DESIGNED	DIGITIZED	CHECKED	DATE
GET/DLK	GET/SAT	GET/FAP	08-25-12

DESIGN DATE	REV. NO.	DRAWING	SHEET NO	FILE	SHEET
08-25-12	3	-----	-----	DC01504	C61

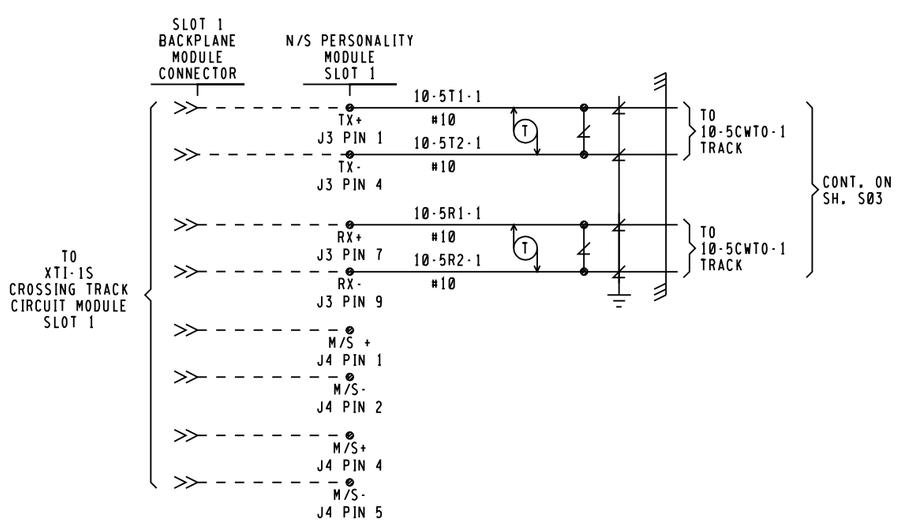

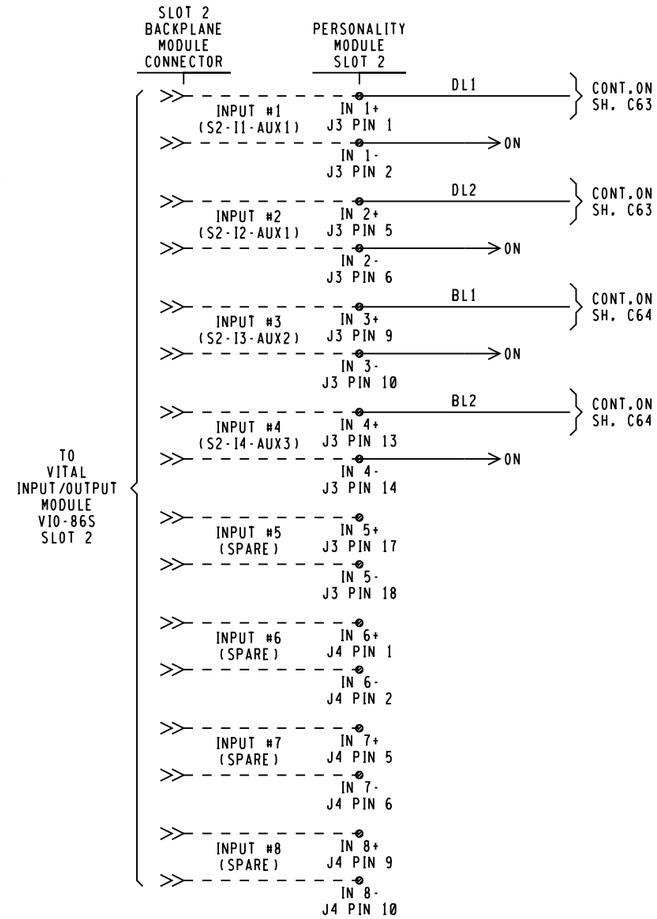

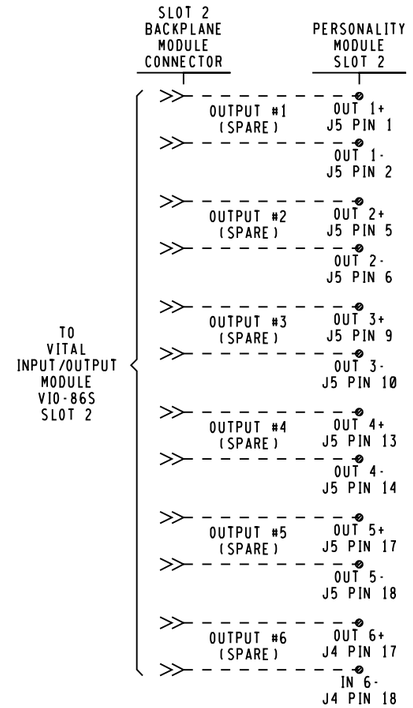

NOTES
1. ALL WIRE THIS SHEET #16 AWG UNLESS NOTED.
2. APPROACH DISABLE JUMPER INPUT. THIS INPUT IS USED IN COMBINATION WITH THE SOFT APPROACH DISABLE ACCESSED THROUGH THE CDU-1 KEYPAD. BOTH BITS MUST BE HIGH TO DISABLE AN APPROACH. THE OPERATOR IS SOLELY RESPONSIBLE FOR CROSSING PROTECTION WHEN THE APPROACH DISABLE FUNCTION IS ACTIVATED.

LOCATION G CROSSING (10-5CWU)
6'X6' HOUSE

NEW WORK
GE TRANSPORTATION
INTELLIGENT CONTROL SYSTEMS
Jacksonville, Florida
CSX PROJ #,IL2011037 DATE,08-25-12
DESIGNED BY,DLK CHECKED BY,FAP

C4R-3.C01
REV. 12-12-11

CSX TRANSPORTATION
RAIL TRANSPORT GROUP ENGINEERING
COMMUNICATIONS AND SIGNALS

B.I. JUNCTION
BROADWAY ST. (283162H)
XP4 10-5CWU MODULE CONNECTOR USAGE
ALSIP, IL M.P. DC-15.04

DESIGNED	DIGITIZED	CHECKED	DATE
GET/DLK	GET/SAT	GET/FAP	08-25-12

DESIGN DATE	REV. NO.	DRAWING	SHEET NO	FILE	SHEET
08-25-12	3	-----	-----	DC01504	C62

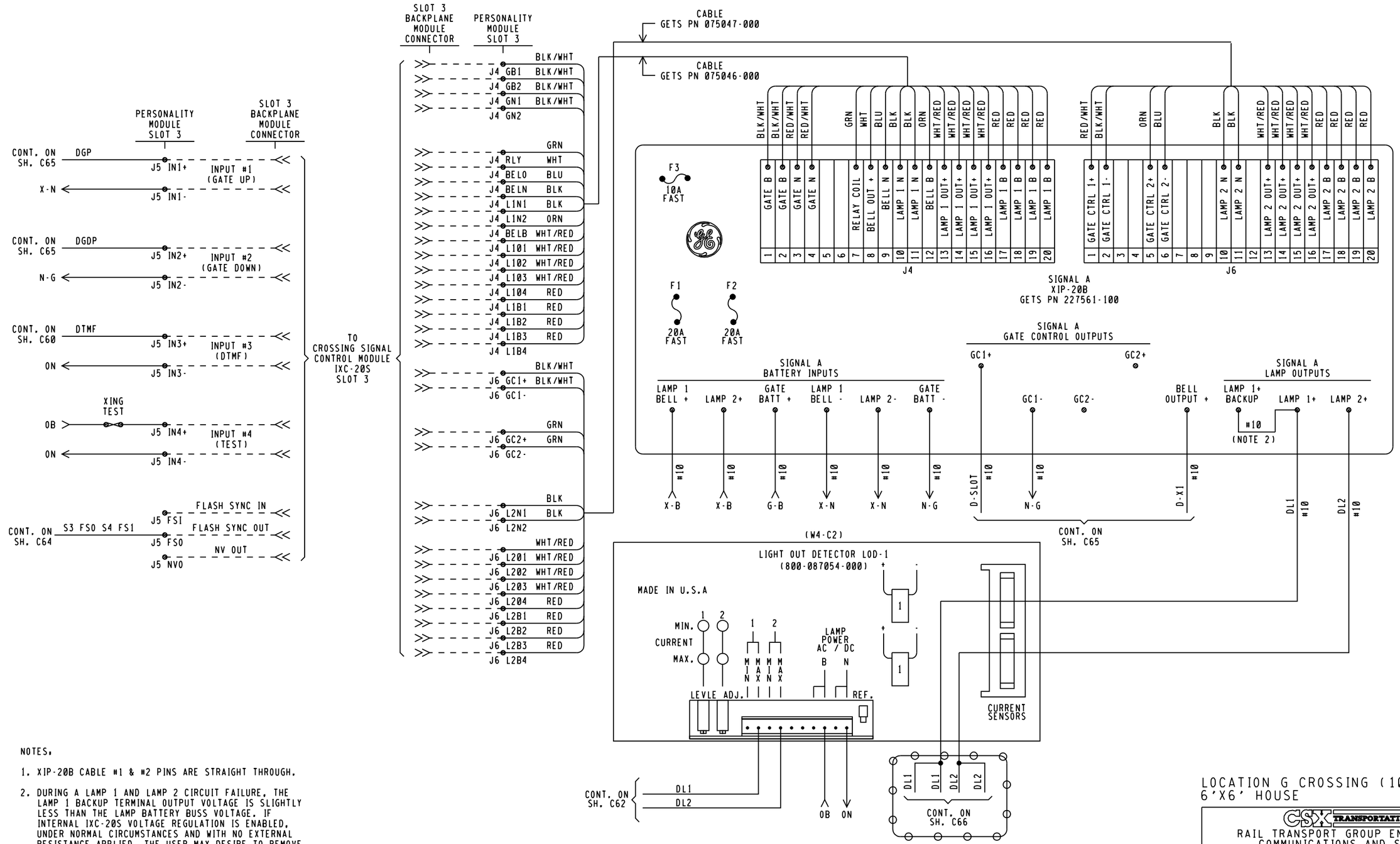

NOTES,

1. XIP-20B CABLE #1 & #2 PINS ARE STRAIGHT THROUGH.
2. DURING A LAMP 1 AND LAMP 2 CIRCUIT FAILURE, THE LAMP 1 BACKUP TERMINAL OUTPUT VOLTAGE IS SLIGHTLY LESS THAN THE LAMP BATTERY BUSS VOLTAGE. IF INTERNAL IXC-20S VOLTAGE REGULATION IS ENABLED, UNDER NORMAL CIRCUMSTANCES AND WITH NO EXTERNAL RESISTANCE APPLIED, THE USER MAY DESIRE TO REMOVE THIS JUMPER AND ADD RESISTANCE BETWEEN THE LAMP 1 BACKUP TERMINAL AND THE LAMP 1 NEAR SIGNAL LOAD(S) TO PROVIDE RESISTIVE BALANCE BETWEEN THE NEAR AND FAR SIGNALS.
3. ALL WIRE THIS SHEET #16 UNLESS NOTED.

FIELD REVISION
SAT/DPL
08/08/13

= IN
= OUT
= NOTE

FIELD SET
03/19/13

NEW WORK

GE TRANSPORTATION
INTELLIGENT CONTROL SYSTEMS
Jacksonville, Florida
CSX PROJ #,IL2011037A DATE,01-29-13
DESIGNED BY,SAT CHECKED BY,DPL

LOCATION G CROSSING (10-5CWU)
6'X6' HOUSE

CSX TRANSPORTATION
RAIL TRANSPORT GROUP ENGINEERING
COMMUNICATIONS AND SIGNALS

B.I. JUNCTION
BROADWAY ST. (283162H)
XP4 SIGNAL D
CROSSING SIGNAL CONTROL CIRCUITRY
ALSIP, IL M.P. DC-15.04

XP4 IXC CIRCUITS.C03
REV. 03-21-12

DESIGNED	DIGITIZED	CHECKED	DATE
GET/DLK	GET/SAT	GET/DPL	08-25-12

DESIGN DATE	REV. NO.	DRAWING	SHEET NO	FILE	SHEET
08-25-12	3	-----	-----	DC01504	C63

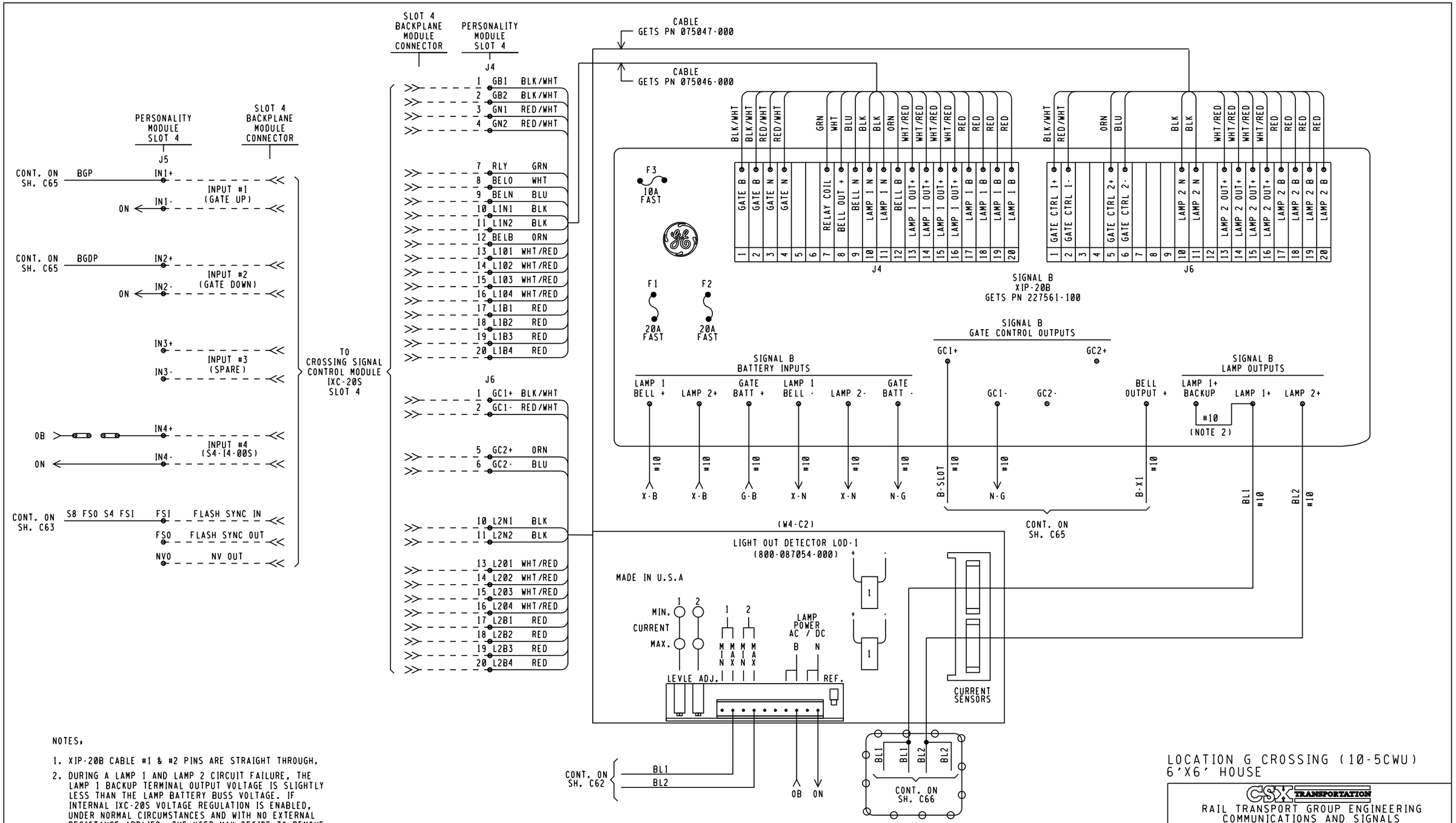

NOTES:

1. XIP-20B CABLE #1 & #2 PINS ARE STRAIGHT THROUGH.
2. DURING A LAMP 1 AND LAMP 2 CIRCUIT FAILURE, THE LAMP 1 BACKUP TERMINAL OUTPUT VOLTAGE IS SLIGHTLY LESS THAN THE LAMP BATTERY BUSS VOLTAGE. IF INTERNAL IXC-20S VOLTAGE REGULATION IS ENABLED, UNDER NORMAL CIRCUMSTANCES AND WITH NO EXTERNAL RESISTANCE APPLIED, THE USER MAY DESIRE TO REMOVE THIS JUMPER AND ADD RESISTANCE BETWEEN THE LAMP 1 BACKUP TERMINAL AND THE LAMP 1 NEAR SIGNAL LOAD(S) TO PROVIDE RESISTIVE BALANCE BETWEEN THE NEAR AND FAR SIGNALS.
3. ALL WIRE THIS SHEET #16 UNLESS NOTED.

FIELD REVISION
SAT/DPL
08/08/13

= IN
= OUT
= NOTE

FIELD SET
03/19/13

NEW WORK

GE TRANSPORTATION
INTELLIGENT CONTROL SYSTEMS
Jacksonville, Florida
CSX PROJ #:IL2011037A DATE:01-29-13
DESIGNED BY:SAT CHECKED BY:DPL

LOCATION G CROSSING (10-5CWU)
6'X6' HOUSE

CSX TRANSPORTATION
RAIL TRANSPORT GROUP ENGINEERING
COMMUNICATIONS AND SIGNALS

B.I. JUNCTION
BROADWAY ST. (283162H)
XP4 SIGNAL B
CROSSING SIGNAL CONTROL CIRCUITRY
ALSIP, IL M.P. DC-15.04

XP4 IXC CIRCUITS.C04
REV. 03-21-12

DESIGNED	DIGITIZED	CHECKED	DATE
GET/DLK	GET/SAT	GET/DPL	08-25-12

DESIGN DATE	REV. NO.	DRAWING	SHEET NO	FILE	SHEET
08-25-12	3	-----	-----	DC01504	C64

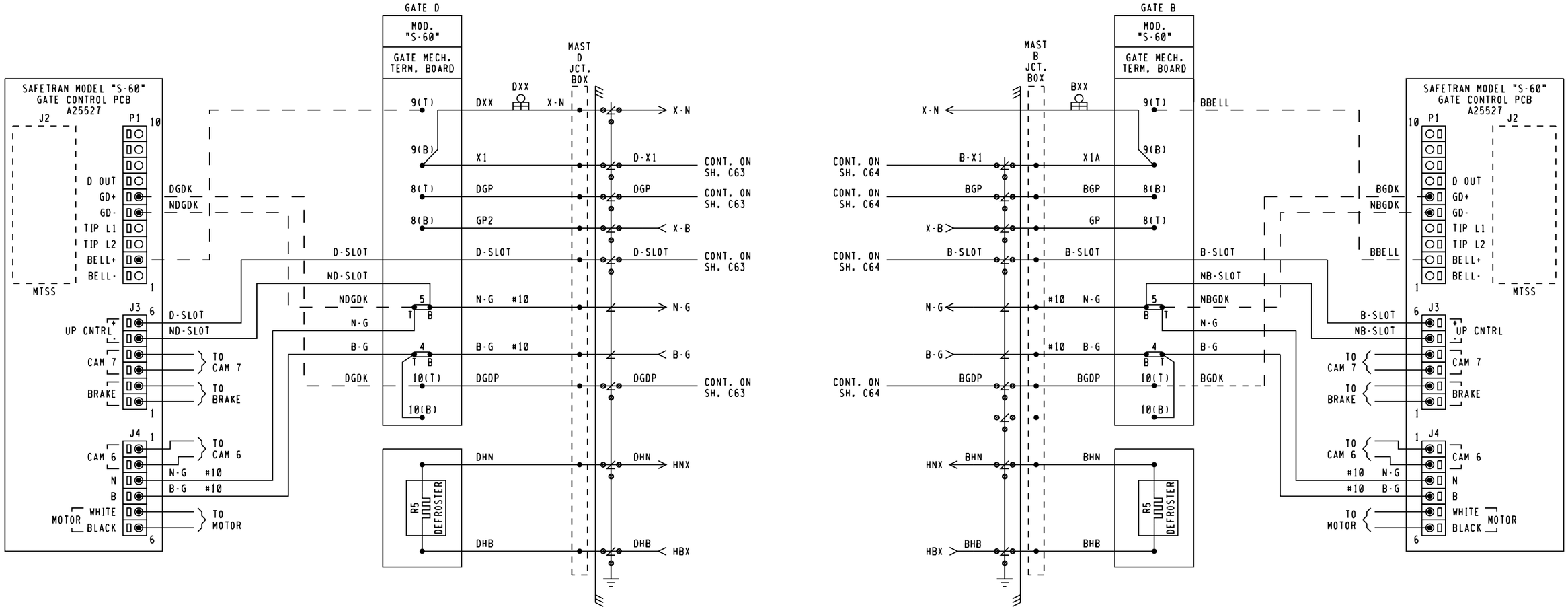

NOTES:

1. ALL WIRING IN SHEET TO BE #10 UNLESS OTHERWISE NOTED.

FIELD SET
03/19/13

NEW WORK

GE TRANSPORTATION
INTELLIGENT CONTROL SYSTEMS
Jacksonville, Florida
CSX PROJ #: IL2011037A DATE: 01-29-13
DESIGNED BY: SAT CHECKED BY: DPL

LOCATION G CROSSING (10-5CWU)
6'X6' HOUSE

CSX TRANSPORTATION
RAIL TRANSPORT GROUP ENGINEERING
COMMUNICATIONS AND SIGNALS

B.I. JUNCTION
BROADWAY ST. (283162H)
CROSSING WARNING DEVICE GATE CIRCUITRY
ALSIP, IL M.P. DC-15.04

XP4 S60.C05
REV. 03-21-12

DESIGNED	DIGITIZED	CHECKED	DATE
GET/DLK	GET/SAT	GET/DPL	08-25-12

DESIGN DATE	REV. NO.	DRAWING	SHEET NO	FILE	SHEET
08-25-12	3	-----	-----	DC01504	C65

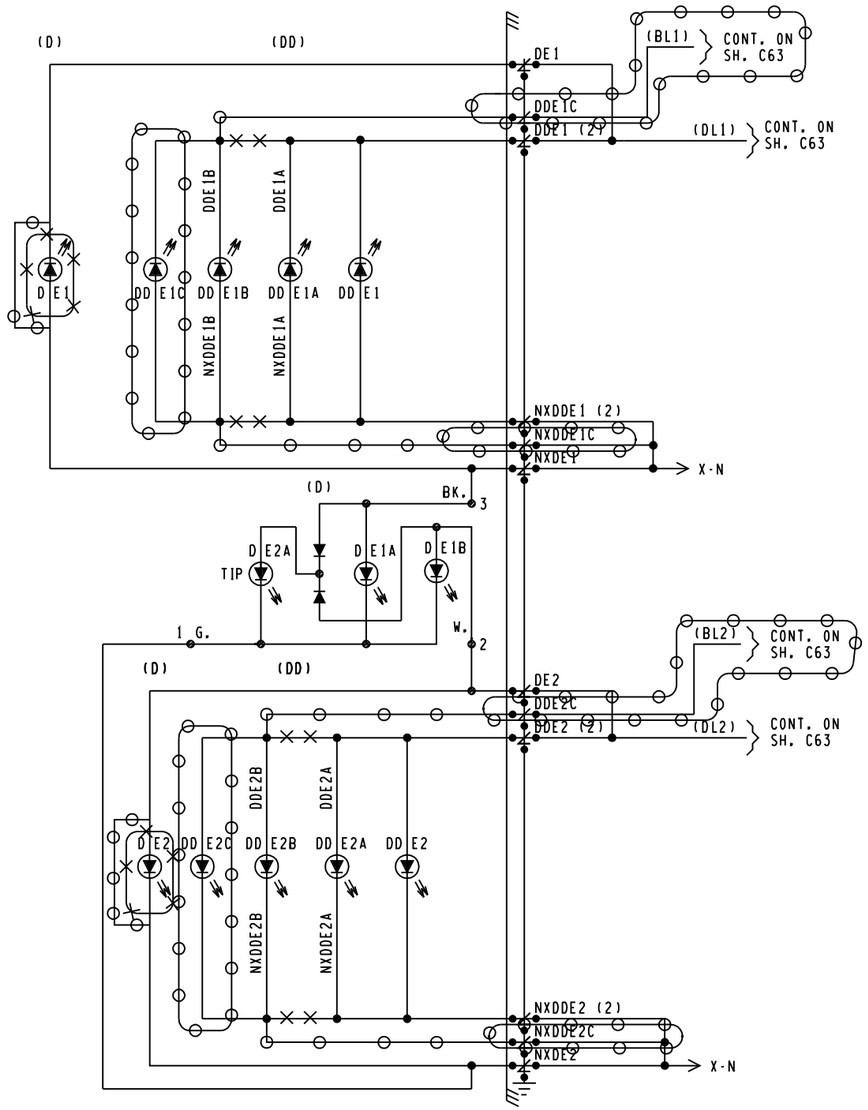

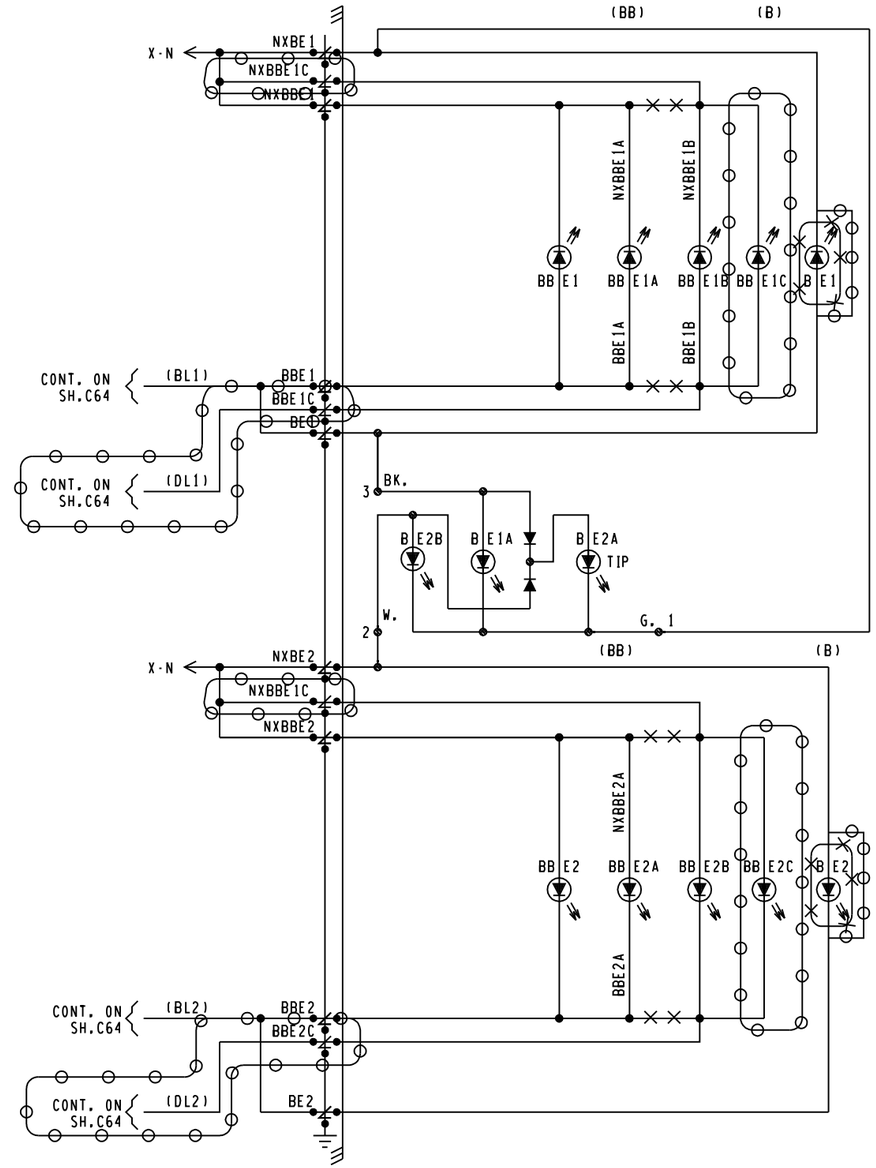

LOCATION G CROSSING (10-5CWU)
6'X6' HOUSE

FIELD REVISION
SAT/DPL
08/08/13

= IN
= OUT
= NOTE

NEW WORK

GE TRANSPORTATION
INTELLIGENT CONTROL SYSTEMS
Jacksonville, Florida
CSX PROJ #, IL2011037 DATE, 08-25-12
DESIGNED BY, DLK CHECKED BY, FAP

PMD3RCPML.C02
REV. 01-08-10

CSX TRANSPORTATION
RAIL TRANSPORT GROUP ENGINEERING
COMMUNICATIONS AND SIGNALS

B.I. JUNCTION
BROADWAY ST. (283162H)
CROSSING WARNING DEVIBE LIGHT CIRCUITRY
ALSIP, IL M.P. DC-15.04

DESIGNED	DIGITIZED	CHECKED	DATE
GET/DLK	GET/SAT	GET/DPL	08-25-12

DESIGN DATE	REV. NO.	DRAWING	SHEET NO	FILE	SHEET
08-25-12	3	------	------	DC01504	C66

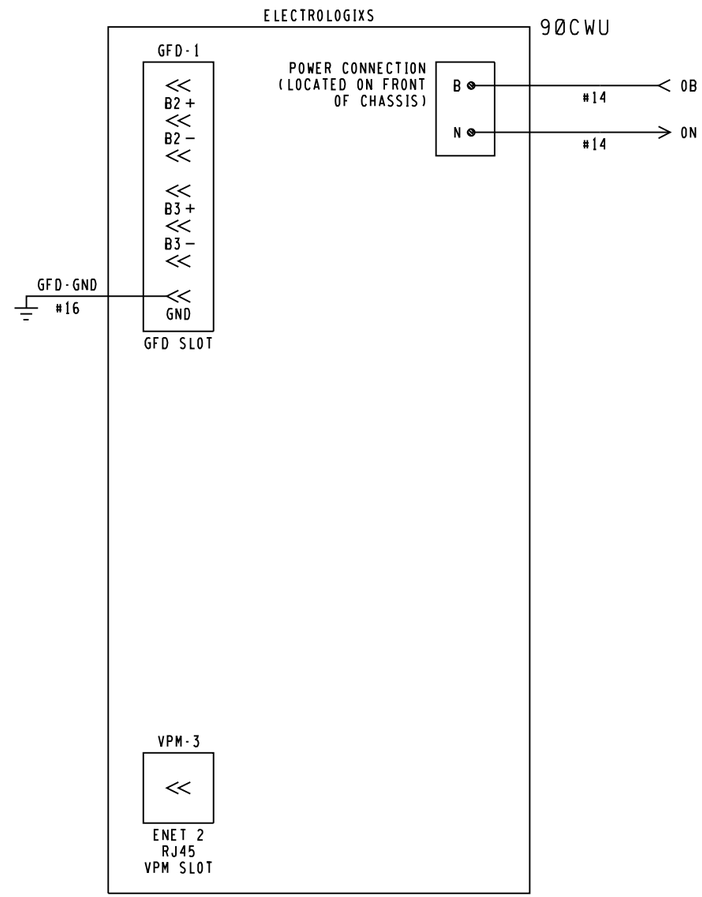

NOTE:

(✕) = SUPPLIED & WIRED BY RAILROAD.

REMOTE CROSSING HOUSE XP4-90CWU

NEW WORK

GE TRANSPORTATION
INTELLIGENT CONTROL SYSTEMS
Jacksonville, Florida

CSX PROJ #: IL2011037 DATE: 08-25-12
DESIGNED BY: DLK CHECKED BY: FAP

DX0ELX3.C11
REV: 08-31-10

CSX TRANSPORTATION
RAIL TRANSPORT GROUP ENGINEERING
COMMUNICATIONS AND SIGNALS

B.I. JUNCTION
BROADWAY ST. (163416P)
90CWU ELECTROLOGIXS XP4 CIRCUITS
ALSIP, IL M.P. DC-15.04

DESIGNED	DIGITIZED	CHECKED	DATE
GET/DLK	GET/SAT	GET/FAP	08-25-12

DESIGN DATE	REV. NO.	DRAWING	SHEET NO	FILE	SHEET
08-25-12	3	-----	-----	DC01504	C67

SITE SPECIFIC MDR DESCRIPTIONS AND SETTINGS

NAME		MDR1				MDR2				MDR3				MDR4				MDR5			
FUNCTION		AX1				AX2				AX3				AX4				AX5			
WARNING TIME		60				60				25				25				NA			
CW/MD		CW*				CW*				CW*				CW*				NA			
AP TIME(PREEMPT)		NA				NA				NA				NA				NA			
CWE-WT		80				80				80				80				NA			
AUX RECOVERY DELAY		0				0				0				0				NA			
TRACK		TK 1	TK 2	TK 3	TK 4	TK 1	TK 2	TK 3	TK 4	TK 1	TK 2	TK 3	TK 4	TK 1	TK 2	TK 3	TK 4	TK 1	TK 2	TK 3	TK 4
TRACK ASSIGNED		ASSIGNED	UNASSIGNED	UNASSIGNED	UNASSIGNED	UNASSIGNED	UNASSIGNED	UNASSIGNED	UNASSIGNED	UNASSIGNED	UNASSIGNED	ASSIGNED	UNASSIGNED	UNASSIGNED	UNASSIGNED	UNASSIGNED	ASSIGNED	UNASSIGNED	UNASSIGNED	UNASSIGNED	UNASSIGNED
OFFSET DISTANCE		576'	NA	NA	NA	NA	576'	NA	NA	NA	NA	1487'	NA	NA	NA	NA	1487'	NA	NA	NA	NA
MD RESTART		0*	NA	NA	NA	NA	0*	NA	NA	NA	NA	0*	NA	NA	NA	NA	0*	NA	NA	NA	NA
SUDDEN SHUNT ZONE		0*	NA	NA	NA	NA	0*	NA	NA	NA	NA	0*	NA	NA	NA	NA	0*	NA	NA	NA	NA
POSITIVE START	PSEN	DISABLE	NA	NA	NA	NA	DISABLE	NA	NA	NA	NA	DISBALE	NA	NA	NA	NA	DISBALE	NA	NA	NA	NA
	PSRX	NA	NA	NA	NA	NA	NA	NA	NA	NA	NA	NA	NA	NA	NA	NA	NA	NA	NA	NA	NA
	PST	NA	NA	NA	NA	NA	NA	NA	NA	NA	NA	NA	NA	NA	NA	NA	NA	NA	NA	NA	NA
POST JOINT DETECT	PJEN	ENABLE	NA	NA	NA	NA	ENABLE	NA	NA	NA	NA	DISABLE	NA	NA	NA	NA	DISABLE	NA	NA	NA	NA
	PJRX	15	NA	NA	NA	NA	15	NA	NA	NA	NA	NA	NA	NA	NA	NA	NA	NA	NA	NA	NA
	PJDT	15	NA	NA	NA	NA	15	NA	NA	NA	NA	NA	NA	NA	NA	NA	NA	NA	NA	NA	NA
CLEAR JOINT LOS	CJ-LOS MODE	STANDARD	NA	NA	NA	NA	STANDARD	NA	NA	NA	NA	STANDARD	NA	NA	NA	NA	STANDARD	NA	NA	NA	NA
	CJ-LOS RX	15	NA	NA	NA	NA	15	NA	NA	NA	NA	15	NA	NA	NA	NA	15	NA	NA	NA	NA
	CJ-LOS TIME	5	NA	NA	NA	NA	5	NA	NA	NA	NA	5	NA	NA	NA	NA	5	NA	NA	NA	NA

BASIC TRACK SETUP

	TRACK 1	TRACK 2	TRACK 3	TRACK 4
FREQUENCY	151 HZ	151 HZ	790 HZ	979 HZ
MASTER/SLAVE	MASTER	SLAVE	MASTER	MASTER
RX ADJUST	100 *	100 *	100 *	100 *
TCA	*	*	*	*
DIRECTION MODE	UNI	UNI	UNI	UNI
LIA	*	*	*	*
ADVANCED APPROACH	*	*	*	*
NBS COMP RX	*	*	*	*
TRK ISLAND ASSIGN	NA	NA	NA	NA
APPROACH LENGTH	1558'	1558'	250'	250'
AUTO RX	ENABLE	ENABLE	ENABLE	ENABLE

VPM3 ETHERNET SETUP

	IP ADDRESS
ETHERNET PORT 1 (TOP)	192.168.0.11
ETHERNET PORT 2 (BOTTOM)	10.200.1.102

ADVANCED TRACK SETUP

		TRACK 1	TRACK 2	TRACK 3	TRACK 4
MOTION DET TIMER	MDEN	DISABLE	DISABLE	DISABLE	DISABLE
	MDTT	10 MIN	10 MIN	10 MIN	10 MIN
FALSE SHUNT	FSEN	DISABLE	DISABLE	DISABLE	DISABLE
	FSRX	NA	NA	NA	NA
	FST	NA	NA	NA	NA
APPROACH RELEASE	AREN	DISABLE	DISABLE	DISABLE	DISABLE
	ARRX	NA	NA	NA	NA
	ART	NA	NA	NA	NA
LOS TIME		16 SEC	16 SEC	16 SEC	16 SEC
IJ-LOS TIME		5 SEC	5 SEC	5 SEC	5 SEC
NRML*SHRT*VRYSHRT		*	*	*	*

ISLAND SETUP (NOT USED)

	TRACK 1	TRACK 2	TRACK 3	TRACK 4
ENABLE/DISABLE	DISABLE	DISABLE	DISABLE	DISABLE
FREQUENCY	X.X KHZ	X.X KHZ	X.X KHZ	X.X KHZ
LOSS OF SHUNT	2 SEC.	2 SEC.	2 SEC.	2 SEC.
FAULT DELAY	1 OR 2	1 OR 2	1 OR 2	1 OR 2

NOTES:
* = FIELD ADJUSTMENT
NA = NOT APPLICABLE

FIELD SET
06/11/13

NEW WORK

GE TRANSPORTATION
INTELLIGENT CONTROL SYSTEMS
Jacksonville, Florida
CSX PROJ #:IL2011037A DATE:01-29-13
DESIGNED BY:SAT CHECKED BY:DPL

C4R-3.C02
REV. 02-29-12

REMOTE CROSSING HOUSE XP4-90CWU

CSX TRANSPORTATION
RAIL TRANSPORT GROUP ENGINEERING
COMMUNICATIONS AND SIGNALS

B.I. JUNCTION
BROADWAY ST. (163416P)
XP4 90CWU MODULE SETUP INFORMATION
ALSIP, IL M.P. DC-15.04

DESIGNED	DIGITIZED	CHECKED	DATE
GET/DLK	GET/SAT	GET/FAP	08-25-12

DESIGN DATE	REV. NO.	DRAWING	SHEET NO	FILE	SHEET
08-25-12	3	-----	-----	DC01504	C68

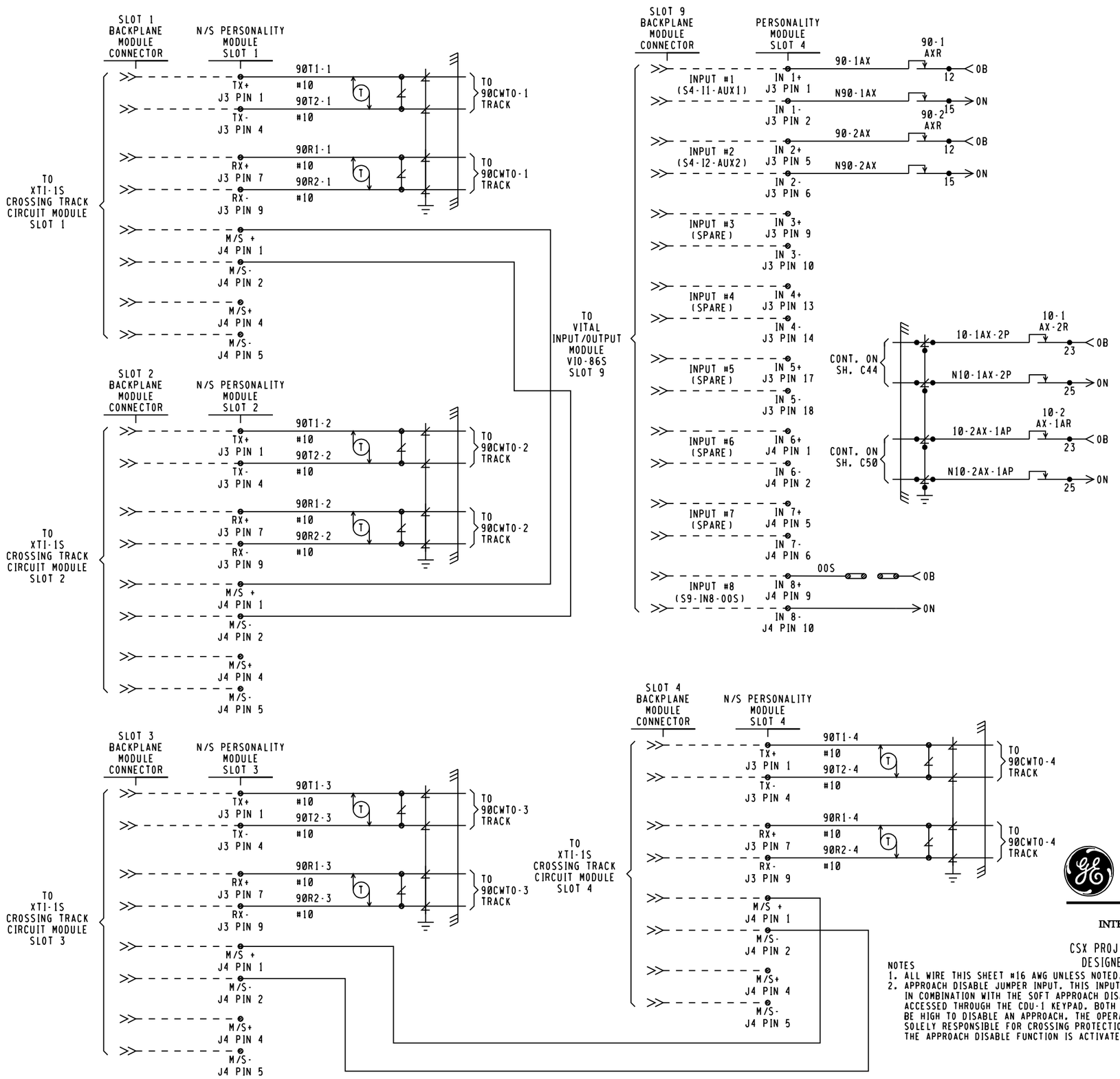

FIELD SET
03/19/13

REMOTE CROSSING HOUSE XP4-90CWU

NEW WORK

GE TRANSPORTATION
INTELLIGENT CONTROL SYSTEMS
Jacksonville, Florida

CSX PROJ #.IL2011037A DATE.01-29-13
DESIGNED BY.SAT CHECKED BY.DPL

NOTES
1. ALL WIRE THIS SHEET #16 AWG UNLESS NOTED.
2. APPROACH DISABLE JUMPER INPUT. THIS INPUT IS USED IN COMBINATION WITH THE SOFT APPROACH DISABLE ACCESSED THROUGH THE CDU-1 KEYPAD. BOTH BITS MUST BE HIGH TO DISABLE AN APPROACH. THE OPERATOR IS SOLELY RESPONSIBLE FOR CROSSING PROTECTION WHEN THE APPROACH DISABLE FUNCTION IS ACTIVATED.

C4R-3.C01
REV. 12-12-11

CSX TRANSPORTATION
RAIL TRANSPORT GROUP ENGINEERING
COMMUNICATIONS AND SIGNALS

B.I. JUNCTION
BROADWAY ST. (163416P)
XP4 90CWU MODULE CONNECTOR USAGE
ALSIP, IL M.P. DC-15.04

DESIGNED	DIGITIZED	CHECKED	DATE
GET/DLK	GET/SAT	GET/FAP	08-25-12

DESIGN DATE	REV. NO.	DRAWING	SHEET NO	FILE	SHEET
08-25-12	3	-----	-----	DC01504	C69

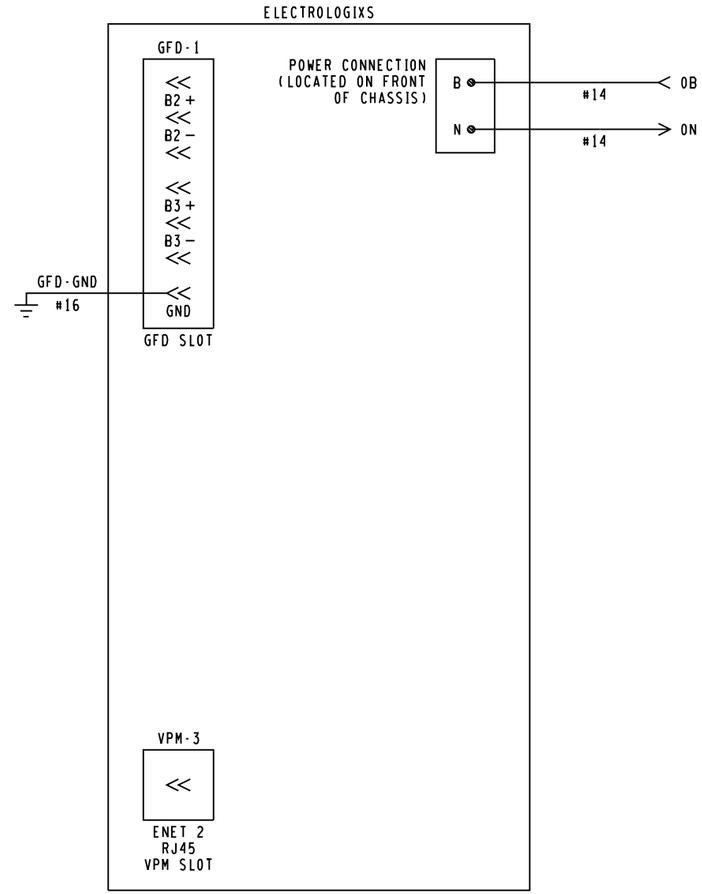

NOTE:

(✕) = SUPPLIED & WIRED BY RAILROAD.

REMOTE CROSSING XP4-47CWU

NEW WORK

GE TRANSPORTATION
INTELLIGENT CONTROL SYSTEMS
Jacksonville, Florida

CSX PROJ #: IL2011037 DATE: 08-25-12
DESIGNED BY: DLK CHECKED BY: FAP

DXOELX3.C11
REV: 08-31-10

CSX TRANSPORTATION
RAIL TRANSPORT GROUP ENGINEERING
COMMUNICATIONS AND SIGNALS

B.I. JUNCTION
BROADWAY ST. (163416P)
47CWU ELECTROLOGIXS XP4 CIRCUITS
ALSIP, IL M.P. DC-15.04

DESIGNED	DIGITIZED	CHECKED	DATE
GET/DLK	GET/SAT	GET/FAP	08-25-12

DESIGN DATE	REV. NO.	DRAWING	SHEET NO	FILE	SHEET
08-25-12	3	-----	-----	DC01504	C70

SITE SPECIFIC MDR DESCRIPTIONS AND SETTINGS																			
NAME		MDR1			MDR2			MDR3			MDR4			MDR5			MDR6		
FUNCTION		AX1			AX2			AX3			AX4			AX5			AX6		
WARNING TIME		60			60			NA			NA			NA			NA		
CW/MD		CW*			CW*			NA			NA			NA			NA		
AP TIME(PREEMPT)		NA			NA			NA			NA			NA			NA		
CWE-WT		80			80			NA			NA			NA			NA		
AUX RECOVERY DELAY		0			0			NA			NA			NA			NA		
TRACK		TK 1	TK 2	TK 3	TK 1	TK 2	TK 3	TK 1	TK 2	TK 3	TK 1	TK 2	TK 3	TK 1	TK 2	TK 3	TK 1	TK 2	TK 3
TRACK ASSIGNED		ASSIGNED	UNASSIGNED	UNASSIGNED	UNASSIGNED	ASSIGNED	UNASSIGNED	UNASSIGNED	UNASSIGNED	UNASSIGNED	UNASSIGNED	UNASSIGNED	UNASSIGNED	UNASSIGNED	UNASSIGNED	UNASSIGNED	UNASSIGNED	UNASSIGNED	UNASSIGNED
OFFSET DISTANCE		954'	NA	NA	NA	954'	NA	NA	NA	NA	NA	NA	NA	NA	NA	NA	NA	NA	NA
MD RESTART		0*	NA	NA	NA	0*	NA	NA	NA	NA	NA	NA	NA	NA	NA	NA	NA	NA	NA
SUDDEN SHUNT ZONE		0*	NA	NA	NA	0*	NA	NA	NA	NA	NA	NA	NA	NA	NA	NA	NA	NA	NA
POSITIVE START	PSEN	DISABLE	NA	NA	NA	DISABLE	NA	NA	NA	NA	NA	NA	NA	NA	NA	NA	NA	NA	NA
	PSRX	NA	NA	NA	NA	NA	NA	NA	NA	NA	NA	NA	NA	NA	NA	NA	NA	NA	NA
	PST	NA	NA	NA	NA	NA	NA	NA	NA	NA	NA	NA	NA	NA	NA	NA	NA	NA	NA
POST JOINT DETECT	PJEN	ENABLE	NA	NA	NA	ENABLE	NA	NA	NA	NA	NA	NA	NA	NA	NA	NA	NA	NA	NA
	PJRX	15	NA	NA	NA	15	NA	NA	NA	NA	NA	NA	NA	NA	NA	NA	NA	NA	NA
	PJDT	15	NA	NA	NA	15	NA	NA	NA	NA	NA	NA	NA	NA	NA	NA	NA	NA	NA
CLEAR JOINT LOS	CJ-LOS MODE	STANDARD	NA	NA	NA	STANDARD	NA	NA	NA	NA	NA	NA	NA	NA	NA	NA	NA	NA	NA
	CJ-LOS RX	15	NA	NA	30	15	NA	NA	NA	NA	NA	NA	NA	NA	NA	NA	NA	NA	NA
	CJ-LOS TIME	5	NA	NA	NA	5	NA	NA	NA	NA	NA	NA	NA	NA	NA	NA	NA	NA	NA

BASIC TRACK SETUP		
	TRACK 1	TRACK 2
FREQUENCY	86 HZ	86 HZ
MASTER/SLAVE	MASTER	SLAVE
RX ADJUST	100 *	100 *
TCA	*	*
DIRECTION MODE	UNI	UNI
LIA	*	*
ADVANCED APPROACH	*	*
NBS COMP RX	*	*
TRK ISLAND ASSIGN	NA	NA
APPROACH LENGTH	2956'	2956'
AUTO RX	ENABLE	ENABLE

ADVANCED TRACK SETUP			
		TRACK 1	TRACK 2
MOTION DET TIMER	MDEN	DISABLE	DISABLE
	MDTT	10 MIN	10 MIN
FALSE SHUNT	FSEN	DISABLE	DISABLE
	FSRX	NA	NA
	FST	NA	NA
APPROACH RELEASE	AREN	DISABLE	DISABLE
	ARRX	NA	NA
	ART	NA	NA
LOS TIME		16 SEC	16 SEC
IJ-LOS TIME		5 SEC	5 SEC
NRML*SHRT*VRYSHRT		*	*

ISLAND SETUP (NOT USED)		
	TRACK 1	TRACK 2
ENABLE/DISABLE	DISABLE	DISABLE
FREQUENCY	X.X KHZ	X.X KHZ
LOSS OF SHUNT	2 SEC.	2 SEC.
FAULT DELAY	1 OR 2	1 OR 2

VPM3 ETHERNET SETUP	
	IP ADDRESS
ETHERNET PORT 1 (TOP)	192.168.0.11
ETHERNET PORT 2 (BOTTOM)	10.200.1.109

NOTES:
* = FIELD ADJUSTMENT
NA = NOT APPLICABLE

REMOTE CROSSING (47CWU)
6'X 6' HOUSE

FIELD SET
06/11/13

NEW WORK

GE TRANSPORTATION
INTELLIGENT CONTROL SYSTEMS
Jacksonville, Florida
CSX PROJ #:IL2011037A DATE:01-29-13
DESIGNED BY:SAT CHECKED BY:DPL

C4R-3.C02
REV. 02-29-12

CSX TRANSPORTATION
RAIL TRANSPORT GROUP ENGINEERING
COMMUNICATIONS AND SIGNALS

B.I. JUNCTION
BROADWAY ST. (163416P)
XP4 47CWU MODULE SETUP INFORMATION
ALSIP, IL M.P. DC-15.04

DESIGNED	DIGITIZED	CHECKED	DATE
GET/DLK	GET/SAT	GET/FAP	08-25-12

DESIGN DATE	REV. NO.	DRAWING	SHEET NO	FILE	SHEET
08-25-12	3	-----	-----	DC01504	C71

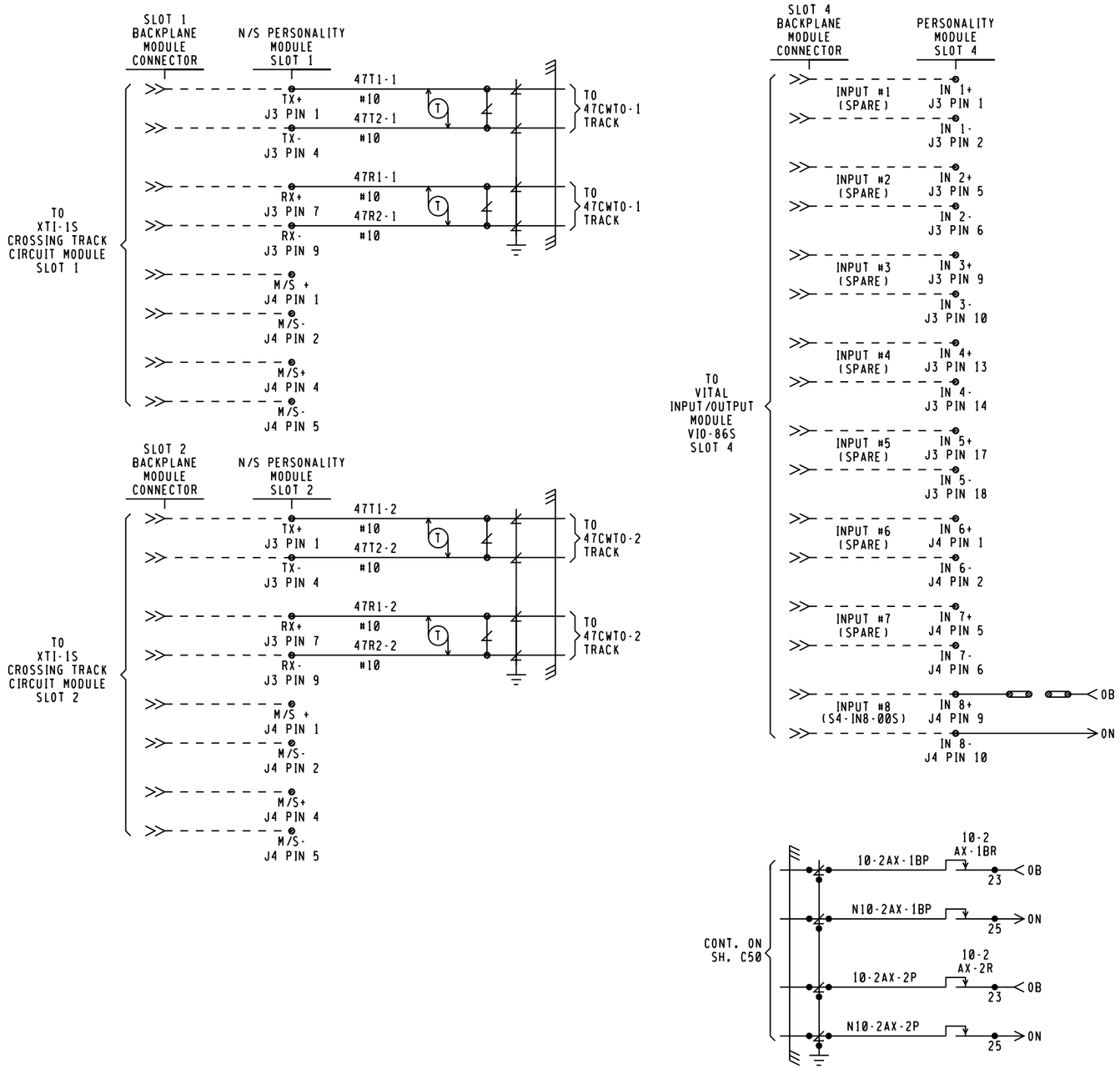

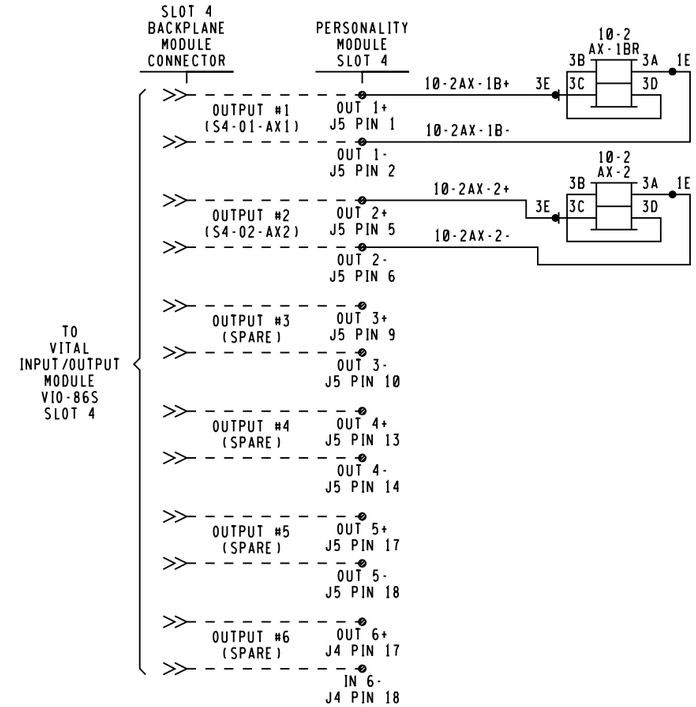

NOTES
1. ALL WIRE THIS SHEET #16 AWG UNLESS NOTED.
2. APPROACH DISABLE JUMPER INPUT. THIS INPUT IS USED IN COMBINATION WITH THE SOFT APPROACH DISABLE ACCESSED THROUGH THE CDU-1 KEYPAD. BOTH BITS MUST BE HIGH TO DISABLE AN APPROACH. THE OPERATOR IS SOLELY RESPONSIBLE FOR CROSSING PROTECTION WHEN THE APPROACH DISABLE FUNCTION IS ACTIVATED.

REMOTE CROSSING (47CWU)
6'X 6' HOUSE

FIELD SET
03/19/13

NEW WORK

GE TRANSPORTATION
INTELLIGENT CONTROL SYSTEMS
Jacksonville, Florida
CSX PROJ #,IL2011037A DATE,01-29-13
DESIGNED BY,SAT CHECKED BY,DPL

C4R-3.C01
REV. 12-12-11

CSX TRANSPORTATION
RAIL TRANSPORT GROUP ENGINEERING
COMMUNICATIONS AND SIGNALS

B.I. JUNCTION
BROADWAY ST. (163416P)
XP4 47CWU MODULE CONNECTOR USAGE
ALSIP, IL M.P. DC-15.04

DESIGNED	DIGITIZED	CHECKED	DATE
GET/DLK	GET/SAT	GET/FAP	08-25-12

DESIGN DATE	REV. NO.	DRAWING	SHEET NO	FILE	SHEET
08-25-12	3	-----	-----	DC01504	C72