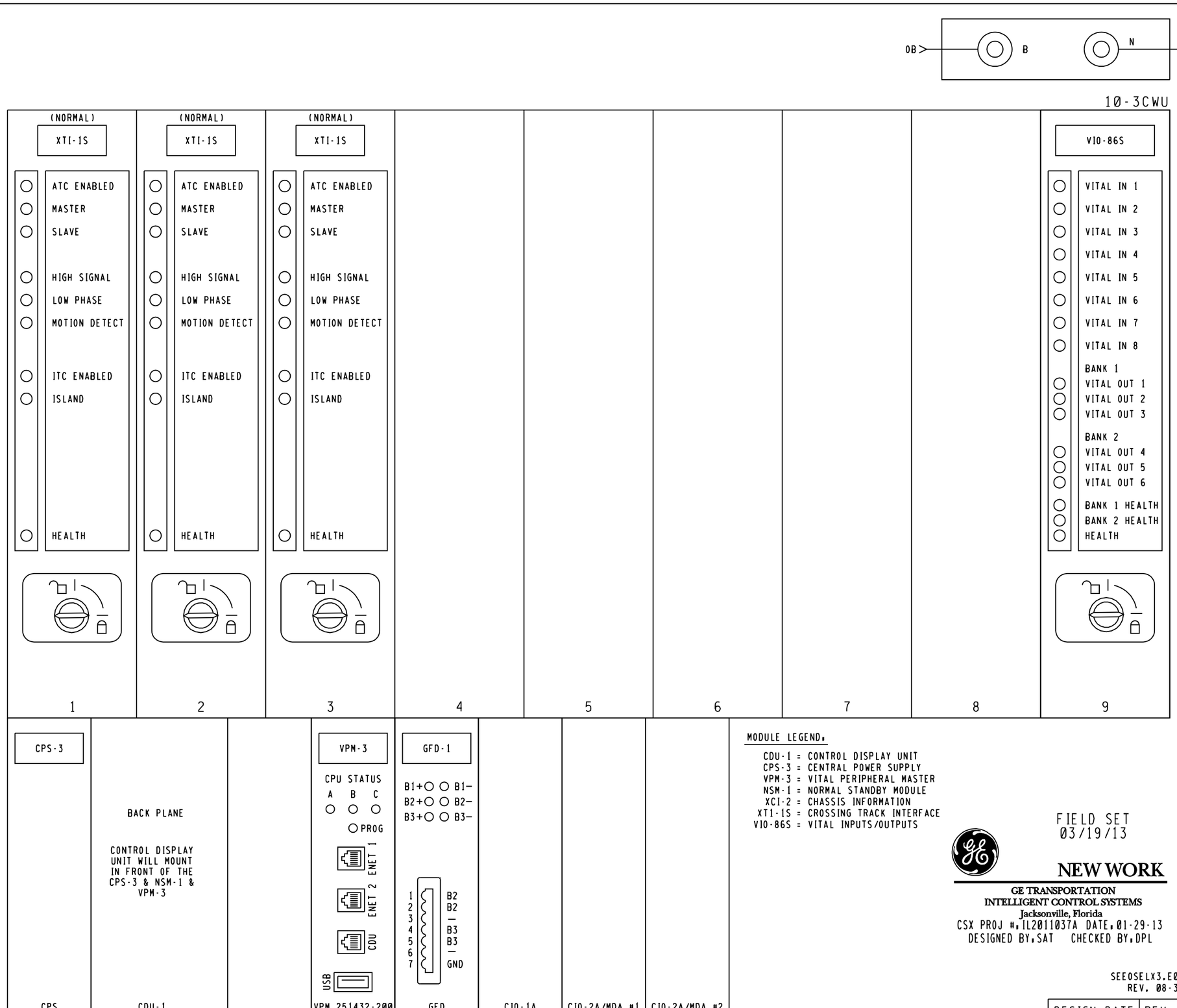

FIELD SET
03/19/13

NEW WORK

GE TRANSPORTATION
INTELLIGENT CONTROL SYSTEMS
Jacksonville, Florida
CSX PROJ #.IL2011037A DATE.01-29-13
DESIGNED BY.SAT CHECKED BY.DPL

LOCATION F CROSSING (10-3CWU)

CSX TRANSPORTATION
RAIL TRANSPORT GROUP ENGINEERING
COMMUNICATIONS AND SIGNALS

B.I. JUNCTION
BROADWAY ST. (163416P)
ELECTROLOGIXS MODULE XP4 CONFIGURATION
ALSIP, IL M.P. DC-15.04

SEE0SELX3.E04WCM
REV. 08-31-10

DESIGN DATE	REV. NO.	DRAWING	SHEET NO	FILE	SHEET
01-29-13	4	-----	-----	DC01504	E18 (X)

DESIGNED	DIGITIZED	CHECKED	DATE
GET/SAT	GET/SAT	GET/DPL	01-29-13

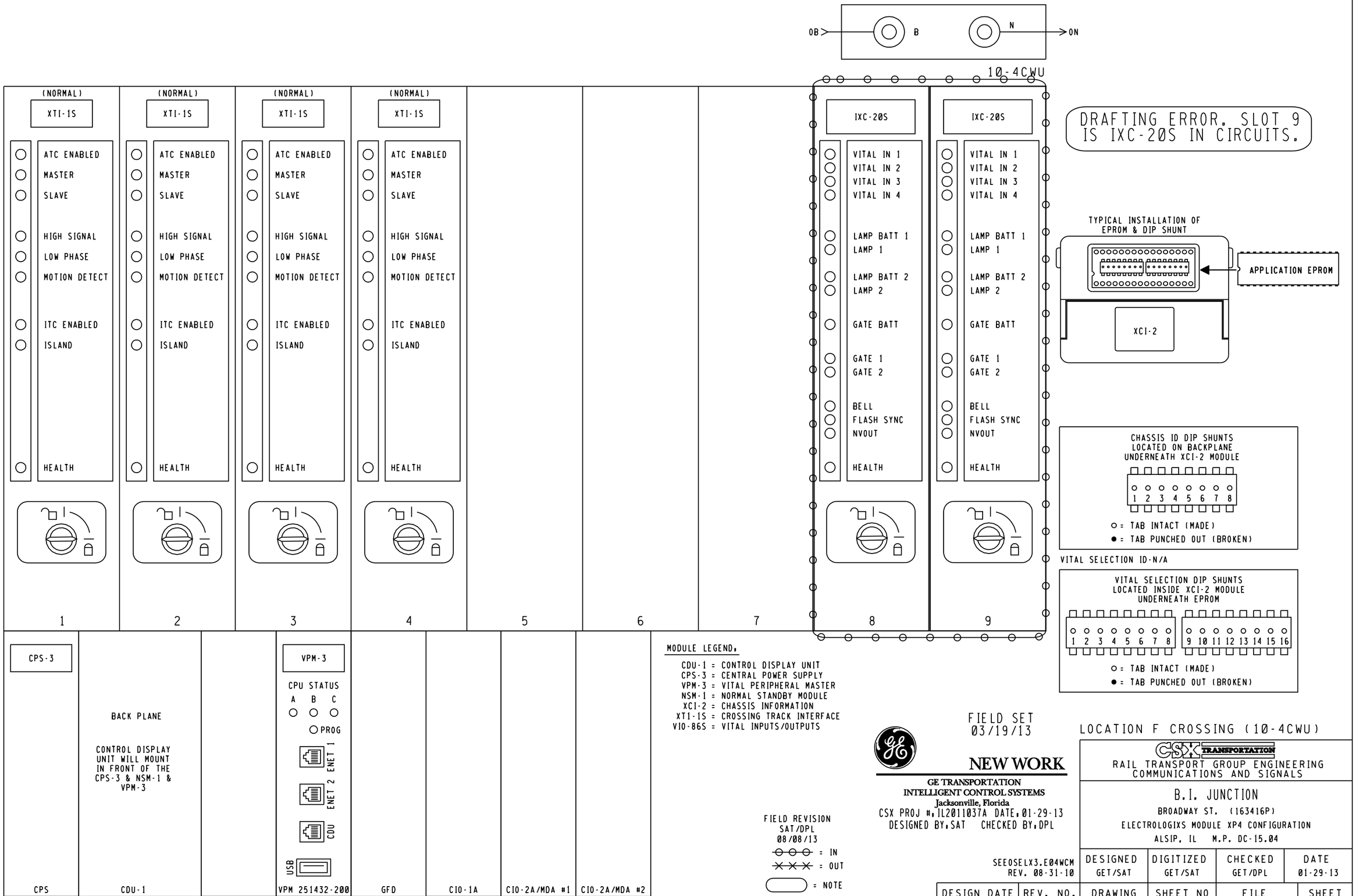
OB
B
N
ON
10-4CWU
(NORMAL)
XTI-1S
ATC ENABLED
MASTER
SLAVE
HIGH SIGNAL
LOW PHASE
MOTION DETECT
ITC ENABLED
ISLAND
HEALTH
1
2
3
4
5
6
7
8
9
IXC-20S
VITAL IN 1
VITAL IN 2
VITAL IN 3
VITAL IN 4
LAMP BATT 1
LAMP 1
LAMP BATT 2
LAMP 2
GATE BATT
GATE 1
GATE 2
BELL
FLASH SYNC
NVOUT
DRAFTING ERROR. SLOT 9 IS IXC-20S IN CIRCUITS.
TYPICAL INSTALLATION OF EPROM & DIP SHUNT
APPLICATION EPROM
XCI-2
CHASSIS ID DIP SHUNTS LOCATED ON BACKPLANE UNDERNEATH XCI-2 MODULE
1 2 3 4 5 6 7 8
○ = TAB INTACT (MADE)
● = TAB PUNCHED OUT (BROKEN)
VITAL SELECTION ID-N/A
VITAL SELECTION DIP SHUNTS LOCATED INSIDE XCI-2 MODULE UNDERNEATH EPROM
1 2 3 4 5 6 7 8
9 10 11 12 13 14 15 16
○ = TAB INTACT (MADE)
● = TAB PUNCHED OUT (BROKEN)
CPS-3
CPS
BACK PLANE
CONTROL DISPLAY UNIT WILL MOUNT IN FRONT OF THE CPS-3 & NSM-1 & VPM-3
CDU-1
VPM-3
CPU STATUS
A B C
PROG
ENET 1
ENET 2
CDU
USB
VPM 251432-200
GFD
CIO-1A
CIO-2A/MDA #1
CIO-2A/MDA #2
MODULE LEGEND:
CDU-1 = CONTROL DISPLAY UNIT
CPS-3 = CENTRAL POWER SUPPLY
VPM-3 = VITAL PERIPHERAL MASTER
NSM-1 = NORMAL STANDBY MODULE
XCI-2 = CHASSIS INFORMATION
XTI-1S = CROSSING TRACK INTERFACE
VIO-86S = VITAL INPUTS/OUTPUTS
FIELD REVISION
SAT/DPL
08/08/13
= IN
= OUT
= NOTE
FIELD SET
03/19/13
NEW WORK
GE TRANSPORTATION
INTELLIGENT CONTROL SYSTEMS
Jacksonville, Florida
CSX PROJ #:1L2011037A DATE:01-29-13
DESIGNED BY:SAT CHECKED BY:DPL
LOCATION F CROSSING (10-4CWU)
CSX TRANSPORTATION
RAIL TRANSPORT GROUP ENGINEERING
COMMUNICATIONS AND SIGNALS
B.I. JUNCTION
BROADWAY ST. (163416P)
ELECTROLOGIXS MODULE XP4 CONFIGURATION
ALSIP, IL M.P. DC-15.04
SEEOSELX3.E04WCM
REV. 08-31-10
DESIGNED GET/SAT
DIGITIZED GET/SAT
CHECKED GET/DPL
DATE 01-29-13
DESIGN DATE 01-29-13
REV. NO. 4
DRAWING -----
SHEET NO -----
FILE DC01504
SHEET E19 X

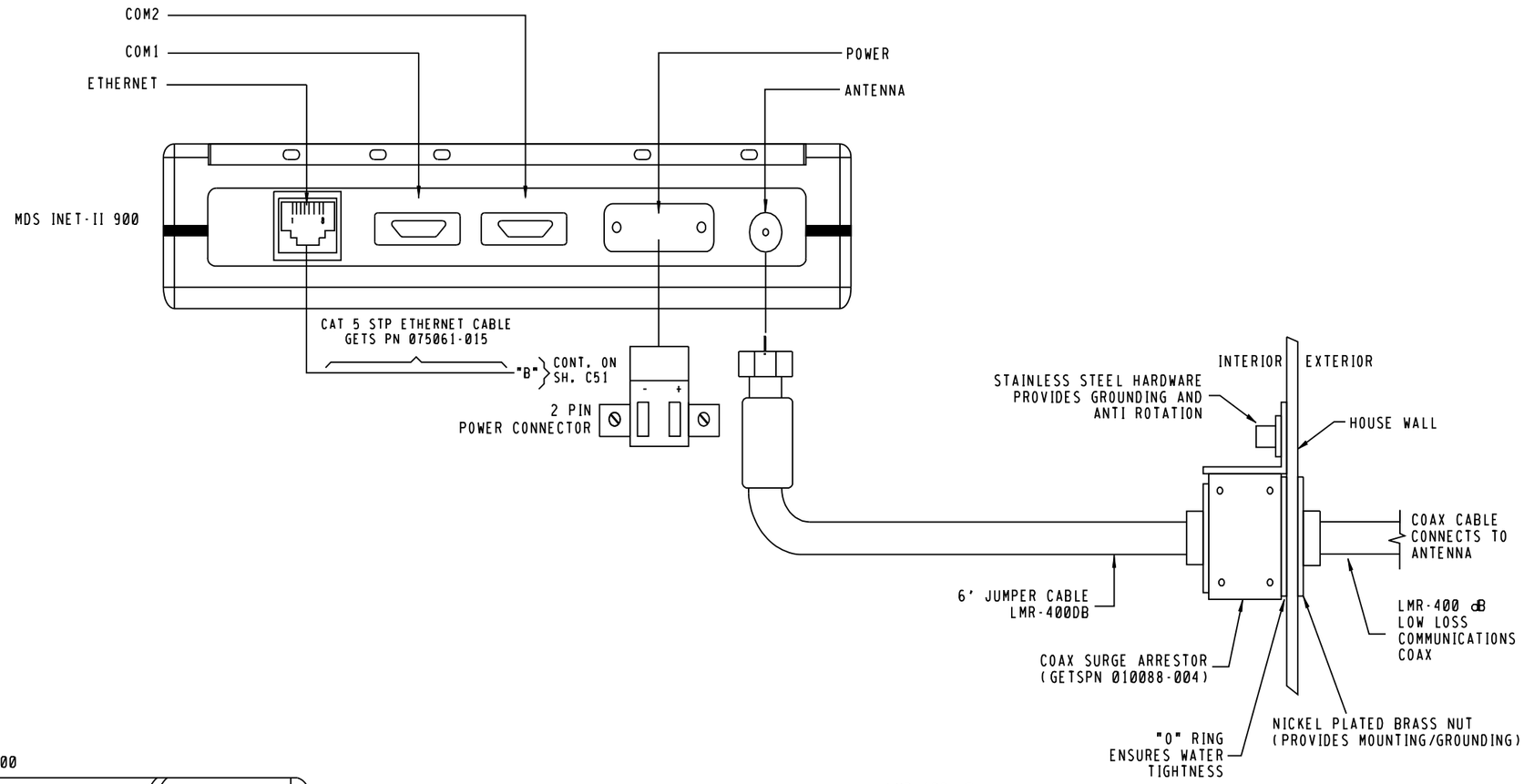

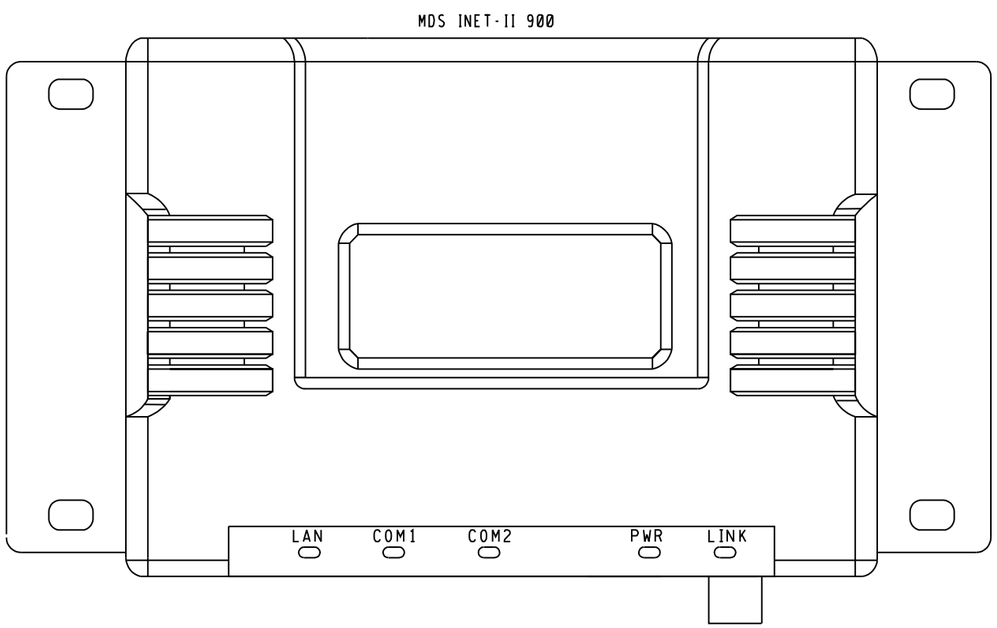

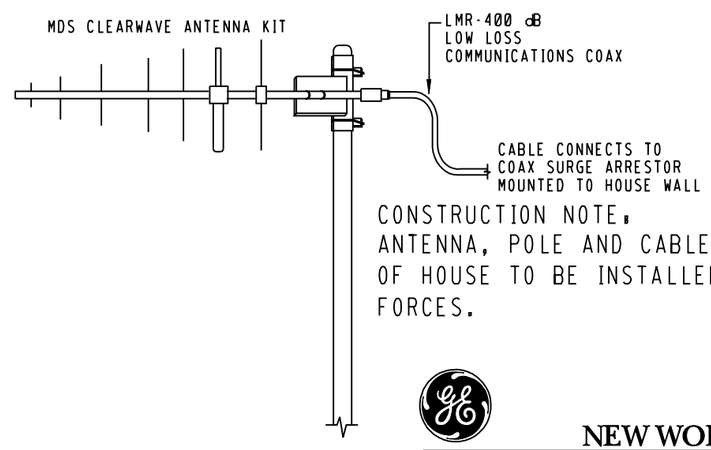

CONSTRUCTION NOTE:
ANTENNA, POLE AND CABLE TO OUTSIDE OF HOUSE TO BE INSTALLED BY FIELD FORCES.

LOCATION F CROSSING (10-4CWU)

NEW WORK

GE TRANSPORTATION - RAIL
TRAIN CONTROL SYSTEMS
Jacksonville, Florida

CSX PROJ #: IL2011037 DATE: 08-25-12
DESIGNED BY: DLK CHECKED BY: FAP

DX0ELX3.E07
REV. 05-31-09

CSX TRANSPORTATION
RAIL TRANSPORT GROUP ENGINEERING
COMMUNICATIONS AND SIGNALS

B.I. JUNCTION
BROADWAY ST. (163416P)
ACCESS POINT INET-II 900 RADIO DETAILS
ALSIP, IL M.P. DC-15.04

DESIGNED	DIGITIZED	CHECKED	DATE
GET/DLK	GET/SAT	GET/DPL	08-25-12

DESIGN DATE	REV. NO.	DRAWING	SHEET NO	FILE	SHEET
08-25-12	3	-----	-----	DC01504	E20

TOP ROW

POR		
12	FB	
15	FB	B62
22	FB	C30
25	FB	
32	F	
35		

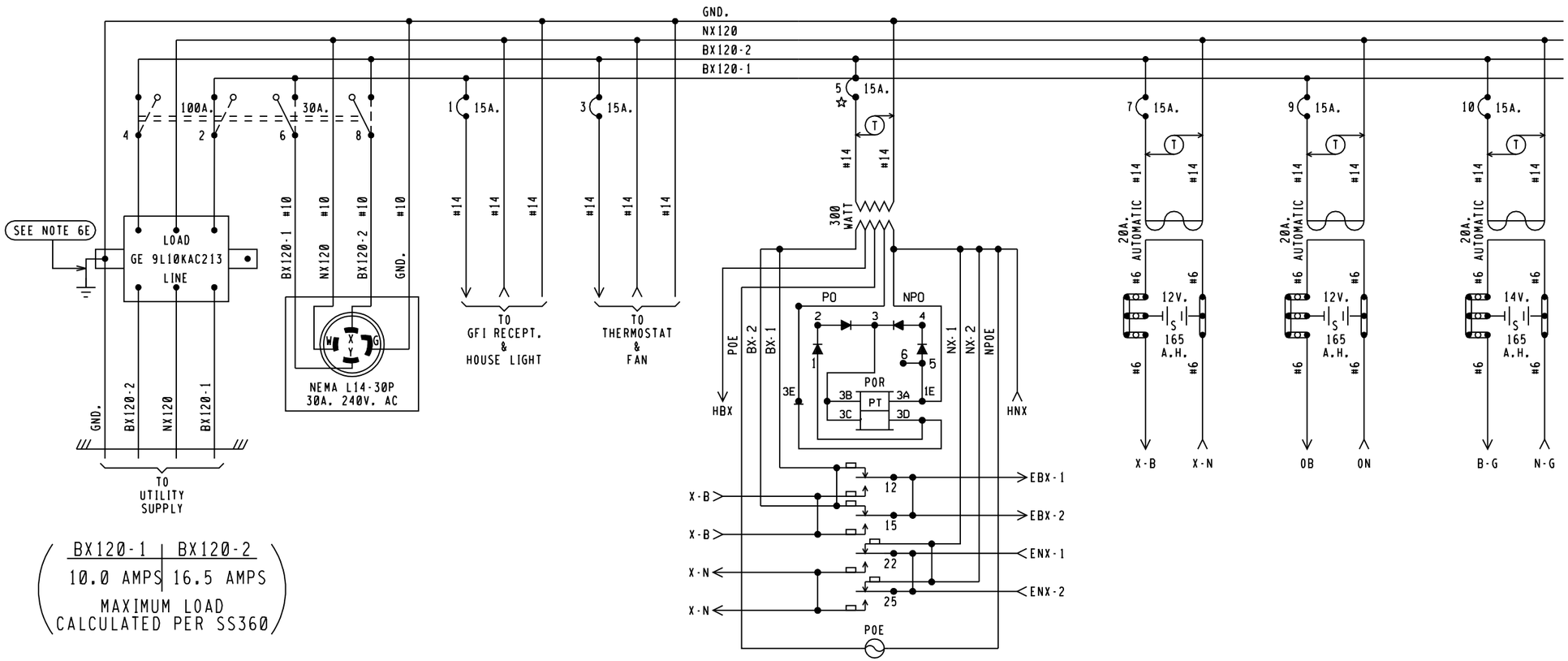

BX120-1	BX120-2
10.0 AMPS	16.5 AMPS

MAXIMUM LOAD
CALCULATED PER SS360

NOTES:

1 - REFERENCES ARE PER SCMS-13.
2 - ARRESTERS ARE PER SS382.
3 - SHELF RELAY PLACEMENT ON CONSIST CHART HAS NO SIGNIFICANCE.
4 - PLUG-IN RELAYS ARE VIEWED FROM THE FRONT OF RACK.
5 - BATTERY A.H. CAPACITY SHOWN IS THE MINIMUM REQUIREMENT.
6 - WIRING
  A - FEED TO ALL BUSSES, LIGHT CIRCUITS,MOTOR CIRCUITS TO BE #10 FLEX.
  B - 120-VOLT FEED FROM ENTRANCE TO POWER BUSS TO BE #10 FLEX.
  C - ALL TRACK WIRES TO BE #10 FLEX.
  D - ALL OTHERS TO BE #16 FLEX UNLESS NOTED.
  E - GROUND WIRE NOT NECESSARY WHEN GE ARRESTER IS MOUNTED ON GROUND PLANE OR METAL ENCLOSURE AFFIXED DIRECTLY TO BUNGALOW METALLIC STRUCTURAL MEMBER.
7 - CIRCUIT INTERRUPTERS 2 & 4 ARE MECHANICALLY INTERLOCKED WITH CIRCUIT INTERRUPTERS 6 & 8.

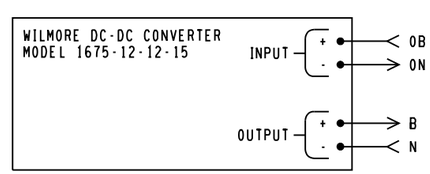

= NOTE

NEW WORK

GE TRANSPORTATION
INTELLIGENT CONTROL SYSTEMS
Jacksonville, Florida
CSX PROJ #,IL2011037 DATE,08-25-12
DESIGNED BY,DLK CHECKED BY,FAP

XP4.E01
REV. 03-21-12

LOCATION G CROSSING (10-5CWU)
6'X6' HOUSE
W/ FARADAY SHIELD

CSX TRANSPORTATION
RAIL TRANSPORT GROUP ENGINEERING
COMMUNICATIONS AND SIGNALS

B.I. JUNCTION
BROADWAY ST. (163416P)
POWER DISTRIBUTION
ALSIP, IL M.P. DC-15.04

DESIGNED	DIGITIZED	CHECKED	DATE
GET/DLK	GET/SAT	GET/FAP	08-25-12

DESIGN DATE	REV. NO.	DRAWING	SHEET NO	FILE	SHEET
08-25-12	3	-----	-----	DC01504	E21

10-5CWU

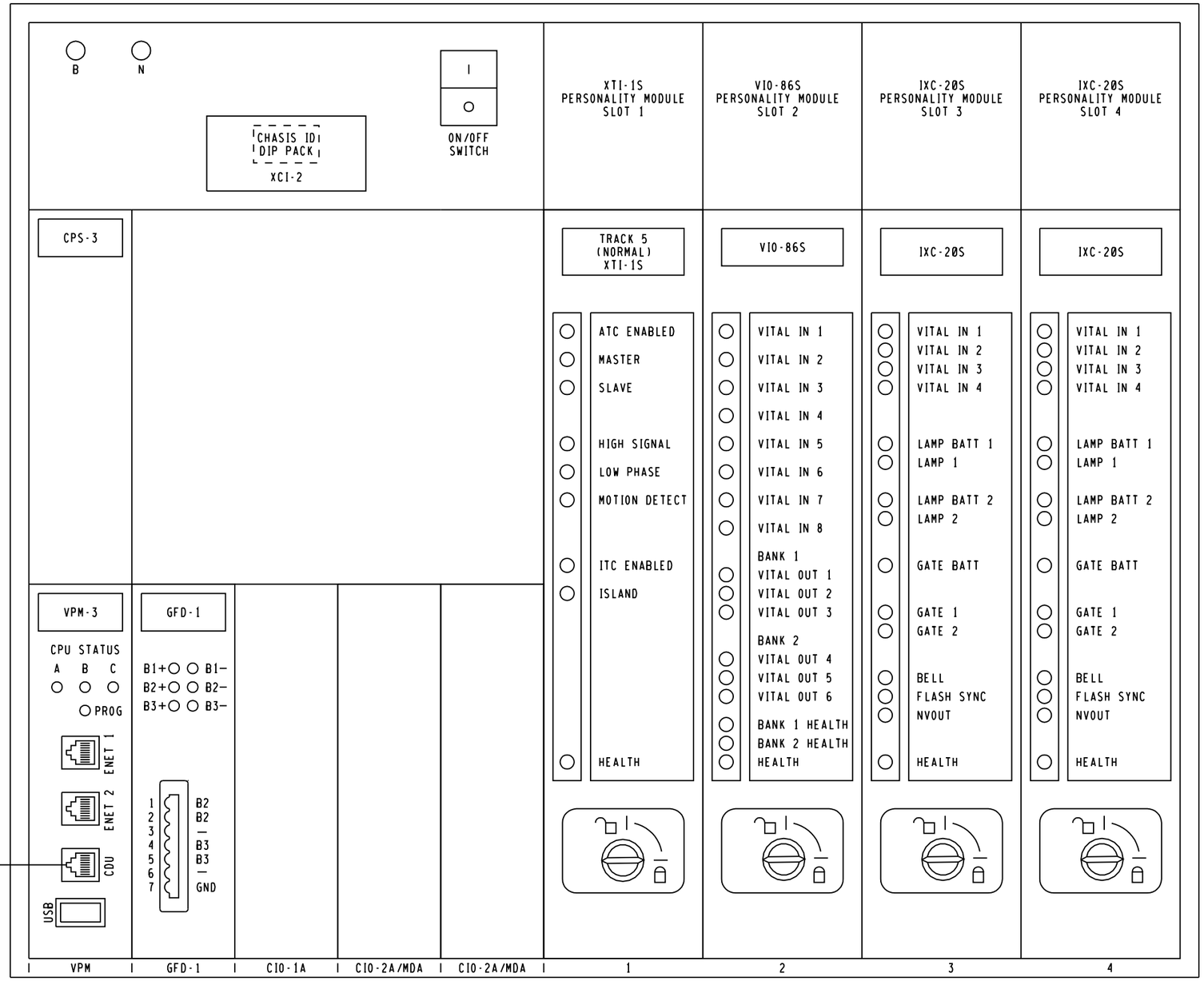

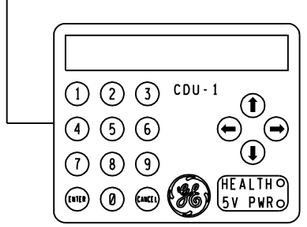

MODULE LEGEND:

CDU-1 = CONTROL DISPLAY UNIT
CPS-3 = CENTRAL POWER SUPPLY
VPM-3 = VITAL PERIPHERAL MASTER
GFD-1 = GROUND FAULT DETECTOR
CIO-1A = COMMUNICATION INPUT/OUTPUT
CIO-2A = COMMUNICATION INPUT/OUTPUT
CIO-MDA = COMMUNICATION INPUT/OUTPUT
XCI-2 = CHASSIS INFORMATION
VLD-R16S = VITAL LAMP DRIVER
VIO-86S = VITAL INPUTS/OUTPUTS

TYPICAL INSTALLATION OF EPROM & DIP SHUNT

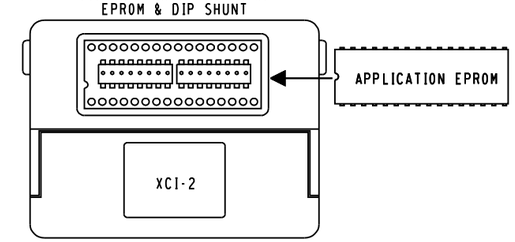

PROGRAM NAME:

CHASSIS ID:

CHASSIS ID DIP SHUNTS LOCATED ON BACKPLANE UNDERNEATH XCI-2 MODULE

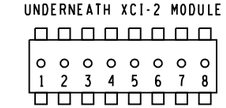

○ = TAB INTACT (MADE)
● = TAB PUNCHED OUT (BROKEN)

VITAL SELECTION ID-N/A

VITAL SELECTION DIP SHUNTS LOCATED INSIDE XCI-2 MODULE UNDERNEATH EPROM

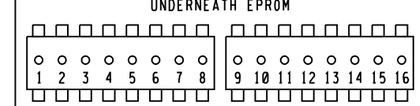

○ = TAB INTACT (MADE)
● = TAB PUNCHED OUT (BROKEN)

LOCATION G CROSSING (10-5CWU)
6'X6' HOUSE

NEW WORK

GE TRANSPORTATION
INTELLIGENT CONTROL SYSTEMS
Jacksonville, Florida

CSX PROJ #:IL2011037 DATE:08-25-12
DESIGNED BY:DLK CHECKED BY:FAP

SEEOSELX3.E04WCM
REV. 08-31-10

CSX TRANSPORTATION
RAIL TRANSPORT GROUP ENGINEERING
COMMUNICATIONS AND SIGNALS

B.I. JUNCTION
BROADWAY ST. (163416P)
ELECTROLOGIXS MODULE XP4 CONFIGURATION
ALSIP, IL M.P. DC-15.04

DESIGNED	DIGITIZED	CHECKED	DATE
GET/DLK	GET/SAT	GET/FAP	08-25-12

DESIGN DATE	REV. NO.	DRAWING	SHEET NO	FILE	SHEET
08-25-12	3	-----	-----	DC01504	E22

TOP ROW

90-1AXR			90-2AXR			10-1AX-2R			10-2AX-1AR			60-1AXR			60-2AXR		
12	F		12	F		12			12			12			12		
15	F	B8	15	F	B8	15		B8	15		B8	15		B8	15		B8
22		C30	22		C30	22		C30	22		C30	22		C30	22		C30
23			23			23	F		23	F		23	F		23	F	
25			25			25	F		25	F		25	F		25	F	
32			32			32			32			32			32		
35			35			35			35			35			35		

POKR			
9		11	N68
10	F	12	C48

WALL MOUNTED

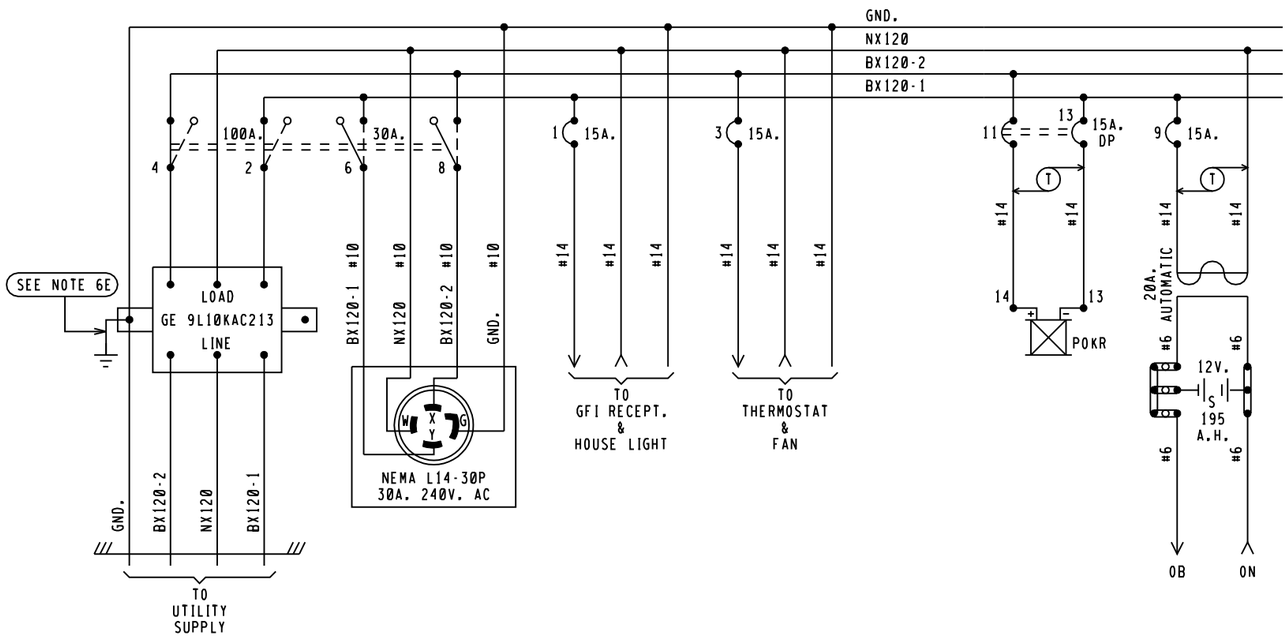

BX120-1	BX120-2
10.0 AMPS	2.0 AMPS

MAXIMUM LOAD
CALCULATED PER SS360

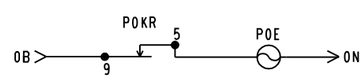

NOTES:

1 - REFERENCES ARE PER SCMS-13.
2 - ARRESTERS ARE PER SS382.
3 - SHELF RELAY PLACEMENT ON CONSIST CHART HAS NO SIGNIFICANCE.
4 - PLUG-IN RELAYS ARE VIEWED FROM THE FRONT OF RACK.
5 - BATTERY A.H. CAPACITY SHOWN IS THE MINIMUM REQUIREMENT.
6 - WIRING
  A - FEED TO ALL BUSSES, LIGHT CIRCUITS,MOTOR CIRCUITS TO BE #10 FLEX.
  B - 120-VOLT FEED FROM ENTRANCE TO POWER BUSS TO BE #10 FLEX.
  C - ALL TRACK WIRES TO BE #10 FLEX.
  D - ALL OTHERS TO BE #16 FLEX UNLESS NOTED.
  E - GROUND WIRE NOT NECESSARY WHEN GE ARRESTER IS MOUNTED ON GROUND PLANE OR METAL ENCLOSURE AFFIXED DIRECTLY TO BUNGALOW METALLIC STRUCTURAL MEMBER.
7 - CIRCUIT INTERRUPTERS 2 & 4 ARE MECHANICALLY INTERLOCKED WITH CIRCUIT INTERRUPTERS 6 & 8.

FIELD SET
03/19/13

NEW WORK

GE TRANSPORTATION
INTELLIGENT CONTROL SYSTEMS
Jacksonville, Florida
CSX PROJ #,IL2011037A DATE,01-29-13
DESIGNED BY,SAT CHECKED BY,DPL

REMOTE CROSSING HOUSE XP4-90CWU
6'X 6' RELAY HOUSE
W/FARADAY SHIELD

CSX TRANSPORTATION
RAIL TRANSPORT GROUP ENGINEERING
COMMUNICATIONS AND SIGNALS

B.I. JUNCTION
BROADWAY ST. (163416P)
POWER DISTRIBUTION
ALSIP, IL M.P. DC-15.04

XP4.E01
REV. 03-21-12

DESIGNED	DIGITIZED	CHECKED	DATE
GET/DLK	GET/SAT	GET/FAP	08-25-12

DESIGN DATE	REV. NO.	DRAWING	SHEET NO	FILE	SHEET
08-25-12	3	-----	-----	DC01504	E23

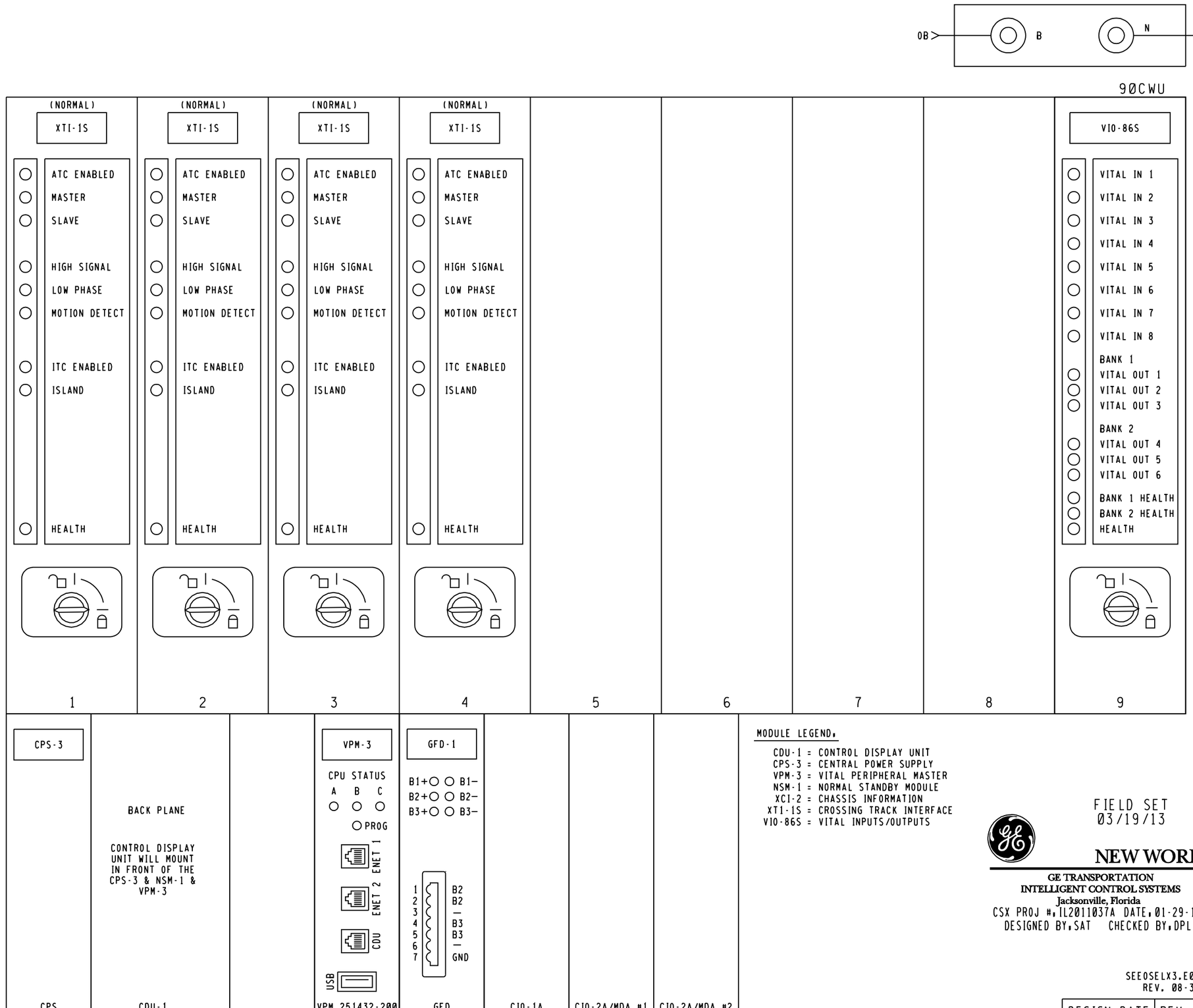

FIELD SET
03/19/13

NEW WORK

GE TRANSPORTATION
INTELLIGENT CONTROL SYSTEMS
Jacksonville, Florida
CSX PROJ #:IL2011037A DATE:01-29-13
DESIGNED BY:SAT CHECKED BY:DPL

REMOTE CROSSING HOUSE XP4-90CWU

CSX TRANSPORTATION
RAIL TRANSPORT GROUP ENGINEERING
COMMUNICATIONS AND SIGNALS

B.I. JUNCTION
BROADWAY ST. (163416P)
ELECTROLOGIXS MODULE XP4 CONFIGURATION
ALSIP, IL M.P. DC-15.04

SEE0SELX3.E04WCM
REV. 08-31-10

DESIGNED	DIGITIZED	CHECKED	DATE
GET/SAT	GET/SAT	GET/DPL	01-29-13

DESIGN DATE	REV. NO.	DRAWING	SHEET NO	FILE	SHEET
01-29-13	4	-----	-----	DC01504	E24 (X)

TOP ROW

10-1AX-2R			10-2AX-1AR		
12			12		
15		B8	15		B8
22		C30	22		C30
23	F		23	F	
25	F		25	F	
32			32		
35			35		

POKR				
9		11	F	N68
10	F	12		C48

WALL MOUNTED

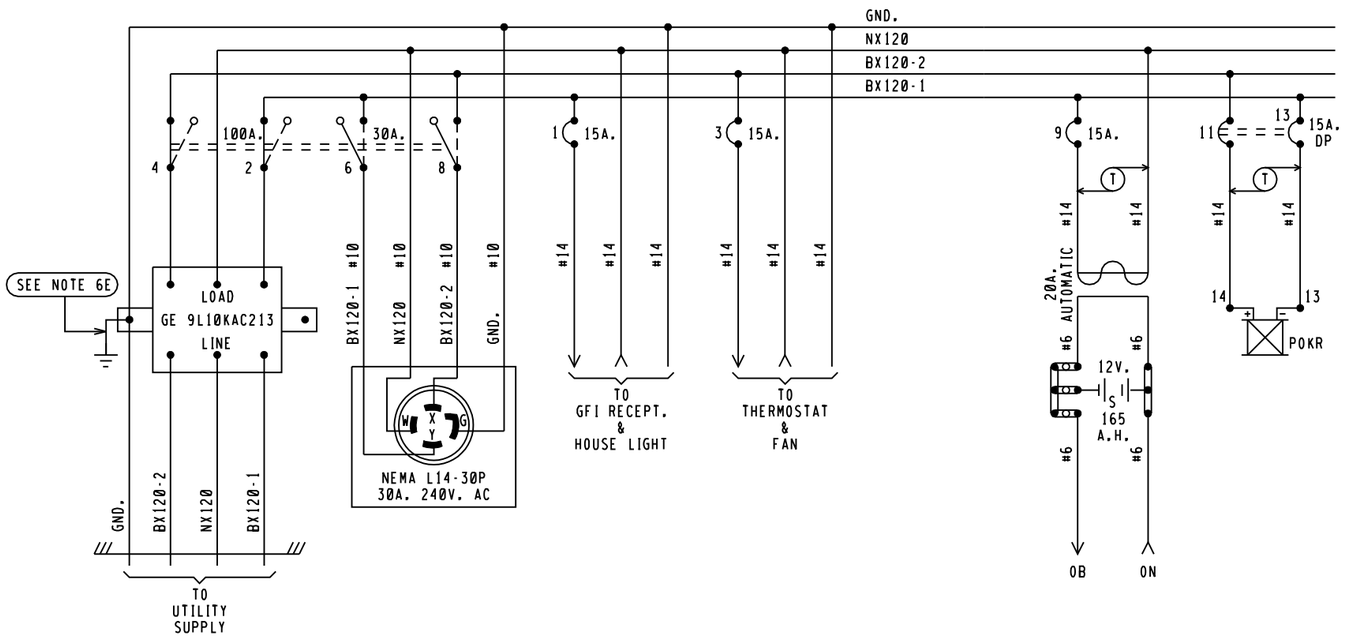

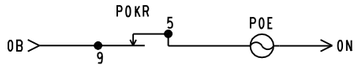

BX120-1	BX120-2
10.0 AMPS	4.5 AMPS

MAXIMUM LOAD
CALCULATED PER SS360

NOTES:

1 - REFERENCES ARE PER SCMS-13.
2 - ARRESTERS ARE PER SS382.
3 - SHELF RELAY PLACEMENT ON CONSIST CHART HAS NO SIGNIFICANCE.
4 - PLUG-IN RELAYS ARE VIEWED FROM THE FRONT OF RACK.
5 - BATTERY A.H. CAPACITY SHOWN IS THE MINIMUM REQUIREMENT.
6 - WIRING
  A - FEED TO ALL BUSSES, LIGHT CIRCUITS,MOTOR CIRCUITS TO BE #10 FLEX.
  B - 120-VOLT FEED FROM ENTRANCE TO POWER BUSS TO BE #10 FLEX.
  C - ALL TRACK WIRES TO BE #10 FLEX.
  D - ALL OTHERS TO BE #16 FLEX UNLESS NOTED.
  E - GROUND WIRE NOT NECESSARY WHEN GE ARRESTER IS MOUNTED ON GROUND PLANE OR METAL ENCLOSURE AFFIXED DIRECTLY TO BUNGALOW METALLIC STRUCTURAL MEMBER.
7 - CIRCUIT INTERRUPTERS 2 & 4 ARE MECHANICALLY INTERLOCKED WITH CIRCUIT INTERRUPTERS 6 & 8.

FIELD SET
03/19/13

NEW WORK

GE TRANSPORTATION
INTELLIGENT CONTROL SYSTEMS
Jacksonville, Florida
CSX PROJ #: IL2011037A DATE: 01-29-13
DESIGNED BY: SAT CHECKED BY: DPL

XP4.E01
REV. 03-21-12

REMOTE CROSSING (47CWU)
6'X 6' HOUSE
W/FARADAY SHIELD

CSX TRANSPORTATION
RAIL TRANSPORT GROUP ENGINEERING
COMMUNICATIONS AND SIGNALS

B.I. JUNCTION
BROADWAY ST. (163416P)
POWER DISTRIBUTION
ALSIP, IL M.P. DC-15.04

DESIGNED	DIGITIZED	CHECKED	DATE
GET/DLK	GET/SAT	GET/FAP	08-25-12

DESIGN DATE	REV. NO.	DRAWING	SHEET NO	FILE	SHEET
08-25-12	3	-----	-----	DC01504	E25

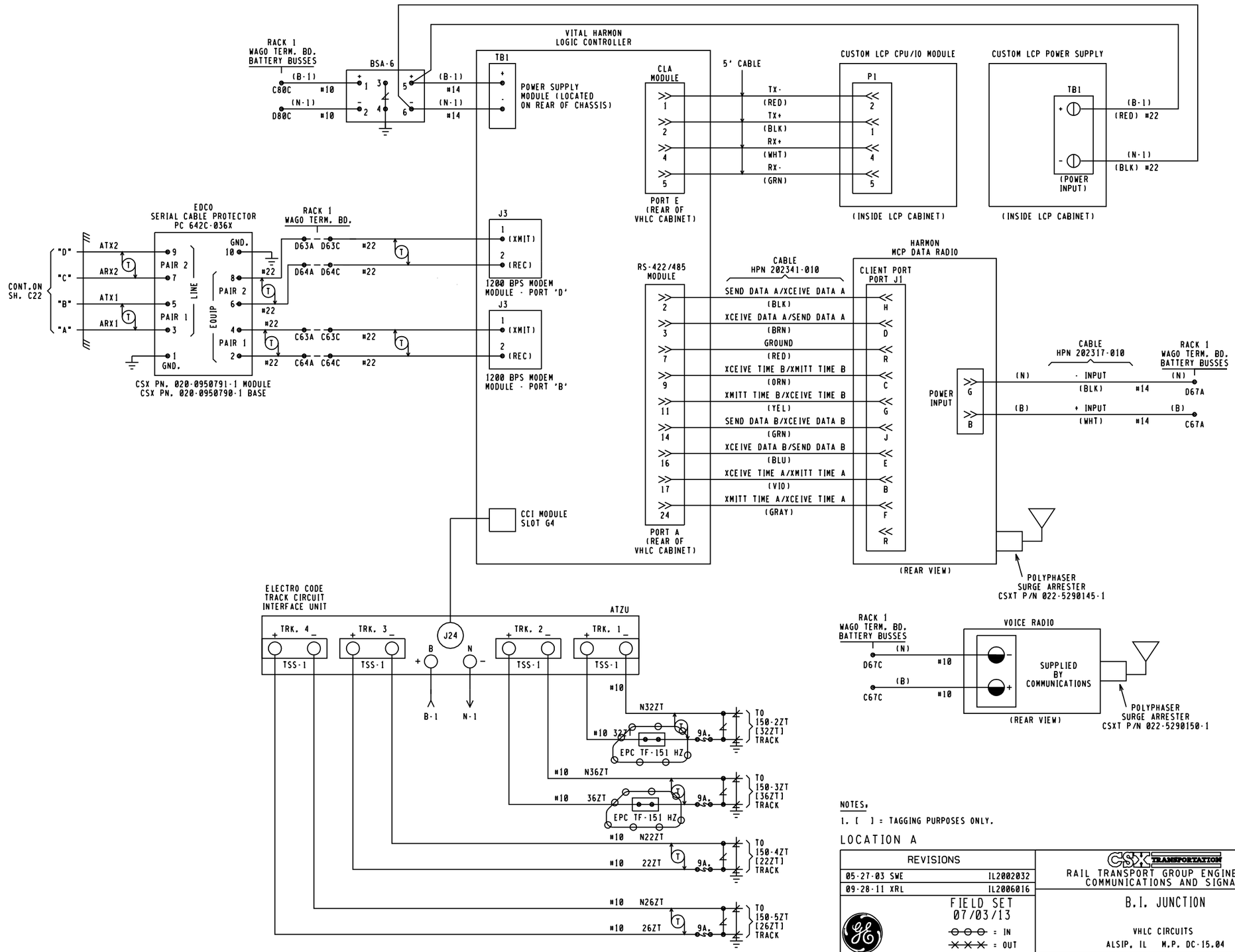

NOTES:

1. [ ] = TAGGING PURPOSES ONLY.

LOCATION A

REVISIONS	
05-27-03 SWE	IL2002032
09-28-11 XRL	IL2006016

FIELD SET
07/03/13
⊖⊖⊖ = IN
✕✕✕ = OUT

GE TRANSPORTATION
INTELLIGENT CONTROL SYSTEMS
Jacksonville, Florida
CSX PROJ #:IL2011037A DATE:07-03-13
DESIGNED BY:SAT CHECKED BY:DPL

CSX TRANSPORTATION
RAIL TRANSPORT GROUP ENGINEERING
COMMUNICATIONS AND SIGNALS

B.I. JUNCTION

VHLC CIRCUITS
ALSIP, IL M.P. DC-15.04

DESIGNED	DIGITIZED	CHECKED	DATE
SWE/STL	SWE/WLA	SWE/MJH/JLM	10-14-02

NEXT FILE	NEXT SH	FILE	SHEET
DC01504	C02	DC01504	C01

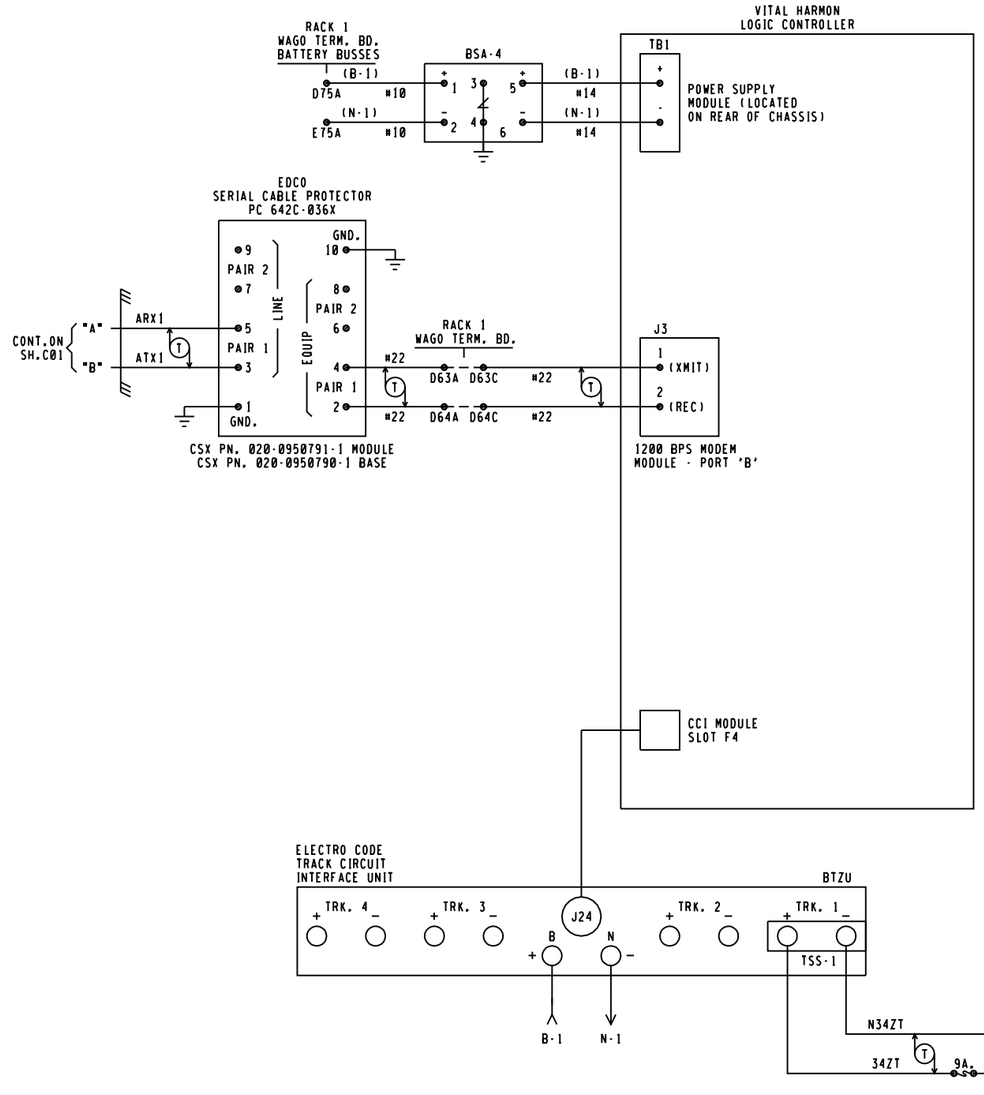

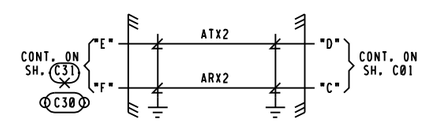

: IN
: OUT

NOTES:

1. [ ] = TAGGING PURPOSES ONLY.

GE TRANSPORTATION
INTELLIGENT CONTROL SYSTEMS
Jacksonville, Florida
CSX PROJ #:IL2011037 DATE:08-25-12
DESIGNED BY:DLK CHECKED BY:FAP

LOCATION B

REVISIONS	
05-27-03 SWE	IL2002032
09-28-11 XRL	IL2006016

CSX TRANSPORTATION
RAIL TRANSPORT GROUP ENGINEERING
COMMUNICATIONS AND SIGNALS

B.I. JUNCTION

VHLC CIRCUITS
ALSIP, IL M.P. DC-15.04

DESIGNED	DIGITIZED	CHECKED	DATE
SWE/STL	SWE/CCV	SWE/MJH/JLM	10-14-02

NEXT FILE	NEXT SH	FILE	SHEET
DC01504	C23	DC01504	C22

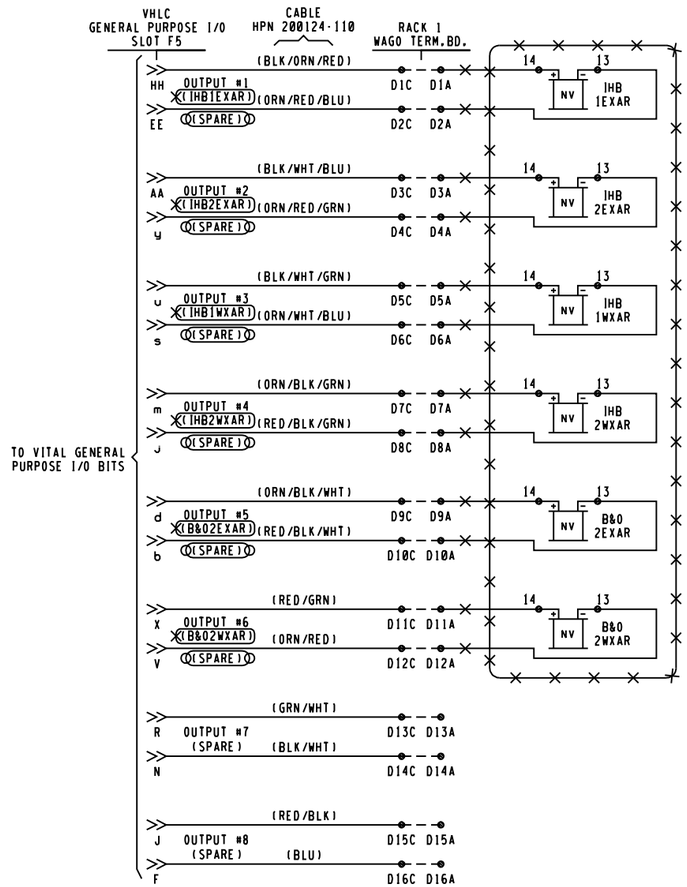

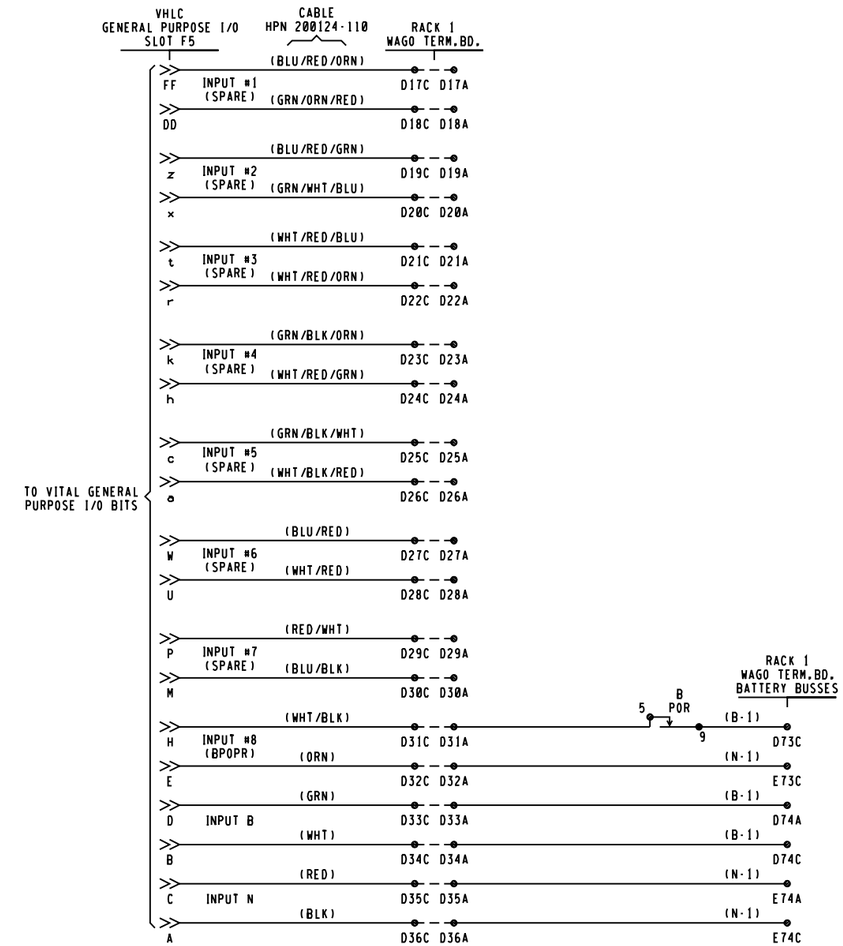

: IN

: OUT

GE TRANSPORTATION
INTELLIGENT CONTROL SYSTEMS
Jacksonville, Florida
CSX PROJ #, IL2011037 DATE, 08-25-12
DESIGNED BY, DLK CHECKED BY, FAP

VGPIO CABLE CONNECTOR

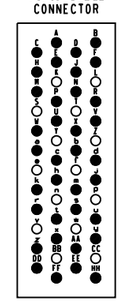

NOTES,

1. ALL WIRING #14 UNLESS NOTED OTHERWISE.

LOCATION B

REVISIONS	
05-27-03 SWE	IL2002032
09-28-11 XRL	IL2006016

CSX TRANSPORTATION
RAIL TRANSPORT GROUP ENGINEERING
COMMUNICATIONS AND SIGNALS

B.I. JUNCTION

VHLC I/O CIRCUITS
ALSIP, IL M.P. DC-15.04

DESIGNED	DIGITIZED	CHECKED	DATE
SWE/STL	SWE/WLA	SWE/MJH/JLM	10-14-02

NEXT FILE	NEXT SH	FILE	SHEET
DC01504	C24	DC01504	C23

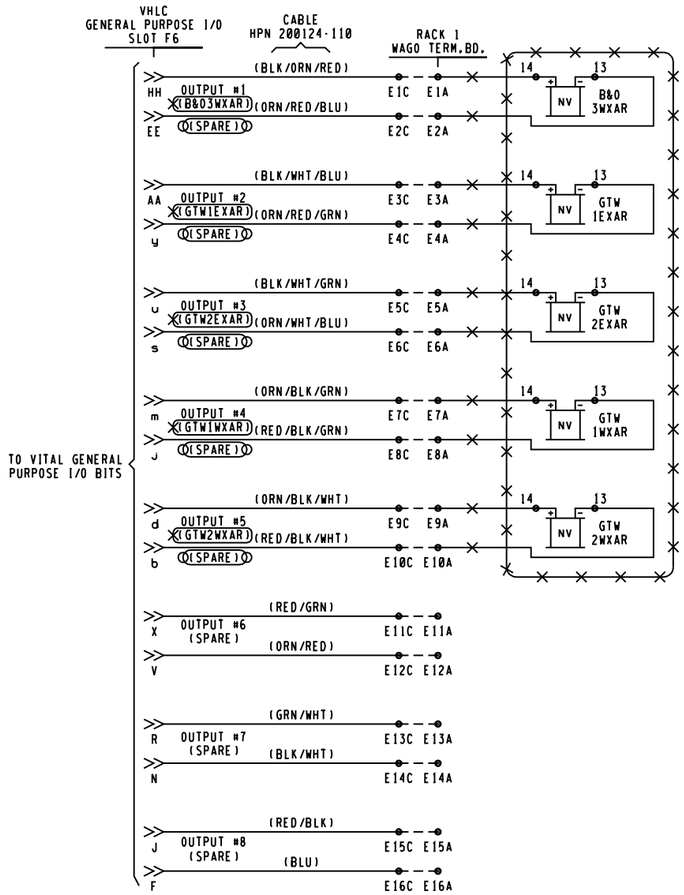

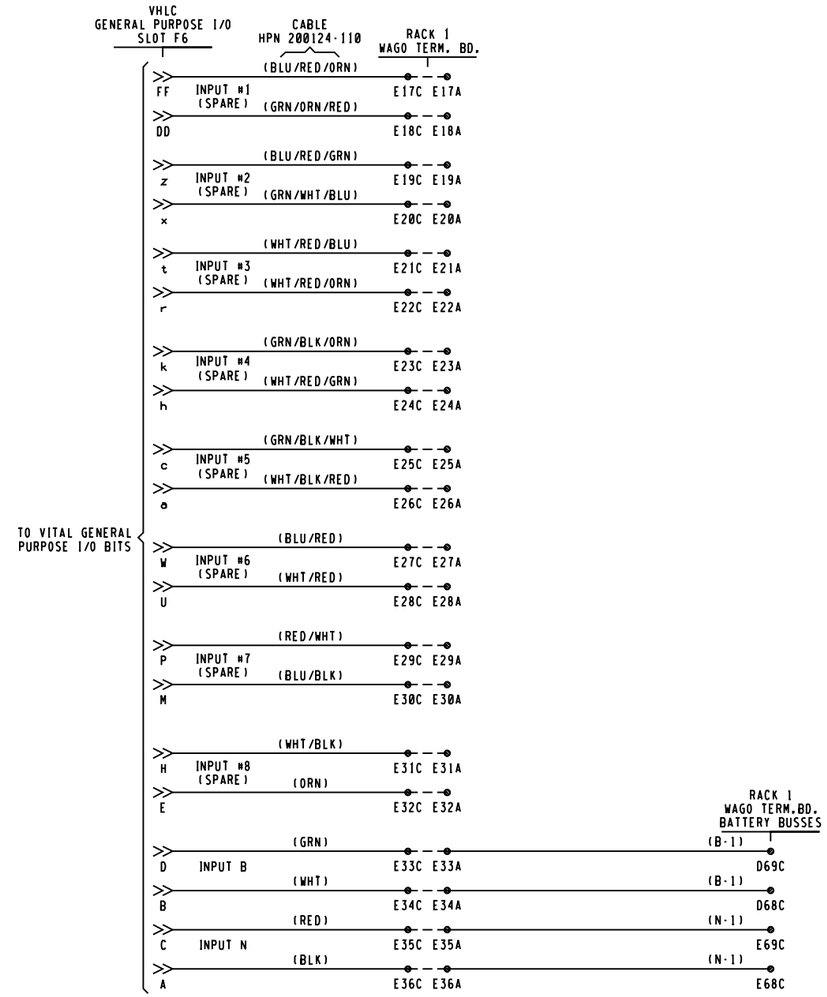

: IN
: OUT

GE TRANSPORTATION
INTELLIGENT CONTROL SYSTEMS
Jacksonville, Florida
CSX PROJ #.IL2011037 DATE.08-25-12
DESIGNED BY.DLK CHECKED BY.FAP

VGPIO CABLE
CONNECTOR

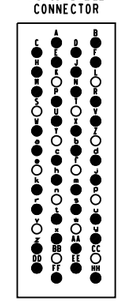

NOTES.

1. ALL WIRING #14 UNLESS NOTED OTHERWISE.

LOCATION B

REVISIONS	
05-27-03 SWE	IL2002032
09-28-11 XRL	IL2006016

CSX TRANSPORTATION
RAIL TRANSPORT GROUP ENGINEERING
COMMUNICATIONS AND SIGNALS

B.I. JUNCTION

VHLC I/O CIRCUITS
ALSIP, IL M.P. DC-15.04

DESIGNED	DIGITIZED	CHECKED	DATE
SWE/STL	SWE/WLA	SWE/MJH/JLM	10-14-02

NEXT FILE	NEXT SH	FILE	SHEET
DC01504	C25	DC01504	C24

GTW XING TOWER CASE
AT BROADWAY STREET

LOCATION B

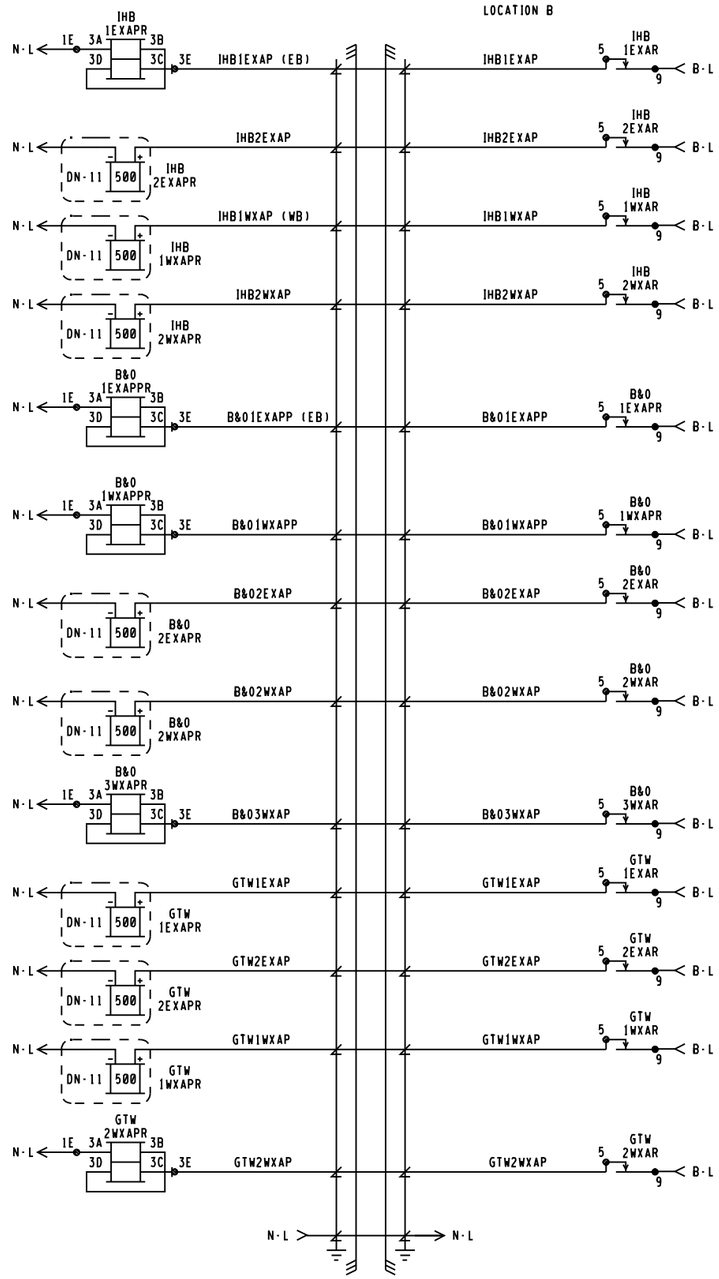

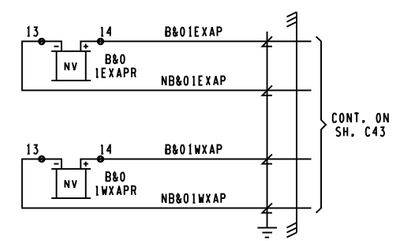

NOTE,

1. ALL WIRING #14 UNLESS NOTED OTHERWISE.

ALL OUT
VOID THIS SHEET
UPON AS-IN-SERVICE

GE TRANSPORTATION
INTELLIGENT CONTROL SYSTEMS
Jacksonville, Florida
CSX PROJ #,IL2011037 DATE,08-25-12
DESIGNED BY,DLK CHECKED BY,FAP

LOCATION B

REVISIONS	
05-27-03 SWE	IL2002032
09-28-11 XRL	IL2006016

CSX TRANSPORTATION
RAIL TRANSPORT GROUP ENGINEERING
COMMUNICATIONS AND SIGNALS

B.I. JUNCTION

G.T.W.R.R. XING CIRCUITS
ALSIP, IL M.P. DC-15.04

DESIGNED	DIGITIZED	CHECKED	DATE
SWE/STL	SWE/DI	SWE/MJH/JLM	10-14-02
NEXT FILE	NEXT SH	FILE	SHEET
DC01504	C31	DC01504	C30

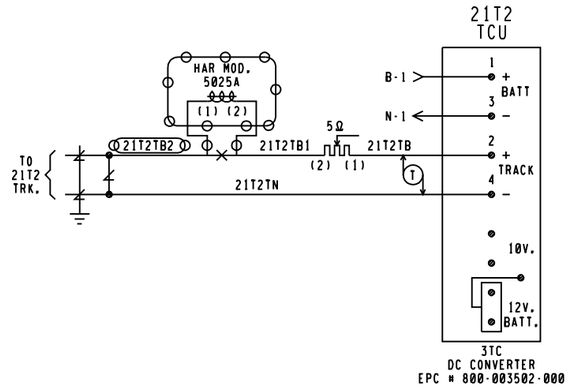

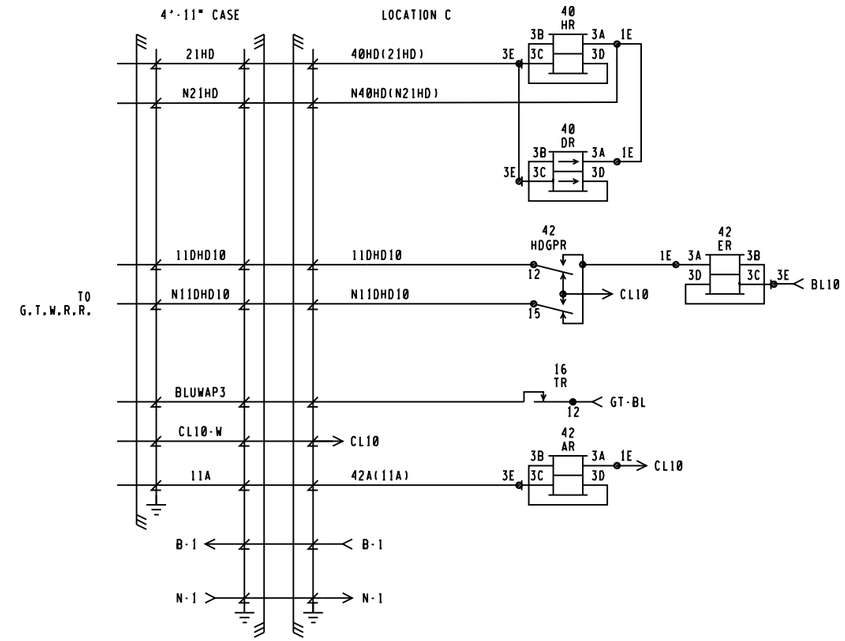

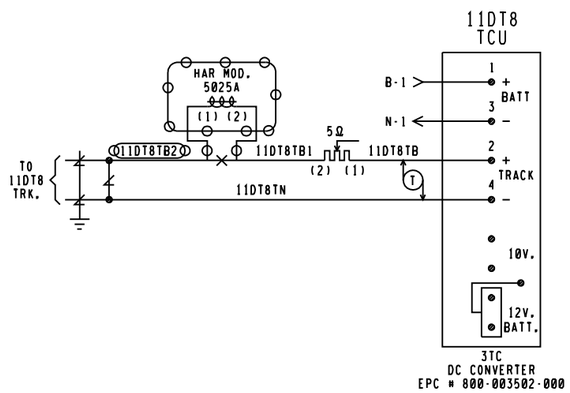

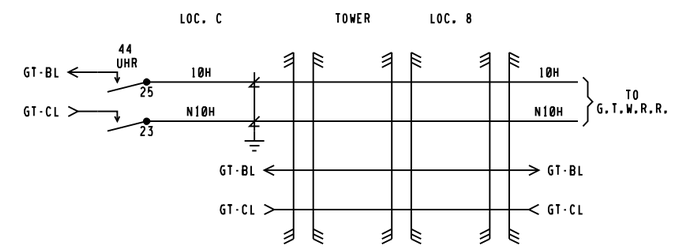

NOTE,

1. ALL WIRING #14 UNLESS NOTED OTHERWISE.

LOCATION C/4'-11" CASE

REVISIONS	
05-27-03 SWE	IL2002032
09-28-11 XRL	IL2006016

CSX TRANSPORTATION
RAIL TRANSPORT GROUP ENGINEERING
COMMUNICATIONS AND SIGNALS

B.I. JUNCTION

G.T.W.R.R. TIE-IN CIRCUITS
ALSIP, IL M.P. DC-15.04

DESIGNED	DIGITIZED	CHECKED	DATE
SWE/STL	SWE/DI	SWE/MJH/JLM	10-14-02

NEXT FILE	NEXT SH	FILE	SHEET
DC01504	C43	DC01504	C42

C41

= IN
= OUT

GE TRANSPORTATION
INTELLIGENT CONTROL SYSTEMS
Jacksonville, Florida
CSX PROJ #,IL2011037 DATE,08-25-12
DESIGNED BY,DLK CHECKED BY,FAP

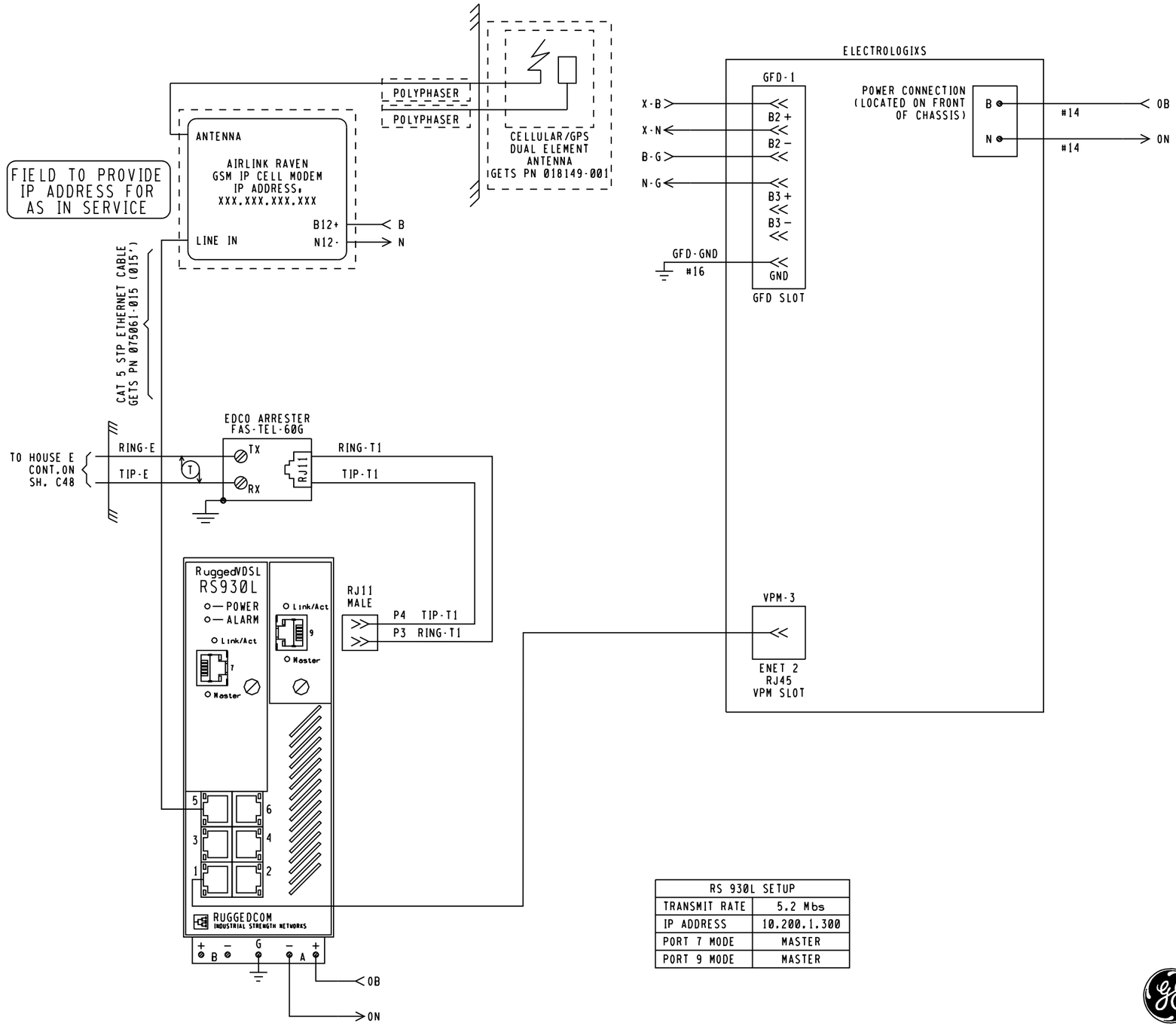

PROGRAMMING FOR DTMF RADIO

REMOTE DTMF CROSSING ACTIVATION (ACTIVATES ENTIRE CROSSING)	
TO ACTIVATE PRESS,	416#
TO DE-ACTIVATE PRESS,	416*
(ACTIVATION WILL TIME OUT AFTER 60 SEC.)	
REMOTE DTMF LIGHTING ACTIVATION (ACTIVATES FLASHING LIGHTS ONLY)	
TO ACTIVATE PRESS,	4161#
TO DE-ACTIVATE PRESS,	4161*
(ACTIVATION WILL TIME OUT AFTER 60 SEC.)	

DTMF CONTROLLER SETUP						
DTMF DIGIT SET	1	2	3	4	5	6
	×	×	×	D	D	D
TIME SET	6 (THIS EQUALS 60 SECONDS)					
RADIO CHANNEL SELECT	4 = 160.785 MHZ					

RS 930L SETUP	
TRANSMIT RATE	5.2 Mbs
IP ADDRESS	10.200.1.300
PORT 7 MODE	MASTER
PORT 9 MODE	MASTER

NOTES,

1. THE GROUND CONNECTION MAY BE ATTACHED TO TERMINALS 1, 10 OR BOTH.
2. (- - -) = SUPPLIED BY CSX COMMUNICATIONS.
3. ALL WIRING IN SHEET TO BE #6 UNLESS OTHERWISE NOTED.

FIELD SET
03/19/13

NEW WORK

GE TRANSPORTATION
INTELLIGENT CONTROL SYSTEMS
Jacksonville, Florida
CSX PROJ #,IL2011037A DATE,01-29-13
DESIGNED BY,SAT CHECKED BY,DPL

LOCATION D CROSSING (10-1CWU)

CSX TRANSPORTATION
RAIL TRANSPORT GROUP ENGINEERING
COMMUNICATIONS AND SIGNALS

B.I. JUNCTION
BROADWAY ST. (163416P)
10-1CWU ELECTROLOGIXS CIRCUITS
ALSIP, IL M.P. DC-15.04

DESIGNED	DIGITIZED	CHECKED	DATE
GET/DLK	GET/SAT	GET/FAP	08-25-12

DESIGN DATE	REV. NO.	DRAWING	SHEET NO	FILE	SHEET
08-25-12	3	-----	-----	DC01504	C42 (X)